Geo

1993

TRACKER

SERVICE MANUAL

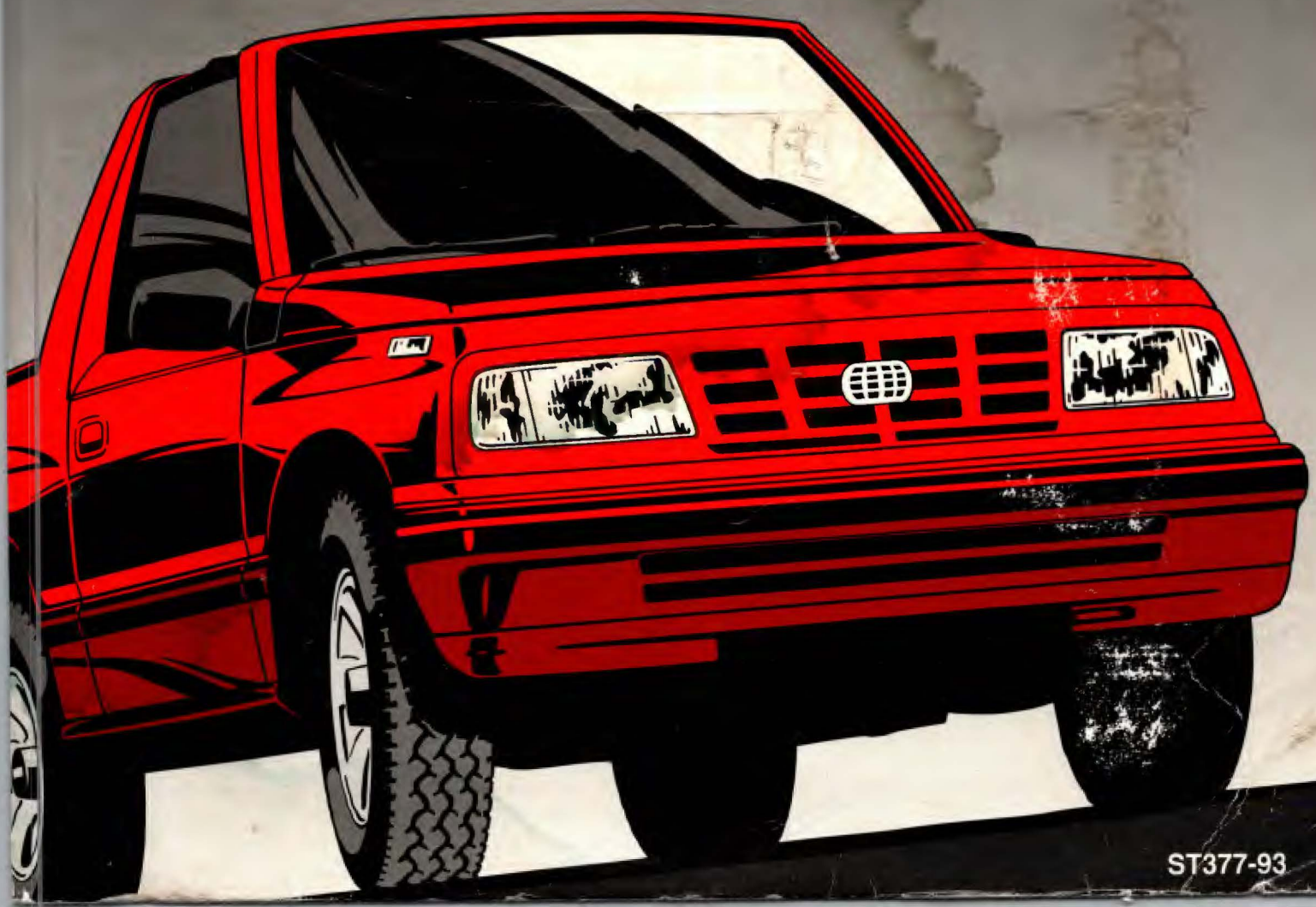

ST377-93

CAUTION

To reduce the chance of personal injury and/or property damage, the following instructions must be carefully observed:

Proper service and repair are important to the safety of the service technician and the safe, reliable operation of all motor vehicles. If part replacement is necessary, the part must be replaced with one of the same part number or with an equivalent part. Do not use a replacement part of lesser quality.

The service procedures recommended and described in this service manual are effective methods of performing service and repair. Some of these procedures require the use of tools specifically designed for the purpose.

Accordingly, anyone who intends to use a replacement part, service procedure or tool, which is not recommended by the vehicle manufacturer, must first determine that neither his safety nor the safe operation of the vehicle will be jeopardized by the replacement part, service procedure or tool selected.

It is important to note that this manual contains various CAUTIONS and NOTICES that must be carefully observed in order to reduce the risk of personal injury during service or repair, or the possibility that improper service or repair may damage the vehicle or render it unsafe. It is also important to understand that these CAUTIONS and NOTICES are not exhaustive, because it is impossible to warn of all the possible hazardous consequences that might result from failure to follow these instructions.

Chevrolet Motor Division service manuals are intended for use by professional, qualified technicians. Attempting repairs or service without the appropriate training, tools and equipment could cause injury to you or others and damage to your vehicle that may cause it not to operate properly.

1993 Geo TRACKER SERVICE MANUAL

FOREWORD

This manual provides information on diagnosis, service procedures, adjustments, and specifications for the 1993 Geo Tracker.

An understanding of the material contained in this manual and in the appropriate Dealer Service Bulletins will help technicians to better service vehicle owners.

When reference is made in this manual to a brand name, number, or specific tool, an equivalent product may be used in place of the recommended item.

All information, illustrations, and specifications contained in this literature are based on the latest product information available at the time of publication approval. The right is reserved to make changes at anytime without notice.

NOTICE: When fasteners are removed, always reinstall them at the same location from which they were removed. If a fastener needs to be replaced, use the correct part number fastener for that application. If the correct part number fastener is not available, a fastener of equal size and strength (or stronger) may be used. Fasteners that are not reused, and those requiring thread-locking compound, will be called out. The correct torque values must be used when installing fasteners that require them. If the above procedures are not followed, parts or system damage could result.

TABLE OF CONTENTS

SECTION NO.	SUBJECT
0	GENERAL INFORMATION
1	HEATING AND AIR CONDITIONING
3	STEERING, SUSPENSION, TIRES AND WHEELS
4	DRIVE AXLES
5	BRAKES
6	ENGINE
7	TRANSMISSIONS
8	BODY AND CHASSIS ELECTRICAL
9	ACCESSORIES
10	BODY
	INDEX

A detailed section list is printed on the following page.

CHEVROLET-PONTIAC-CANADA GROUP
General Motors Corporation
WARREN, MICHIGAN

© 1992 GENERAL MOTORS CORPORATION ALL RIGHTS RESERVED 7-92 LITHO IN U.S.A.
No part of this publication may be reproduced, stored in any retrieval system or transmitted in any form or by any means, including but not limited to electronic, mechanical, photocopying, recording, or otherwise, without the prior written permission of General Motors Corp. This includes all text, illustrations, tables, and charts.

ST377-93

TABLE OF CONTENTS	SECTION
GENERAL INFORMATION	**0**
General Information	0A
Maintenance and Lubrication	0B
Vibration Diagnosis	0C
HEATING AND AIR CONDITIONING	**1**
Heater and Ventilation	1A
Air Conditioning	1B
Air Conditioning Compressor Service	1D
STEERING, SUSPENSION, TIRES AND WHEELS	**3**
Steering, Suspension, Tires and Wheels Diagnosis	3
Wheel Alignment	3A
Power Steering Gear and Pump	3B1
Manual Steering Gear	3B2
Front Suspension	3C
Rear Suspension	3D
Tires and Wheels	3E
Standard Steering Wheel and Column	3F1
Tilt Steering Wheel and Column	3F2
DRIVE AXLES	**4**
Propeller Shaft	4A
Rear Axle	4B
Front Axle	4C
BRAKES	**5**
Brakes	5
Master Cylinder	5A
Front Disc Brakes	5B1
Leading/Trailing Drum Brakes	5C1
Vacuum Booster System	5D1
Rear Wheel Antilock (RWAL) Brake System	5E
Rear Wheel Antilock (RWAL) Brake System Diagnosis	5E3
Parking Brake	SF
ENGINE	**6**
Engine General Information and Mechanical Diagnosis	6
Engine Mechanical	6A1
Cooling and Radiator	6B
Engine Fuel	6C
Engine Electrical	6D
Battery	6D1
Cranking System	6D2
Charging System	6D3
Ignition System	6D4
Engine Wiring	6D5
Driveability and Emissions General Information	6E
Driveability and Emissions Fuel Injection (TBI)	6E2
Exhaust System	6F
TRANSMISSIONS	**7**
Automatic Transmission On-Vehicle Service	7A
3L30 Automatic Transmission Diagnosis	7A-11A
3L30 Automatic Transmission Unit Repair	7A-11B
Manual Transmission	7B
2WD Manual Transmission Unit Repair	7B-10
4WD Manual Transmission Unit Repair	7B-11
Clutch	7C
Transfer Case	7D
BODY AND CHASSIS ELECTRICAL	**8**
Electrical Diagnosis	8A
Lighting Systems and Horn	8B
Instrument Panel, Gages and Console	8C
Windshield Wiper/Washer System	8E
ACCESSORIES	**9**
Audio Systems	9A
BODY	**10**
General Body Service	10-1
Stationary Windows	10-2
Underbody	10-3
Bumpers	10-4
Body Front End	10-5
Doors	10-6
Rear Quarters	10-7
Body Rear End	10-8
Roof and Folding Top	10-9
Seats	10-10
Seat Belts	10-11
INDEX	

1993 SERVICE MANUAL COMMENT FORM *

Use this form to advise us of any errors you might find in this manual. We also welcome suggestions for improving the Service Manuals.

Service Manual(s) that have the error _____

Page number(s) that have the error _____

Figure number(s) that have the error _____

VIN (if available) or model and applicable options _____

Describe in detail, the error found or the suggestion(s). Attach additional pages if necessary.

_____

_____

_____

_____

_____

_____

_____

_____

_____

_____

_____

_____

_____

_____

_____

_____

From: Dealer Firm Name _____ Dealer Code _____ – _____

City/Town _____ State _____ Zip Code _____

Name of Person Submitting This Comment Form _____

Signature _____ Date _____ Phone ( ) _____ – _____

Mail To: Service Technology Group
Service Information Production
(G30 – 5)
C.C.O. Building
30007 Van Dyke Ave.
Warren, Mi. 48090

* Additional comment forms at back of manual.

SECTION 0

General Information

CONTENTS

General Information 0A-1
Maintenance and Lubrication 0B-1
Vibration Diagnosis 0C-1

Geo

SECTION 0A

GENERAL INFORMATION

CONTENTS

When to Disconnect the Negative (-) Battery Cable 0A-1
Handling Electrostatic Discharge (ESD) Sensitive Parts 0A-1
Special Tool Ordering Information 0A-2
Federal Vehicle Theft Prevention Standard 0A-2
Vehicle Identification Number (VIN) 0A-2
Model Identification 0A-4
Engine Identification 0A-4
Transmission Model Identification 0A-5
Transmission Usage 0A-5
General Vehicle Lifting and Jacking 0A-5
Disabled Vehicle Towing 0A-7
Lock Cylinder Coding 0A-9
Key Identification and Usage 0A-9
Cutting Keys 0A-9
Replacement Lock Cylinders 0A-9
Assembling and Coding Lock Cylinders 0A-9
Metric Fasteners 0A-9
Fastener Strength Identification 0A-10
Prevailing Torque Fasteners 0A-13
Metric English Conversion Table 0A-14
Decimal and Metric Equivalents 0A-14
Standard Nomenclature for Certain Electronic Components and Systems 0A-16
Abbreviations Charts 0A-16
Replacement Labels 0A-22
Service Parts Identification Label 0A-22
Options and Process Codes 0A-23
Service Parts Information 0A-24

WHEN TO DISCONNECT THE NEGATIVE (-) BATTERY CABLE

CAUTION: Before removing or installing any electrical unit or when a tool comes in contact with "live" exposed electrical terminals, disconnect the negative battery cable to help prevent personal injury and/or damage to the vehicle or components. Unless instructed otherwise, the ignition switch must be in the "LOCK" position.

HANDLING ELECTROSTATIC DISCHARGE (ESD) SENSITIVE PARTS

Figure 1

Many solid-state electrical components can be damaged by electrostatic discharge (ESD). Some will display an ESD sensitive label (Figure 1), but many will not.

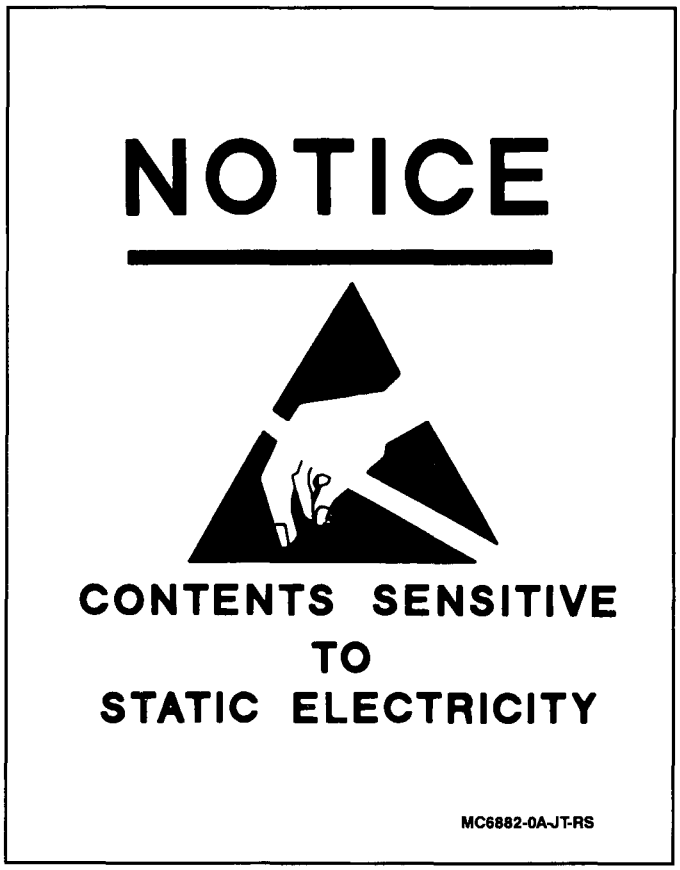

Figure 1 Electrostatic Discharge Sensitive Parts Label

NOTICE: In order to avoid possible damage to any components, observe the following:

1. Body movement produces an electrostatic charge. To discharge personal static electricity, touch a ground point (metal) on the vehicle. This should be done any time you:
   - Slide across the vehicle seat.
   - Sit down or stand up.
   - Do any walking.
2. Do not touch exposed electric terminals, components or connectors with your fingers or any tools. When using a screwdriver or similar tool to disconnect a connector, never let the tool come in contact with, or come between the exposed terminals.
3. Never jumper, ground or use test equipment probes on any electrical components or connectors unless directed to do so in diagnosis. When using test equipment, always connect the ground lead first.
4. Do not remove the solid state component from its protective packaging until you are ready to install the part.
5. Always touch the solid state component's package to a ground before opening. Solid state components can also be damaged if:
   - They are bumped or dropped.
   - They are laid on any metal work benches or on components that operate electrically, such as a radio, TV or oscilloscope.

SPECIAL TOOL ORDERING INFORMATION

Special service tools that are shown in this service manual that have tool product numbers beginning with "J" or "BT" are available for worldwide distribution from:

Kent-Moore
SPX Corporation
29784 Little Mack
Roseville, MI 48066-2298
1-800-345-2233
Mon.-Fri. 8:00 A.M. - 8:00 P.M. EST
Telex:244040 KMTR VR
FAX: 313-578-7375

General Motors dealers can purchase TECH 1 scan tools and accessories through Kent-Moore at the above address and phone number. Non-General Motors dealer repair facilities can purchase TECH 1 scan tools and accessories from Kent-Moore at the above address or:

SUN Electric Corporation
One Sun Parkway
Crystal Lake, IL 60014
1-800-CALLSUN (255-5786)
6:45 A.M. - 7:00 P.M. CST

FEDERAL VEHICLE THEFT PREVENTION STANDARD

Federal law requires General Motors to label certain parts, on selected vehicles, with the vehicle identification number (VIN). This standard is intended to reduce the cases of motor vehicle thefts by assisting in the tracing and recovery of parts from stolen vehicles.

The label will be permanently affixed to an interior surface of the part and will contain the complete VIN. The label on replacement parts will contain the letter R, the manufacturer's logo, and the symbol "DOT."

Important

- THEFT DETERRENT LABELS ARE NOT TO BE DEFACED, REMOVED OR COVERED OVER. The labels must be shielded from paint, rustproofing and undercoating (dealer preparation included).

  NOTICE: The theft deterrent label found on some major sheet metal, engines and transaxles must be masked prior to painting, rustproofing, undercoating, etc. The mask must be removed following the above operations. Failure to keep the label clean and readable may result in liability for violation of the Federal Vehicle Theft Prevention Standard.

  The parts involved are:
  - Front and rear bumper assemblies.
  - Hood.
  - Right and left doors. (The certification label on the driver's door qualifies as a theft prevention label.)
  - Right and left quarter panel assemblies.
  - Rear door.
  - Right and left front fenders.

VEHICLE IDENTIFICATION NUMBER (VIN)

Figures 2 and 3

The vehicle identification number (VIN) legally identifies the vehicle. The VIN plate is located on the left side of the instrument panel, facing the door (Figure 2).

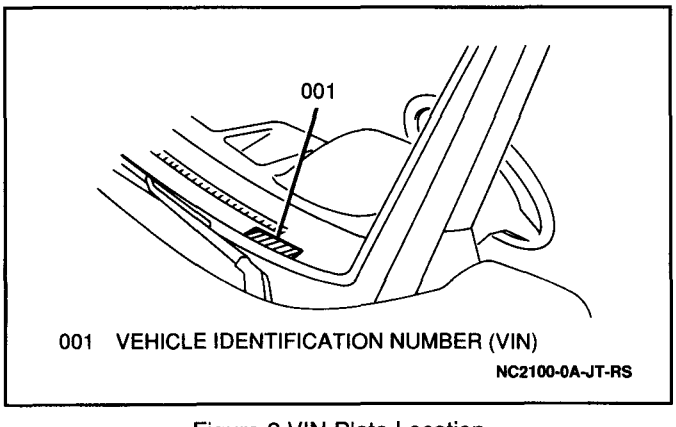

Figure 2 VIN Plate Location

The VIN plate consists of 17 characters (codes). Figure 3 gives detailed vehicle information for each character (code).

VEHICLE IDENTIFICATION NUMBER

2 C N B J 1 8 U 4 P 6 900001

NATION OF ORIGIN
2 CANADA

MANUFACTURER
C SUZUKI

MAKE AND TYPE
N MULTIPURPOSE PASS VEHICLE

CODE	GVWR (IN POUNDS)	BRAKE SYSTEM
B	3001-4000	HYDRAULIC ONLY

LINE AND CHASSIS TYPE			
CODE	LINE	MODELS	CHASSIS TYPE
E	COMPACT CAB	(J)	4x2
J	COMPACT CAB	(J)	4x4

TRUCK SERIES
1 ½ TON

PLANT SEQUENTIAL NUMBER

CODE	ASSEMBLY PLANT
6	INGERSOLL, ONT

MODEL	YEAR
P	1993

CHECK DIGIT

ENGINE TYPE AND MAKE		
CODE	TYPE DISPLACEMENT LITERS (CU.IN.)	MAKE (GM) ENGINE SOURCE
U	1.6 (97.0 CID) L4 TBI	SUZUKI

TRUCK BODY TYPE	
8	JIMMY/TRACKER

PC9101-0A-JT-RS

Figure 3 Vehicle Identification Number

MODEL IDENTIFICATION

Figure 3

Figure 3 provides detailed VIN code information for the model, body type, vehicle line and chassis type for the current year.

ENGINE IDENTIFICATION

Figures 3 and 4

For detailed engine information, refer to the engine letter code located in the eighth position of the VIN (Figure 3).

Stick-on labels attached to the engine indicate the engine unit number and code. This label also contains bar codes for in-plant identification.

All engines are stamped with an engine identification serial number which identifies the assembly plant, the month and the day produced, and the engine type code. For the location of the engine identification number, refer to Figure 4.

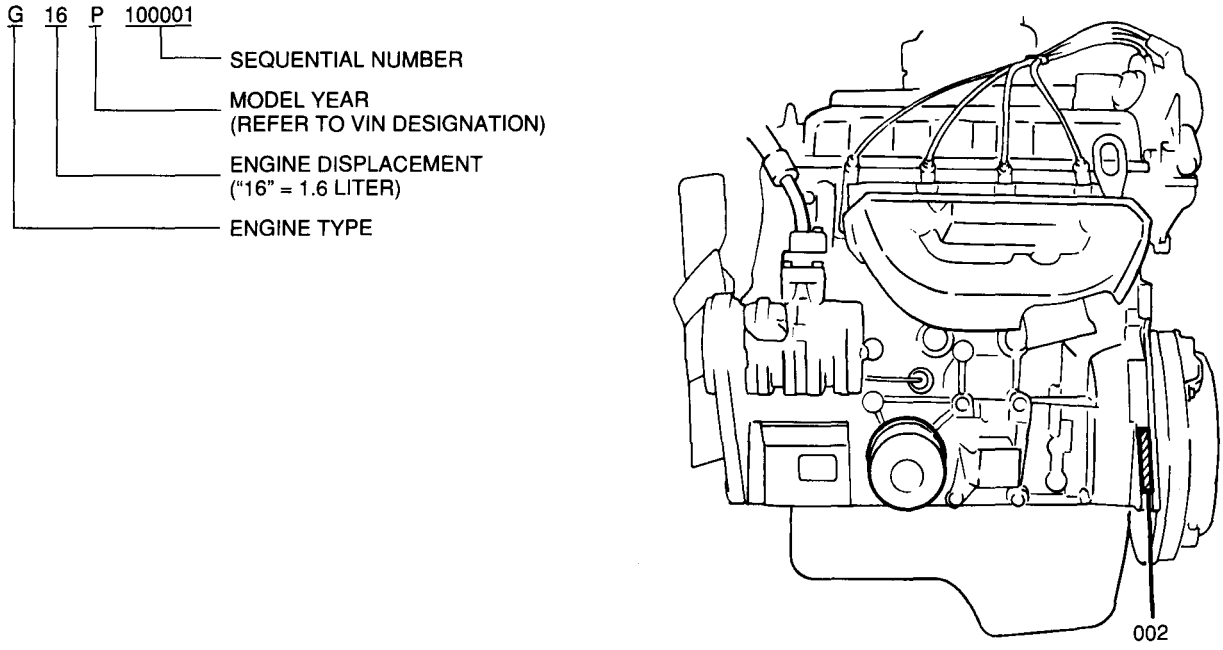

002 ENGINE IDENTIFICATION NUMBER

PC2102-0A-JT-RS

Figure 4 Engine Identification Number Location

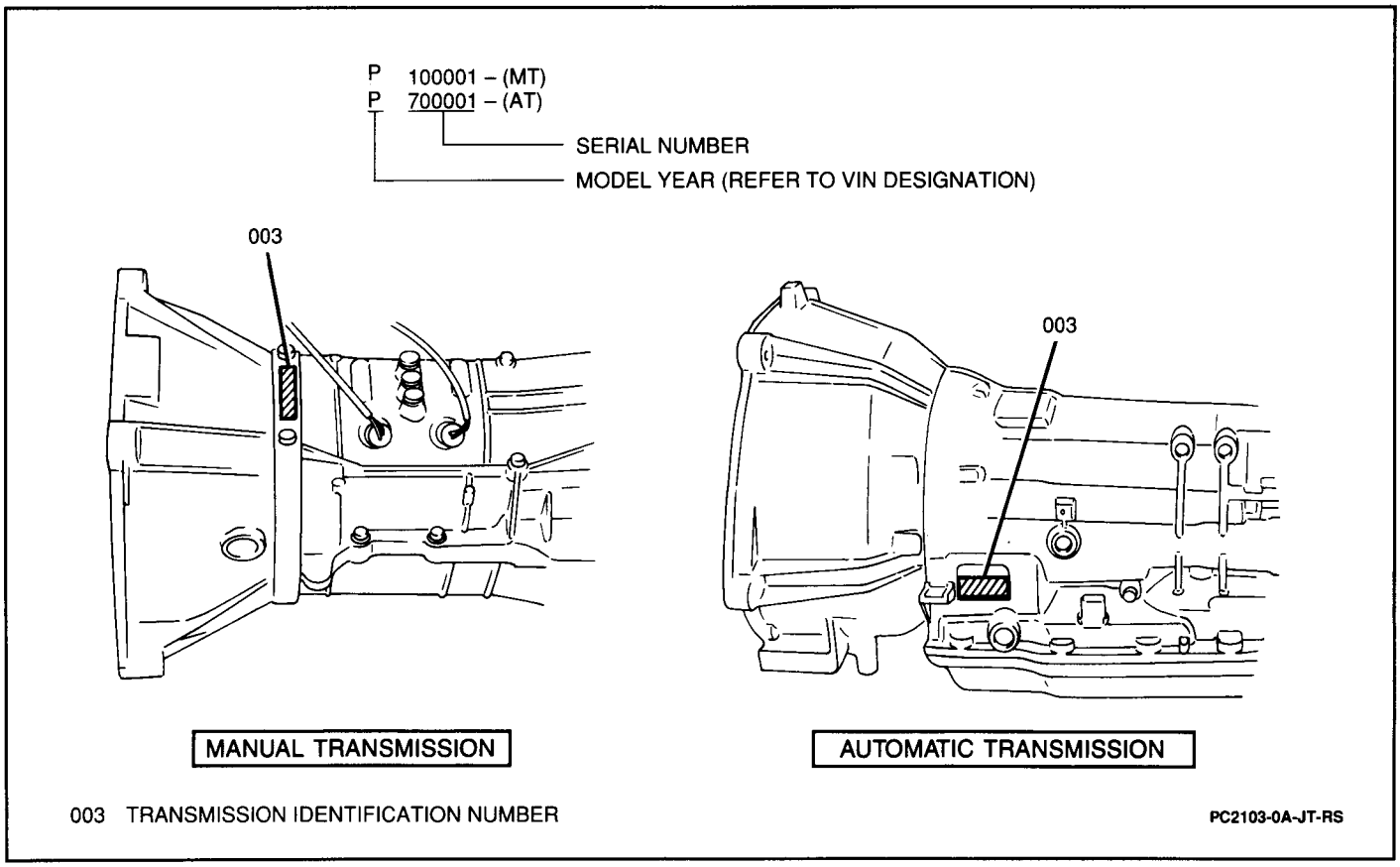

Figure 5 Transmission Identification Number Location

TRANSMISSION MODEL IDENTIFICATION

Figure 5

The transmission identification number is stamped on top of the transmission case. For the location of the transmission identification number on the automatic and the manual transmission, refer to Figure 5.

TRANSMISSION USAGE

Two types of transmissions are available, the 5-speed manual transmission, RPO MM5, and the 3-speed automatic, RPO MX1.

Differential ratio depends on the transmission application. The 1.6L SOHC 4-cylinder single-point TBI engine, RPO LS5, combined with the 5-speed manual transmission has a 5.125 differential ratio. The 1.6L engine combined with the 3-speed automatic has a 4.625 differential ratio.

GENERAL VEHICLE LIFTING AND JACKING

Figures 6 through 10

For lifting a vehicle with equipment other than the original equipment jack, various lift points have been established and are recommended (Figures 6, 7 and 8).

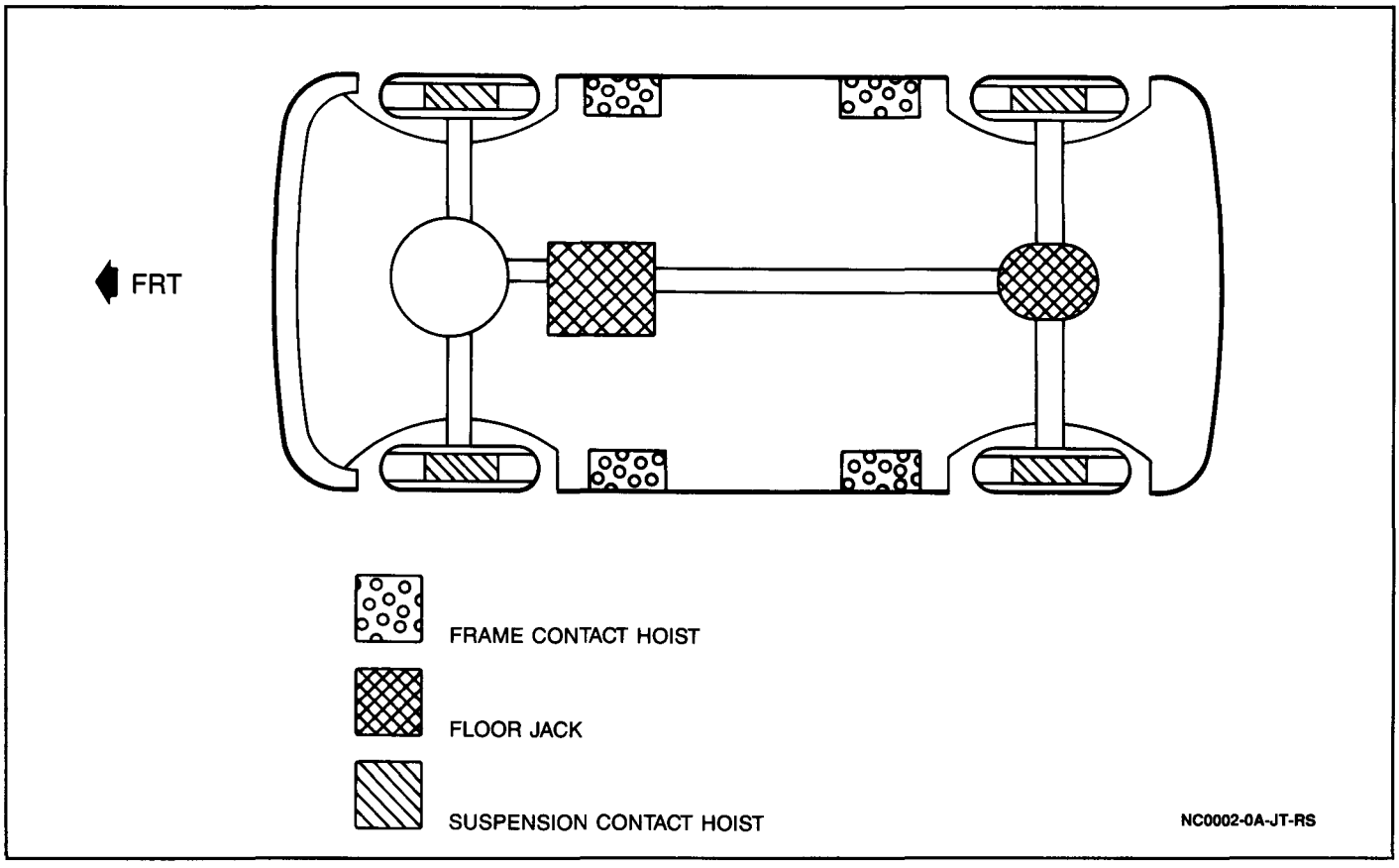

Figure 6 Vehicle Lifting and Jacking Points

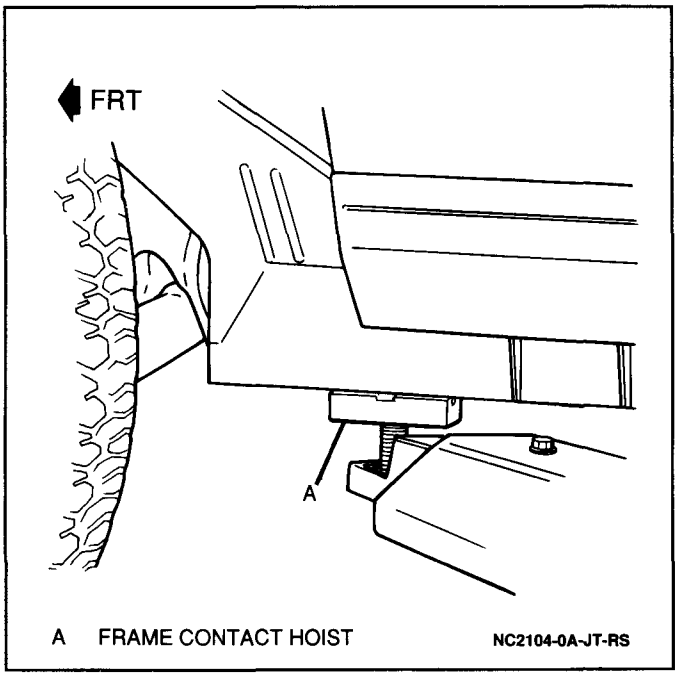

Figure 7 Front Hoist Support Location

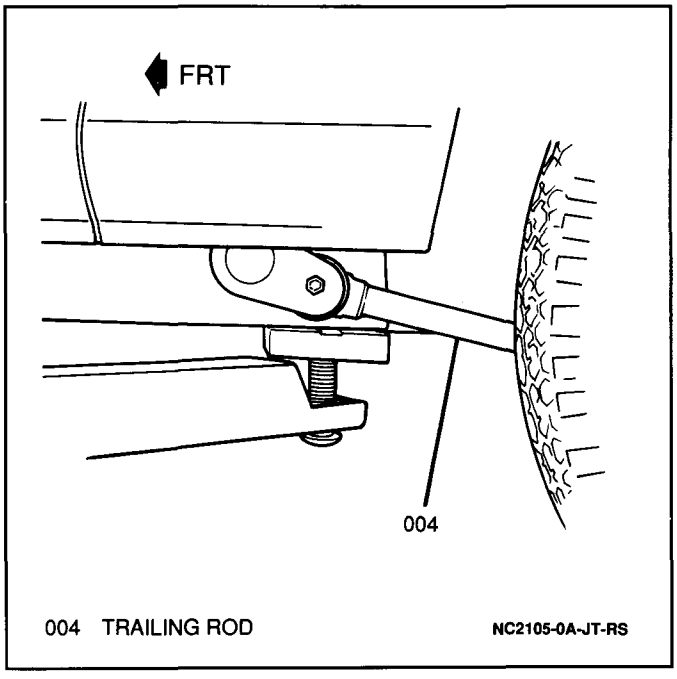

Figure 8 Rear Hoist Support Location

CAUTION: To help avoid personal injury when a vehicle is on a hoist, provide additional support for the vehicle at the opposite end from which components are being removed. This will reduce the possibility of the vehicle falling off the hoist.

NOTICE: When jacking or lifting a vehicle at the frame side rails or other prescribed lift points, be certain that the lift pads do not contact the brake pipes, brake cables, three way catalytic converter (TWC), fuel pipes or the fuel hoses. Damage to these components could result if contact is made with the lift pads.

When a vehicle is lifted with the original vehicle jack or a floor jack, the wheels at the opposite end should be blocked. Lift points have been established when using the original vehicle jack or a floor jack (Figures 9 and 10). Jackstands should be used to provide additional support. When supporting the vehicle with jackstands, the jackstands should be placed under the frame at the area indicated for frame jacking or hoisting.

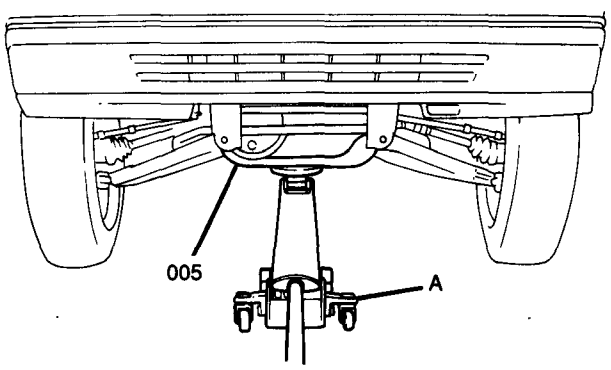

A FLOOR JACK
005 FRONT CROSSMEMBER NC2106-0A-JT-RS

Figure 9 Front Floor Jack Support Location

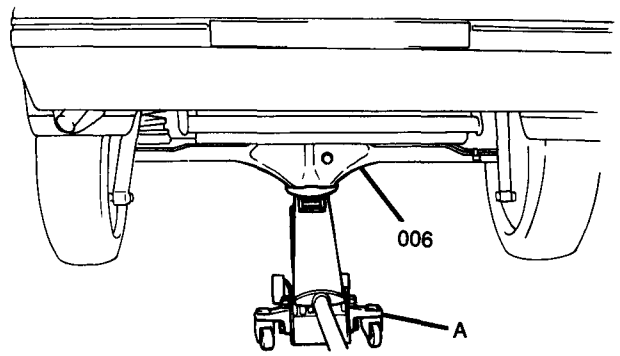

A FLOOR JACK
006 REAR AXLE HOUSING NC2107-0A-JT-RS

Figure 10 Rear Crossmember Lifting Point

DISABLED VEHICLE TOWING

Figures 11 through 13

CAUTION: To help avoid personal injury, vehicle damage or property damage:

- **Never let passengers ride in the vehicle that is being towed.**
- **Never tow faster than safe or posted speeds.**
- **Any loose or protruding parts such as hoods, doors, fenders, trim, etc., should be secured prior to towing.**
- **Never rock or pivot a disabled vehicle supported on jack stands even to help place the dolly under the vehicle.**
- **Never go under a vehicle while it is lifted by the towing equipment unless it is also supported on jack stands.**
- **Always use separate safety chains on each side of the vehicle when towing.**

When towing the vehicle, have the ignition switch turned to the "ACC" position. The steering wheel should be clamped in a straight-ahead position with a clamping device designed for towing service. Do not use the vehicle's steering column lock for this. The transmission and transfer case, if equipped, should be in "N" (neutral), the manual locking front wheel hubs must be in the "FREE" position and the parking brake released. Turn on hazard lights before towing.

When Towing from the Front:

1. Attach "J" hooks to the rear of the lower control arm inboard of the springs.
2. Position a 4x4 wood beam across sling chains and against lower control arm front attachment brackets (Figure 11).

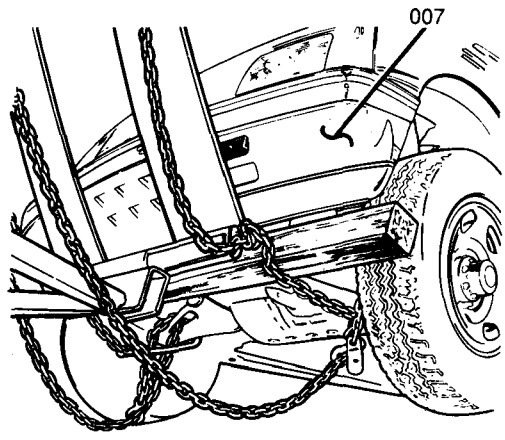

007 FRONT BUMPER NC2108-0A-JT-RS

Figure 11 Front Towing Hook-Up

3. Position the lower sling crossbar in front of and against the 4x4 wood beam.
4. Attach separate safety chains around the outboard end of each lower control arm.

Do not tow the vehicle on the rear wheels unless it is necessary. If the vehicle must be towed on the rear wheels, do not exceed a speed of 56 km/h (35 mph) or a distance of 80 km (50 miles) in order to avoid transmission damage. If these limits must be exceeded, then the rear wheels must be supported on dollies. If the vehicle has the four-wheel drive option, a dolly must be used under the rear wheels when towing from the front.

NOTICE: LSi models require dollies under the rear wheels or vehicle damage will occur.

When Towing from the Rear:

1. Attach "J" hooks around the axle tube.

   NOTICE: When attaching the "J" hooks take care not to damage the brake pipes on the axle tubes.

2. Position the sling crossbar under and forward of the rear bumper (Figure 12).

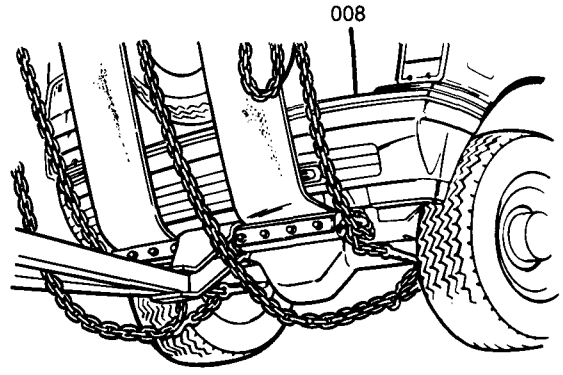

008 REAR BUMPER NC2109-0A-JT-RS

Figure 12 Rear Towing Hook-Up

3. Attach separate safety chains around the outboard end of each side of the rear axle.
4. When towing from the rear do not exceed a speed of 88 km/h (55 mph) or a distance of 800 km (500 miles).

   CAUTION: A vehicle can fall from a car-carrier if it is not properly secured. This can cause a collision, serious personal injury and vehicle damage. The vehicle should be tightly secured before it is towed. Use chains or steel cables to secure the vehicle. Never use substitutes such as ropes, leather straps, canvas webbing, etc. that can be cut by sharp edges underneath the towed vehicle.

Frame loops are provided at the front and rear of the vehicle (Figure 13). Their intended use is to help pull the vehicle out if it is stuck off-road. They are NOT intended for towing the vehicle.

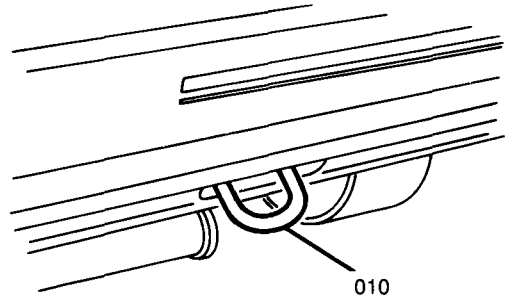

010 FRAME LOOP NC2110-0A-JT-RS

Figure 13 Frame Loop

LOCK CYLINDER CODING

Key Identification and Usage

Figures 14 and 15

One key is used for the ignition, doors and the back door. The key is cut on both edges, making it reversible.

Key identification is obtained from the five-digit character code stamped on the key code tag (Figure 14). With this information, the key code cutting combination can be determined from a code list (available to owners of key cutting equipment from suppliers).

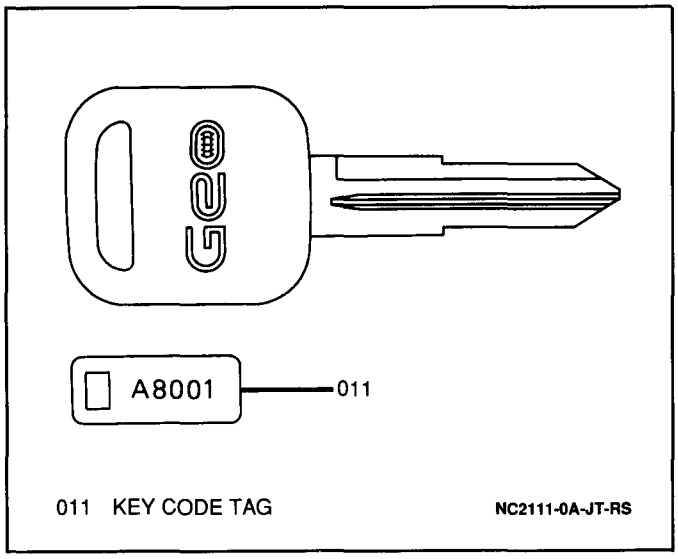

Figure 14 Key Code Tag

If key codes are not available from records or tags, the key code can be obtained from the right-side door lock cylinder (if lock has not been replaced). Lock cylinders supplied by the factory as service parts are unmarked. If the original key is available, the key code cutting combination can be determined by laying the key on the key code diagram (Figure 15).

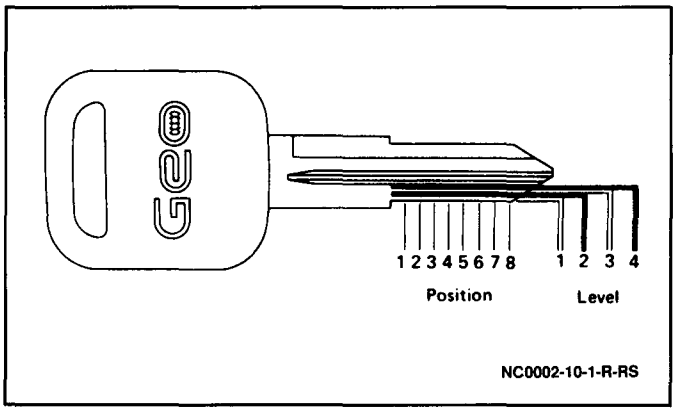

Figure 15 Key Code Diagram

Cutting Keys

Figure 15

- Determine special code from the code list or the key code diagram (Figure 15).
- Cut a blank key to the proper level for eight tumbler position.
- Check key operation in the lock cylinder.

Replacement Lock Cylinders

Replacement lock cylinders are available from GM SPO as a complete assembly with key. Tumblers are not available as service parts. If repairs to the tumbler are needed, replace it with a new lock cylinder and key.

Assembling and Coding Lock Cylinders

No internal parts for the lock cylinders of this vehicle are available. The lock is serviced as a unit; there are no assembly or coding procedures.

METRIC FASTENERS

Figure 16

NOTICE: When fasteners are removed, always reinstall them at the same location from which they were removed. If a fastener needs to be replaced, use the correct part number fastener for that application. If the correct part number fastener is not available, a fastener of equal size and strength (or stronger) may be used. Fasteners that are not reused, and those requiring thread-locking compound, will be called out. The correct torque values must be used when installing fasteners that require them. If the above procedures are not followed, parts or system damage could result.

Current model GM vehicles are primarily dimensioned in the metric system. Most fasteners are metric and are very close in dimension to well-known customary fasteners in the English system. It is important that replacement fasteners be of the correct nominal diameter, thread pitch and strength.

Original equipment metric fasteners (except "beauty" bolts, such as exposed bumper bolts, and cross-recess head screws) are identified by a number marking which indicates the strength of the material in the fastener (as outlined below). Metric cross-recess screws are identified by a Posidriv or Type 1A cross-recess. Either a cross-recess head or Type 1A cross-recess screwdriver can be used in Posidriv heads, but a Type 1A cross-recess will perform better.

NOTICE: Most metric fasteners have a blue color coating. This coating should not be used to positively identify fasteners because not all metric fasteners are color-coated. Damage to the fastener or part could result if a customary fastener is incorrectly used to replace a metric fastener.

General Motors Engineering Standards, along with other North American industries, have adopted a portion of the standard metric fastener sizes defined by ISO (International Standard Organization). This was done to reduce the number of fastener sizes used while retaining the best strength qualities of each thread size.

For example, the customary 1/4-20 and 1/4-28 screws were replaced by the metric M6.0x1 screw, which has nearly the same diameter. The thread pitch, 25.4 threads per inch, is in between customary coarse and fine thread pitches. Metric and customary thread notations differ slightly. The thread major diameter of a 1/4-20 bolt is 1/4-inch, and the bolt has 20 threads per inch. The thread major diameter of an M6.0x1 bolt is 6.0 mm, and the distance between threads is 1 mm (Figure 16).

FASTENER STRENGTH IDENTIFICATION

Figures 17 and 18

The most commonly used metric fastener strength property classes are 9.8 and 10.9, with the class identification embossed on the head of each bolt. Some metric nuts will be marked with a single digit strength identification number on the nut face (Figure 17).

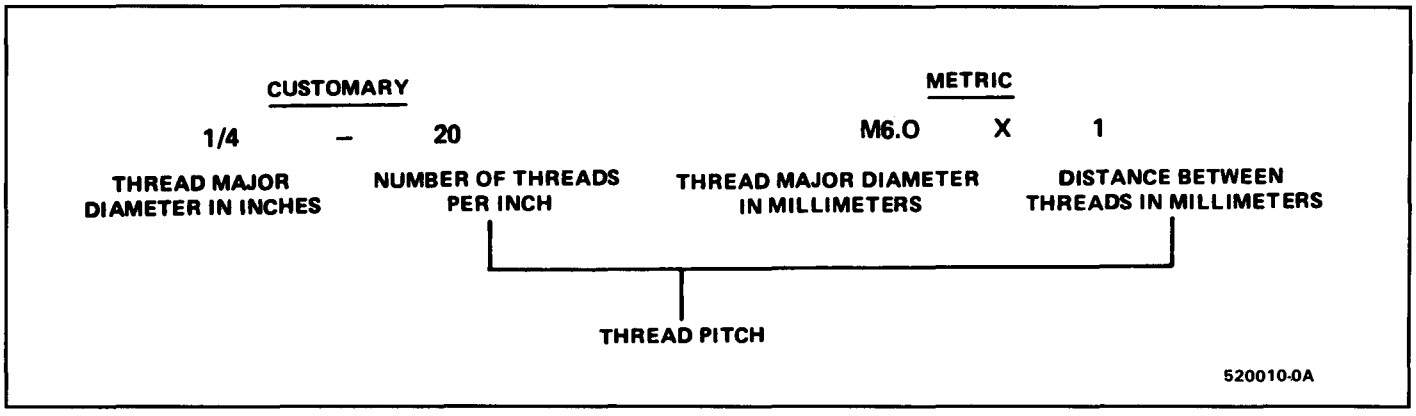

Figure 16 Thread Notation

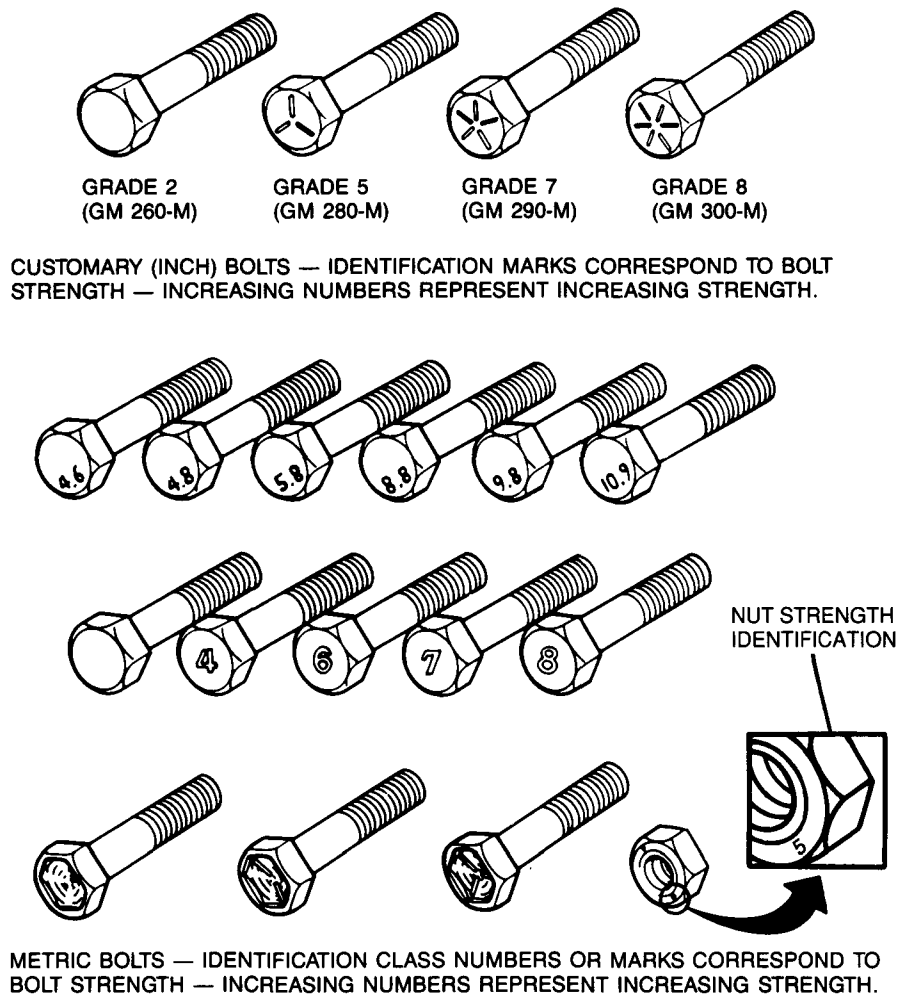

Figure 17 Fastener Strength Markings

Customary (inch) strength classes range from 2 (low strength) to 8 (high strength). A grade-2 bolt has no lines embossed on the bolt head. One radial line is embossed on the bolt head for each strength grade above 2. That is, a bolt with one embossed line is grade-3, two embossed lines is grade-4 and so on. Six embossed lines signify grade-8, the highest-grade bolt (Figure 17).

When replacing metric fasteners, bolts and nuts of the same strength or greater than the original (the same number marking or higher) should be used. It is likewise important to select replacement fasteners of the correct size. Correct replacement bolts and nuts are available through GM SPO.

Many metric fasteners available in the after-market parts channels are designed to metric standards of countries other than the United States and may be of different thread pitch. The metric fasteners used on GM products are designed to new, international standards that may not yet be manufactured by some non-domestic bolt and nut suppliers.

NOTICE: The designation of the standard fasteners used on this vehicle are of coarse screw thread up to M8 and fine screw thread beyond M10. The designation to pitch relations are somewhat different between coarse screw thread and fine screw thread (Figure 18). Therefore, when replacing fasteners, the pitch should be confirmed carefully even if the replacement fastener is the same metric fastener.

METRIC COARSE SCREW THREADS

Designation of screw thread	Pitch (mm)	Designation of screw thread	Pitch (mm)
M39	4	M8	1.25
M36	4	M7	1
M33	3.5	M6	1
M30	3.5	M5x0.8	0.8
M27	3	M4.5	0.75
M24	3	M4x0.7	0.7
M22	2.5	M3.5	0.6
M20	2.5	M3x0.5	0.5
M18	2.5	M2.5	0.45
M16	2	M2.2	0.45
M14	2	M2	0.4
M12	1.75	M1.6	0.35
M10	1.5		

METRIC FINE SCREW THREADS

Designation of screw thread	Pitch (mm)	Designation of screw thread	Pitch (mm)
M39x3	3	M20x1.5	1.5
M36x3	3	M18x1.5	1.5
M33x2	2	M16x1.5	1.5
M30x2	2	M14x1.5	1.5
M27x2	2	M12x1.25	1.25
M24x2	2	M10x1.25	1.25
M22x1.5	1.5	M8x1	1

NC0004-0A-M-RS

Figure 18 Metric Screw Table

PREVAILING TORQUE FASTENERS

Figure 19

A prevailing torque nut is designed to develop an interference between the nut and bolt threads. This is most often accomplished by distorting the top of an all metal nut or by using a nylon patch on the threads in the middle of the hex flat. A nylon insert may also be used as a method of interference between nut and bolt threads (Figure 19).

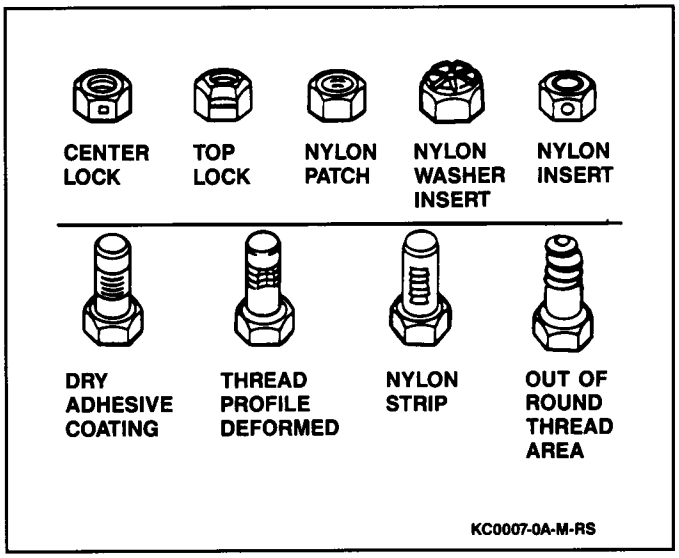

Figure 19 Prevailing Torque Fasteners

A prevailing torque bolt is designed to develop an interference between the bolt and nut threads, or the threads of a tapped hole. This is accomplished by distorting some of the threads or by using a nylon patch or adhesive (Figure 19).

Recommendations for Reuse

Figure 20

Clean non-rusted prevailing torque nuts may be reused as follows:

1. Clean dirt and other foreign material off nuts and bolts.
2. Inspect nuts or bolts to ensure there are no cracks, elongation or other signs of abuse or overtightening. If there is any doubt, replace with a new prevailing torque fastener of equal or greater strength.
3. Assemble parts and hand start nuts or bolts.

Important

- Check to ensure that before fastener seats, it develops proper torque as specified in the torque chart (Figure 20). If there is any doubt, replace it with a new prevailing torque fastener of equal or greater strength.

FASTENER TYPE	TORQUE UNITS	METRIC-SIZE FASTENERS							
		6	6.3	8	10	12	14	16	20
Nuts and All Metal Bolts	N.m	0.4	0.4	0.8	1.4	2.2	3.0	4.2	7.0
	Lb. In.	4	4	7	12	19	27	37	62
Adhesive or Nylon Coated Bolts	N.m	0.4	0.4	0.6	1.2	1.6	2.4	3.4	5.6
	Lb. In.	4	4	5	11	14	21	30	50
FASTENER TYPE	TORQUE UNITS	INCH-SIZE FASTENERS							
		.250	.312	.375	.437	.500	.562	.625	.750
Nuts and All Metal Bolts	N.m	0.4	0.6	1.4	1.8	2.4	3.2	4.2	6.2
	Lb. In.	4	5	12	16	21	28	37	55
Adhesive Nylon Coated Bolts	N.m	0.4	0.6	1.0	1.4	1.8	2.6	3.4	5.2
	Lb. In.	4	5	9	12	16	23	30	49

KC1014-0A-F-RP

Figure 20 Torque Chart

4. Tighten fastener to torque specified in the appropriate section of this manual.

Bolts and nuts which are rusty or damaged should be replaced with new parts of equal or greater strength.

METRIC ENGLISH CONVERSION TABLE

Figure 21

To convert customary units to metric units, multiply the customary units by the conversion factor shown in Figure 21. To convert metric units to customary units, divide the metric unit by the conversion factor shown in Figure 21.

DECIMAL AND METRIC EQUIVALENTS

Figure 22

For inch-to-millimeter decimal equivalents, refer to Figure 22.

Multiply	by	To Get Equivalent Number Of:
	LENGTH	
Inch	25.4	Millimeters (mm)
Foot	0.304 8	Meters (m)
Yard	0.914 4	Meters
Mile	1.609	Kilometers (km)
	AREA	
Inch^2	645.2	Millimeters^2 (mm^2)
	6.45	Centimeters^2 (cm^2)
Foot^2	0.092 9	Meters^2 (m^2)
Yard^2	0.836 1	Meters^2
	VOLUME	
Inch^3	16 387.	mm^3
	16.387	Cm^3
	0.016 4	Liters (l)
Quart	0.946 4	Liters
Gallon	3.785 4	Liters
Yard^3	0.764 6	Meters^3 (m^3)
	MASS	
Pound	0.453 6	Kilograms (kg)
Ton	907.18	Kilograms (kg)
Ton	0.907	Tonne (t)
	FORCE	
Kilogram	9.807	Newtons (N)
Ounce	0.278 0	Newtons
Pound	4.448	Newtons
	TEMPERATURE	
Degree Fahrenheit	(°F-32) ÷ 1.8	Degree Celsius (C)

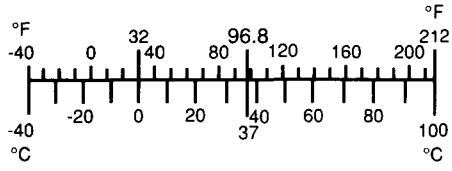

Multiply	by	To Get Equivalent Number Of:
	ACCELERATION	
Feet/sec^2	0.304 8	Meter/sec^2 (m/s^2)
Inch/sec^2	0.025 4	Meter/sec^2
	TORQUE	
Pound-inch	0.112 98	Newton-meters (N•m)
Pound-foot	1.355 8	Newton-meters
	POWER	
Horsepower	0.746	Kilowatts (kW)
	PRESSURE OR STRESS	
Inches of water	0.249 1	KiloPascals (kPa)
Pounds/sq. in. (psi)	6.895	KiloPascals
	ENERGY OR WORK	
BTU	1 055.	Joules (J)
Foot-pound	1.355 8	Joules
Kilowatt-hour	3 600 000. or 3.6 x 10^6	Joules (J = one W's)
	LIGHT	
Foot candle	10.764	Lumens/meter^2 (lm/m^2)
	FUEL PERFORMANCE	
Miles/gal	0.425 1	Kilometers/liter (km/l)
Gal/mile	2.352 7	Liter/kilometer (l/km)
	VELOCITY	
Miles/hour	1.609 3	Kilometers/hr. (km/h)

NC9214-0A-R-RS

Figure 21 Metric Customary Conversion Table

DECIMAL AND METRIC EQUIVALENTS

Fractions	Decimal In.	Metric mm	Fractions	Decimal In.	Metric mm
1/64	.015625	.39688	33/64	.515625	13.09687
1/32	.03125	.79375	17/32	.53125	13.49375
3/64	.046875	1.19062	35/64	.546875	13.89062
1/16	.0625	1.58750	9/16	.5625	14.28750
5/64	.078125	1.98437	37/64	.578125	14.68437
3/32	.09375	2.38125	19/32	.59375	15.08125
7/64	.109375	2.77812	39/64	.609375	15.47812
1/8	.125	3.1750	5/8	.625	15.87500
9/64	.140625	3.57187	41/64	.640625	16.27187
5/32	.15625	3.96875	21/32	.65625	16.66875
11/64	.171875	4.36562	43/64	.671875	17.06562
3/16	.1875	4.76250	11/16	.6875	17.46250
13/64	.203125	5.15937	45/64	.703125	17.85937
7/32	.21875	5.55625	23/32	.71875	18.25625
15/64	.234375	5.95312	47/64	.734375	18.65312
1/4	.250	6.35000	3/4	.750	19.05000
17/64	.265625	6.74687	49/64	.765625	19.44687
9/32	.28125	7.14375	25/32	.78125	19.84375
19/64	.296875	7.54062	51/64	.796875	20.24062
5/16	.3125	7.93750	13/16	.8125	20.63750
21/64	.328125	8.33437	53/64	.828125	21.03437
11/32	.34375	8.73125	27/32	.84375	21.43125
23/64	.359375	9.12812	55/64	.859375	21.82812
3/8	.375	9.52500	7/8	.875	22.22500
25/64	.390625	9.92187	57/64	.890625	22.62187
13/32	.40625	10.31875	29/32	.90625	23.01875
27/64	.421875	10.71562	59/64	.921875	23.41562
7/16	.4375	11.11250	15/16	.9375	23.81250
29/64	.453125	11.50937	61/64	.953125	24.20937
15/32	.46875	11.90625	31/32	.96875	24.60625
31/64	.484375	12.30312	63/64	.984375	25.00312
1/2	.500	12.70000	1	1.00	25.40000

NC2015-0A-R-RS

Figure 22 Decimal and Metric Conversions

STANDARD NOMENCLATURE FOR CERTAIN ELECTRONIC COMPONENTS AND SYSTEMS

Figures 23 and 24

Starting with 1993 model year, General Motors will be complying with the Society of Automotive Engineers (SAE) Recommended Practice J 1930. J 1930 is an industry-wide standard that was adopted into government regulations and requires certain electrical and electronic components and systems be known by the same nomenclature that have the same function. This standard is also being applied to abbreviations and acronyms. This standard is being used in all 1993 GM service publications.

To make this standard work, some names and abbreviations are being replaced with those recommended by SAE Standard. What follows is a listing of former GM names and abbreviations besides the new J 1930 name and abbreviations.

ABBREVIATIONS CHARTS

Figures 25, 26, and 27

For a list of abbreviations that may appear in this manual, refer to Figures 25, 26 and 27.

FORMER GM NAME	NEW SAE NAME TERM
Absolute Pressure Sensor Aps - APS	Manifold Absolute Pressure Sensor - MAP Sensor
Air Cleaner Assembly	Air Cleaner - ACL
Air Cleaner Filter Element	Air Cleaner Filter - ACL Filter
Air Injection Reaction System - A.I.R. System	Secondary Air Injection System - AIR System
Assembly Line Communication Link - ALCL	Data Link Connector - DLC
Assembly Line Data Link - ALDL	Data Link Connector - DLC
Barometric Pressure Sensor - BARO Sensor	Barometric Pressure Sensor - BARO Sensor
BCM-PCM Data Problem	BCM-PCM Data Link
Calibration Pack - CAL-PAK	Electronically Erasable Programmable Read Only Memory - EEPROM
Calibration Pack - CAL-PAK	Erasable Programmable Read Only Memory - EPROM
Calibration Pack - CAL-PAK	Programmable Read Only Memory - PROM
Camshaft Sensor	Camshaft Position Sensor - CMP Sensor
Canister Purge - CP	Evaporative Emission Canister Purge - EVAP Canister Purge
Catalytic Converter - Cat. Conv.	Oxidation Catalytic Converter - OC
Catalytic Converter - Cat. Conv.	Three Way + Oxidation Catalytic Converter - TWC+OC
Catalytic Converter - Cat. Conv.	Three Way Catalytic Converter - TWC
Catalytic Converter - Cat. Conv.	Warm Up Oxidation Catalytic Converter - WU-OC
Catalytic Converter - Cat. Conv.	Warm Up Three Way Catalytic Converter - WU-TWC
Check Engine Indicator	Malfunction Indicator Lamp - MIL
Code	Diagnostic Trouble Code - DTC
Computer Command Control - CCC	Engine Control Module - ECM
Computer Controlled Coil Ignition - C3I	Electronic Ignition - EI
Controlled Canister Purge - CCP	Evaporative Emission Canister Purge - EVAP Canister Purge
Coolant Temperature Sensor - CTS	Engine Coolant Temperature Sensor - ECT Sensor
Coolant Temperature Switch - CTS	Engine Coolant Temperature Switch - ECT Switch
Detonation Sensor	Knock Sensor - KS
Diagnostic Circuit Check	On-Board Diagnostic System Check - OBD System Check
Digital Electronic Fuel Injection - DEFI	Multiport Fuel Injection - MFI
Digital Electronic Fuel Injection - DEFI	Sequential Multiport Fuel Injection - SFI
Digital Fuel Injection - DFI	Multiport Fuel Injection - MFI
Digital Fuel Injection - DFI	Sequential Multiport Fuel Injection - SFI
Direct Ignition System - DIS	Electronic Ignition System - EI System
Distributor HEI Module	Distributor Ignition Control Module - DI Control Module
Distributorless Ignition System - DIS	Electronic Ignition System - EI System
Dual Bed Monolith - DBM	Oxidation Catalytic Converter - OC
Dual Bed Monolith - DBM	Three Way Catalytic Converter - TWC
Electronic Air Control - EAC	Secondary Air Injection Bypass Valve - AIR Bypass Valve
Electronic Air Switching - EAS	Secondary Air Injection Switching Valve - AIR Switching Valve
Electronic Control Module - ECM	Engine Control Module - ECM
Electronic Fuel Injection - EFI	Multiport Fuel Injection - MFI
Electronic Fuel Injection - EFI	Sequential Multiport Fuel Injection - SFI
Electronic Fuel Injection - EFI	Throttle Body Fuel Injection - TBI

PC0080-0A-T-RS

Figure 23 Former GM Names with Corresponding SAE Term — 1 of 2

FORMER GM NAME	NEW SAE NAME TERM
Electronic Spark Control Circuit - ESC Circuit	Knock Sensor Circuit - KS Circuit
Electronic Spark Control System - ESC System	Knock Sensor System - KS System
Electronic Spark Timing - EST	Ignition Control - IC
Electronic Spark Timing Circuit - EST Circuit	Ignition Control Circuit - IC Circuit
Electronic Vacuum Regulator Valve - EVRV	Exhaust Gas Recirculation Electronic Vacuum Regulator Solenoid Valve - EGR Electronic Vacuum Regulator Solenoid Valve
Engine Calibration Unit - ECU	Programmable Read Only Memory - PROM
Evaporative Emission Control System - EECS	Evaporative Emission System - EVAP System
Exhaust Gas Recirculation/Thermostatic Vacuum Switch - EGR/TVS	Exhaust Gas Recirculation Thermal Vacuum Valve - EGR TVV
Fuel CAL-PAK Missing	Programmable Read Only Memory Missing - PROM Missing
High Energy Ignition - HEI	Distributor Ignition - DI
Lean Exhaust	Lean Heated Oxygen Sensor Signal - Lean H02S
Lean Exhaust	Lean Oxygen Sensor Signal - Lean 02S Signal
Manifold Air Temperature Sensor - MAT Sensor	Intake Air Temperature Sensor - IAT Sensor
MEM-CAL Error	Erasable Programmable Read Only - Only Memory Error - EPROM Error
MEM-CAL Error	Programmable Read Only Memory Error - PROM Error
Memory and Calibration Unit - MEM-CAL	Erasable Programmable Read Only Memory - EPROM
Memory and Calibration Unit - MEM-CAL	Programmable Read Only Memory - PROM
Multi-Port Fuel Injection - MPFI	Multiport Fuel Injection - MFI
Oxygen Sensor - 02	Heated Oxygen Sensor - H02S
Oxygen Sensor - 02	Oxygen Sensor - 02S
Part/Neutral Switch - P/N Switch	Park/Neutral Position Switch - PNP Switch
Port Fuel Injection - PFI	Multiport Fuel Injection - MFI
Pulse Air Injection System - PAIR	Pulsed Secondary Air Injection System - PAIR System
Revolutions Per Minute - rpm	Engine Speed - RPM
Rich Exhaust	Rich Heated Oxygen Sensor Signal - Rich H02S Signal
Rich Exhaust	Rich Oxygen Sensor Signal - Rich 02S Signal
"Scan" Data	Scan Tool Data - ST Data
Service Engine Soon Indicator - SES Indicator	Malfunction Indicator Lamp - MIL
Thermal Vacuum Switch - TVC	Thermal Vacuum Valve - TVV
Thermostatic Air Cleaner - TAC	Air Cleaner - ACL
Throttle Body Injection - TBI	Throttle Body Fuel Injection - TBI
Throttle Position Sensor - TPS	Throttle Position Sensor - TP Sensor
Throttle Position Switch - TPS	Closed Throttle Position Switch - CTP Switch
Throttle Switch	Closed Throttle Position Switch - CTP Switch
Throttle Switch	Wide Open Throttle Switch - WOT Switch
Tuned Port Injection - TPI	Multiport Fuel Injection - MFI
Viscous Converter Clutch - VCC	Torque Converter Clutch - TCC

PC0081-0A-T-RS

Figure 24 Former GM Names with Corresponding SAE Term — 2 of 2

LIST OF AUTOMOTIVE ABBREVIATIONS WHICH MAY BE USED IN THIS MANUAL

A	
A-6	Axial 6 Cylinder A/C Compressor
A/C	Air Conditioning
A/F	Air/Fuel (A/F Ratio)
ABDC	After Bottom Dead Center
ABS	Acrylonitrile-Butadiene-Styrene
ABS	Antilock Brake System
AC	Alternating Current (Also a GM Division)
ACC	Automatic Climate Control
ADF	Air Deflector Valve
AIR	Air Injection Reaction
Al	aluminum
ALC	Automatic Level Control
ALCL	Assembly Line Communication Link
ALDL	Assembly Line Data Link
AM/FM	Amplitude Modulation, Frequency Modulation
amp	amperes
API-GL	American Petroleum Institute Gear Lubricant
APS	Absolute Pressure Sensor
APT	Adjustable Part Throttle
ARS	Automatic Restraint System
ATC	Automatic Temperature Control
ATDC	After Top Dead Center
ATS	Air Temperature Sensor
avg	average
AWD	All Wheel Drive
AWG	American Wire Gage
B	
BARO	Barometric Absolute Pressure Sensor
BBDC	Before Bottom Dead Center
BCM	Body Computer Module
BHP	Brake Horsepower
BP	Back Pressure
BTDC	Before Top Dead Center
BtU	British thermal unit
C	
C	Celsius
C LOOP	Closed Loop
C-4	Computer Controlled Catalytic Converter
C3I, 3C1	Computer Controlled Coil Ignition
CAD	Computer Aided Design
CAM	Computer Aided Manufacturing
CCC, 3-C	Computer Command Control
CCOT	Cycling Clutch Orifice Tube
CCP	Controlled Canister Purge cad
Cd	cadmium
CDRV	Crankcase Depression Regulator Valve
CEAB	Cold Engine Airbleed
CEMF	Counter Electromotive Force
cfm	cubic feet per minute
cg	center of gravity
CHA	Carburetor Hot Air
CID	Cubic Inch Displacement
CLCC	Closed Loop Carburetor Control
CLTBI	Closed Loop Throttle Body Injection
cm3	cubic centimeter
CO	carbon monoxide
COA	Carburetor Outside Air
CP	Canister Purge
CPS	Central Power Supply
CPU	Central Processing Unit
CTS	Coolant Temperature Sensor, Coolant Temperature Switch, Cold Trapped Spark
cu ft or ft^3	cubic foot (feet)
cu in or in^3	cubic inch (inches)
CV	constant velocity
D	
dB	decibels
dBA	decibels on A-weighted scale
DBB	Dual Bed Bead
DBM	Dual Bed Monolith
DC	Direct Current
DEC	Digital Electronic Controller
DEFI	Digital Electronic Fuel Injection
DERM	Diagnostic Energy Reserve Module
DFI	Digital Fuel Injection
dia	diameter
DIS	Direct Ignition System
DVM	Digital Volt Meter
E	
EAC	Electronic Air Control
EAS	Electric Air Switching
EBCM	Electric Brake Control Module
ECC	Electronic Comfort Control, Electronic Climate Control
ECI	Extended Compression at Idle
ECM	Electronic (Engine) Control Module
ECS	Emission Control System
ECU	Engine Calibration Unit
EDES	Electric Divert Electric Air Switching Valve
EEC	Evaporative Emission Control
EECS	Evaporative Emissions Control System
EES	Evaporative Emission System
EFE	Early Fuel Evaporation
EFI	Electronic Fuel Injection
EGR	Exhaust Gas Recirculation
ELC	Electronic Level Control
EMF	Electromotive Force
EOS	Exhaust Oxygen Sensor
EPR	Exhaust Pressure Sensor
EPROM	Erasable Programmable Read Only Memory

NC0046-0A-RH-RS

Figure 25 Abbreviations Chart — 1 of 3

ESC	Electronic Spark Control
EST	Electronic Spark Timing
ETC	Electronic Temperature Control
ETCC	Electronic Touch Comfort Control
ETR	Electronic Touch Climate Control
EVRV	Electronic Vacuum Regulator Valve
F	
F	Fahrenheit
FDC	Fuel Data Center
FEC	Fuel Evaporator Control
FED	Federal (all states except California)
FI	Fuel Injection
FICD	Fast Idle Control Diaphragm
ft	foot
FWD	Front Wheel Drive, Four Wheel Drive
G	
g	gravitational acceleration
GA	gage
gal	gallon
GM	General Motors
GCW	Gross Combination Weight
H	
H_20	water
H/CMPR	High Compression
HC	hydrocarbons
HD	Heavy Duty
HDC	Heavy Duty Cooling
HEI	High Energy Ignition
hex	hexagon
Hg	mercury
HI ALT	High Altitude
HIC	High Idle Compensator
hP	horsepower
HPCA	Housing Pressure Cold Advance
HPL	High Pressure Liquid
HPV	High Pressure Vapor
HVAC	Heater-Vent-Air Conditioning
Hz	hertz
I	
IAC	Idle Air Control
IAT	Intake Air Temperature Sensor
IC	Integrated Circuit
ID	Insider Diameter
ILC	Idle Load Compensator
IP	Instrument Panel
ISC	Idle Speed Control
J	
K	
kg	kilogram
kHz	kilohertz
km/h	kilometers per hour
km/l	kilometers per liter
kPa	KiloPascals
kv	kilovolts
L	
L	liter
L-4	Four Cylinder, In-Line Engine
L-6	Six Cylinder, In-Line Engine
lb. ft.	pound feet (torque)
lb. in.	pound inch (torque)
LCD	Liquid Crystal Display
LF	Left Front
LH	Left Hand
LR	Left Rear
M	
M/C	Mixture Control
MAF	Mass Airflow
MAP	Manifold Absolute Pressure Sensor
MDP	Manifold Differential Pressure
MEM-CAL	Memory and Calibration Unit
MFI	Multi-port Fuel Injection
mgd	million gallons per day
mi	miles
mm	millimeters
MPFI	Multi Port Fuel Injection
mpg	miles per gallon
mph	miles per hour
ms	millisecond
MT	Manual Transmission
MV	megavolt
mV	multivolt
MVS	Metering Valve Sensor
N	
N·m	Newton-meters (torque)
NC	Normally Closed
NEU	neutral
Ni	nickel
NLGI	National Lubricating Grease Institute
NO	Normally Open
No	oxides of nitrogen
NPTC	National Pipe Thread Coarse
NPTF	National Pipe Thread Fine
O	
o_2	oxygen
OC	Oxidizing Converter
OD	Outside Diameter
OEM	Original Equipment Manufacturer
ORC	Oxidizing Reducer Converter
oz	ounce(s)
P	
P/N	Park/Neutral
PAIR	Pulse Air Injection Reaction
PCV	Positive Crankcase Ventilation
PECV	Power Enrichment Control Valve
PEDESV	Pressure Operated Electric Divert Electric Switching Valve
PFI	Port Fuel Injection
POA	Pilot Operated Absolute Valve
POLYE	polyethylene
POLYF	polyfoam
POLYP	polypropylene

NC0047-0A-R-RS

Figure 26 Abbreviations Chart — 2 of 3

POLYU	polyurethane
ppm	parts per million
PROM	Programmable Read Only Memory
PS	Power Steering
psi	pound per square inch
psia	pounds per square inch absolute
psig	pounds per square inch gage
pt	pint(s)
PTO	Power Take Off
PWM	Pulse Width Modulated
Q	
qt	quart(s)
R	
R-4	Radial Four Cylinder Air Compressor
R-12	Refrigerant-12
RAM	Random Access Memory
RAP	Retained Access Power
RF	Right Front
RFI	Radio Frequency Interference
RH	Right Hand
RIM	Reaction Injection Molded Urethane
rpm	revolutions per minute
RPO	Regular Production Option
RR	Right Rear
RRIM	Reinforced Reaction Injected Molded Urethane
RT	right
RTV	Room Temperature Vulcanizing
RVB	Rear Vacuum Brake
RVR	Response Vacuum Reducer
RWAL	Rear Wheel Antilock Brake System
RWD	Rear Wheel Drive
S	
SAE	Society of Automotive Engineers
SEO	Special Equipment Option
SES	Service Engine Soon
SI	System International
Si	Silicone
SMC	Sheet Molded Compound
SO_2	sulfur dioxide
sq ft., ft^2	square foot(feet)
sq. in., in^2	square inch(es)
T	
TAC	Thermostatic Air Cleaner
TBI	Throttle Converter Clutch, Transmission
TCC	Torque Converter Clutch, Transmission Converter Clutch
TCCTVMV	Torque Converter Clutch Trim Vacuum Modulated Valve
TDC	Top Dead Center
TH	Turbo Hydra-matic
THERMAC	Thermostatic Air Cleaner
TPE	Thermo Plastic Elastomer
TPI	Tuned Port Injection
TPO	Thermo Plastic Olefin
TPS	Throttle Position Sensor, Throttle Position Switch
TRC	Throttle Return Control
TV	Throttle Valve
TVBV	Turbocharger Vacuum Bleed Valve
TVRS	Television and Radio Suppression
TVS	Thermal Vacuum Switch
TXV	Thermal Expansion Valve
U	
U-joint	universal joint
V	
v	volt(s), voltage
V4	Four Cylinder Engine
V6	Six Cylinder Engine
V8	Eight Cylinder Engine
VAC	vacuum
VATS	Vehicle Anti-Theft System
VDV	Vacuum Delay Valve
vel	velocity
VF	Vacuum Fluorescent
VIN	Vehicle Identification Number
VLV	Vacuum Limiting Valve
VLVMV	Vacuum Limiting Vacuum Modulator Valve
VMV	Vacuum Modulator Valve
VRV	Vacuum Reducer Valve
VSS	Vehicle Speed Sensor
W	
W/S	Windshield
WOT	Wide Open Throttle
WSS	Wheel Speed Sensor
X	
X-valve	expansion valve
Y	
yd	yard(s)
Z	
Zn	zinc

NC9004-0A-JT-RS

Figure 27 Abbreviations Chart — 3 of 3

REPLACEMENT LABELS

Replacement labels are available through GM SPO for the following:

- Vehicle Emission Control Information Label
- Unleaded Fuel Only Label
- Fan Blade Caution Label
- Odometer Repair Notice Label
- Brake Interlock Label
- Air Conditioning Fan Caution Label

The vehicle certification label and service parts identification label are not available as service parts.

SERVICE PARTS IDENTIFICATION LABEL

Figures 28 and 29

The service parts identification label has been developed and placed on the vehicle to aid service and parts personnel in identifying parts and options originally installed on the vehicle. The label is located on the inside of the glove compartment door (Figure 28). Refer to Figure 29 for information on interpreting the label.

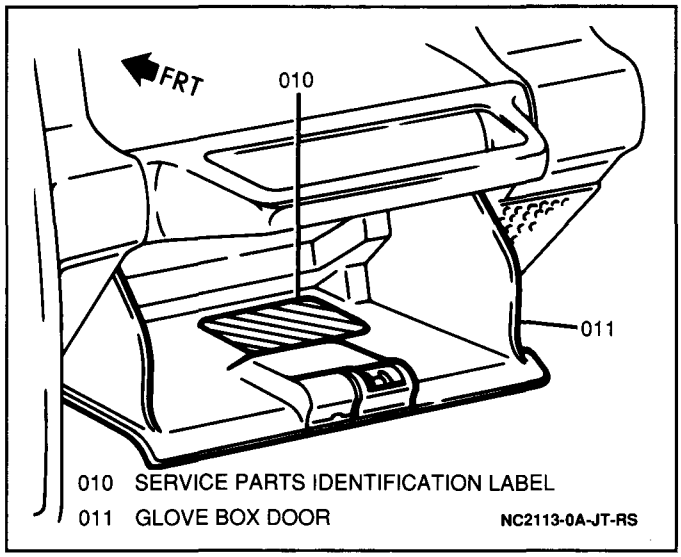

Figure 28 Service Parts Identification Label Location

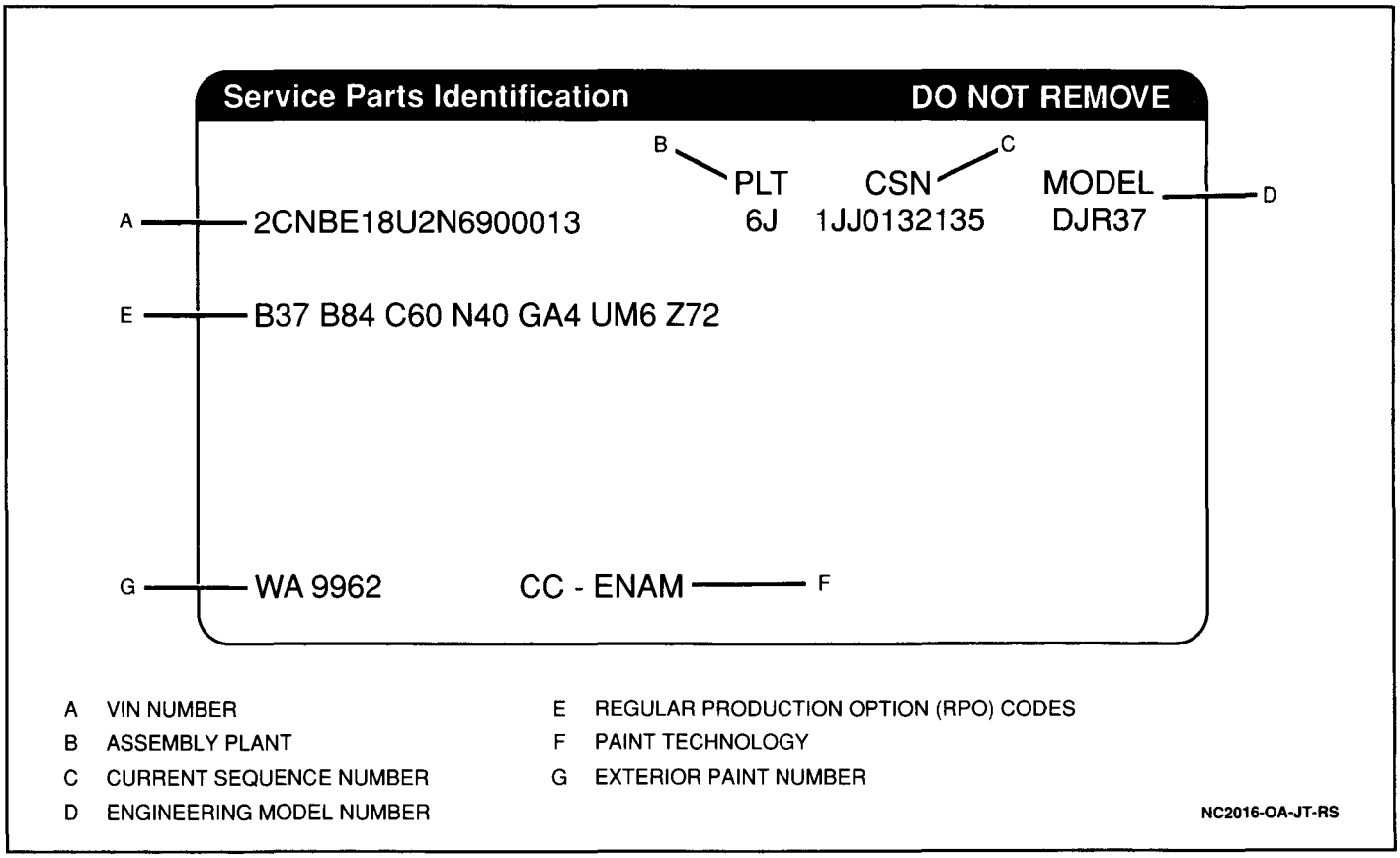

Figure 29 Service Parts Identification Label (Typical)

OPTIONS AND PROCESS CODES

Figures 30 and 31

Vehicle options are identified on the Service Parts Identification Label by an option code. Option codes are three digit combinations of letters and numbers. They identify equipment installed on the vehicle, paint and trim colors. Refer to Figures 30 and 31 for interpretations of possible regular production options (RPO) codes that may be listed on the Service Parts Identification Label.

COLOR CODE	EXTERIOR COLOR
38U	Magenta
16U	White
26U	Competition Blue
35U	Flash Yellow
*	Black
75U	Brilliant Red, Met.
80U	Med. Quasar Blue Metallic
81U	Bright Red
18U	Polynesian Green
	CANVAS COLORS
10T	White
41T	Black
	INTERIOR COLOR
19I	Off-Black

* Color code not available at time of printing

PC2115-0A-JT-RS

Figure 31 Options and Process Codes — 2 of 2

CODE	OPTION	CODE	OPTION
AM7	Folding Seat, Rear	N33	Tilt Type Steering Column
AM9	Split Folding Seat, Rear	N40	Power Steering, Non-variable Ratio
AP6	Rear Seat not Desired	PG2	15 x 5.5 Wheels, Steel
AQ9	Front Bucket Seats, Recline	P17	Spare Wheel Cover
AR9	Front Bucket Seats, European Style, Recline	QAR	P195/75R15 Tires
AS8	Front Seat Manual Restraint System	QA4	15 x 5.5 Wheels, Aluminum
B1A	Port of Entry Cami	QJT	P205/75R15/N Tires
B1B	Ornamentation Interior, Deluxe	T61	Daytime Running Lighting
B2W	P205/75R15 Tires	UH8	Cluster Coolant Temperature, Tachometer, Trip Odometer
B2Z	Deluxe Van Package		
B37	Floor Mats, Front and Rear	UL5	Radio not Desired
B51	Rocker Molding, Extra Wide	UM6	Radio AM/FM Stereo Seek/Scan Auto Reverse Cassette, Clock ETR
B84	Ornamentation Exterior Molding, Body Side		
B94	Ornamentation Exterior Emblem, Body		
CD4	Windshield Wiper System, Pulse	UM7	Radio AM/FM Stereo Seek/Scan Clock ETR
C25	Wiper System, Rear Window	UQ9	Speaker System not Desired
C42	HVAC System, Deluxe Heater	U2E	Cluster Instrument, Coolant Temperature, Trip Odometer
C49	Electric Rear Window Defogger		
C60	HVAC System, Air Conditioner	U64	Speaker System 4 Dual Front Dash Mounted, Dual Standard Range Package
DR1	Outside Mirror, Left and Right, Manual Control		
JA4	Brake System Power, Front Disc, Rear Drum, Rear Wheel Antilock		
		U78	Radio Antenna, Fixed
LS5	1.6L 4 Cylinder Engine TBI OHC Aluminum Suzuki	U89	Car Trailer Wiring Harness
		VG8	Vehicle Buyer Notice Label
MM5	5-Speed Manual Transmission	VK3	License Plate Front Mounting Package
MX1	3-Speed Automatic Transmission	VR2	Trailer Hitch, Factory Installed
NA5	Emission System, Federal Requirements	X6W	Manual Locking Hub
NB2	Emission System, California Requirements	X6Z	Automatic Locking Hub
NV5	Differential Carrier Shield	Z88	Conversion, GMTB
NY7	Transfer Case Shield		

PC2114-0A-JT-RS

Figure 30 Options and Process Codes — 1 of 2

SERVICE PARTS INFORMATION

Component Name Used in Section 0A	Reference Name in Service Parts Catalog	Group Number
Vehicle Emission Control Information Label	Label, Veh Emis Cont Info	8.808
Unleaded Fuel Only Label	Label, Unleaded Fuel Only	8.808
Fan Blade Caution Label	Label, Fan Blade Caution	8.808
Odometer Repair Notice Label.	Label, Odom Rpr Ntc	8.808
Brake Interlock Label	Label, Brake Interlock	8.808
Air Conditioning Fan Caution Label	Label, Air Cond Fan (Caution)	8.808

SECTION 0B

MAINTENANCE AND LUBRICATION

CONTENTS

Scheduled Maintenance Service 0B-1
Normal Vehicle Use 0B-1
Schedule I 0B-1
Schedule II 0B-4
Explanation of Scheduled Maintenance Services 0B-4
Engine Oil 0B-4
Engine Oil Filter 0B-4
Engine Oil Viscosity 0B-4
Other Required Services Each Time Oil is Changed 0B-4
Chassis Lubrication 0B-5
Lubeless Suspension and Steering Joints 0B-5
Timing Belt Replacement 0B-5
Clutch Pedal Free Travel Inspection/Adjustment 0B-5
Services to be Performed at Least Twice a Year 0B-5
Services to be Performed at Least Once a Year 0B-5
Continuation of Scheduled Maintenance Services 0B-6
Throttle Body Fuel Injection (TBI) Unit Mounting Torque 0B-6
Tire and Wheel Inspection and Rotation 0B-6
Cooling System Service 0B-7
Transmission/Transfer Case Service 0B-7
Front and Rear Axle Housing 0B-7
Propeller Shafts and U-Joints 0B-8
Wheel Bearings 0B-8
Spark Plug Replacement 0B-8
Distributor Cap and Secondary (Spark Plug) Wire Inspection 0B-8
Exhaust Gas Recirculation (EGR) System Service 0B-8
Air Cleaner (ACL) Filter Replacement 0B-8
Engine Timing Check 0B-8
Wiring Harness and Connectors 0B-8
Fuel Tank, Cap and Pipes/Hoses Inspection 0B-8
Positive Crankcase Ventilation (PCV) System Inspection 0B-8
Evaporative Emission (EVAP) Canister Inspection 0B-8
Engine Idle Speed Adjustment 0B-8
Fuel Filter 0B-8
Recommended Fluids and Lubricants 0B-9
Maintenance Items 0B-10
Approximate Fluid Capacities 0B-10
Adjustable Belt Tension Specifications 0B-10
Tire Pressure Specifications 0B-10

SCHEDULED MAINTENANCE SERVICE

NORMAL VEHICLE USE

The maintenance instructions contained in the "Maintenance Schedule" (Figures 1 and 2) are based on the assumption that the vehicle will be used as designed:

- To carry passengers and cargo within the limitations indicated on the tire placard located on the edge of the driver's side door lock pillar.
- On reasonable road surfaces within legal operating limits.
- On unleaded gasoline.

SCHEDULE I

Figure 1

Follow Schedule I if the vehicle is operated under one or more of the following conditions:

- When most trips are less than 4 miles (6 km).
- Operating when outside temperatures remain below freezing and when most trips are less than 10 miles (16 km).
- When most trips include extended idling and/or frequent low-speed operation as in stop-and-go traffic.
- Towing a trailer.
- Operating in dusty areas.

Schedule I should also be followed if the vehicle is used in delivery service, police, taxi or other commercial applications.

SCHEDULED MAINTENANCE SERVICES — SCHEDULE I

THE SERVICES SHOWN IN THIS SCHEDULE UP TO 60,000 MILES (100 000 km) SHOULD BE PERFORMED AFTER 60,000 MILES (100 000 km) AT THE SAME INTERVALS.

ITEM NO.	TO BE SERVICED *SEE EXPLANATION OF SCHEDULED MAINTENANCE SERVICES FOLLOWING SCHEDULES I AND II.*	WHEN TO PERFORM *MILES (KILOMETERS) OR MONTHS (WHICHEVER OCCURS FIRST).*	MILES (000)																									
			3	6	7.5	9	12	15	18	21	22.5	24	27	30	33	36	37.5	39	42	45	48	50	51	52.5	54	57	60
			KILOMETERS (000)																								
			5	10	12.5	15	20	25	30	35	37.5	40	45	50	55	60	62.5	65	70	75	80	83	85	87.5	90	95	100
1	ENGINE OIL AND OIL FILTER CHANGE*	EVERY 3,000 MILES (5 000 km) OR 3 MONTHS.	•	•		•	•	•	•	•		•	•	•	•	•		•	•	•	•		•		•	•	•
2	IDLE SPEED*	EVERY 15,000 MILES (25 000 km).						•						•						•							•
3	COOLING SYSTEM SERVICE*	EVERY 30,000 MILES (50 000 km) OR 30 MONTHS.												•													•
4	TRANSMISSION/TRANSFER CASE	SEE "EXPLANATION OF SCHEDULED MAINTENANCE SERVICES" FOLLOWING SCHEDULES I AND II.																									
5	FRONT AND REAR AXLE HOUSINGS																										
6	SPARK PLUG REPLACEMENT*	EVERY 30,000 MILES (50 000 km).												•													•
7	DISTRIBUTOR CAP AND SECONDARY (SPARK PLUG) WIRES*	EVERY 15,000 MILES (25 000 km) OR 15 MONTHS.						•						•						•							•
8	POSITIVE CRANKCASE VENTILATION (PCV) VALVE REPLACEMENT*	EVERY 50,000 MILES (83 000 km).																				•					
9	EXHAUST GAS RECIRCULATION (EGR) SYSTEM INSPECTION*	EVERY 50,000 MILES (83 000 km).																				•					
10	AIR CLEANER (ACL) FILTER REPLACEMENT*	EVERY 15,000 MILES (25 000 km).						•						•						•							•
11	FUEL TANK, CAP AND PIPE/HOSES INSPECTION*‡	SEE "EXPLANATION OF SCHEDULED MAINTENANCE SERVICES" FOLLOWING SCHEDULES I AND II.																									
12	OXYGEN SENSOR (O2S) REPLACEMENT*	EVERY 80,000 MILES (133 000 km).																									
13	EVAPORATIVE EMISSION (EVAP) CANISTER REPLACEMENT*	EVERY 100,000 MILES (166 000 km).																									
14	ENGINE CONTROL MODULE (ECM) & ASSOCIATED SENSORS INSPECTION*	EVERY 100,000 MILES (166 000 km).																									
15	FUEL INJECTOR INSPECTION*	EVERY 100,000 MILES (166 000 km).																									
16	EMISSION SYSTEM HOSES INSPECTION*	EVERY 60,000 MILES (100 000 km).																									•
17	THREE WAY CATALYTIC CONVERTER (TWC) INSPECTION*	EVERY 100,000 MILES (166 000 km).																									
18	POWER STEERING SYSTEM INSPECTION	EVERY 7,500 MILES (12 500 km) OR 7.5 MONTHS.			•			•			•			•			•			•				•			•

‡ THE U.S. ENVIRONMENTAL PROTECTION AGENCY HAS DETERMINED THAT THE FAILURE TO PERFORM THIS MAINTENANCE ITEM WILL NOT NULLIFY THE EMISSION WARRANTY OR LIMIT RECALL LIABILITY PRIOR TO THE COMPLETION OF VEHICLE USEFUL LIFE. GENERAL MOTORS, HOWEVER, URGES THAT ALL RECOMMENDED MAINTENANCE SERVICES BE PERFORMED AT THE INDICATED INTERVALS AND THE MAINTENANCE BE RECORDED IN SECTION E OF THE OWNER'S MAINTENANCE SCHEDULE.

* AN EMISSION CONTROL SERVICE.

Figure 1 Maintenance Schedule I

PC1001-0B-JT-RS

SCHEDULED MAINTENANCE SERVICES — SCHEDULE II

THE SERVICES SHOWN IN THIS SCHEDULE UP TO 100,000 MILES (160 000 km) SHOULD BE PERFORMED AFTER 100,000 MILES (160 000 km) AT THE SAME INTERVALS.

ITEM NO.	TO BE SERVICED *SEE EXPLANATION OF SCHEDULED MAINTENANCE SERVICES FOLLOWING SCHEDULES I AND II.*	WHEN TO PERFORM *MILES (KILOMETERS) OR MONTHS (WHICHEVER OCCURS FIRST).*	MILES (000)															
			7.5	15	22.5	24	30	37.5	45	50	52.5	60	67.5	75	80	82.5	90	100
			KILOMETERS (000)															
			12.5	25	37.5	40	50	62.5	75	83	87.5	100	112.5	125	128	137.5	150	160
1	ENGINE OIL AND OIL FILTER CHANGE*	EVERY 7,500 MILES (12 500 km) OR 7.5 MONTHS.	•	•	•		•	•	•		•	•	•	•		•	•	
2	IDLE SPEED*	EVERY 15,000 MILES (25 000 km).		•			•		•			•		•			•	
3	COOLING SYSTEM SERVICE*	EVERY 30,000 MILES (50 000 km) OR 30 MONTHS.					•					•					•	
4	TRANSMISSION/TRANSFER CASE	SEE "EXPLANATION OF SCHEDULED MAINTENANCE SERVICES" FOLLOWING SCHEDULES I AND II.																
5	FRONT AND REAR AXLE HOUSINGS																	
6	SPARK PLUG REPLACEMENT*	EVERY 30,000 MILES (50 000 km).					•					•					•	
7	DISTRIBUTOR CAP AND SECONDARY (SPARK PLUG) WIRES*	EVERY 60,000 MILES (100 000 km).										•						
8	POSITIVE CRANKCASE VENTILATION (PCV) VALVE REPLACEMENT*	EVERY 50,000 MILES (83 000 km).								•								•
9	EXHAUST GAS RECIRCULATION (EGR) SYSTEM INSPECTION*	EVERY 50,000 MILES (83 000 km).								•								•
10	AIR CLEANER (ACL) FILTER REPLACEMENT*	EVERY 30,000 MILES (50 000 km).					•					•					•	
11	FUEL TANK, CAP AND LINES PIPES/HOSES INSPECTION*‡	SEE "EXPLANATION OF SCHEDULED MAINTENANCE SERVICES" FOLLOWING SCHEDULES I AND II.																
12	OXYGEN SENSOR (O2S) REPLACEMENT*	EVERY 80,000 MILES (133 000 km).													•			
13	EVAPORATIVE EMISSION (EVAP) CANISTER REPLACEMENT*	EVERY 100,000 MILES (166 000 km).																•
14	ENGINE CONTROL MODULE (ECM) & ASSOCIATED SENSORS INSPECTION*	EVERY 100,000 MILES (166 000 km).																•
15	FUEL INJECTOR INSPECTION*	EVERY 100,000 MILES (166 000 km).																•
16	EMISSION SYSTEM HOSES INSPECTION*	EVERY 60,000 MILES (100 000 km).										•						
17	THREE WAY CATALYTIC CONVERTER (TWC) INSPECTION*	EVERY 100,000 MILES (166 000 km).																•
18	POWER STEERING SYSTEM INSPECTION	EVERY 7,500 MILES (12 500 km) OR 7.5 MONTHS.	•	•	•		•	•	•		•	•	•	•		•	•	

‡ THE U.S. ENVIRONMENTAL PROTECTION AGENCY HAS DETERMINED THAT THE FAILURE TO PERFORM THIS MAINTENANCE ITEM WILL NOT NULLIFY THE EMISSION WARRANTY OR LIMIT RECALL LIABILITY PRIOR TO THE COMPLETION OF VEHICLE USEFUL LIFE. GENERAL MOTORS, HOWEVER, URGES THAT ALL RECOMMENDED MAINTENANCE SERVICES BE PERFORMED AT THE INDICATED INTERVALS AND THE MAINTENANCE BE RECORDED IN SECTION E OF THE OWNER'S MAINTENANCE SCHEDULE.

* AN EMISSION CONTROL SERVICE.

PC1002-0B-JT-RS

Figure 2 Maintenance Schedule II

SCHEDULE II

Figure 2

Follow Schedule II ONLY if none of the driving conditions specified in Schedule I apply.

EXPLANATION OF SCHEDULED MAINTENANCE SERVICES

Refer to the "Maintenance Schedules" (Figures 1 and 2) for the schedules of time and/or mileage intervals. The following text and illustrations give the details of the required maintenance services.

Engine Oil

ALWAYS USE SG QUALITY ENERGY CONSERVING OILS OF PROPER VISCOSITY. The "SG" designation may be shown alone or in combination with other designations such as SG/CC, SG/CD, SF, CC, etc.

Engine Oil Filter

NOTICE: To prevent leakage of small 75 mm oil filters such as PF, PF-47, PF-51, PF-1225, etc., it is very important that the installation instructions listed below are closely followed.

Remove old filter by turning counterclockwise. Clean the gasket sealing area on the engine oil filter mounting surface. (If engine has an adapter base, make sure threaded nipple or bolt is properly torqued.)

Lightly oil the oil filter gasket with clean oil and install filter. After the oil filter gasket contacts the oil filter mounting surface, tighten ¾ to 1 full turn.

With engine oil at proper level, run engine three minutes and thoroughly check filter area for leaks.

Engine Oil Viscosity

Figure 3

Engine oil viscosity (thickness) has an effect on fuel economy and cold-weather operation (starting and oil flow). Lower viscosity engine oils can provide better fuel economy and cold-weather performance; however, higher temperature weather conditions require higher viscosity engine oils for satisfactory lubrication.

NOTICE: Using oils of any viscosity other than those viscosities recommended could result in engine damage.

When choosing an oil, consider the range of temperature the vehicle will be operated in before the next oil change. Then, select the recommended oil viscosity from the "Engine Oil Viscosity Recommendation" (Figure 3).

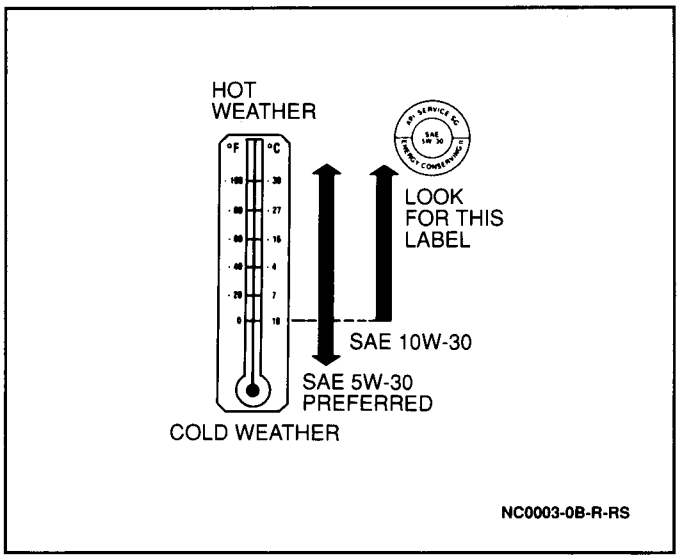

Figure 3 Engine Oil Viscosity Recommendation

Other Required Services Each Time Oil is Changed

Engine Accessory Drive Belt Inspection — Inspect for cracks, fraying, wear and proper tension. Adjust or replace as needed. Refer to SECTION 1B for A/C compressor drive belt service procedures and specifications. Refer to SECTION 3B1 for power steering pump drive belt service procedures and specifications. Refer to SECTION 6B for coolant pump drive belt service procedures and specifications. Refer to SECTION 6D3 for the generator drive belt service procedures and tension specifications.

Automatic Transmission Fluid Level — Maintain level within operating range on the fluid level indicator. Refer to SECTION 7A.

Manual Transmission Fluid Level — Check fluid level and add as required. Refer to SECTION 7B.

Transfer Case Fluid Level — Check fluid level and add as required. Refer to SECTION 7D.

Engine Coolant Level (ECL) and Condition — Check the ECL in the coolant reservoir and add if necessary. If an overheating condition has occurred, check the ECL in the radiator when the engine is cold.

Inspect the coolant and replace if dirty or rusty.

Brake Systems Inspection — Inspect pipes and hoses for proper hookup, binding, leaks, cracks, chafing, etc. For convenience, the following should be done when wheels are removed for rotation: inspect disc brake pads for wear and the surface condition of the rotors. Also, inspect drum brake linings for wear and cracks, inspect other brake parts, including drums, wheel cylinders, parking brake, etc., at the same time. Check parking brake adjustment.

Inspect brakes more often if habit or conditions result in frequent braking.

Locking Front Hubs — Inspect locking hubs for correct operation. Repair or replace as necessary. Both hubs must operate correctly for the front axle to power the front wheels. Refer to SECTION 3C.

Steering and Suspension Inspection — Inspect front and rear suspension and steering system for damaged, loose or missing parts, signs of wear or lack of lubrication.

Exhaust System Inspection — Inspect complete system including three way catalytic converter (TWC). Inspect body near the exhaust system. Look for broken, damaged, missing or out of position parts as well as open seams, holes, loose connections or other conditions which could cause a heat buildup in the floor pan or allow exhaust fumes to seep into the trunk or passenger compartment.

Throttle Linkage Inspection — Inspect for interference or binding, damaged or missing parts.

Windshield Washer Fluid Level — Check level in reservoir and add if necessary.

Hood Latch Operation — When opening the hood, note the operation of the secondary latch. It should keep hood from opening completely when primary latch is released. Make sure that the hood closes firmly.

Lighting Systems Operation — Check operation of license plate lamps, side marker lamps, headlamps (including high-beams), parking lamps, taillamps, brake lamps, turn signals, backup lamps, hazard warning flasher and interior lamps.

CHASSIS LUBRICATION

Lubricate transmission shift linkage. Lubricate parking brake cable guides, underbody contact points and linkage.

NOTICE: Do not lubricate the parking brake cables. Lubrication destroys the plastic coating on the cables.

Manual Transmission — Lubricate the clutch pedal bushing, clevis pin and clutch control cable ends every 7,500 miles (12 000 km) or every 12 months.

Lubeless Suspension and Steering Joints

This vehicle's suspension and steering joints do NOT require relubrication. There are no grease fittings at these joints.

TIMING BELT REPLACEMENT

Inspect and adjust if necessary at 60,000 miles (100 000 km) and then every 30,000 miles (48 000 km). Failure to replace the timing belt may result in serious engine damage. Refer to SECTION 6A1.

CLUTCH PEDAL FREE TRAVEL INSPECTION/ADJUSTMENT

Adjust clutch pedal linkage when there is little or no play. Check the play every 7,500 miles (12 000 km) or less. The clutch play should be checked at the clutch pedal and adjusted at the clutch release arm on the transmission. Refer to SECTION 7C.

SERVICES TO BE PERFORMED AT LEAST TWICE A YEAR

Brake Master Cylinder Reservoir Level — Check fluid as described in SECTION 5 and keep at proper level. A low fluid level can indicate a leak or worn disc brake pads which may have to be serviced.

Power Steering System Reservoir Level — Check and keep at proper level (if equipped). Refer to SECTION 3B1.

Rear Axle and Front Axle (Four-Wheel Drive) — Check fluid level and add if needed. To check fluid, raise and suitably support vehicle. Refer to SECTION 0A. Keep vehicle level. Clean dirt or foreign material from around oil/level filler plug opening before removing the filler plug. Maintain fluid level from flush with bottom of opening to no lower than 6 mm (0.25 inch) below opening. Refer to SECTION 4C for front axle housing oil/level filler plug torque specifications or SECTION 4B for rear axle housing oil/level filler plug torque specifications.

Weatherstrip Lubrication — Apply dielectric silicone grease GM P/N 12345579, or equivalent. Apply a thin film using a clean cloth.

SERVICES TO BE PERFORMED AT LEAST ONCE A YEAR

Parking Brake and Automatic Transmission Park Mechanism Operation — Before checking the holding ability of the parking brake and automatic transmission park mechanism, park on a steep hill with room for movement in the downhill direction.

CAUTION: To reduce the risk of personal injury or property damage, be prepared to depress the brakes promptly if the vehicle begins to move.

To check the parking brake, with the engine running and transmission in the "N" (neutral) position, slowly remove foot pressure from the brake pedal until the vehicle is held by only the parking brake.

To check the automatic transmission park mechanism holding ability, release all brakes after shifting the transmission into the "P" (park) position.

Park/Neutral Position (PNP) Switch (Automatic Transmission) and Clutch Pedal Position (CPP) Switch (Manual Transmission) Operation

CAUTION: Before performing the following PNP switch or CPP switch checks, be sure to have room around the vehicle in case of movement. Then, firmly depress the brake pedal and apply the parking brake. Do not use the accelerator pedal. If the engine starts, be ready to turn off the ignition promptly. Take these precautions because the vehicle could move without warning and possibly cause personal injury or property damage.

On automatic transmission equipped vehicles, try to start the engine in each gear. The starter should crank only in "P" (park) or "N" (neutral).

On manual transmission equipped vehicles, place the gearshift control lever in "N" (neutral), push the clutch halfway in and try to start the engine. The starter should only crank when the clutch pedal is fully depressed.

Ignition Lock Cylinder Operation — While the vehicle is parked, try to turn the ignition key to "LOCK" in each gear range. The key should turn to "LOCK" only when the manual selector lever is in "P" (park, automatic transmission equipped vehicles only). On manual transmission equipped vehicles, try to turn the key to "LOCK" without depressing the lock cylinder face. The key should turn to "LOCK" only with the lock cylinder face pressed in. On all vehicles, the key should only come out in "LOCK."

Brake Transmission Shift Interlock (Automatic Transmission Equipped Vehicles)

CAUTION: Before performing the following brake transmission shift interlock check, place the vehicle on a level surface. Be sure to have room around the vehicle in case of movement. Take these precautions because the vehicle could move without warning and possibly cause personal injury or property damage.

Turn the ignition switch to the "ON" position, but do not start the engine. Without depressing the brake pedal, try to move the manual selector out of the "P" (park) position using normal effort. If the selector moves out of the "P" (park) position, the brake transmission shift interlock system requires repair. Refer to SECTION 7A.

Seatback Latch Operation — Be sure seatbacks latch firmly.

Lap and Shoulder Belts Condition and Operation — Inspect belt system, including webbing, buckles, latch plates, retractor, guide loops and anchors.

Movable Head Restraint Operation (if equipped) — Make sure movable head restraints stay in desired position.

Seatback Recliner Operation — Make sure the recliner is holding by pushing and pulling on top of the seatback while it is reclined.

Spare Tire and Jack Storage — Be alert to rattles in rear of vehicle. Make sure the spare tire, all jacking equipment, any tire inflator and any covers or doors are securely stowed at all times. Oil jack ratchet or screw mechanism after each use.

Key Lock Service — Lubricate all key lock cylinders except the glove box lock.

Body Lubrication Service — Lubricate all body door hinges, including the hood, fuel door and tailgate hinges and latches, the glove box door and any folding seat hardware.

Underbody Flushing — At least every spring, corrosive materials used for ice and snow removal or dust control should be flushed from the underbody using plain water. Take care to thoroughly clean any areas where mud or other debris can collect. Sediment packed in closed areas of the vehicle should be loosened before being flushed.

Engine Cooling System — Inspect coolant and freeze protection. If dirty or rusty, drain, flush and refill with new coolant. Keep coolant at the proper mixture for proper freeze protection, corrosion inhibitor level and best engine operating temperature. Refer to "Recommended Fluids and Lubricants" later in this section or SECTION 6B. Inspect hoses and replace if cracked, swollen or deteriorated. Tighten hose clamps. Clean outside of radiator and air conditioning condenser. Wash filler cap and neck. To help ensure proper operation, a pressure test of both the cooling system and the radiator cap is also recommended.

CONTINUATION OF SCHEDULED MAINTENANCE SERVICES

Throttle Body Fuel Injection (TBI) Unit Mounting Torque

Check torque of TBI unit mounting bolts and/or nuts. Refer to SECTION 6E2 for torque specifications.

Tire and Wheel Inspection and Rotation

Figure 4

Check tires for abnormal wear or damage. Also, check for damaged wheels. Pressure should be checked when the tires are cold (include spare). Maintain pressures as shown in "Tire Pressure Specifications" later in this section, or the tire placard on the driver's door lock pillar. To equalize wear and obtain maximum tire life, rotate as shown in the "Recommended Tire Rotation Pattern" (Figure 4). If irregular or premature wear exists, check wheel alignment.

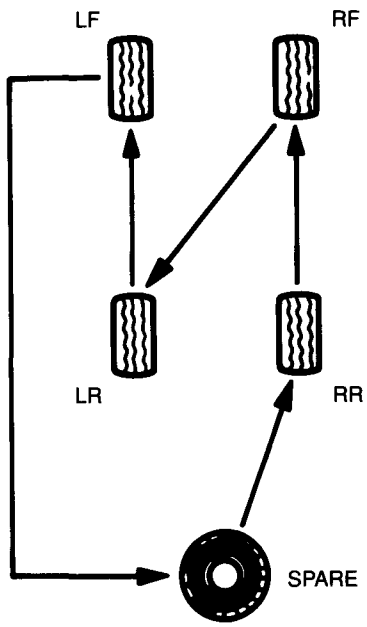

A

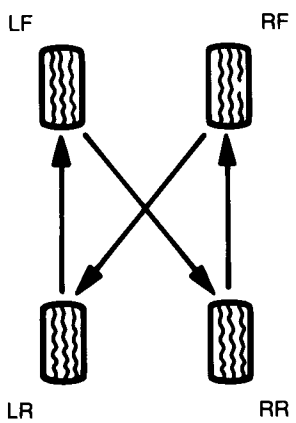

B

A WITH FULL-SIZE SPARE WHEEL

B IF SPARE WHEEL DOES NOT MATCH YOUR OTHER WHEELS

NC1004-0B-JT-RS

Figure 4 Recommended Tire Rotation Pattern

Inspect the brake system while the tires and wheels are removed. Refer to "Brake Systems Inspection" under "Other Required Services Each Time Oil is Changed."

Cooling System Service

Drain, flush and refill system with new coolant. Refer to "Recommended Fluids and Lubricants" later in this section or SECTION 6B.

Transmission/Transfer Case Service

Inspect for leaks and proper fluid level.

For the manual transmission and the transfer case, change the oil every 7,500 miles (12 000 km) and then every 15,000 miles (24 000 km) or 15 months if the vehicle is mainly driven under one or more of the following conditions:

- In heavy city traffic where outside temperatures regularly reach 32° C (90° F) or higher.
- In hilly or mountainous terrain.
- Frequent trailer pulling.
- Uses such as found in taxi, police vehicle or delivery service.

If the vehicle is not driven under any of these conditions, replace the manual transmission and the transfer case oils initially at 7,500 miles (12 000 km) and then at 30,000 miles (48 000 km) or 30 month intervals. Refer to SECTION 7B and SECTION 7D.

For automatic transmission, change both the fluid and service the fluid filter screen every 15,000 miles (24 000 km) or 15 months if the vehicle is mainly driven under one or more of the following conditions:

- In heavy city traffic where outside temperatures regularly reach 32° C (90° F) or higher.
- In hilly or mountainous terrain.
- Frequent trailer pulling.
- Uses such as found in taxi, police vehicle or delivery service.

If the vehicle is not used under any of these conditions, change both the fluid and service the fluid filter screen every 100,000 miles (160 000 km). Refer to SECTION 7A.

Front and Rear Axle Housing

For the front and rear axle housings, replace the gear lubricant every 7,500 miles (12,000 km) if the vehicle is mainly driven under one or more of the following conditions:

- In heavy city traffic where outside temperatures regularly reach 32° C (90° F) or higher.
- In hilly or mountainous terrain.
- Frequent trailer pulling.
- Uses such as found in taxi, police vehicle or delivery service.

If the vehicle is not driven under any of these conditions, the gear lubricant should initially be replaced at 7,500 miles (12 000 km) and then every 30,000 miles (48 000 km).

Propeller Shafts and U-Joints

Inspect for looseness and damage. Inspect every 15,000 miles (24 000 km) or 15 months. Inspect more often if vehicle is used off-road or for pulling a trailer. Refer to SECTION 4A.

Wheel Bearings

Inspect every 15,000 miles (24 000 km) or 15 months. Inspect for wear and proper adjustment. Relubricate bearings if lubricant is contaminated. Refer to SECTION 3C for front suspension adjustment procedures. Refer to SECTION 3D for rear suspension adjustment procedures.

Spark Plug Replacement

Replace spark plugs with type listed in this section. Refer to "Maintenance Items" later in this section.

Distributor Cap and Secondary (Spark Plug) Wire Inspection

Inspect distributor cap and rotor for cracks, erosion of terminals, and cleanliness. Clean wires and inspect for burns, cracks or other damage. Check the wire boot fit at the coil and at the spark plugs. Replace the wires as needed. Operation in extreme cold and/or on salted roads may require more frequent replacement.

Exhaust Gas Recirculation (EGR) System Service

Perform the EGR system checks every 50,000 miles (80 000 km). Check EGR for proper operation. Refer to SECTION 6E2.

Air Cleaner (ACL) Filter Replacement

Replace the ACL filter every 30,000 miles (48 000 km) or 36 months, whichever comes first. Replace more often under dusty conditions. Check the filter for dirt or damage.

Engine Timing Check

Adjust timing to underhood label specifications. Refer to SECTION 6E2.

Wiring Harness and Connectors

Inspect the underhood wiring harness for loose connections, chafed wires and damage at 60,000 miles (100 000 km) or 60 months. Inspect more often if the vehicle is used extensively for off-road driving.

Fuel Tank, Cap and Pipes/Hoses Inspection

Inspect fuel tank, cap and pipes/hoses for damage or leaks. Inspect fuel injection assembly. Inspect fuel cap gasket for an even filler neck imprint or any damage. Replace parts as needed.

Positive Crankcase Ventilation (PCV) System Inspection

Inspect system for proper function. Replace any worn, plugged or collapsed hoses or damaged seals. Replace PCV valve if needed. Use pipe sealing tape on threads when installing valve into intake manifold.

Evaporative Emission (EVAP) Canister Inspection

Inspect EVAP canister for internal damage or clogging. Clean with compressed air or replace as needed.

Engine Idle Speed Adjustment

Check idle speed and adjust to factory specifications. Refer to SECTION 6E.

Fuel Filter

Replace fuel filter every 30,000 miles (50 000 km).

RECOMMENDED FLUIDS AND LUBRICANTS

Engine Oil — GM Goodwrench motor oil, or equivalent, for API service SG of recommended viscosity. Refer to Engine Oil Viscosity Recommendation (Figure 3).

Engine Coolant — Mixture of water and ethylene glycol base antifreeze conforming to GM Specification 1825M, GM P/N 1052753, or equivalent.

Hydraulic Brake System — Hydraulic brake fluid GM P/N 1052535, or equivalent, DOT-3 brake fluid.

Parking Brake Cable Guides, Underbody Contact Points — Chassis lubricant meeting requirements of NLGI Grade 2, Category LB or GC-LB, GM P/N 1052497, or equivalent.

Power Steering System — DEXRON® II automatic transmission fluid GM P/N 1051855, or equivalent.

Automatic Transmission — DEXRON® II automatic transmission fluid GM P/N 1051855, or equivalent.

Manual Transmission — Synthetic 75W-90 GL4 lubricant GM P/N 12345871, or equivalent.

Transfer Case — Synthetic 75W-90 GL4 lubricant GM P/N 12345871, or equivalent.

Key Lock Cylinders (except glove box door lock) — Lubricate with multi-purpose lubricant GM P/N 12345120, or equivalent, or synthetic SAE 5W-30 engine oil.

Weatherstrips — Dielectric silicone grease GM P/N 12345579, or equivalent.

Chassis Lubrication — Chassis lubricant meeting requirements of NLGI Grade 2, Category LB or GC-LB, GM P/N 1052497, or equivalent.

Front and Rear Axle Housings — Synthetic gear lubricant GM P/N 12345836, or equivalent.

Windshield Washer Solvent — GM "Optikleen" washer solvent GM P/N 1051515, or equivalent.

Hood Latch Assembly and Pivots — Engine oil.

Hood Latch Assembly Release Pawl — Chassis lubricant meeting requirements of NLGI Grade 2, Category LB or GC-LB (GM P/N 1052497), or equivalent.

Wheel Bearings — Wheel bearing lubricant GM P/N 1051344, or equivalent.

Fuel Door Hinge, Hood and Door Hinges and Rear Door Hinges — Engine oil.

MAINTENANCE ITEMS

Air Cleaner (ACL) Filter ..... AC Type A1138C
Engine Oil Filter ..... AC Type PF53
Positive Crankcase Ventilation (PCV) Valve 96058079
Spark Plugs and Gap
- AC Type ..... R43XLS 0.7 - 0.8 mm (0.028 - 0.032 in.)
- NGK Type ..... BPR5ES 0.7 - 0.8 mm (0.028 - 0.032 in.)
- Nippondenso Type ..... W16EXR-U 0.7 - 0.8 mm (0.028 - 0.032 in.)

APPROXIMATE FLUID CAPACITIES

Air Conditioning R-12 ..... 0.6 kg (1.3 lb.)
Engine Crankcase
- With Filter Change ..... 4.2 liters (4.5 qt.)
- Without Filter Change ..... 4.0 liters (4.2 qt.)

Fuel Tank ..... 42.0 liters (11 gal.)
Transmission
- Automatic
  - Drain and Refill ..... 2.8 liters (2.9 qt.)
- Manual
  - Drain and Refill ..... 1.5 liters (1.6 qt.)

Transfer Case ..... 1.7 liters (1.8 qt.)
Front Axle Housing ..... 1.1 liters (1.2 qt.)
Rear Axle Housing ..... 2.2 liters (2.3 qt.)
Engine Coolant Level (ECL)
- Automatic Transmission ..... 5.2 liters (5.5 qt.)
- Manual Transmission ..... 5.3 liters (5.6 qt.)

ADJUSTABLE BELT TENSION SPECIFICATIONS

Application	Deflection mm (in.)	Force Exerted Kg (lb.)
Generator	5-8 (0.20 - 0.32)	10 (22)
Coolant Pump	5-8 (0.20 - 0.32)	10 (22)
A/C Compressor	5-6.5 (0.20 - 0.25)	10 (22)
Power Steering Pump	6-9 (0.24 - 0.35)	10 (22)

TIRE PRESSURE SPECIFICATIONS

P205/75R15 ..... 160 kPa (23 psi)
P195/75R15 ..... 160 kPa (23 psi)
Spare ..... 160 kPa (23 psi)

SECTION 0C

VIBRATION DIAGNOSIS

NOTICE: When fasteners are removed, always reinstall them at the same location from which they were removed. If a fastener needs to be replaced, use the correct part number fastener for that application. If the correct part number fastener is not available, a fastener of equal size and strength (or stronger) may be used. Fasteners that are reused, and those requiring thread-locking compound, will be called out. The correct torque values must be used when installing fasteners that require them. If the above procedures are not followed, parts or system damage could result.

CONTENTS

General Description 0C-1
Vibration 0C-1
Diagnosis 0C-1
Reed Tachometer 0C-1
Classifying a Vibration Complaint 0C-2
Road Test 0C-3
Vehicle Speed Sensitive 0C-3
Engine Speed Sensitive 0C-4
Torque Sensitive 0C-4
Jounce or Load Sensitive 0C-4
On-Vehicle Service 0C-4
Engine Speed Sensitive Only 0C-4
Vehicle Speed Sensitive Only 0C-4
Torque and Vehicle Speed Sensitive 0C-5
Torque and Engine Speed Sensitive 0C-5
Propeller Shaft 0C-6
Propeller Shaft Runout 0C-6
Propeller Shaft Balance 0C-6
Universal Joints 0C-6
Driveline Angles 0C-6
Special Tools 0C-7

GENERAL DESCRIPTION

VIBRATION

Among the problems encountered in the development and servicing of a vehicle, vibration conditions are perhaps the most difficult to identify and correct. This difficulty arises since the vibration the driver feels or hears is generally not the source of the problem, but rather a component responding to some external excitation, e.g., the steering wheel may vibrate due to the unbalance of a wheel, the engine, etc. Also, the source of the excitation may be built into the operation of the vehicle, and therefore cannot be eliminated (vehicle is normal) as in the case of the power pulses from the engine.

Vibration is a back and forth oscillation that can be seen, heard or felt. A vibration results from a system (group of parts) responding to an alternating excitation, the resulting motion being transmitted either visually (can be seen), audibly (can be heard) or physically (can be felt) to the occupants. A vehicle imbalance or misalignment is usually the cause of a vibration.

There are three ways to correct a vibration:

1. Eliminate the source of the vibration.
2. Interrupt the transfer path.
3. Stop the responder from responding.

DIAGNOSIS

REED TACHOMETER

Figures 1 and 2

To aid in the diagnosis of vibrations, a reed tachometer can be used to identify the frequency of a rotational component with a repetitive vibration (Figure 1).

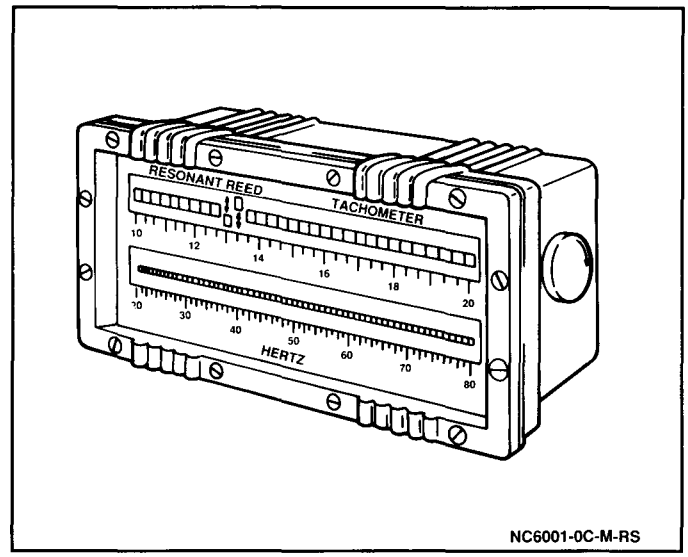

Figure 1 Reed Tachometer

The Biddle Frahm Reed Tachometer, or equivalent, measures vibration in cycles per minute (CPM). It consists of two rows of reeds. Each row is designed to vibrate at a particular frequency.

If you can match the rotational speed of a particular component with the frequency reading of the reed tachometer, you will know in which area to concentrate your efforts for repairs. Each component on a vehicle will vibrate at a natural frequency. This frequency acts like a fingerprint and will identify a component. For a particular component, this frequency will vary with vehicle speed and/or engine speed.

These frequency relationships exist for all vibrations that occur in a vehicle, and understanding these relationships can often solve difficult vibration problems.

The reed tachometer should be placed on the top of the instrument panel for ease of viewing and for effective pickup of a vibration.

Some components may induce more than one vibration at a given speed. These multiple vibrations are referred to as the order of vibration. The order of vibration refers to the number of disturbances created by one rotation of a component. For example, a tire with one heavy spot will produce one disturbance each rotation, a first order vibration (Figure 2). An oval-shaped tire will produce two disturbances each rotation, a second order vibration (Figure 2).

In general, the suspect component should be isolated to verify the cause of a vibration before parts are replaced. For a first order tire vibration, the responsible component can be anything which rotates at wheel and tire speed (i.e., wheels, tires, brake rotors, brake drums). These can be serviced or replaced with known good parts to identify the component causing the vibration. Once verified, the component can be balanced or replaced as necessary.

Using a reed tachometer in a vehicle will take some practice. One of the more important things to be aware of when using the reed tachometer for the first time is that the reeds are very sensitive and will pick up many low amplitude vibrations. These will appear as slight movements of many reeds, and do not correspond to any particular component. Reed movement that corresponds to a vibrating component will be greater in amplitude, traveling the full range of the viewing area. Reed vibration will also change as engine speed or vehicle speed changes.

CLASSIFYING A VIBRATION COMPLAINT

There are several excitation sources and many responding systems which may cause an annoying vibration. The first step is to identify the individual vibration complaints by systematically classifying them, during a road test, into one or more of the following categories: (1) vehicle speed sensitive, (2) engine speed sensitive, (3) torque sensitive, or (4) jounce (load) sensitive. In the process of classifying vibration problems in terms of these four sensitivity categories, you will find that many problems fit more than one of the categories. These four sensitivity categories can be combined into a list of five possible combinations into which a majority of vibration problems will fall.

A. Engine speed sensitive only.
B. Vehicle speed sensitive only.
C. Torque sensitive and vehicle speed sensitive.
D. Torque sensitive and engine speed sensitive.
E. Torque sensitive, vehicle speed sensitive and jounce sensitive.

Since each of the categories has specific vibrations associated with it, determining which category(ies) the vibration falls into will give direction to the proper area for analysis of the problem. This will eliminate many components that cannot be the cause, and will focus attention on only those items that can contribute to the specific condition encountered.

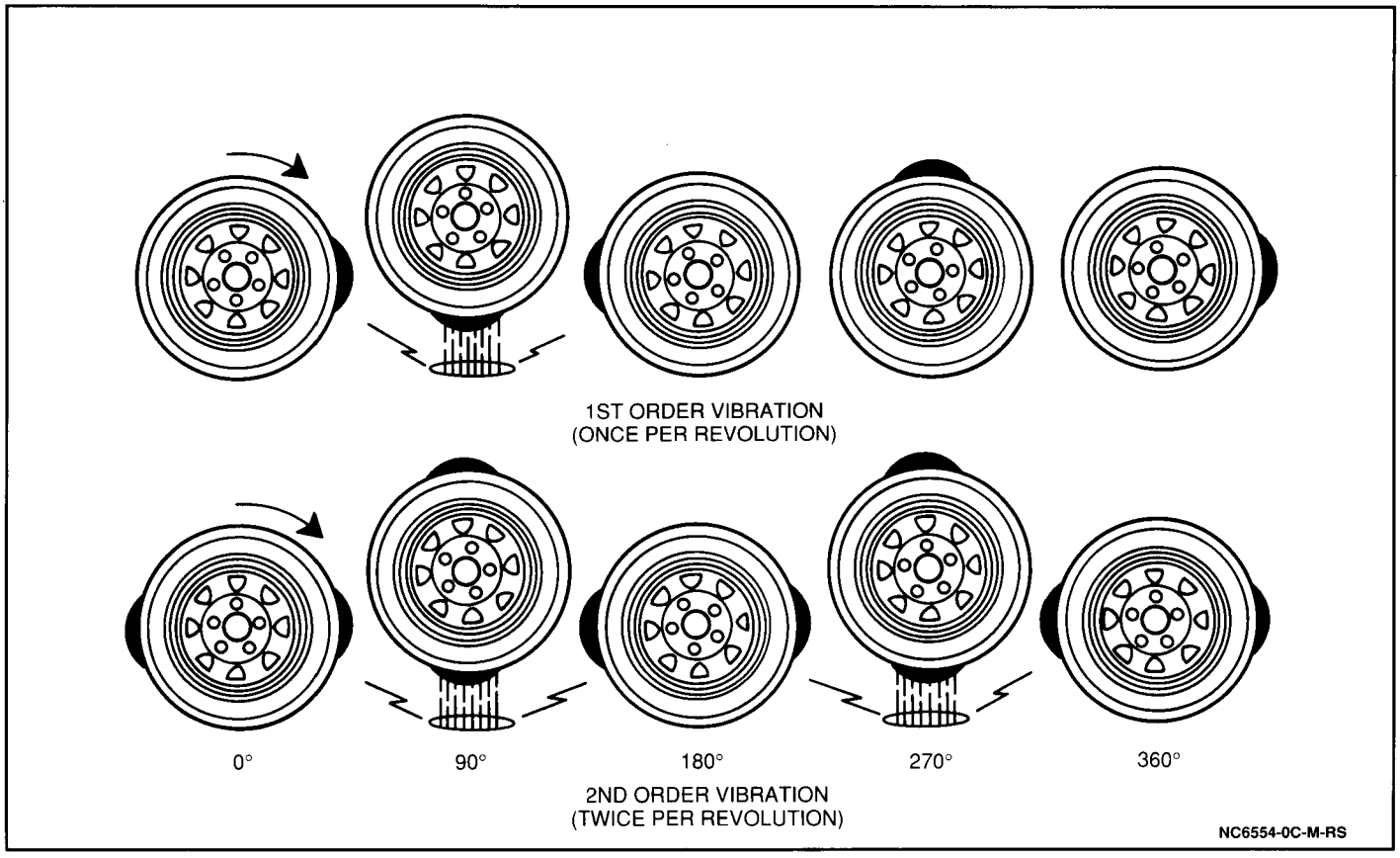

Figure 2 Order of Vibration

ROAD TEST

The road test is a very beneficial way to help the technician locate the vibration. If possible, the owner of the vehicle should be present for the road test to help point out the vibration complaint. The importance of riding in the vehicle with the owner cannot be overemphasized. If the condition is normal, and no corrective action is needed, the owner should be told so immediately. A normal condition can be demonstrated with other vehicles, pointing out that similar vehicles have the same condition. To help diagnose and isolate the source of a vibration, it is important to road test the vehicle and use a systematic approach in narrowing down the possible causes of a vibration.

Important

- Before road testing the vehicle, check the following:
  - A. Tires for correct inflation pressure. Refer to the tire placard affixed in the driver's door jamb for tire inflation specifications.
  - B. Vehicle for correct load conditions. Refer to the tire placard affixed to the driver's door jamb for vehicle load specifications.
  - C. Wheel nuts for proper torque. Refer to SECTION 3E.
  - D. Engine mounts for proper torque. Refer to SECTION 6A1.
  - E. All universal joint fasteners for tightness and correct torque. Refer to SECTION 4A.

- When did the vibration start?
- Did the vibration start after a repair?
  - Exhaust system
  - Undercoating
  - Tire repair or replacement
  - Wheel alignment
  - Engine repair
  - etc.

The following questions should be used as a basic outline during the road test. These questions will enable you to eliminate many components and focus attention on only those items that can be responsible for the vibration complaint.

- Is it a noise? Can it be heard as well as felt?
- What type of noise is it?
  - Buzz
  - Moan
  - Rattle
  - Squeak
  - Shudder
- Where can the vibration be felt?
  - Seat
  - Floor
  - Steering Wheel
- Does the vibration occur on smooth or rough roads?
- When does the vibration occur?

Four major component groups are usually the cause of, or are related to the vibration:

- Engine and mounts
- Clutch and transmission
- Tires, wheels, brake drums and rotors
- Propeller shaft and universal joints

The following list contains items that may cause vibration:

Inspect

1. Wheel alignment. Refer to SECTION 3A for wheel alignment specifications.
2. Tire treads for blisters or separations.
3. Tire or wheel for proper balance. Refer to SECTION 3E for specifications.
4. Wheel stud for excessive runout. Refer to SECTION 3 for specifications.
5. Brake drum or rotor for damage or deformation.
6. Tie rod ends for wear.
7. Trim height. Refer to SECTION 3 for trim height specifications.
8. Lower ball joints for wear or damage.
9. Wheel for excessive runout. Refer to SECTION 3E for wheel runout specifications.
10. Tire and wheel assembly for excessive loaded radial runout. Refer to SECTION 3 for radial runout specifications.
11. Universal joints for looseness or damage.

Coast Test

Drive the vehicle past the vibration speed, shift into neutral and coast back through the vibration speed. In this test two kinds of vibrations normally occur: a shaking or a buzzing. A shaking vibration is usually caused by tires or a wheel and brake drum/disc assembly problem. A buzzing vibration is usually caused by a driveline problem.

VEHICLE SPEED SENSITIVE

Tool Required:
TK00000 TECH 1 Modular Diagnostic System

Most vibration complaints are vehicle speed sensitive. The frequency of the excitation depends on the speed of the vehicle. To determine if a given problem is vehicle speed sensitive:

1. Connect a TECH 1 to the assembly line diagnostic link (ALDL) connector and display engine rpm. Refer to the TECH 1 operator's guide.
2. Drive the vehicle in high gear and record the vehicle speed and the engine speed at which the problem occurs.
3. Shift the vehicle into the next lowest gear and again record the vehicle speed and engine speed at which the problem occurs.
4. If the problem occurs at the same vehicle speed as when the vehicle was in high gear, the vibration is vehicle speed sensitive.

ENGINE SPEED SENSITIVE

Tool Required:
TK00000 TECH 1 Modular Diagnostic System

Another group of vibration complaints are engine speed sensitive. The frequency of the excitation depends only on the speed of the engine, independent of the vehicle speed. To determine if a given problem is engine speed sensitive:

1. Connect a TECH 1 to the assembly line diagnostic link (ALDL) connector and display engine rpm. Refer to the TECH 1 operator's guide.
2. Drive the vehicle in high gear and record the vehicle speed and the engine speed at which the problem occurs.
3. Shift the vehicle into the next lowest gear and again record the vehicle speed and engine speed at which the problem occurs.
4. If the problem occurs at the same engine speed as when the vehicle was in high gear, the vibration is engine speed sensitive.

TORQUE SENSITIVE

Tool Required:
TK00000 TECH 1 Modular Diagnostic System

A torque sensitive problem is one which increases in intensity as the torque (power) output of the engine increases. The intensity of the vibration increases as the throttle opening is increased. To determine if a given problem is torque sensitive:

1. Connect a TECH 1 to the assembly line diagnostic link (ALDL) connector and display engine rpm. Refer to the TECH 1 operator's guide.
2. Drive the vehicle in high gear and record the vehicle speed and the engine speed at which the problem occurs.
3. Observe the disturbance while varying the throttle position. That is, drive the vehicle with steady throttle, slowly increasing to heavy throttle by going uphill or applying the brakes while increasing the throttle opening and then slowly decreasing to minimum throttle by coasting through the disturbance.
4. If the disturbance becomes more severe as the throttle opening is increased, the vibration is torque sensitive.

JOUNCE OR LOAD SENSITIVE

A jounce or load sensitive problem is one which varies in intensity as the height of the vehicle changes with respect to the surface of the road. The intensity varies as the front struts are extended or compressed. To determine if a given problem is jounce or load sensitive:

1. Drive the vehicle a number of times, changing the load each time and observing the disturbance.
2. Drive the vehicle over a road that dips in such a way that it causes the front of the vehicle to move up and down in relation to the surface of the road. Keeping a constant throttle, observe the disturbance.
3. If the condition varies depending on the passenger load (or varies as the front of the vehicle moves up and down), the problem is jounce or load sensitive.

Jounce sensitive vibrations may also be torque or engine speed sensitive.

ON-VEHICLE SERVICE

ENGINE SPEED SENSITIVE ONLY

Problems in this category may be duplicated with the vehicle stopped and the transmission in neutral by running the engine at the speed which the disturbance was felt during the road test. All additional appraisals can thus be made under this "free engine" condition.

Engine speed sensitive problems can be due to the belt or engine-driven accessories (generator, A/C compressor, coolant pump, power steering pump). To isolate the offending component, first check the torque on all accessory bracket fasteners. Also, check the condition and tension of the drive belts. If any abnormal conditions are found, correct and retest for the vibration problem.

For generator fastener torque specifications and drive belt tension information, refer to SECTION 6D3. For A/C compressor fastener torque specifications and drive belt tension information, refer to SECTION 1B. For coolant pump fastener torque specifications and drive belt tension information, refer to SECTION 6B. For power steering pump fastener torque specifications and drive belt tension information, refer to SECTION 3B1.

If the vibration occurs after all accessory drive belts and fasteners have been properly adjusted and tightened, the accessory may have an internal problem such as bad bearings, bent shafts or imbalance. Repair or replace unsatisfactory parts until all accessories run smoothly.

If all accessories run smoothly and the vibration problem still exists, check for basic engine imbalance due to a defective or loose flywheel. For flywheel torque specifications, refer to SECTION 6A1. Also, on automatic transmission equipped vehicles, check for a defective or loose torque converter. For torque converter specifications, refer to SECTION 7A. If the vibration occurred after a major engine overhaul, the cause may be internal. For engine mechanical diagnosis, refer to SECTION 6.

A/C compressor problems can be diagnosed by turning the compressor off and on while the vibration condition is being experienced. Refer to SECTION 1B for air conditioning service procedures and proper drive belt tension specifications.

VEHICLE SPEED SENSITIVE ONLY

Figure 3

Vehicle speed sensitive vibration problems are usually related to tire and wheel imbalance or runout. Low speed vibrations, those occurring at less than 64 km/h (40 mph), are usually runout related. Highway speed vibrations, those speeds above 64 km/h (40 mph), can be caused by either imbalance or runout. For wheel and tire balancing procedures, refer to SECTION 3E. To investigate the possibility of wheel or tire runout, refer to SECTION 3. If a vibration remains after dynamic balancing, it can be caused by three things (Figure 3):

1. Tire runout.
2. Wheel runout.
3. Tire stiffness variations.

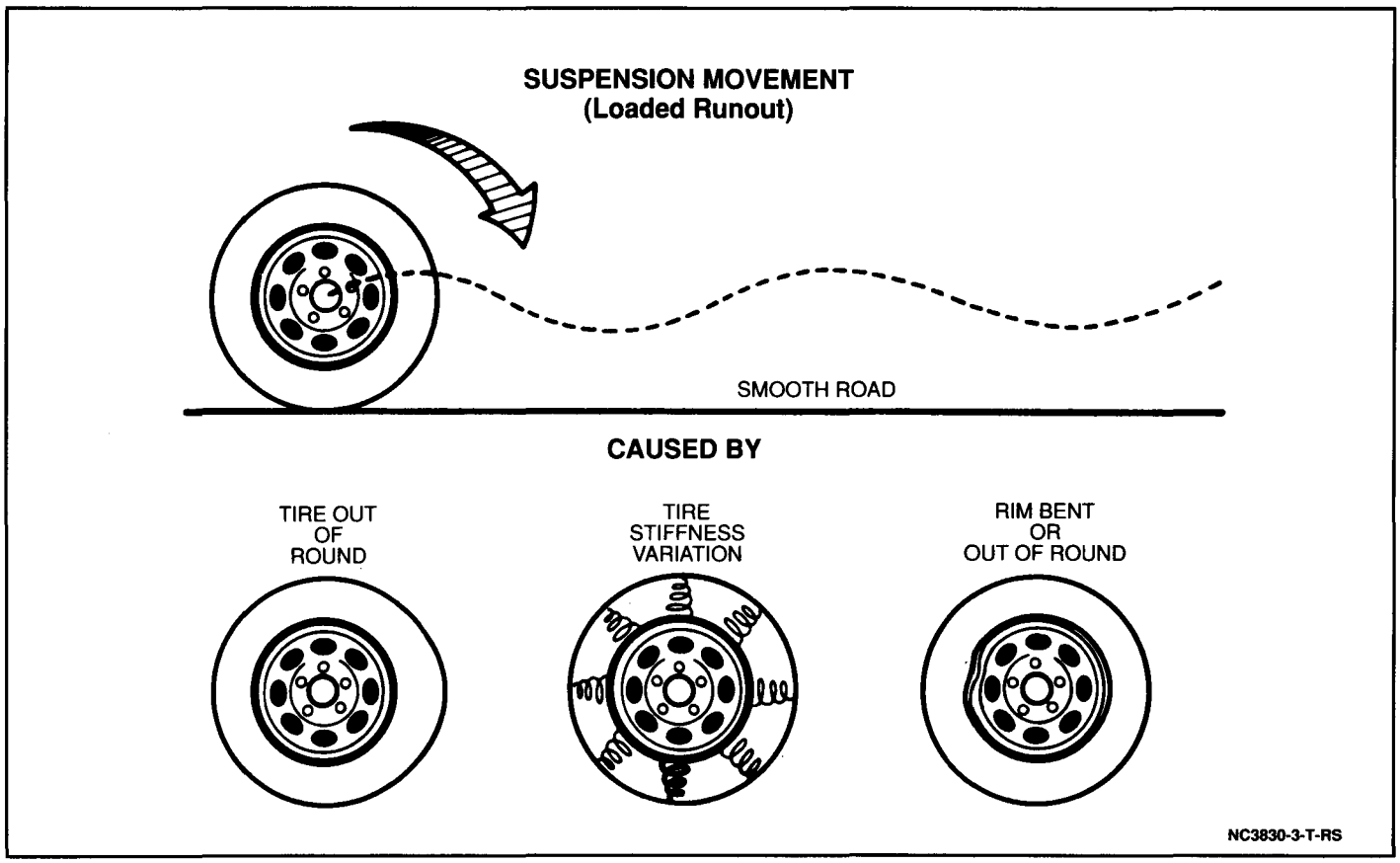

Figure 3 Causes of Vibrations

For service procedures concerning these three problems, refer to SECTION 3.

Another condition that is vehicle speed sensitive is a problem called "radial tire waddle." This condition is caused by a steel belt not being straight within the tire, or by excessive lateral runout of the tire or wheel. The vehicle can be road tested to determine which end of the vehicle has the faulty tire. If the waddle tire is on the rear, the rear end of the vehicle will shake from side to side or "waddle." From the driver's seat it feels as though someone is pushing on the side of the vehicle. For "radial tire waddle" service procedures, refer to SECTION 3.

TORQUE AND VEHICLE SPEED SENSITIVE

The only excitations which are both vehicle speed sensitive and torque sensitive (and possibly jounce sensitive) are disturbances caused by improper driveline angles which are a result of incorrect trim height or faulty universal joints. Check for the following:

- Worn or damaged universal joints. The universal joints should pivot smoothly. If universal joint binds or appears tight, replace the universal joint as an assembly. Refer to SECTION 4A for universal joint service procedures.
- Correct trim height. Refer to SECTION 3.

TORQUE AND ENGINE SPEED SENSITIVE

Vibration problems likely to be encountered in this class are as follows:

A. Engine-driven accessories (generator, A/C compressor, coolant pump, power steering pump).
   - Engine-driven accessories generally do not present a problem if all fasteners are tightened to specifications and their respective drive belts are adjusted to proper tension. Also check physical condition of the drive belts. Visually inspect each accessory to ensure that the brackets installed are complete and properly assembled.
   - For generator fastener torque specifications and drive belt tension information, refer to SECTION 6D3. For A/C compressor fastener torque specifications and drive belt tension information, refer to SECTION 1B. For coolant pump fastener torque specifications and drive belt tension information, refer to SECTION 6B. For power steering pump torque specifications and drive belt tension information, refer to SECTION 3B1.

B. Engine/transmission contacting the engine cradle or body.
   - Inspect the vehicle to be certain that neither the engine or transmission is contacting the engine cradle or body. If any irregularities are revealed during inspection, correct and retest on the road.

C. Exhaust system components.
   - Visually inspect the exhaust manifold, intermediate pipe/muffler, forward pipe/catalytic converter and tailpipe for sufficient clearance of all points, at least 13 mm (0.51-inch) in all directions. Be particularly certain that sufficient clearance exists in all directions during engine torque load.
   - A majority of exhaust system problems are due to "bound up" conditions. Loosen all joints in the entire system and rest the pipes on floor stands while each clamp and bolt is tightened to specifications. Refer to SECTION 6F for proper exhaust system torque specifications.
   - Be certain that the end of the tailpipe is below the surface of the rear bumper fascia.
   - After inspecting the exhaust system and making any corrections, retest on the road.

PROPELLER SHAFT

Driveline vibrations will generally be a high speed vibration associated with a "buzz" or a "shudder" occurring in the 72 to 88 km/h (45 to 55 mph) range. A majority of the vibration is experienced on either acceleration or deceleration. Driveline vibrations emanate from four general areas:

1. Propeller shaft balance.
2. Propeller shaft runout.
3. Driveline angles.
4. Joint phasing.

Most driveline vibrations that are associated with a "buzz" or a "shudder" type vibration will also have a high frequency reading on the reed tachometer. Refer to "Reed Tachometer" earlier in this section.

Propeller Shaft Runout

If a noise vibration is present in the vehicle driveline, the propeller shaft may be bent or out of round due to damage. Inspect the propeller shaft for dents or other damage. The propeller shaft and its components must be "true" or turning with an absolute minimum amount of lateral movement. Refer to SECTION 4A for propeller shaft runout specifications.

Propeller Shaft Balance

If balance weights are loose or missing, the propeller shaft must be balanced or replaced. Refer to SECTION 4A for propeller shaft balance check procedures. Excessive looseness or wear at the propeller shaft sliding yoke splines may also cause a propeller shaft to be unbalanced. For propeller shaft inspections procedures, refer to SECTION 4A. Inspect propeller shaft and universal joints for mud buildup, undercoating buildup or loose fasteners.

UNIVERSAL JOINTS

Faulty universal joints can be another cause for driveline vibrations. If a universal joint is suspected of producing a rattling or knocking noise, the universal joint may be worn or loose. Make a preliminary inspection by grasping the propeller shaft toward the end near the suspected universal joint and rotate it back and forth, then, move the propeller shaft in an up and down direction while feeling for any looseness. If the propeller shaft shows excessive movement, the universal joint should be removed and inspected for wear or damage. Refer to SECTION 4A for universal joint diagnosis and service procedures.

DRIVELINE ANGLES

Vibrations due to improper driveline angles are caused by either incorrect trim height or faulty universal joints. Incorrect trim height can lead to excessive universal joint angles. Refer to SECTION 3 for trim height specifications. Faulty universal joints can lead to incorrect driveline angles. Refer to SECTION 4A for universal joint angle measurement procedures.

SPECIAL TOOLS

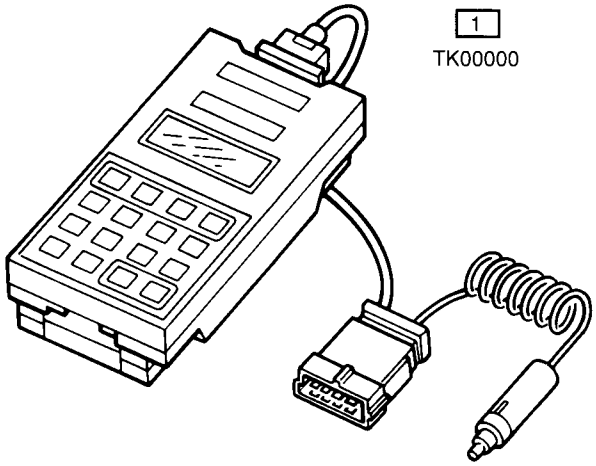

1 TECH 1 MODULAR DIAGNOSTIC SYSTEM

NC6010-0C-M-RS

SECTION 1

Heating and Air Conditioning

CONTENTS

Heater and Ventilation 1A-1
Air Conditioning 1B-1
Air Conditioning Compressor Service 1D-1

Geo

SECTION 1A

HEATER AND VENTILATION

NOTICE: When fasteners are removed, always reinstall them at the same location from which they were removed. If a fastener needs to be replaced, use the correct part number fastener for that application. If the correct part number is not available, a fastener of equal size and strength (or stronger) may be used. Fasteners that are not reused, and those requiring thread-locking compound, will be called out. The correct torque values must be used when installing fasteners that require them. If the above procedures are not followed, parts or system damage could result.

CONTENTS

General Description 1A-1
Heater System 1A-1
Controls 1A-1
Temperature Control Lever 1A-1
Mode Control Lever 1A-2
Blower Speed Selector Lever 1A-2
Fresh/Recirc Control Lever 1A-2
Air Distribution System 1A-2
Ducts and Outlets 1A-2
Ventilation 1A-5
Diagnosis 1A-5
Functional Test 1A-5
High or Low Heater Control Effort 1A-7
Blower Noise 1A-7
Excessive Heat 1A-7
Insufficient Heating or Defrosting 1A-7
On-Vehicle Service 1A-7
Blower Motor Case 1A-7
Blower Motor 1A-14
Blower Motor Resistor 1A-15
Blower Speed Selector Switch 1A-15
Control, Temperature and Fresh/ Recirculation Cables 1A-15
Heater Case 1A-17
Heater Core 1A-17
Heater Hoses 1A-19
Rear Floor Heat Duct 1A-19
Instrument Panel Outlets 1A-19
Specifications 1A-21
Fastener Torques 1A-21
Service Parts Information 1A-21

GENERAL DESCRIPTION

HEATER SYSTEM

The heater system delivers warm air to the passenger compartment once the engine reaches normal operating temperature. Outside air and air from the passenger compartment are passed through the heater core. Hot engine coolant heats this air, which travels to the passenger compartment via the heater system vents.

The temperature of the air delivered to the passenger compartment is regulated by the temperature control lever. This lever opens and closes the air mix door, controlling the amount of air which passes through and around the heater core.

CONTROLS

Temperature Control Lever

Figure 1

This lever controls the amount of air flow through and/or around the heater core, regulating the temperature of the air entering the vehicle.

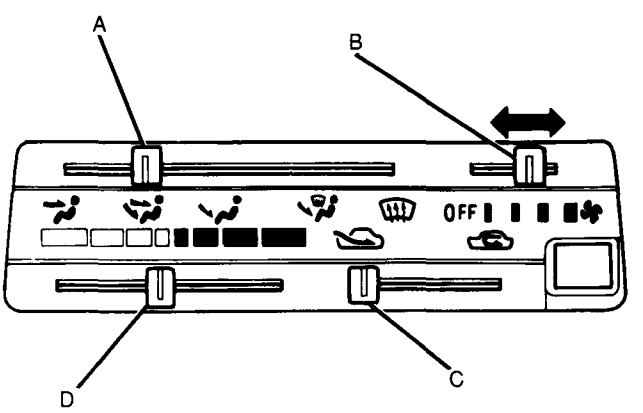

A MODE CONTROL LEVER
B BLOWER SPEED SELECTOR LEVER
C FRESH/RECIRC CONTROL LEVER
D TEMPERATURE CONTROL LEVER NC1900-1A-JT-RS

Figure 1 Heater Control Unit

Mode Control Lever

Figures 1 and 2

The air selector or mode control lever routes air through the various ducts in the passenger compartment. The air selector lever operates as follows:

1. Ventilation — In this position, air is discharged from the upper air outlets.
2. Bi-level — The air flow is divided between the upper instrument panel outlets and the floor.
3. Heat — In this position, air is directed toward the floor outlet, along with a small amount to the windshield.
4. Defrost — With the air selector lever in the "Defrost" position, most of the air is directed to the front windshield, with a small amount delivered to the side windows and to the floor.

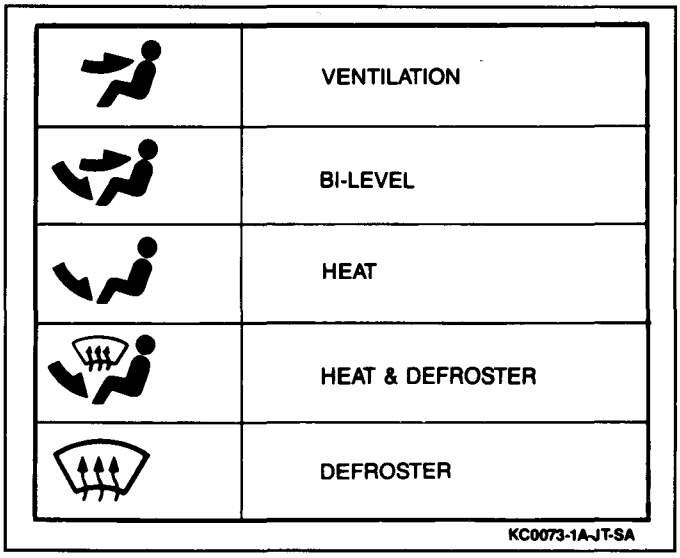

Figure 2 Heater/Ventilation System Air Flow Modes

Blower Speed Selector Lever

Figure 1

This lever operates the five-speed blower fan, controlling the volume of air reaching the passenger compartment.

Fresh/Recirc Control Lever

Figure 1

This lever is used to dictate whether fresh and/or recirculated air is admitted to the heater system.

AIR DISTRIBUTION SYSTEM

Refer to Figures 3 through 6 for details on the operation of the air distribution system.

DUCTS AND OUTLETS

Figure 7

Air flow control doors, operated by the mode control lever, route the air (either heated or unheated, fresh or outside) through the various ducts and to various outlets. Ducts include right, center and left instrument panel ducts, right and left side window defroster ducts, windshield defroster duct, a center floor duct, and rear seating area floor ducts located under the front seats. Outlets include right, center and left instrument panel outlets, right and left side window outlets, right and left windshield defroster outlets, and right and left rear seating area floor outlets.

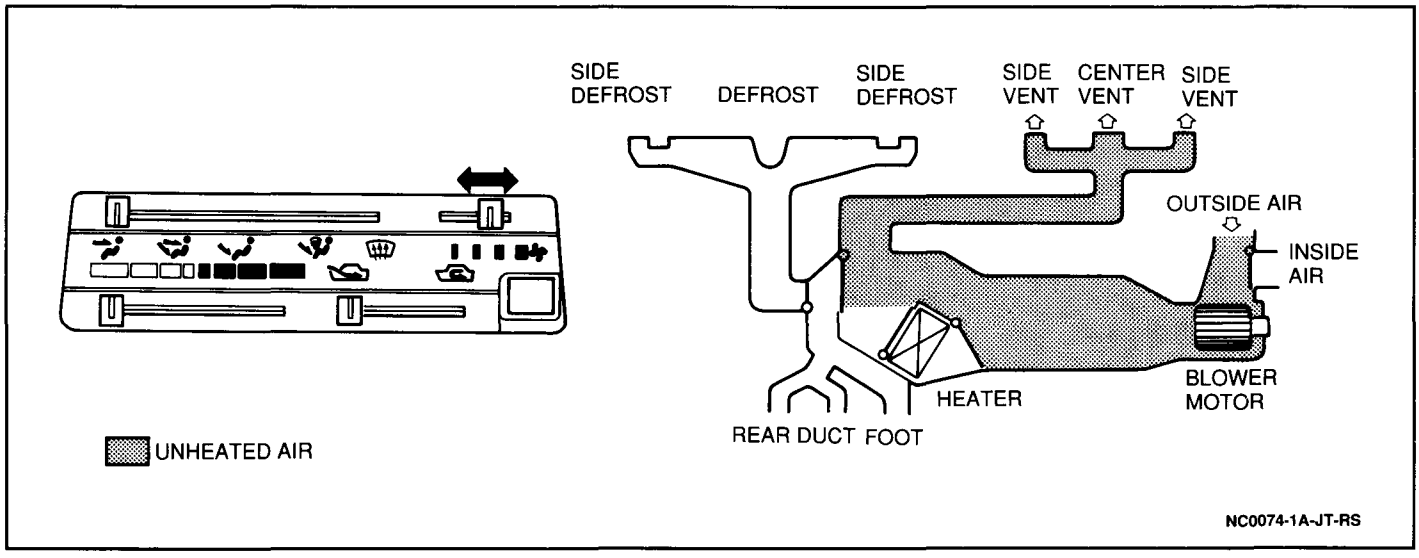

Figure 3 Forced Ventilation Operation

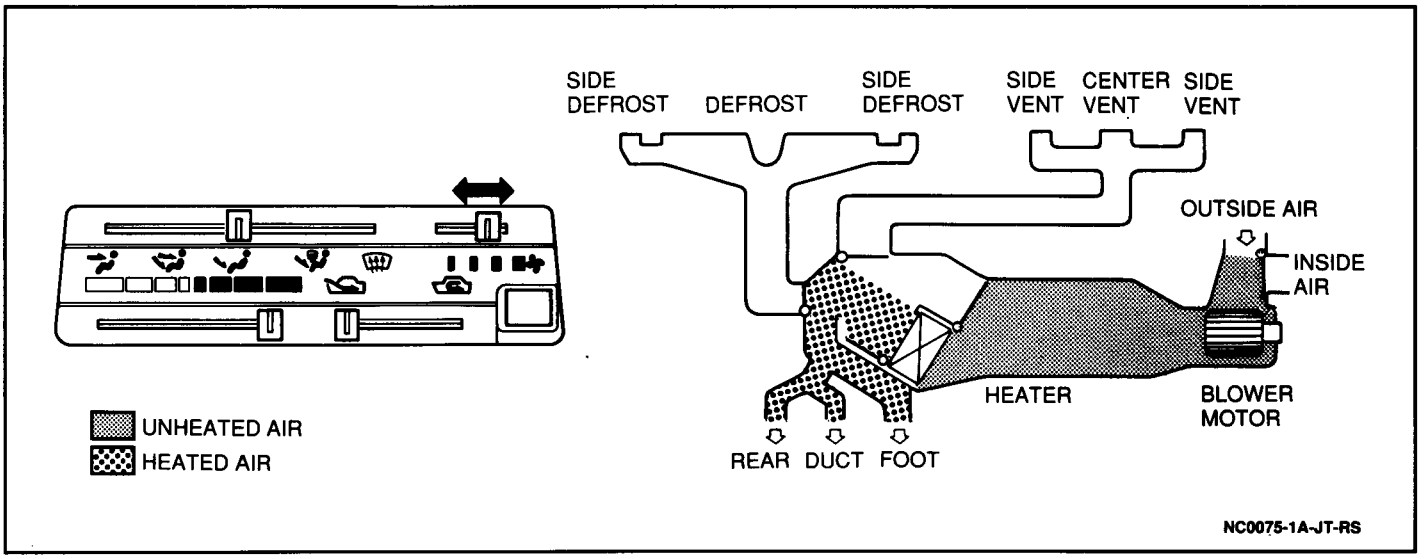

Figure 4 Outside Air-Introduced Heating

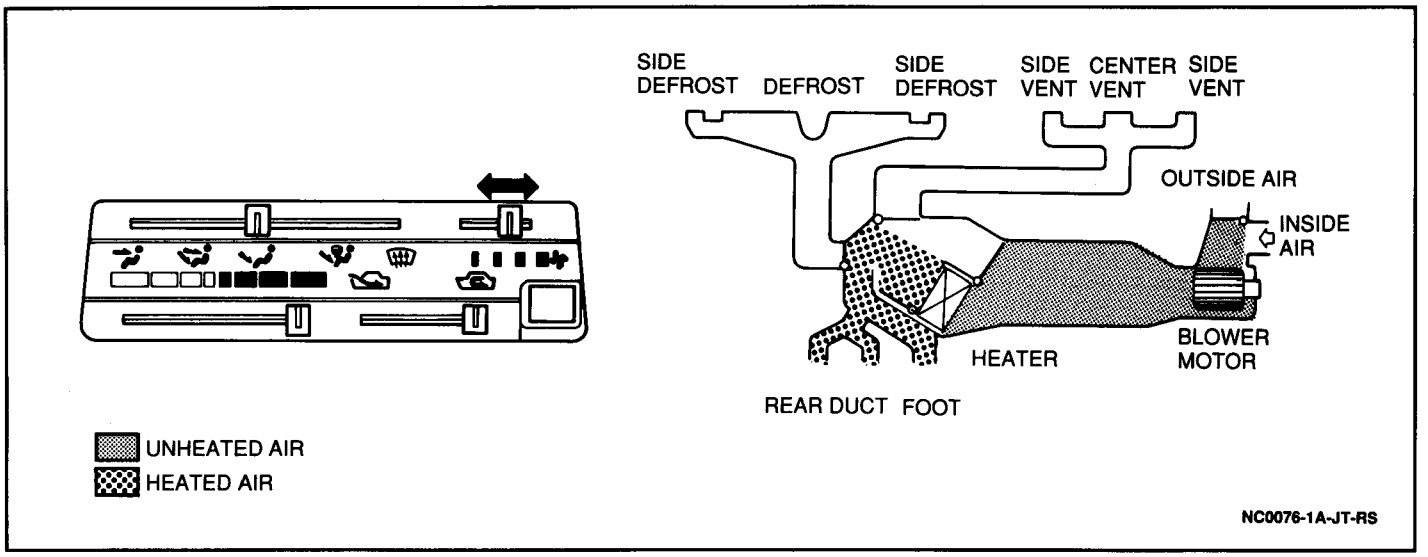

Figure 5 Inside Air-Recirculated Heating

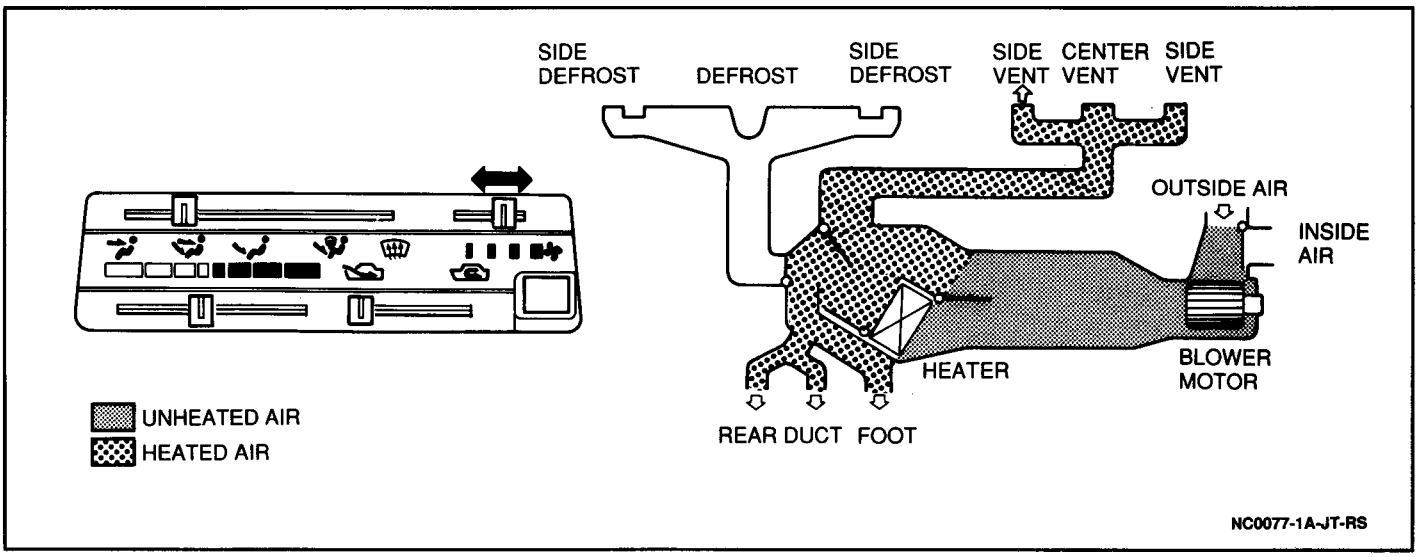

Figure 6 Bi-Level Operation

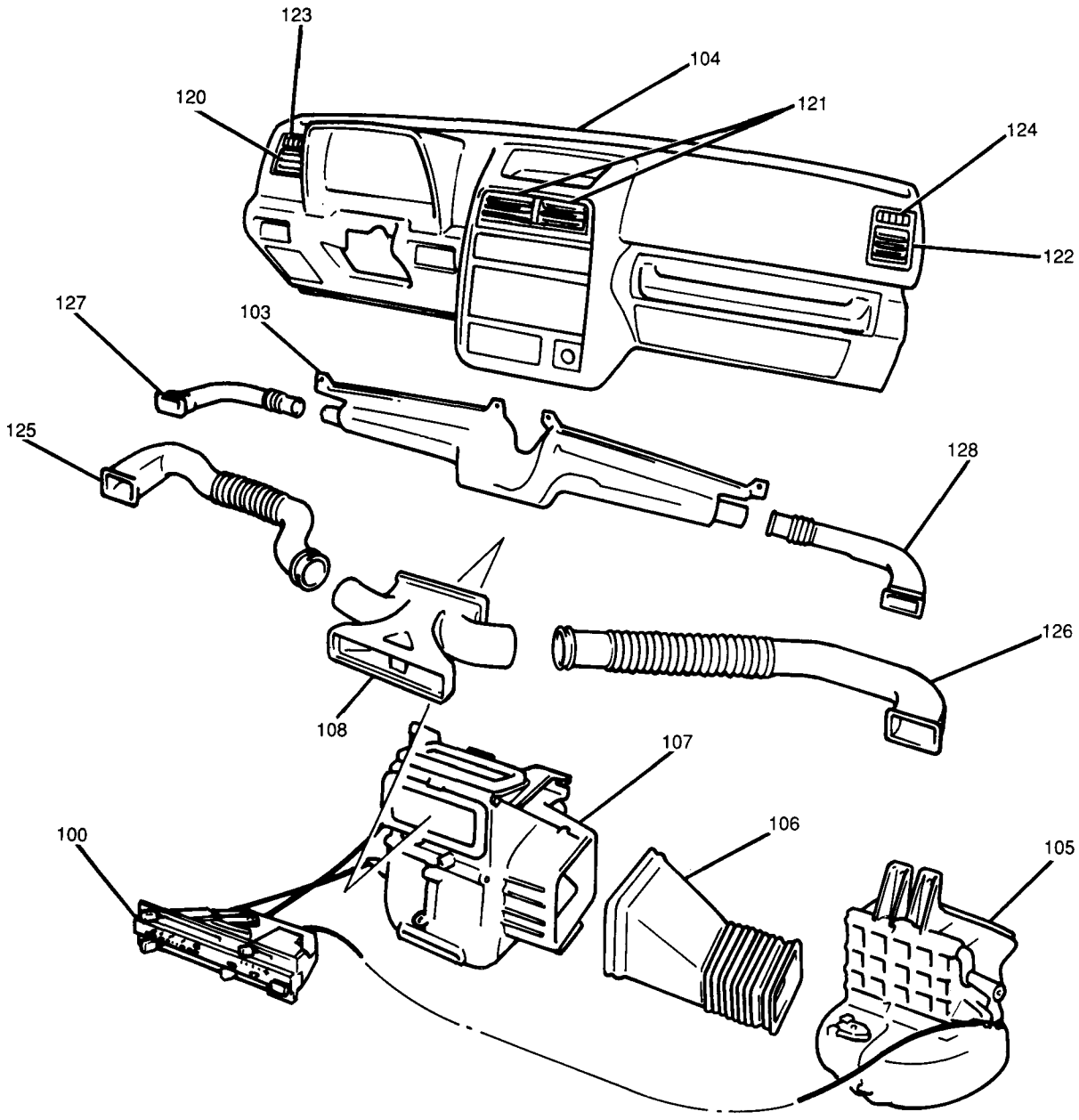

100 HEATER CONTROL UNIT
103 WINDSHIELD DEFROSTER DUCT
104 INSTRUMENT PANEL
105 BLOWER MOTOR CASE
106 BLOWER MOTOR CASE-TO-HEATER CASE DUCT
107 HEATER CASE
108 CENTER INSTRUMENT PANEL DUCT
120 LEFT INSTRUMENT PANEL OUTLET
121 CENTER INSTRUMENT PANEL OUTLETS
122 RIGHT INSTRUMENT PANEL OUTLET
123 LEFT SIDE WINDOW DEFROSTER OUTLET
124 RIGHT SIDE WINDOW DEFROSTER OUTLET
125 LEFT INSTRUMENT PANEL DUCT
126 RIGHT INSTRUMENT PANEL DUCT
127 LEFT SIDE WINDOW DEFROSTER DUCT
128 RIGHT SIDE WINDOW DEFROSTER DUCT

NC0100-1A-JT-RS

Figure 7 Heater and Ventilation System

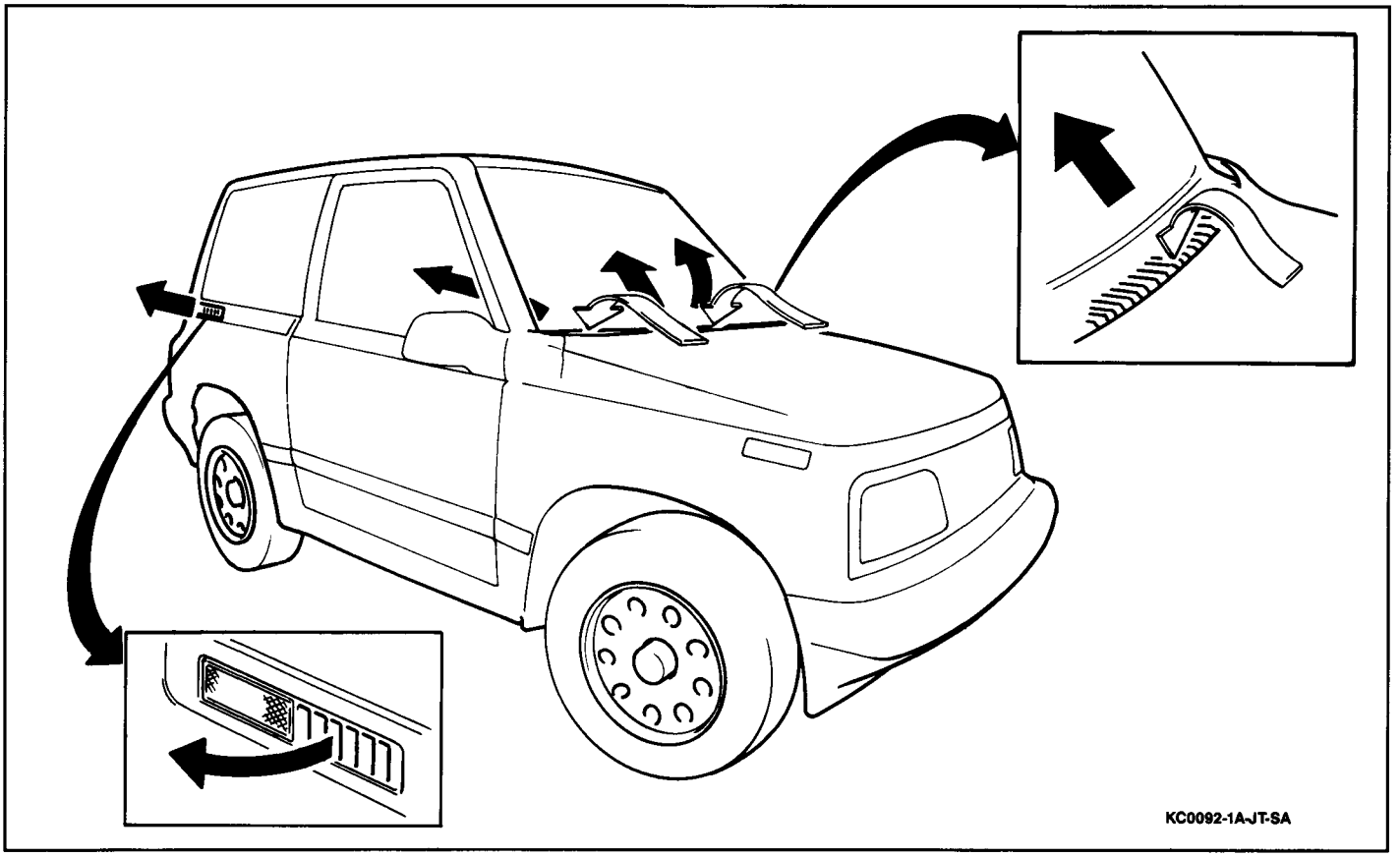

Figure 8 Body Ventilation

VENTILATION

Figure 8

The body ventilation system provides the passenger compartment with fresh, outside air which is routed through the same vents as the heated air. The primary fresh air intake is located within the cowl panel. Air is drawn into the interior of the vehicle from the intake grille and is drawn out from the ventilator outlets in the rear body sides.

DIAGNOSIS

FUNCTIONAL TEST

Figure 9

Before beginning service of the heater/ventilation system, perform this functional test. To obtain accurate test results, the engine must be idling and should be at normal operating temperature with the thermostat fully open. The upper radiator hose should feel hot to the touch when the thermostat is open.

1. Set the fresh/recirc control lever for outside air. Set the temperature lever all the way to cool (left). Set the blower speed selector switch to its highest speed.
2. Systematically move the mode control lever through its various positions, noting what vents the air is being expelled from at each setting. In the bi-level mode the air should come from the instrument panel vents and from the floor; in the defroster mode most of the air should be directed at the windshield, with some air directed at the floor vent, and so on.
3. Make sure that the points where the air is being directed correspond with the symbols above each mode control lever position. In addition, the air coming into the passenger compartment should be approximately the same temperature as the temperature outside the vehicle.
4. Set the temperature control lever all the way to hot (right). The temperature of the air entering the passenger compartment should now be much warmer than the air outside the vehicle.
5. Repeat steps 1 through 3 in this "heater" mode, noting what vents the air is being expelled from at each setting.
6. Move the blower speed selector lever from its highest setting gradually down to its lowest. There should be a noticeable decrease in the forcefulness with which air is being expelled from the vents, and a decrease in blower noise at each successive setting.

If the functional test indicates improper air delivery or a failure to shift modes when the shift lever is moved, refer to to Figure 9.

1 IMPROPER AIR DELIVERY OR NO MODE SHIFT

WITH THE VEHICLE ON AND THE ENGINE WARM, RUN THE FOLLOWING FUNCTIONAL CHECKS. CHECK CABLES FOR EXCESSIVE EFFORT OR BINDING.

MODE	TEMP LEVER	FAN SWITCH	BLOWER SPEED	POWER VENT OUTLET	HEATER OUTLET	DEFR. OUTLET	SIDE WINDOW DEFOGGER OUTLET
VENT	COLD	OFF	OFF	NO AIRFLOW	NO AIRFLOW	NO AIRFLOW	NO AIRFLOW
VENT	COLD	HIGH	HIGH	AMBIENT AIRFLOW	NO AIRFLOW	NO AIRFLOW	NO AIRFLOW
HEATER	COLD TO HOT	HIGH	HIGH	NO AIRFLOW	COLD TO HOT AIRFLOW	MINIMUM COLD TO HOT AIRFLOW	MINIMUM COLD TO HOT AIRFLOW
DEFROSTER	COLD TO HOT	HIGH	HIGH	NO AIRFLOW	MINIMUM COLD TO HOT AIRFLOW	COLD TO HOT AIRFLOW	MINIMUM COLD TO HOT AIRFLOW

CHECK DOOR AFFECTED AT UNIT FOR CABLE CONNECTED & CABLE SHEATH RETAINED

- OK → DISCONNECT CABLE AT DOOR &CHECK DOOR TRAVEL & EFFORT
  - NOT OK → REPAIR AS NECESSARY
  - OK → CHECK CABLE TRAVEL BY MOVING CONTROL LEVER
    - TRAVEL OK → REINSTALL & RECHECK
    - NO TRAVEL → CHECK CABLE ATTACHMENT AT CONTROL & CHECK FOR BROKEN CONTROL. REPAIR AS NECESSARY.
- NOT OK → REPAIR AS NECESSARY

NC0025-1A-JT-RS

Figure 9 Improper Air Delivery or No Shift Mode Diagnosis

HIGH OR LOW HEATER CONTROL EFFORT

Figure 10

For a diagnosis and remedy procedure for too much or too little heater control effort, refer to Figure 10.

BLOWER NOISE

Figures 11 and 12

A constant air rush noise is typical of all heater systems on high blower. Some systems may be noisier than others. If possible, check a similar vehicle to determine whether the noise is typical or excessive. For diagnosis of excessive blower noise, refer to Figures 11 and 12.

EXCESSIVE HEAT

Figure 13

To diagnose the cause of excessive heat, refer to Figure 13.

INSUFFICIENT HEATING OR DEFROSTING

Figures 14 and 15

The most likely causes of an insufficient heating complaint outside of the heater system include a low coolant level, a faulty thermostat, an obstruction to air circulation (often under the front seats) or an outside air leak into the passenger compartment. For diagnosis and remedy procedures for insufficient heating or defrosting, refer to Figures 14 and 15.

ON-VEHICLE SERVICE

BLOWER MOTOR CASE

Figure 16

Remove or Disconnect

1. Negative (-) battery cable.
2. Glove box door by removing two hinge pins.
3. Blower motor and resistor electrical connectors.
4. Fresh/recirc air control cable from blower motor case.
5. Wiring harness from guide brackets on blower motor case.
6. Blower motor case from vehicle by removing two upper retaining bolts.

Install or Connect

1. Blower motor case to vehicle; secure with two upper retaining bolts.

   Tighten

   - Blower motor case retaining bolts to 10 N·m (89 lb.in.).
2. Wiring harness to guide brackets on blower motor case.
3. Fresh/recirc air control cable to blower motor case.
4. Motor and resistor electrical connectors.
5. Glove box door; secure with two hinge pins.
6. Negative (-) battery cable.

   Tighten

   - Negative (-) battery cable-to-negative (-) battery terminal retainer to 15 N·m (11 lb.ft.).

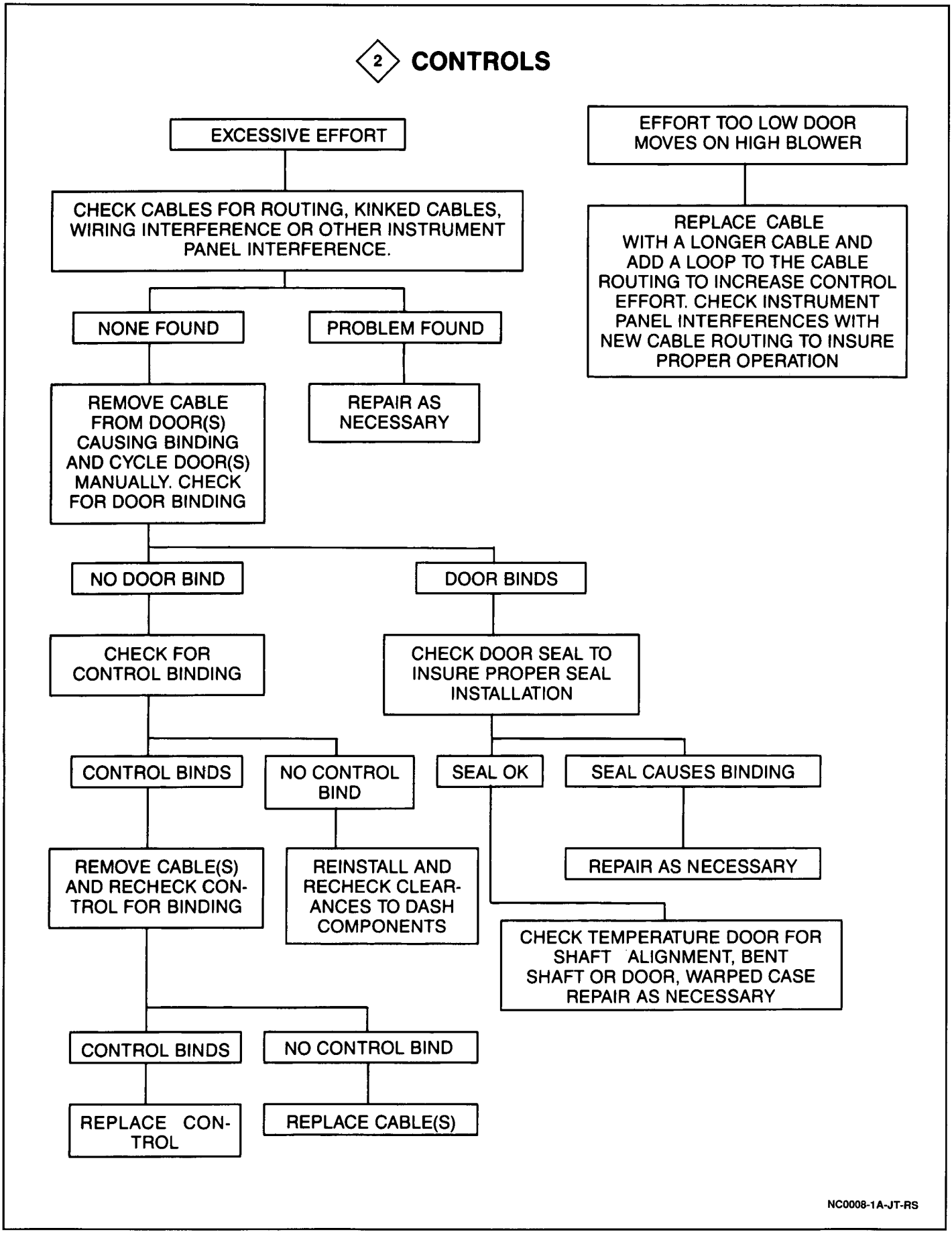

Figure 10 Heater Control Diagnosis

3 BLOWER NOISE

CHECK ALL ELECTRICAL CONNECTIONS AND GROUNDS FOR PROPER CONNECTIONS. IF IN DOUBT, USE A VOLTMETER TO CHECK FOR CONSTANT VOLTAGE AT THE BLOWER MOTOR.

SIT IN THE VEHICLE WITH THE DOORS AND WINDOWS CLOSED. WITH THE IGNITION ON AND THE ENGINE OFF, START WITH THE BLOWER ON HIGH, IN VENT MODE AND THE TEMPERATURE LEVER ON FULL COLD. CYCLE THROUGH BLOWER SPEEDS, MODES AND TEMPERATURE DOOR POSITIONS TO FIND WHERE THE NOISE OCCURS AND WHERE THE NOISE DOES NOT OCCUR. TRY TO DEFINE THE TYPE OF NOISE: AIR RUSH, WHINE, TICK/CLICK, SQUEAL/SCREECH, FLUTTER, RUMBLE OR SCRAPING NOISE. CHART BELOW SHOULD BE COMPLETELY FILLED IN AT COMPLETION.

A CONSTANT AIR RUSH NOISE IS TYPICAL OF ALL SYSTEMS ON HIGH BLOWER. SOME SYSTEMS AND MODES (USUALLY DEFROSTER) MAY BE WORSE THAN OTHERS. CHECK ANOTHER VEHICLE IF POSSIBLE (SAME MODEL) TO DETERMINE IF THE NOISE IS TYPICAL OF THE SYSTEM AS DESIGNED.

INDICATE THE TYPE OF NOISE AND WHERE IT OCCURS:

	VENT		HEATER		DEFROST	
	FULL COLD	FULL HOT	FULL COLD	FULL HOT	FULL COLD	FULL HOT
LOW BLOWER						
M2						
M3						
HIGH BLOWER						

A—WHINE, B—CLICK/TICK, C—SQUEAL/SCREECH, D—FLUTTER, E—RUMBLE, F—SCRAPING, G—AIR RUSH, H—OTHER, DESCRIBE _____

1. NOISE IS CONSTANT BUT LESSENS WITH BLOWER SPEED REDUCTION. TYPICAL NOISES ARE WHINE, TICK/CLICK FLUTTER OR SCRAPING NOISE.

2. NOISE IS AT START-UP ONLY OR IS INTERMITTENT. MAY OCCUR AT COLD AMBIENTS AND LOW BLOWER SPEEDS. TYPICAL NOISE IS AN OBJECTIONABLE SQUEAL/SCREECH.

3. NOISE IS CONSTANT AT HIGH BLOWER SPEEDS WITH SOME DOOR COMBINATIONS BUT CAN BE ELIMINATED AT LOWER BLOWER SPEEDS OR WITH OTHER DOOR COMBINATIONS. TYPICAL NOISES ARE FLUTTER OR RUMBLE

L

M

CONTINUED AT TOP OF NEXT PAGE

NC0009-1A-JT-RS

Figure 11 Blower Noise Diagnosis — 1 of 2

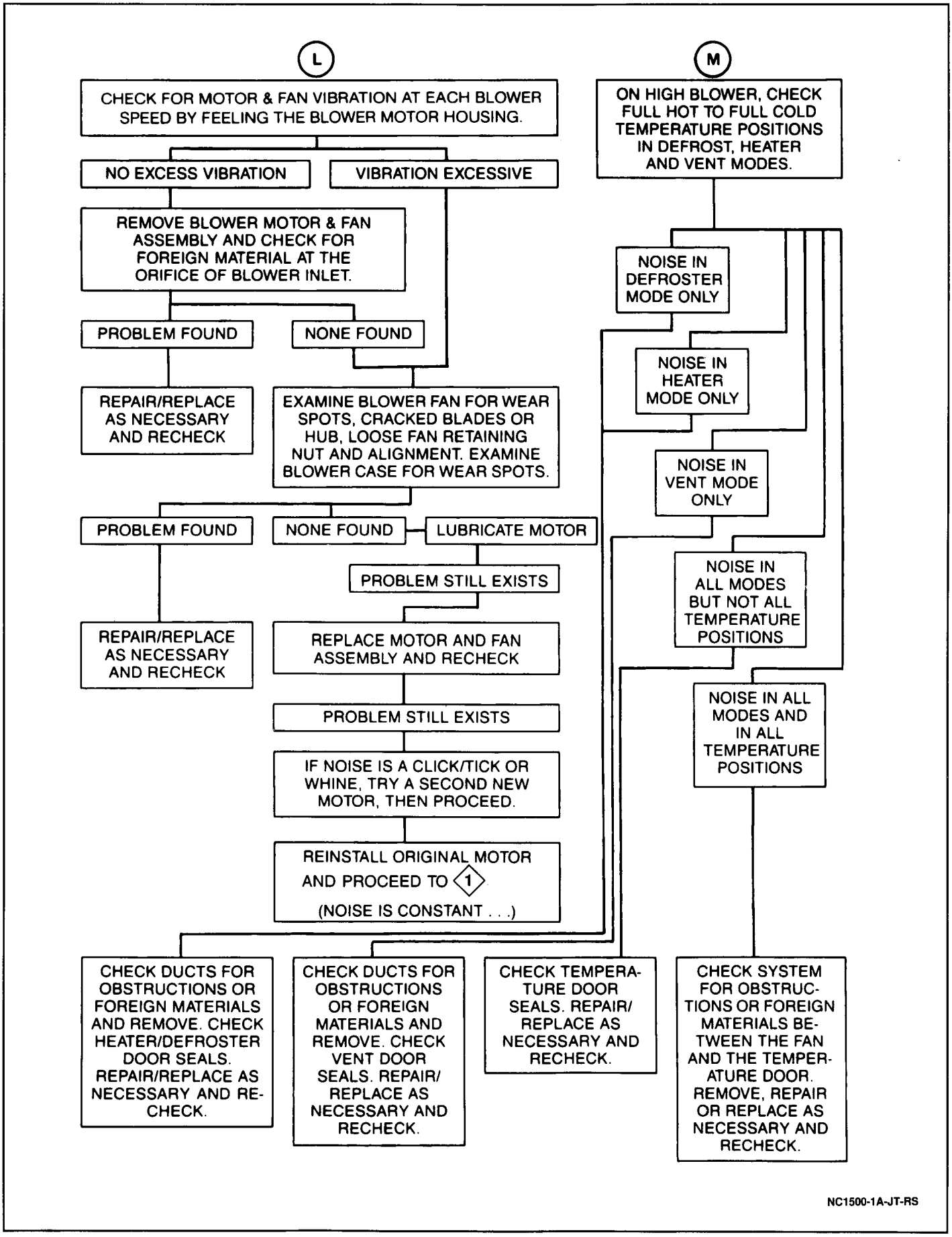

Figure 12 Blower Noise Diagnosis — 2 of 2

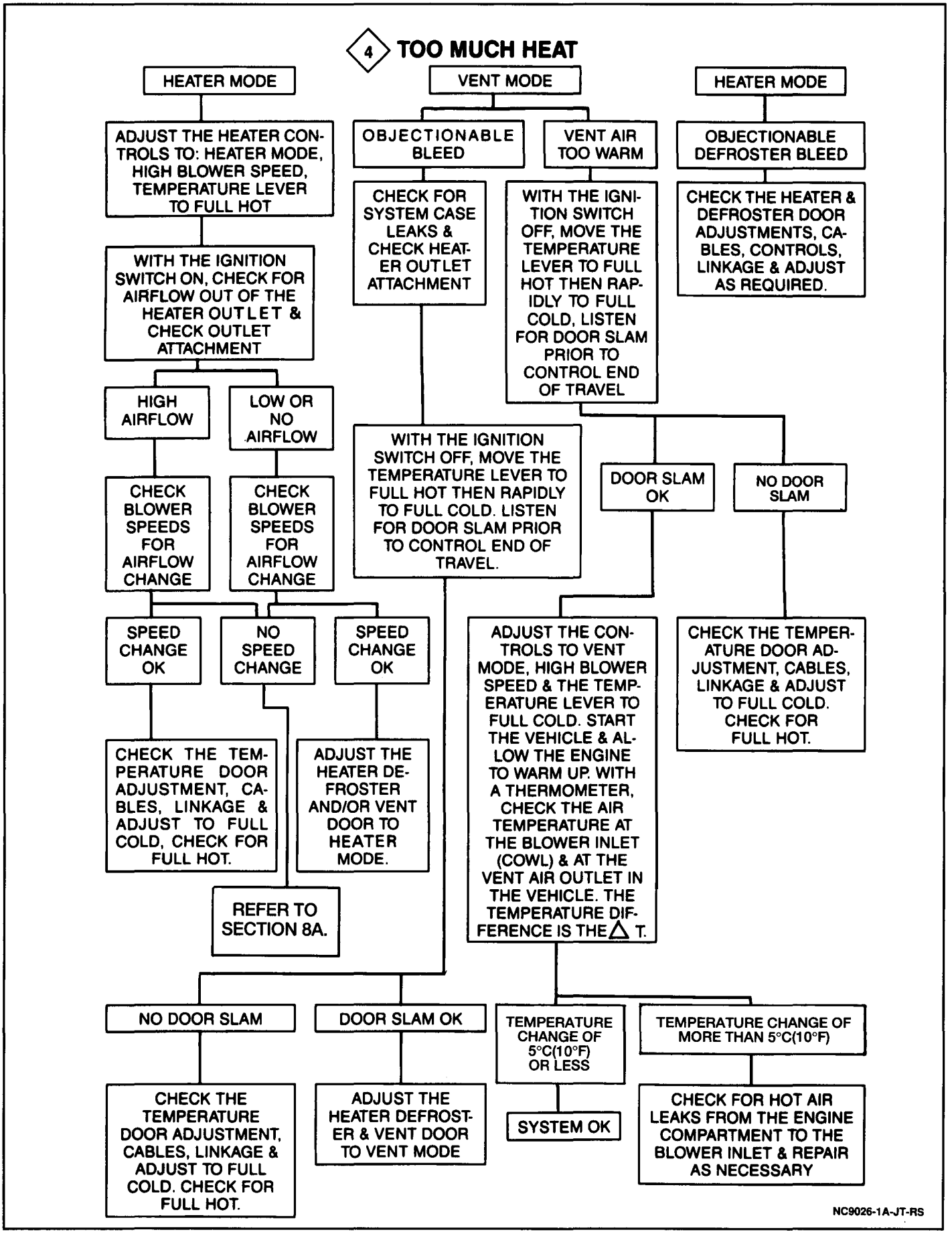

Figure 13 Excessive Heat Diagnosis

5 INSUFFICIENT HEATING OR DEFROSTING

CHECK THE COOLANT LEVEL, BELTS, BELT TENSION, HOSES FOR LEAKS OR KINKS, RADIATOR CAP

ADJUST THE HEATER CONTROLS TO: HEATER MODE, HIGH BLOWER SPEED, TEMPERATURE LEVER TO FULL HOT.

WITH THE IGNITION SWITCH ON, CHECK FOR AIRFLOW OUT OF THE HEATER OUTLET & CHECK OUTLET ATTACHMENT

- HIGH AIRFLOW
  - CHECK BLOWER SPEEDS FOR AIRFLOW CHANGE
    - SPEED CHANGE
    - NO SPEED CHANGE
      - REFER TO SECTION 8A.
- LOW OR NO AIRFLOW
  - RUN FUNCTIONAL CHECK PER SECTION 1 IF PROBLEM NOT RESOLVED THEN CHECK FOR AIRFLOW OUT DEFROSTER OR VENT OUTLETS
    - HIGH AIRFLOW OUT DEFROSTER OR VENT OUTLETS
      - ADJUST HEATER DEFROSTER AND/OR VENT DOOR TO HEATER MODE
    - LOW OR NO AIRFLOW OUT DEFROSTER OR VENT OUTLETS
      - SWITCH MODE LEVER TO DEFROSTER & CHECK AIRFLOW
        - DEFROSTER AIRFLOW OK
          - REMOVE HEATER OUTLET & CHECK FOR OBSTRUCTIONS
        - DEFROSTER LOW OR NONE
          - CHECK BLOWER SPEEDS FOR AIRFLOW CHANGE
            - NO SPEED CHANGE
              - REFER TO SECTION 8A.
            - SPEED CHANGE OK
              - CHECK FOR SYSTEM OBSTRUCTIONS AT BLOWER INLET & PLENUM
              - C

READJUST CONTROLS TO: HIGH BLOWER SPEED, HEATER MODE, FULL HOT TEMPERATURE LEVER. WITH THE ENGINE SUFFICIENTLY COOL, REMOVE THE RADIATOR CAP. CAUTION: COOLANT SYSTEM IS PRESSURIZED WHEN HOT. START THE VEHICLE AND IDLE UNTIL COOLANT FLOW IN THE RADIATOR IS VISIBLE. INSTALL THE RADIATOR CAP. WITH ENGINE WARM, DRIVE THE VEHICLE AT 48 KPH(30MPH). WITH A THERMOMETER, CHECK THE AMBIENT AIR TEMPERATURE & THE DISCHARGE AIR TEMPERATURE AT THE HEATER OUTLET PER CHART (TOTAL WARM UP TIME 20 MIN)

AMBIENT AIR TEMP. °C (F)	-18(0)	-4(25)	10(50)	24(75)
HEATER AIR TEMP. °C (F)	54(130)	59(139)	64(147)	68(155)

- HEATER TEMPERATURE OK PER CHART
  - A
- HEATER TEMPERATURE LOW PER CHART
  - B

CONTINUED AT TOP OF NEXT PAGE

NC9002-1A-JT-RS

Figure 14 Insufficient Heating or Defrosting — 1 of 2

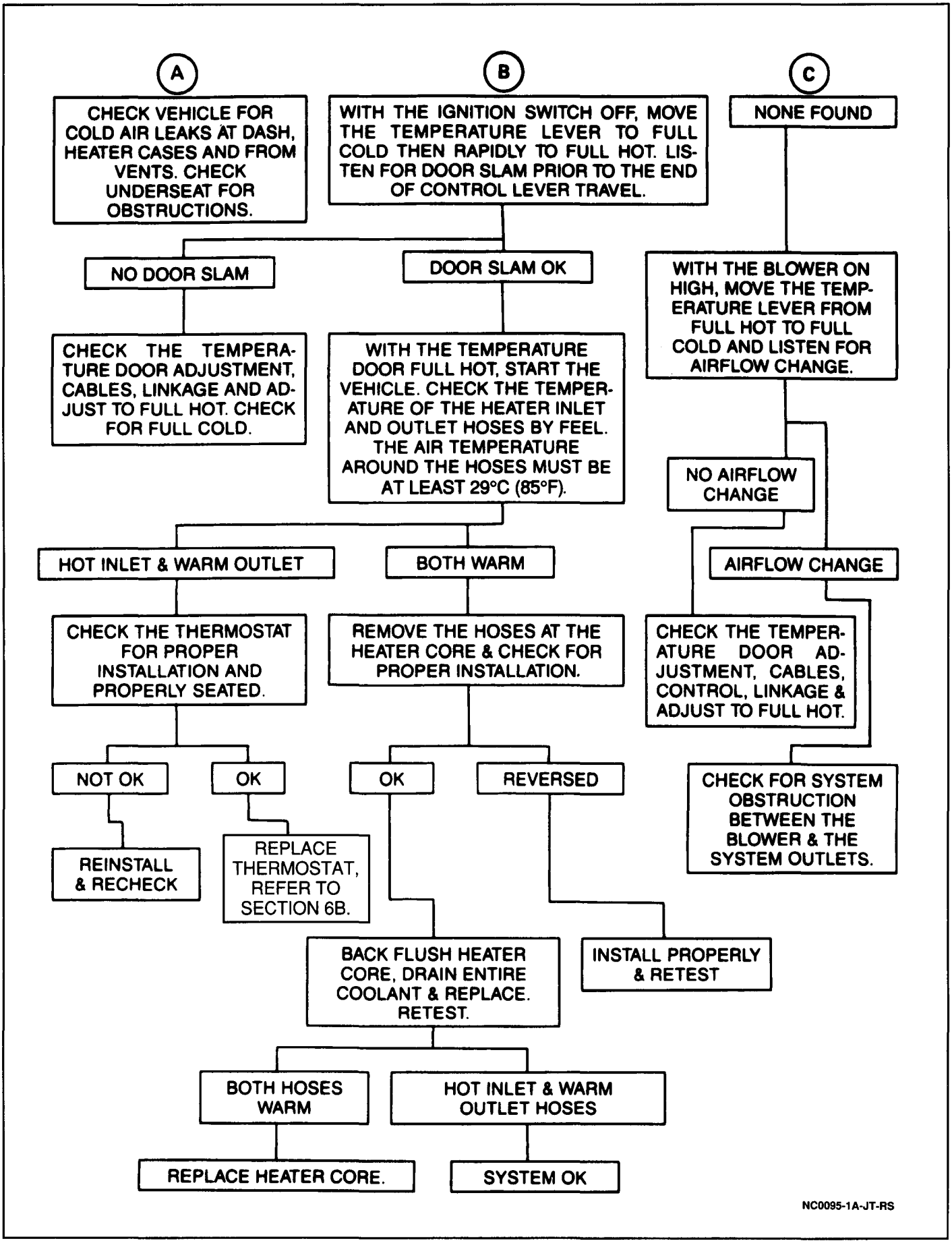

Figure 15 Insufficient Heating or Defrosting — 2 of 2

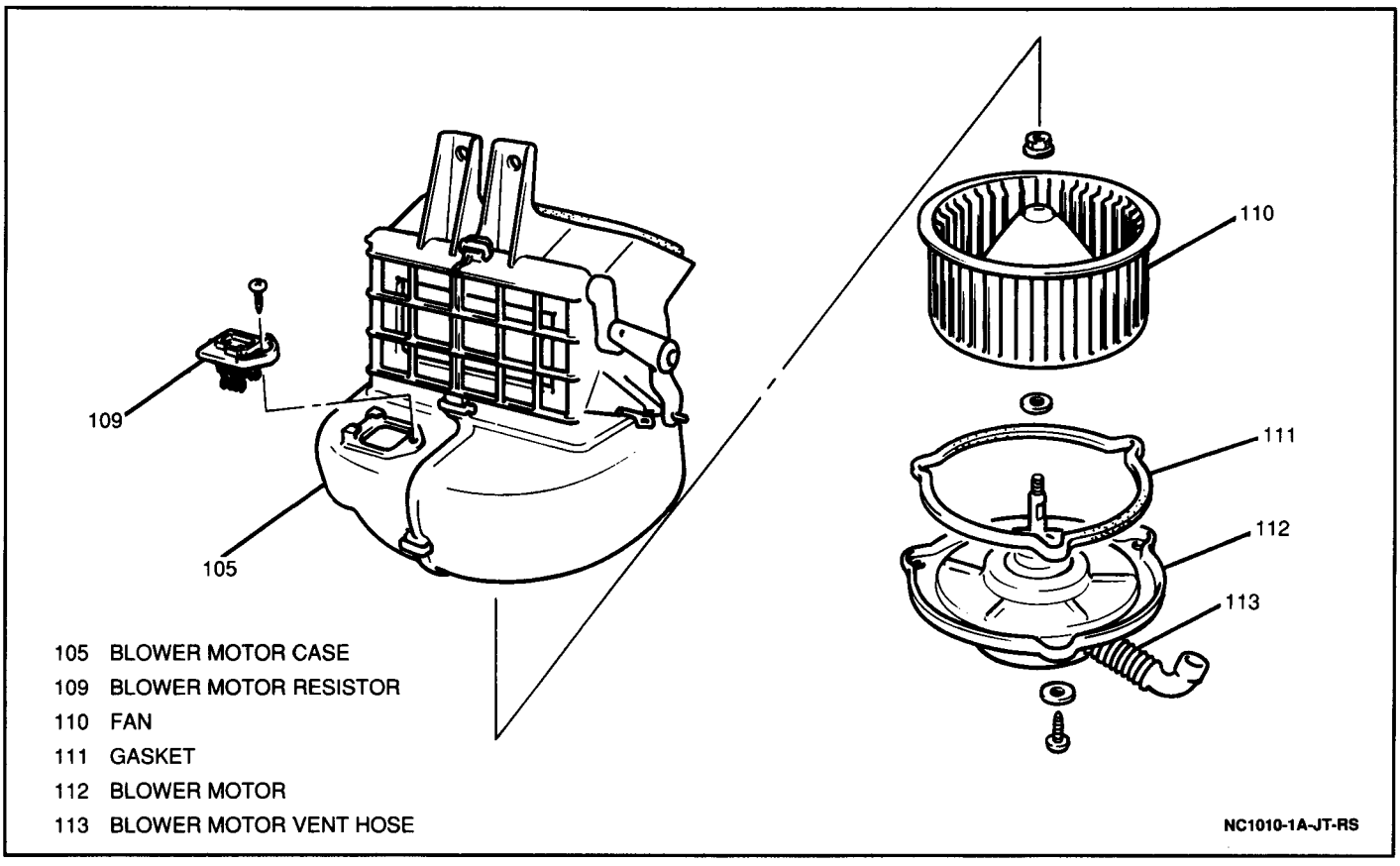

Figure 16 Blower Case and Motor Assembly

Blower Motor

Figure 17

Remove or Disconnect

1. Negative (-) battery cable.
2. Glove box door by removing two hinge pins.
3. Blower motor and resistor electrical connectors.
4. Fresh/recirc air control cable from blower motor case.
5. Wiring harness from guide brackets on blower motor case.
6. Blower motor case from vehicle by removing two upper retaining bolts.
7. Blower motor from case by removing three mounting screws (Figure 17).

Install or Connect

1. Blower motor to blower case; secure with three screws.
2. Blower motor case to vehicle; secure with two upper retaining bolts.

Tighten

- Blower motor case retaining bolts to 10 N·m (89 lb.in.).

3. Wiring harness to guide brackets on blower motor case.
4. Fresh/recirc air control cable to blower motor case.
5. Motor and resistor electrical connectors.

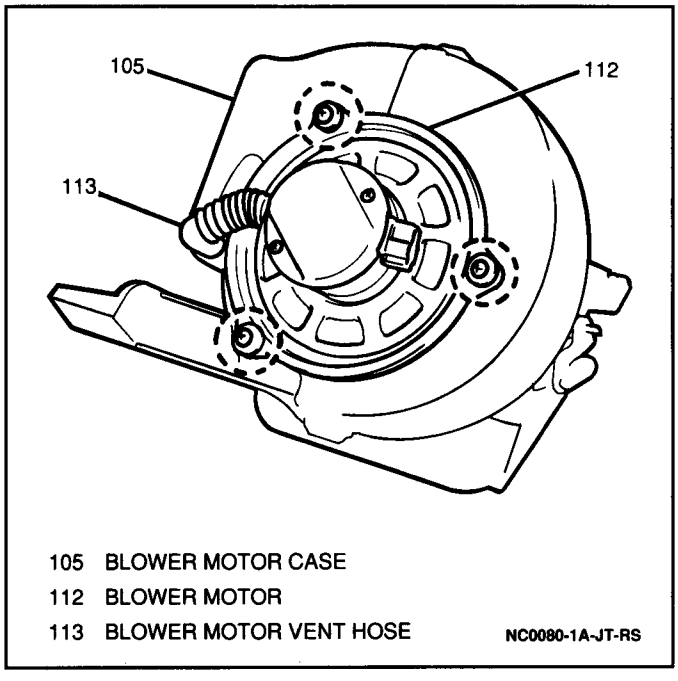

Figure 17 Blower Motor Mounting Screws

6. Glove box door; secure with two hinge pins.
7. Negative (-) battery cable.

Tighten

- Negative (-) battery cable-to-negative (-) battery terminal retainer to 15 N·m (11 lb.ft.).

BLOWER MOTOR RESISTOR

Figure 16

Remove or Disconnect

1. Negative (-) battery cable.
2. Glove box door by removing two hinge pins.
3. Resistor electrical connector.
4. Resistor fastening screw and resistor from blower motor case (Figure 16).

Install or Connect

1. Resistor to blower motor case.
2. Resistor electrical connector.
3. Glove box door; secure with two hinge pins.
4. Negative (-) battery cable.

Tighten

- Negative (-) battery cable-to-negative (-) battery terminal retainer to 15 N·m (11 lb.ft.).

BLOWER SPEED SELECTOR SWITCH

Figure 1

Remove or Disconnect

1. Negative (-) battery cable.
2. Knobs from heater control levers.
3. Heater control unit front plate and illumination lamp from instrument panel.
4. Center console bezel screws and bezel.
5. Glove box door by removing two hinge pins.
6. Blower switch electrical connector and blower speed selector switch from heater control unit.

Install or Connect

1. Blower speed selector switch to heater control unit, connecting switch electrical connector.

Important

- After installing blower speed selector switch, clamp the switch wiring harness to the lower center of the heater control assembly.

2. Glove box door; secure with two hinge pins.
3. Heater control unit illumination lamp and front plate.
4. Center console bezel; secure with screws.
5. Knobs to control levers.
6. Negative (-) battery cable.

Tighten

- Negative (-) battery cable-to-negative (-) battery terminal retainer to 15 N·m (11 lb.ft.).

CONTROL, TEMPERATURE AND FRESH/RECIRCULATION CABLES

Figures 18 through 21

Remove or Disconnect

1. Negative (-) battery cable.
2. Instrument panel. Refer to SECTION 8C.
3. Mode control cable from heater control unit and heater case (Figures 19 and 20).
4. Temperature control cable from heater control unit and heater case (Figure 21).
5. Fresh/recirc cable from heater control assembly and blower motor case (Figure 18).

Install or Connect

1. Mode control cable.
   A. Move mode control lever to vent.
   B. Attach mode control cable to control assembly with 0 to 1 mm (0 to 0.039-inch) of cable projecting from clamp (Figure 19).
   C. At heater case, push door (damper) linkage fully in the direction of the arrow to affix cable and rod into position (Figure 20).
2. Temperature control cable.
   A. Move temperature control lever to cool.
   B. At heater case, push door (damper) fully in the direction of the arrow to affix cable into position (Figure 21).
3. Fresh/recirc cable.
   A. Move fresh/recirc lever to fresh.
   B. Install cable at heater case (Figure 18).
4. Instrument panel. Refer to SECTION 8C.
5. Battery negative (-) cable.

Tighten

- Negative (-) battery cable-to-negative (-) battery terminal retainer to 15 N·m (11 lb.ft.).

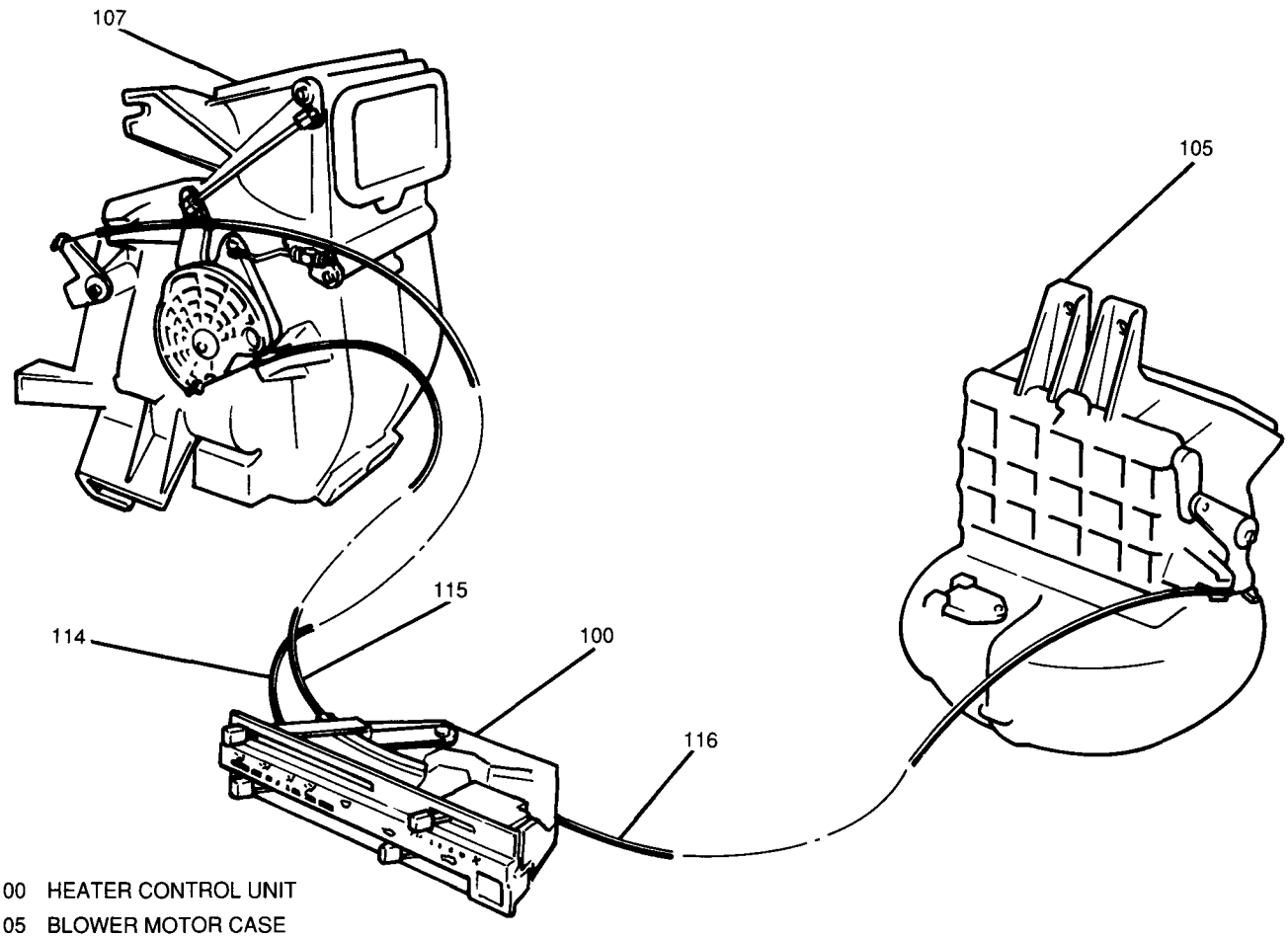

100 HEATER CONTROL UNIT
105 BLOWER MOTOR CASE
107 HEATER CASE
114 TEMPERATURE CONTROL CABLE
115 MODE CONTROL CABLE
116 FRESH/RECIRC CONTROL CABLE

NC1005-1A-JT-RS

Figure 18 Control Cables

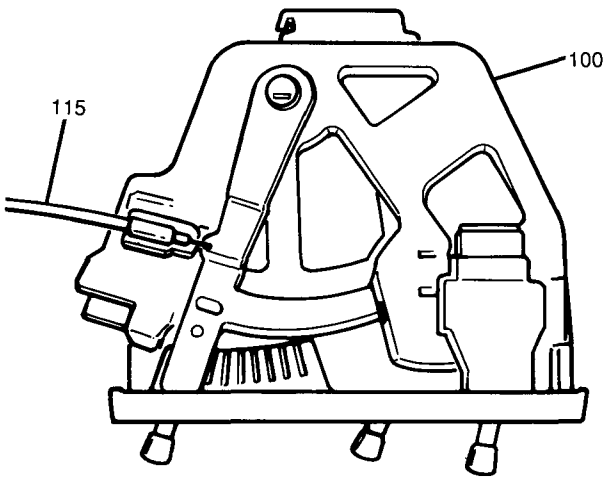

100 HEATER CONTROL UNIT
115 MODE CONTROL CABLE

NC0084-1A-JT-RS

Figure 19 Mode Control Cable at Heater Control Unit

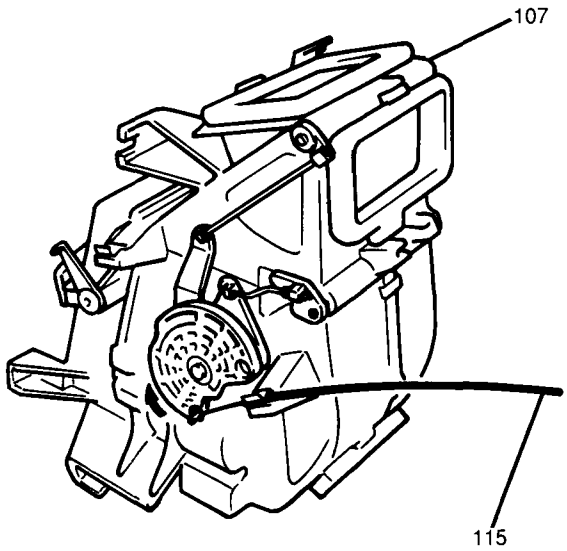

107 HEATER CASE
115 MODE CONTROL CABLE

NC0085-1A-JT-RS

Figure 20 Mode Control Cable at Heater Case

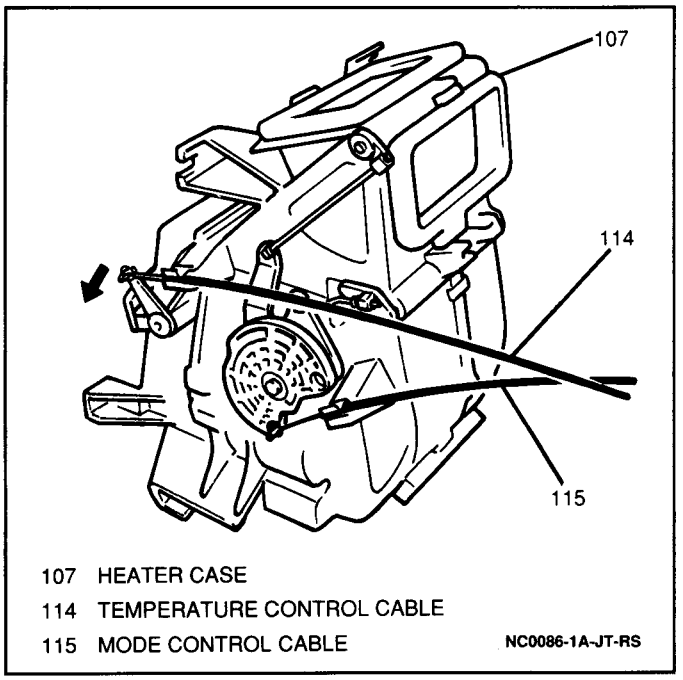

Figure 21 Temperature Control Cable at Heater Case

HEATER CASE

Figures 22 and 23

Remove or Disconnect

1. Negative (-) battery cable.
- Drain cooling system. Refer to SECTION 6B.
2. Instrument panel. Refer to SECTION 8C.
3. Instrument panel center support.
4. All electrical connectors from heater case.
5. All cables from heater case. Refer to "Control, Temperature and Fresh/Recirulation" earlier in this section.
6. Two heater hoses from heater case.
7. Defroster duct and speedometer cable retaining bracket from heater case.
8. Grommets and floor duct from case.
9. Two heater case mounting nuts from the engine compartment-side of the bulkhead, and two heater case mounting bolts (Figure 23).
10. Heater case from vehicle.

Install or Connect

1. Heater case to vehicle.
2. Mounting bolts and nuts.

Tighten

- Heater case bolts and nuts to 10 N·m (89 lb.in.).

3. Grommets and floor duct to heater case.
4. Speedometer cable retaining bracket and defroster duct to unit.
5. Heater hoses to heater core; take care not to spill coolant on vehicle.
6. All cables to heating case. Refer to "Control, Temperature and Fresh/Recirculation" earlier in this section.
7. All electrical connectors to heater case.
8. Instrument panel center support.
9. Instrument panel. Refer to SECTION 8C.
- Refill cooling system. Refer to SECTION 6B.
10. Negative (-) battery cable.

Tighten

- Negative (-) battery cable-to-negative (-) battery terminal retainer to 15 N·m (11 lb.ft.).

Heater Core

Figure 24

Remove or Disconnect

1. Heater case. Refer to "Heater Case" earlier in this section.
2. Heater core from heater case (Figure 24).

Install or Connect

1. Heater core to case (Figure 24).
2. Heater case to vehicle. Refer to "Heater Core earlier in this section.

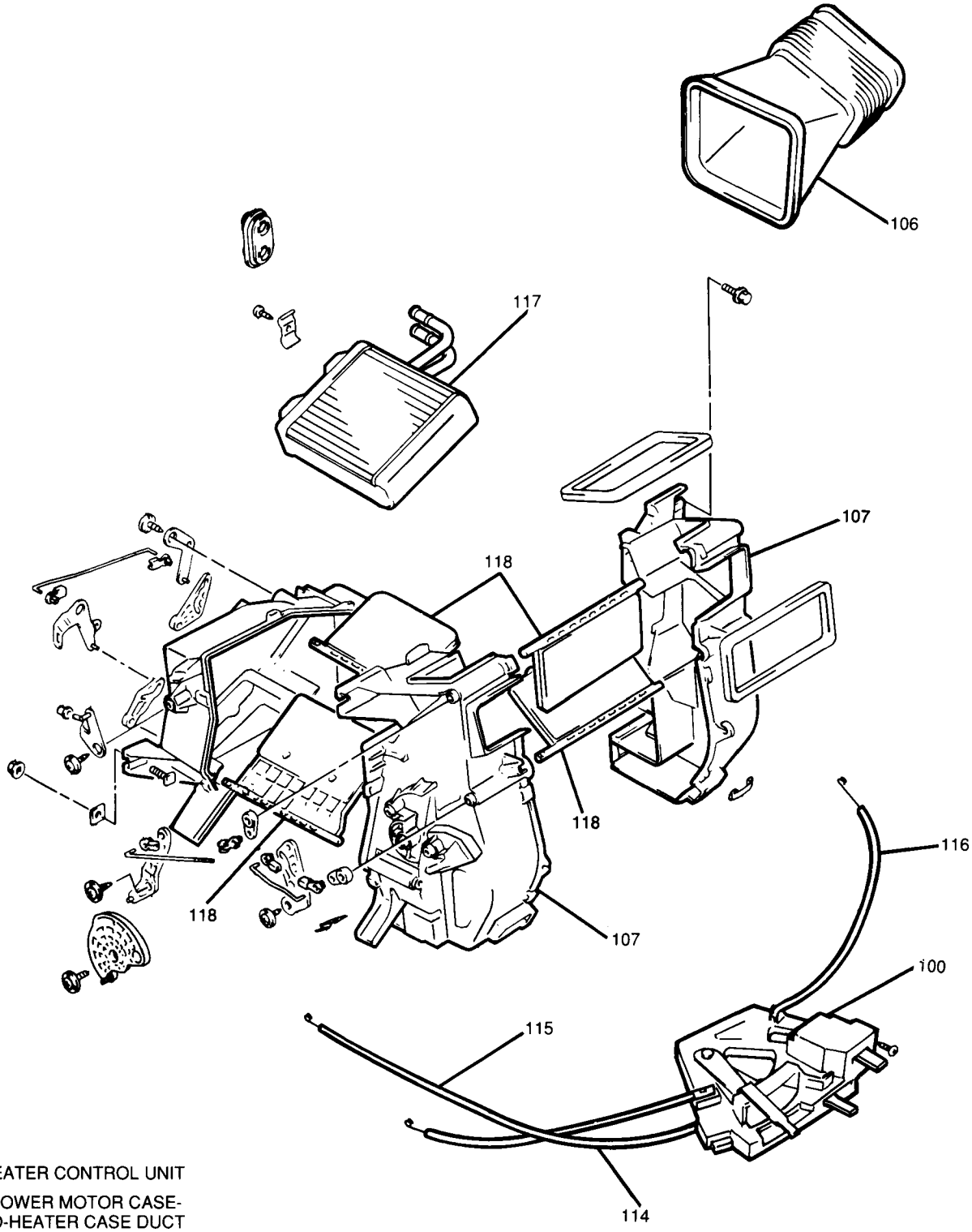

100 HEATER CONTROL UNIT
106 BLOWER MOTOR CASE-TO-HEATER CASE DUCT
107 HEATER CASE
114 TEMPERATURE CONTROL CABLE
115 MODE CONTROL CABLE
116 FRESH/RECIRC CONTROL CABLE
117 HEATER CORE
118 DAMPERS

NC1011-1A-JT-RS

Figure 22 Heater Case Assembly

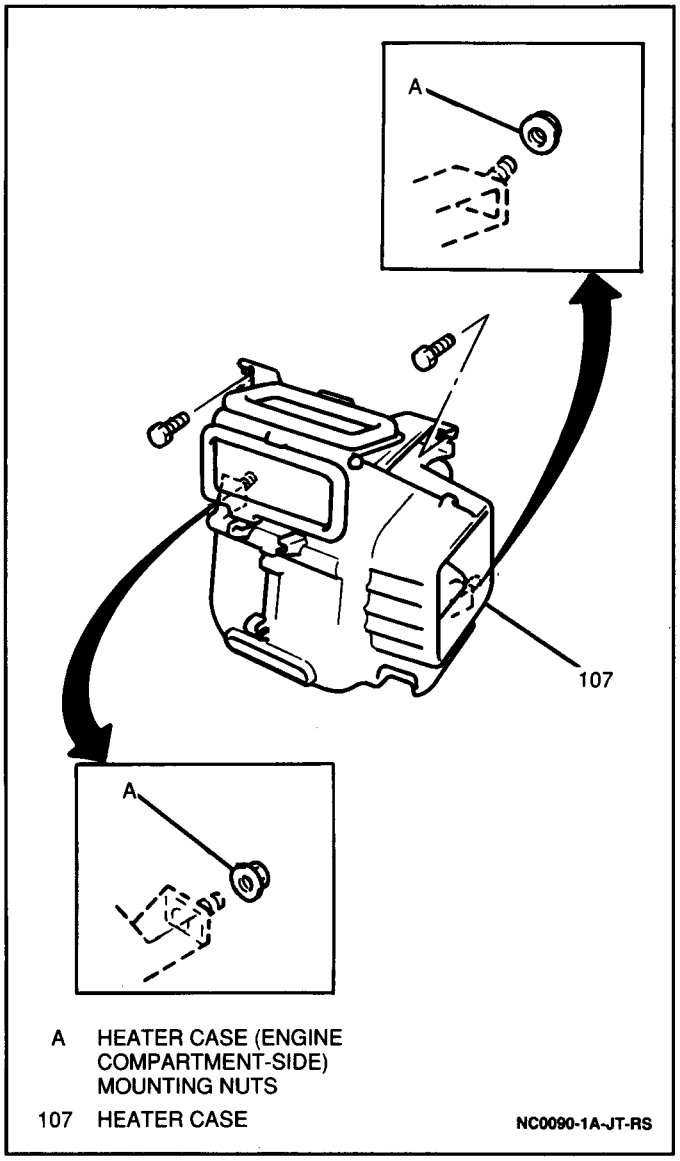

Figure 23 Heater Case Fasteners

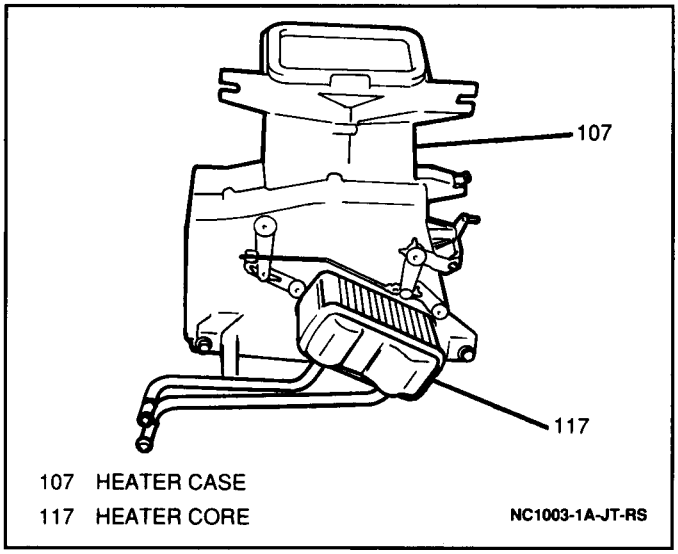

Figure 24 Heater Core

HEATER HOSES

Remove or Disconnect

- Drain cooling system. Refer to SECTION 6B.
1. Heater core inlet hose from bulkhead fitting and engine coolant pipe by loosening hose clamps.
2. Heater core outlet hose from bulkhead fitting and intake manifold by loosening hose clamps.

Install or Connect

1. Heater core outlet hose to bulkhead fitting and intake manifold; secure with hose clamps.
2. Heater core inlet hose to bulkhead fitting and engine coolant pipe; secure with hose clamps.
- Refill cooling system. Refer to SECTION 6B.

REAR FLOOR HEAT DUCT

Figure 25

Remove or Disconnect

1. Front seats. Refer to SECTION 10-10.
2. Shift selector lever trim cover (four screws).
3. Floor carpet until rear duct is completely exposed (Figure 25).
4. Retaining screws and rear floor heat duct from vehicle.

Install or Connect

1. Rear floor heat duct to vehicle; secure with retaining screws.
- Reposition floor carpet.
2. Shift selector lever trim cover (four screws).
3. Front seats. Refer to SECTION 10-10.

INSTRUMENT PANEL OUTLETS

Center Instrument Panel Outlet

Figure 26

Remove or Disconnect

- Center instrument panel outlet using a flat-bladed tool. Pry out from center of outlet (Figure 26).

Install or Connect

- Center instrument panel outlet by snapping into place in instrument panel cavity.

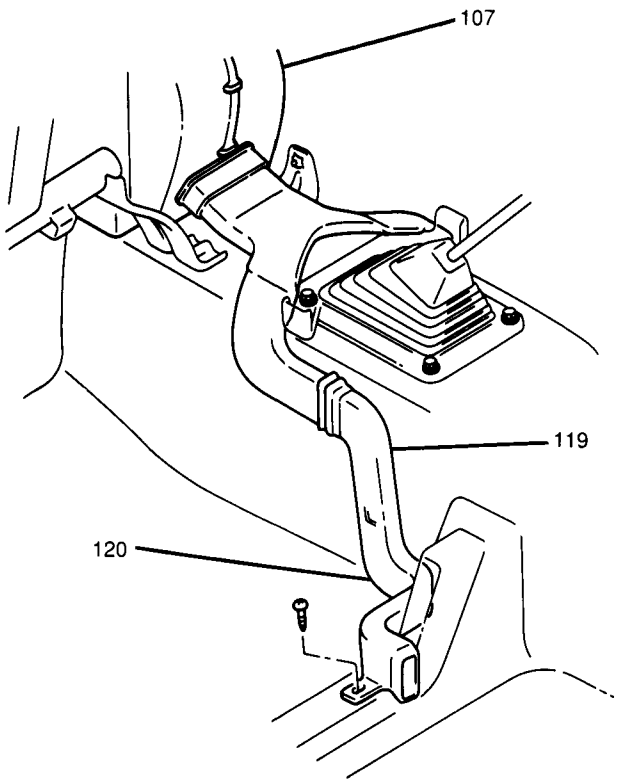

107 HEATER CASE
119 REAR FLOOR HEAT DUCT
120 REAR DUCT—LEFT-SIDE EXTENSION
NC0101-1A-JT-RS

Figure 25 Rear Floor Heat Duct

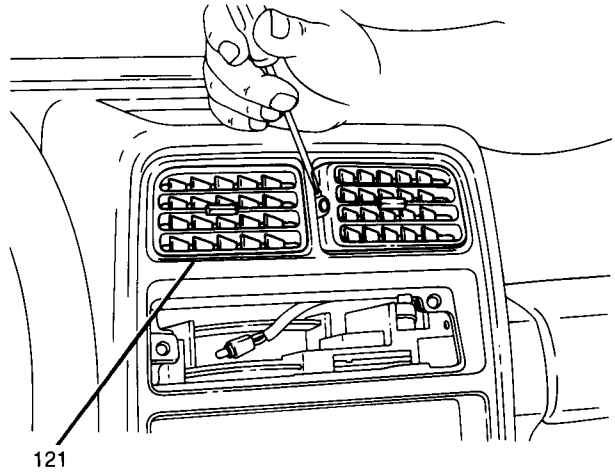

121 CENTER INSTRUMENT PANEL OUTLET
NC0102-1A-JT-RS

Figure 26 Removing Center Instrument Panel Outlet

Side Instrument Panel Outlets

Figures 27 and 28

Both the side instrument panel outlets are secured with screws which can only be accessed from behind the instrument panel. To remove the left-side I/P outlet, the instrument panel must be removed. Refer to SECTION 8C.

The right-side I/P outlet can be accessed through the glove box with the instrument panel installed.

Remove or Disconnect

1. Glove box by removing one retaining pin from the lower right corner of the box.
2. Two ventilation ducts from the right-side instrument panel outlet.
3. One cross-recess retaining screw from the back of the right-side outlet. Access through glove box opening (Figure 27.)
4. Right-side instrument panel outlet from I/P (Figure 28).

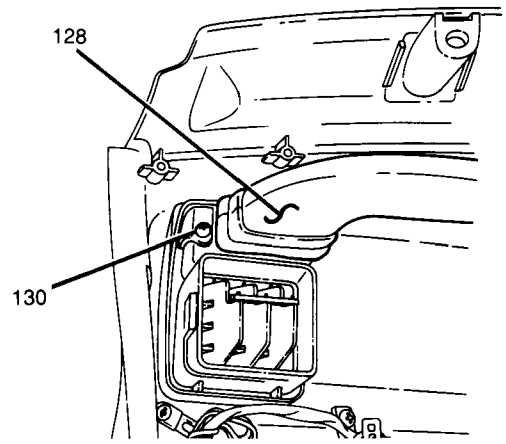

128 RIGHT-SIDE WINDOW DEFROSTER DUCT
130 RIGHT-SIDE INSTRUMENT PANEL OUTLET RETAINING SCREW
NC0103-1A-JT-RS

Figure 27 Right-Side Instrument Panel Outlet Retaining Screw

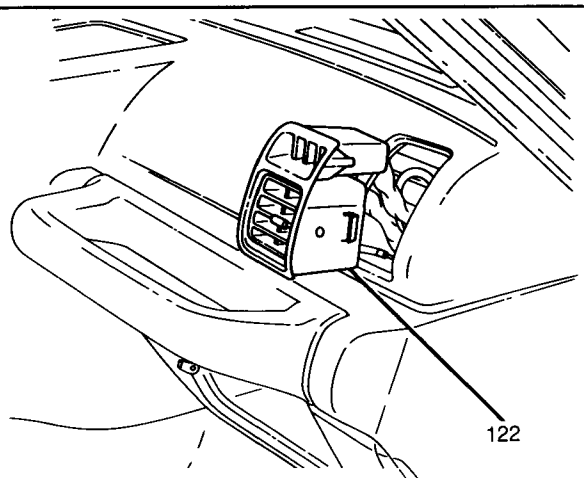

122 RIGHT-SIDE INSTRUMENT PANEL OUTLET
NC0104-1A-JT-RS

Figure 28 Removing Right-Side Instrument Panel Outlet

Install or Connect

1. Right-side instrument panel outlet to I/P; secure from behind with one retaining screw (Figure 27).
2. Two ventilation ducts to the right-side instrument panel outlet.
3. Glove box to instrument panel; secure with one retaining pin.

SPECIFICATIONS

FASTENER TORQUES

Blower Motor Case Retaining Bolts	10 N·m (89 lb.in.)
Heater Case Bolts and Nuts	10 N·m (89 lb.in.)
Negative Battery Cable-to-Battery Retainer	15 N·m (11 lb.ft.)

SERVICE PARTS INFORMATION

Component Name Used in Section 1A	Reference Name in Service Parts Catalog	Group Number
Blower Motor	Motor Assm, Heater Blower	8.855
Blower Fan	Fan, Heater Blower	8.854
Heater Case	Case, Heater Blower	8.857
Blower Motor Resistor	Resistor, Blower Motor	8.855
Heater Case	Case, Heater	8.854
Heater Core	Core, Heater Radiator	8.854
Heater Control Unit	Lever Assm, Heater Control	8.849
Temperature Control Cable	Cable, Heater Control, Hot/Cold	9.787
Fresh/Recirc Control Cable	Cable, Heater Fresh/Recirculation..	9.787
Mode Control Cable	Cable, Heater Mode Control	9.787
Heater Hoses	Hose, Engine Heater Core	8.846
Rear Floor Heat Duct	Duct, Ventilator Rr	9.262

SECTION 1B

AIR CONDITIONING

NOTICE: When fasteners are removed, always reinstall them at the same location from which they were removed. If a fastener needs to be replaced, use the correct part number fastener for that application. If the correct part number is not available, a fastener of equal size and strength (or stronger) may be used. Fasteners that are not reused, and those requiring thread-locking compound, will be called out. The correct torque values must be used when installing fasteners that require them. If the above procedures are not followed, parts or system damage could result.

CONTENTS

General Information 1B-1
General Description 1B-2
Air Distribution System 1B-2
System Components 1B-4
Compressor 1B-4
A/C Compressor Clutch 1B-4
Condenser 1B-4
Condenser Fan 1B-4
Expansion Valve 1B-5
Evaporator 1B-5
Receiver/Dryer 1B-6
Refrigerant-12 ..... 1B-6
A/C Switches, Relays and Sensors 1B-7
Dual Pressure Switch 1B-7
A/C Engine Coolant Temperature (ECT) Switch 1B-7
Evaporator Thermistor 1B-7
A/C Amplifier 1B-7
A/C Condenser Fan Relay and A/C Compressor Clutch Relay 1B-7
Air Conditioner Controls 1B-8
A/C Switch 1B-8
Mode Control Lever 1B-8
Blower Speed Control Lever 1B-8
Fresh-Recirc Control Lever 1B-8
Temperature Control Lever 1B-9
Refrigeration System 1B-10
Refrigeration Cycle 1B-10
Diagnosis 1B-10
General Information 1B-10
Insufficient Cooling Check 1B-11
Refrigeration System Checks 1B-16
Leak Testing the Refrigeration System 1B-16
Electrical System Diagnosis 1B-18
Blower Noise 1B-18
On-Vehicle Service 1B-18
Refrigeration System Services 1B-18
Replacing O-Rings 1B-18
Handling Refrigerant-12 ..... 1B-19
Handling Refrigerant Pipes, Hoses and Fittings 1B-19
Maintaining Refrigerant Chemical Stability 1B-19
Air Conditioning Refrigerant Recovery, Recycling and (ACR^3) Station Set Up 1B-20
Adding Oil, Evacuating and Charging the Refrigeration System 1B-25
Compressor Drive Belt Inspection and Adjustment 1B-28
Replacement Procedures 1B-31
A/C Switch 1B-31
A/C Condenser Fan Relay and A/C Compressor Clutch Relay 1B-31
Condenser 1B-31
Receiver/Dryer 1B-32
Compressor 1B-33
Compressor Mounting Brackets 1B-34
A/C Compressor Clutch 1B-34
Evaporator 1B-34
Expansion Valve 1B-37
Evaporator Thermistor 1B-38
A/C Amplifier 1B-39
A/C Engine Coolant Temperature (ECT) Switch 1B-40
Dual Pressure Switch 1B-40
Air Ducts and Deflector Outlets 1B-40
Heater Hoses 1B-41
Refrigerant Pipes and Hoses 1B-41
Specifications 1B-43
Fastener Torques 1B-43
Refrigeration System Capacities 1B-43
Service Parts Information 1B-43
Special Tools 1B-44

GENERAL INFORMATION

When removing, installing or working near any electrical components, disconnect the negative (-) battery cable to prevent bodily injury and/or damage to the vehicle.

Before any work is performed on the air conditioning system, review precautions on handling Refrigerant-12 (R-12) along with the discharging, recovery and recycling procedures located in this section.

Mechanical diagnosis of the compressor is located later in this section. For compressor unit repair and overhaul procedures, refer to SECTION 1D. For air conditioning system electrical diagnosis, refer to SECTION 8A.

Sealing caps should be removed from subassemblies just before making final connections. Always use new O-rings when assembling joints or installing switches. Use a second wrench to hold part of the connection so that an accurate torque value can be obtained when tightening fittings.

GENERAL DESCRIPTION

This vehicle is available with an optional air conditioning system. This section covers the description, on-vehicle service and charging procedures of the air conditioning system.

AIR DISTRIBUTION SYSTEM

Passenger compartment comfort is maintained by the mix of cooled ambient air and heated air as controlled by the temperature lever on the instrument panel.

The manually controlled air conditioning system in this vehicle delivers air that has been heated or cooled and dehumidified for occupant comfort. It also provides ram air, power ventilation and windshield defrosting.

During most operating conditions, fresh outside air is drawn into the ventilation ducts by the blower. Additional outside air (ram air), also may be forced into the ventilation ducts by the forward movement of the vehicle. Within the ventilation ducts, the air is pushed by the blower through the evaporator case. For air conditioning or defroster operating modes, the evaporator is chilled to almost freezing by the engine-driven air conditioning refrigeration system. As a result, the evaporator cools all of the air going through the ventilation ducts. The cooling effect causes most of the moisture in the air to condense on the evaporator fins and drain away – dehumidifying the air.

From the evaporator case, some or all of the air may pass through the heater core which is warmed by a flow of hot engine coolant. Any of the air which is not to be heated will bypass the heater and be mixed with the heated air before being guided to the proper air ducts for the selected operating mode.

When the air conditioning mode is selected, the flow of engine coolant through the heater core is shut off to prevent any heating of the air flow before it is discharged. Most of the air entering the blower is outside air, or controls can be set so that air is taken from inside the passenger compartment where the air is likely to be much cooler than outside air in very hot weather.

For heater-only or ventilation modes, the refrigeration system is shut off so cooling is not provided. The amount of heating is governed by the proportions of the air directed through or around the heater core in the same manner as with air conditioning. The climate control assembly in the instrument panel gives the operator a means of selecting the desired operating mode, air temperature and blower speed when the engine is running.

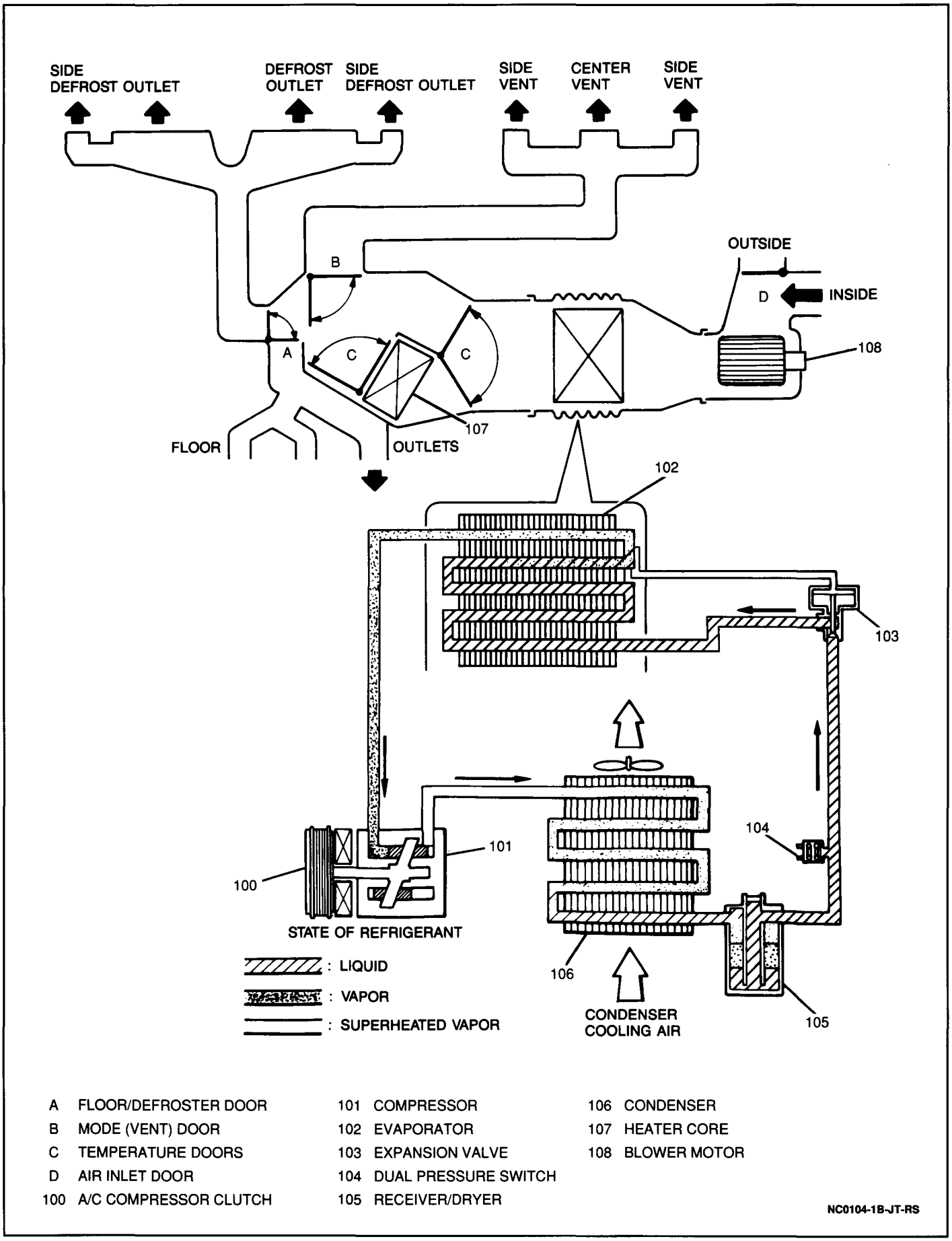

A	FLOOR/DEFROSTER DOOR	101	COMPRESSOR	106	CONDENSER
B	MODE (VENT) DOOR	102	EVAPORATOR	107	HEATER CORE
C	TEMPERATURE DOORS	103	EXPANSION VALVE	108	BLOWER MOTOR
D	AIR INLET DOOR	104	DUAL PRESSURE SWITCH		
100	A/C COMPRESSOR CLUTCH	105	RECEIVER/DRYER		

Figure 1 Air Conditioning System

SYSTEM COMPONENTS

Figures 1 through 3

Compressor

The compressor is powered by a drive belt from the engine crankshaft through the A/C compressor clutch pulley. The compressor pulley rotates freely, without turning the compressor shaft, until an electromagnetic clutch coil is energized. When voltage is applied to energize the A/C compressor clutch coil, a clutch plate and hub assembly is drawn rearward toward the pulley. The magnetic field locks the clutch plate and pulley together as one unit to drive the compressor shaft. As the compressor shaft turns, the compressor performs two main functions.

It compresses the low-pressure refrigerant vapor from the evaporator into a high-pressure, high-temperature vapor. The compressor also pumps refrigerant (and refrigerant oil) throughout the air conditioning system. For compressor overhaul procedures, refer to SECTION 1D.

A/C Compressor Clutch

The compressor is belt-driven from the engine crankshaft via the A/C compressor clutch pulley. When the air conditioner is not operating the pulley turns freely. When the A/C is turned on the A/C compressor clutch engages the pulley, and the compressor begins pumping. The clutch is controlled by the A/C electrical circuit.

Condenser

The condenser assembly is mounted in front of the radiator and is comprised of small coils and cooling fins. When the high-pressure, high-temperature vapor, just discharged from the compressor, enters the condenser, heat is transferred from the refrigerant to passing ambient air through the condenser's cooling fins. By the time the refrigerant has traveled the length of the condenser's coils, most of the vapor has cooled and condensed into a liquid. Refrigerant passing through the condenser is transformed from a high-pressure, high-temperature vapor into a high-pressure, medium-temperature liquid.

Condenser Fan

The condenser fan is crucial to the proper operation of the A/C system. The fan ensures a sufficient amount of air flow across the condenser throughout the vehicle's operating spectrum. The fan should be checked during A/C diagnosis procedures. Special attention should be given to the fan whenever excessive high-side pressure is encountered. For condenser fan diagnosis, refer to SECTION 8A.

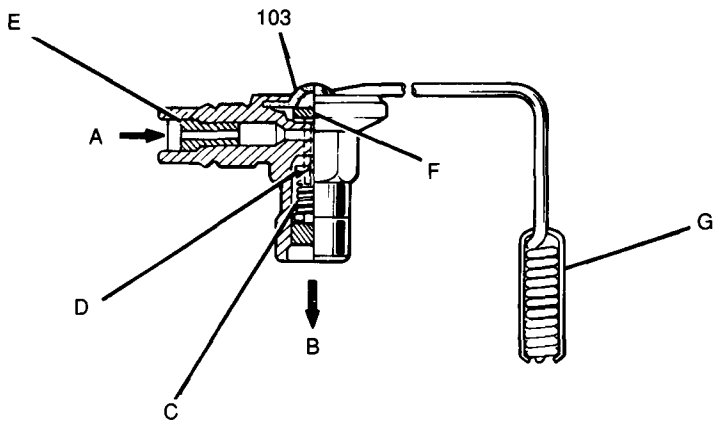

A INLET
B OUTLET
C PRESSURE SPRING
D BALL
E BAFFLE
F DIAPHRAGM
G REMOTE BULB
103 EXPANSION VALVE

Figure 2 Expansion Valve – Sectional View

Expansion Valve

Figure 2

The expansion valve regulates the flow of liquid refrigerant into the core of the evaporator. As the condensed liquid refrigerant is released through the expansion valve, the refrigerant's pressure decreases considerably. As the pressure drops, the refrigerant's temperature also drops. Refrigerant passing through the expansion valve is transformed from a high-pressure, medium-temperature liquid into a low-pressure, low-temperature liquid.

Evaporator

The evaporator is housed in the evaporator case, located behind the right-hand side of the instrument panel. During air conditioning operation, ambient air is directed through the fins of the evaporator and into the vehicle's passenger compartment. Heat from the ambient air is transferred to the low-pressure, low-temperature liquid refrigerant passing through the evaporator.

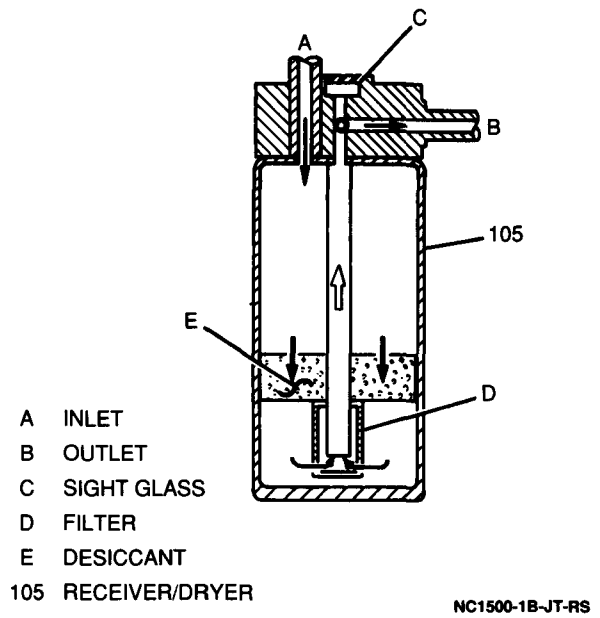

Figure 3 Receiver/Dryer – Sectional View

Receiver/Dryer

Figure 3

The receiver/drier is mounted to the right of the condenser and is connected to the condenser outlet pipe between the condenser and the evaporator. In order for the air conditioning system to operate properly, the receiver/dryer must perform three functions: first, the receiver/dryer serves as a temporary storage container for condensed liquid refrigerant. Second, the receiver/dryer acts as a filter which removes moisture and contaminants from the system. Third, the receiver/dryer incorporates a sight glass, through which the state of the system's refrigerant can be determined.

Refrigerant-12

Figure 4

Like the coolant in an engine cooling system, the refrigerant is the substance in the air conditioning system that absorbs, carries and then releases heat. Although various substances are used as refrigerants in other types of refrigeration systems, automotive air conditioning systems use a substance referred to as Refrigerant-12, or R-12. This compound is nonexplosive, nonflammable, noncorrosive except when in contact with water, and nonpoisonous except when in contact with an open flame or hot metal. R-12 is also soluble in oil.

In automotive air conditioning systems, R-12 is kept under a pressure of about 195 kPa (28 psi). At this pressure, R-12 boils (changes from a liquid to a vapor) at approximately -1°C (30°F), which is ideal for air conditioning system operation. At normal sea level atmospheric pressure, R-12 boils at about -30°C (-22°F), which is cold enough to cause severe frostbite to unprotected skin surfaces. R-12 often carries a charge of special lubricating oil, normally 525 viscosity refrigerant oil, through the A/C system. Since the refrigerant has an affinity for oil, the two compounds mix easily and completely. Even the refrigerant vapor carries small particles of oil. As the liquid or vapor moves through the system, it keeps the moving parts of the compressor lubricated.

REFRIGERANT-12 PRESSURE-TEMPERATURE RELATIONSHIP

The table at the right indicates the pressure of Refrigerant-12 at various temperatures. For instance, a drum of refrigerant at a temperature of 80°F (26°C) will have a pressure of 84.1 psi (579.9 kPa). If it is heated to 125°F (51.6°C), the pressure will increase to 167.5 psi (1154.9 kPa). It also can be used conversely to determine the temperature at which Refrigerant-12 boils under various pressures. For example, at a pressure of 30.1 psi (207.5 kPa), Refrigerant-12 boils at 32°F (0°C).

(°F)	(°C)	(PSIG)	(kPa)	(°F)	(°C)	(PSIG)	(kPa)
-21.7	-29.8C	0 (ATMOSPHERIC PRESSURE)	0 (kPa)	55	12.7C	52.0	358.5
				60	15.5C	57.7	397.8
-20	-28.8C	2.4	16.5	65	18.3C	63.7	439.2
-10	-23.3C	4.5	31.0	70	21.1C	70.1	482.7
- 5	-20.5C	6.8	46.9	75	23.8C	76.9	530.2
0	-17.7C	9.2	63.4	80	26.6C	84.1	579.9
5	-15.0C	11.8	81.4	85	29.4C	91.7	632.3
10	-12.2C	14.7	101.4	90	32.2C	99.6	686.7
15	- 9.4C	17.7	122.0	95	35.0C	108.1	745.3
20	- 6.6C	21.1	145.5	100	37.7C	116.9	806.0
25	- 3.8C	24.6	169.6	105	40.5C	126.2	870.2
30	- 1.1C	28.5	196.5	110	43.3C	136.0	937.7
32	0C	30.1	207.5	115	46.1C	146.5	1010.1
35	1.46C	32.6	224.8	120	48.8C	157.1	1083.2
40	4.4C	37.0	255.1	125	51.6C	167.5	1154.9
45	7.2C	41.7	287.5	130	54.4C	179.0	1234.2
50	10.0C	46.7	322.0	140	60.0C	204.5	1410.0

NC1866-1B-JT-RS

Figure 4 Temperature/Pressure Relationship – Refrigerant-12

A/C SWITCHES, RELAYS AND SENSORS

Dual Pressure Switch

Figure 5

The dual pressure switch, located atop the receiver/dryer, acts to cycle the compressor on and off under conditions of abnormally low or abnormally high refrigerant pressure. If pressure drops below 207 kPa (30 psi) or rises above 2641 kPa (384 psi), the dual pressure switch opens and signals the A/C amplifier to shut down the compressor. Reasons for abnormally low refrigerant pressure are an insufficient refrigerant supply or very low refrigerant temperatures. Reasons for abnormally high refrigerant pressure include extremely high refrigerant temperatures or an overcharging of the system during service.

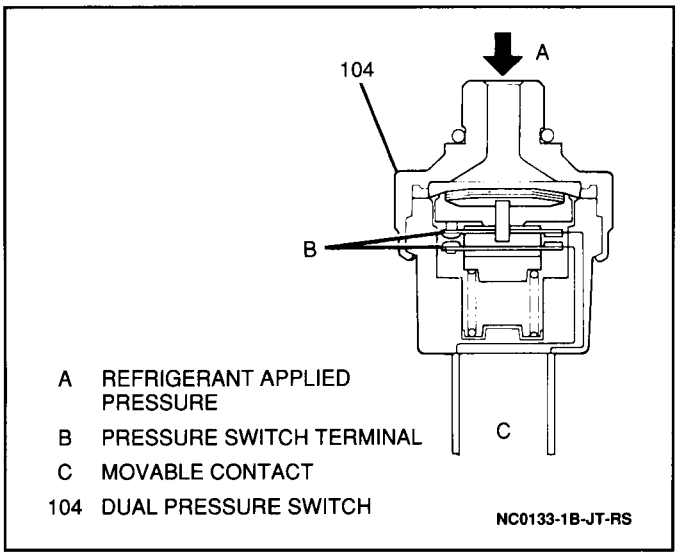

Figure 5 Dual Pressure Switch – Typical Sectional View

A/C Engine Coolant Temperature (ECT) Switch

The A/C ECT switch is used to stop A/C operation if the engine begins to overheat: at or above 113°C (235°F). When the switch opens, due to high engine coolant temperature, a signal is received at the A/C amplifier. Upon receiving this signal, the A/C amplifier cuts off A/C operation.

Evaporator Thermistor

A thermistor is a device which translates temperature into an electrical resistance. Thermistors are connected into electrical circuits to determine temperatures in critical areas. Thermistors are used in engine control systems as engine coolant temperature and intake manifold air temperature sensors. They are also widely used in air conditioning systems to determine temperatures at the evaporator core. If evaporator core temperatures drop to about 0°C (32°F), frost and ice will start to form on the evaporator fins. Ice formation on the evaporator fins seriously impedes the airflow through the evaporator and reduces the ability of the system to cool the vehicle's interior.

In order to prevent ice formation on the evaporator fins, this system incorporates an evaporator thermistor which is electrically connected to the A/C amplifier. When evaporator temperatures drop to 1°C (34°F), the A/C amplifier reads the corresponding thermistor resistance as a system cutout signal. When this signal is received, the A/C amplifier shuts down the compressor until evaporator core temperatures increase to 3°C (37°F).

A/C Amplifier

The A/C amplifier controls the operations of the vacuum switching valve and the compressor clutch in response to signals received from the dual pressure switch, the A/C engine coolant temperature (ECT) switch, the evaporator thermistor and the engine control module (ECM). With the air conditioning system in operation, the A/C amplifier performs the following functions:

- Energizes the A/C compressor clutch in response to air conditioning system request and upon determination of favorable system conditions for air conditioning operation.
- Control of engine idle speed during compressor operation.
- De-energizes the A/C compressor clutch in response to a high refrigerant pressure signal (from the dual pressure switch), a low refrigerant pressure signal (from the dual pressure switch), a high engine coolant temperature signal (from the A/C ECT switch), a low evaporator temperature signal (from the evaporator thermistor), or a high engine demand signal (from the ECM).

A/C Condenser Fan Relay and A/C Compressor Clutch Relay

These relays control the flow of electric current to the A/C condenser fan motor and the A/C compressor clutch.

AIR CONDITIONER CONTROLS

A/C Switch

Figure 6

Located on the instrument panel within the heater control panel, the A/C switch activates the A/C system and allows the vehicle's driver to operate and control air conditioner functions.

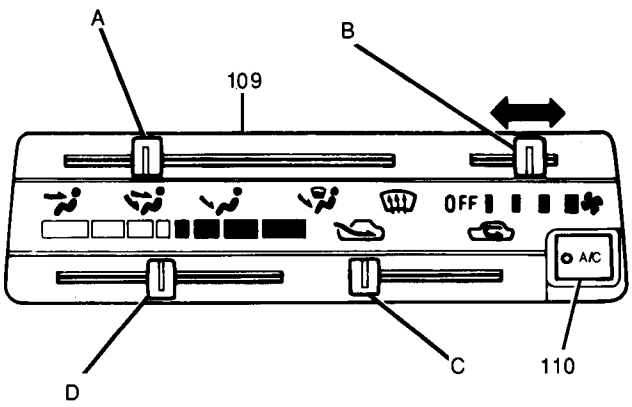

A MODE CONTROL LEVER
B BLOWER SPEED CONTROL LEVER
C FRESH/RECIRC CONTROL LEVER
D TEMPERATURE CONTROL LEVER
109 HEATER CONTROL UNIT
110 A/C SWITCH

NC1004-1B-JT-RS

Figure 6 A/C Switch

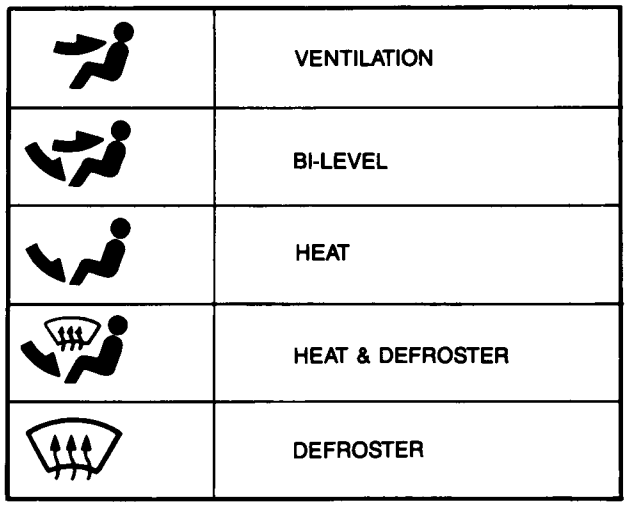

KC0073-1A-JT-SA

Figure 7 Mode Control Operation

Mode Control Lever

Figures 6 and 7

The air selector or mode control lever routes air through the various ducts in the passenger compartment. The air selector lever operates as follows:

1. Ventilation – In this position, air is discharged from the upper air outlets.
2. Bi-Level – The air flow is divided between the upper instrument panel outlets and the floor.
3. Heat – In this position, air is directed toward the floor outlet, along with a small amount to the windshield.
4. Heater and Defroster – air is directed to both the floor and the windshield.
5. Defrost – With the air selector lever in the defrost position, most of the air is directed to the front windshield, with a small amount delivered to the side windows and to the floor.

Blower Speed Control Lever

Figure 6

This lever controls the four-speed blower fan switch, further regulating the amount of air reaching the passenger compartment. The switch also acts as an A/C system control, as the A/C system will not operate if the blower speed control lever is in the "OFF" position.

Fresh/Recirc Control Lever

Figure 6

This lever is used to regulate the amount of fresh and/or recirculated air admitted to the heater system.

Temperature Control Lever

Figure 6

This lever controls the amount of airflow through and/or around the heater core, which is mixed with air cooled by the air conditioning system. This mixture of warm and cold air regulates the temperature and humidity of the air entering the passenger compartment.

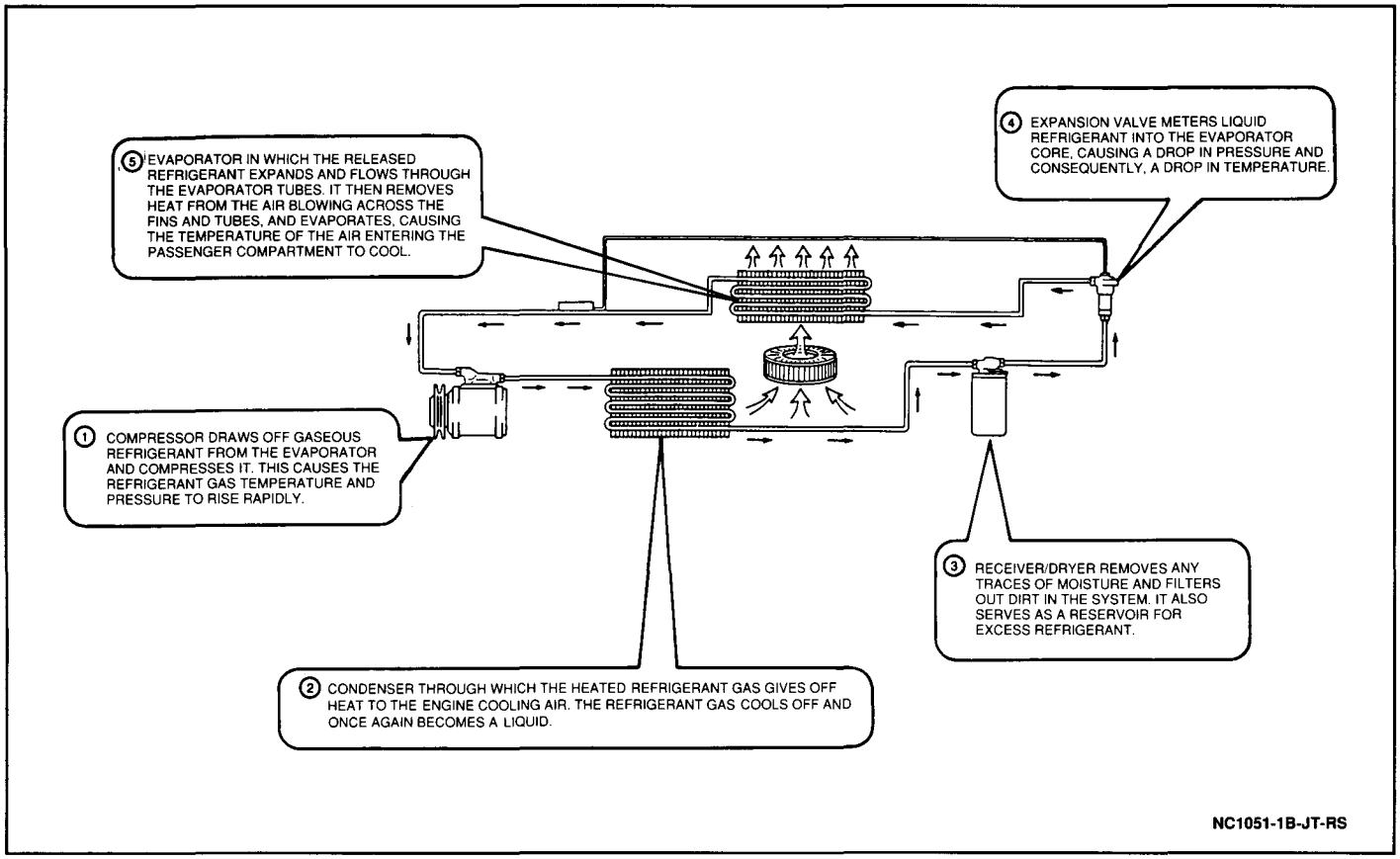

Figure 8 Refrigeration Cycle

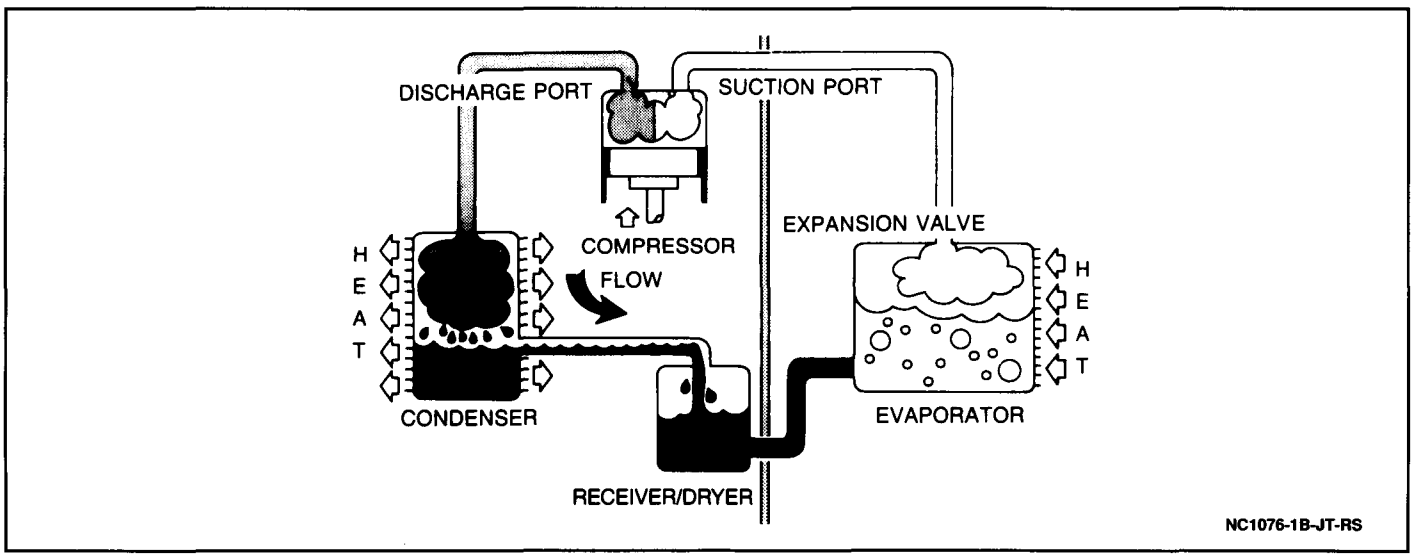

Figure 9 Refrigerant Flow

REFRIGERATION SYSTEM

Refrigeration Cycle

Figures 8 and 9

1. The compressor pumps high-temperature and high-pressure refrigerant containing the heat absorbed in the evaporator, as well as heat generated by the compressor itself.
2. From the compressor, this gaseous refrigerant flows into the condenser. In the condenser the refrigerant cools and condenses into a liquid state.
3. The liquid refrigerant then flows into the receiver/dryer, which stores and filters it until it's required by the evaporator.
4. The liquid then passes through the expansion tube and expansion valve, which meters the flow to the evaporator, further reducing the refrigerant's temperature and pressure.
5. The cold refrigerant liquid now enters the evaporator. The heat from the air passing through the evaporator is absorbed by the refrigerant fluid, and the air's humidity is drained off as water. The liquid refrigerant absorbs heat until it is converted into a gas. It is then drawn to the compressor via vacuum suction and the process is repeated.

DIAGNOSIS

GENERAL INFORMATION

Figure 10

Some conditions which are normal to proper air conditioning system operation may lead an owner to wrongly suspect a problem. Under conditions of high humidity, the air discharged from the air conditioning system may not feel as cold as expected. This is because the vaporized moisture in humid air heats more effectively than does dry air, making the humid air much harder to cool. In terms of overall comfort, however, the dryer dehumidified air coming from the air conditioning system in hot, humid weather will evaporate more moisture on a person's skin and provide more of a cooling effect than might be felt from cooler but more humid air. This fact should be explained to an owner if no mechanical cause can be found for a persistent complaint of insufficient cooling (Figure 10).

RELATIVE HUMIDITY (%)	AMBIENT AIR TEMP °F	°C	LOW SIDE kPa	PSIG	ENGINE SPEED (rpm)	CENTER DUCT AIR TEMPERATURE °F	°C	HIGH SIDE kPa	PSIG
20	70	21	200	29	2000	40	4	1034	150
	80	27	200	29		44	7	1310	190
	90	32	207	30		48	9	1689	245
	100	38	214	31		57	14	2103	305
30	70	21	200	29	2000	42	6	1034	150
	80	27	207	30		47	8	1413	205
	90	32	214	31		51	11	1827	265
	100	38	221	32		61	16	2241	325
40	70	21	200	29	2000	45	7	1138	165
	80	27	207	30		49	9	1482	215
	90	32	221	32		55	13	1931	280
	100	38	269	39		65	18	2379	345
50	70	21	207	30	2000	47	8	1241	180
	80	27	221	32		53	12	1620	235
	90	32	234	34		59	15	2034	295
	100	38	276	40		69	21	2413	350
60	70	21	207	30	2000	48	9	1241	180
	80	27	228	33		56	13	1655	240
	90	32	249	36		63	17	2069	300
	100	38	296	43		73	23	2482	360
70	70	21	207	30	2000	50	10	1276	185
	80	27	234	34		58	14	1689	245
	90	32	262	38		65	18	2103	305
	100	38	303	44		75	24	2517	365
80	70	21	207	30	2000	50	10	1310	190
	80	27	234	34		59	15	1724	250
	90	32	269	39		67	19	2137	310
90	70	21	207	30	2000	50	10	1379	200
	80	27	249	36		62	17	1827	265
	90	32	290	42		71	22	2275	330

KC0150-1B-B-RP

Figure 10 Performance Test

INSUFFICIENT COOLING CHECK

Figures 11 through 14

If outside air temperature is above 21°C (70°F), the following procedure can be used to quickly determine whether the air conditioning refrigeration system has the proper charge of R-12. This check can be made in a few minutes, simplifying system diagnosis by localizing the problem of a low refrigerant charge or eliminating that possibility.

The engine must be at normal operating temperature and running at normal idle speed. The hood and all body doors must be open. The air conditioning controls must be set for outside air induction, high blower speed and the coldest temperature setting.

When the compressor is operating, the technician should use a hand to feel the temperature of the evaporator inlet and outlet pipes. The evaporator inlet pipes should feel hot to the touch; the evaporator outlet pipe should feel cold. If the evaporator inlet pipe is cooler than the outlet pipe, or if the inlet pipe has a coating of frost, a low refrigerant charge is indicated. The technician should add 0.11 kg (0.250 lbs.) of R-12 and allow the system to stabilize. Refer to "Handling Refrigerant" later in this section. This should be repeated as necessary until the evaporator pipes are the correct temperature. Once this has been determined, another 0.40 kg (0.888 lbs.) of R-12 should be added to the refrigeration system.

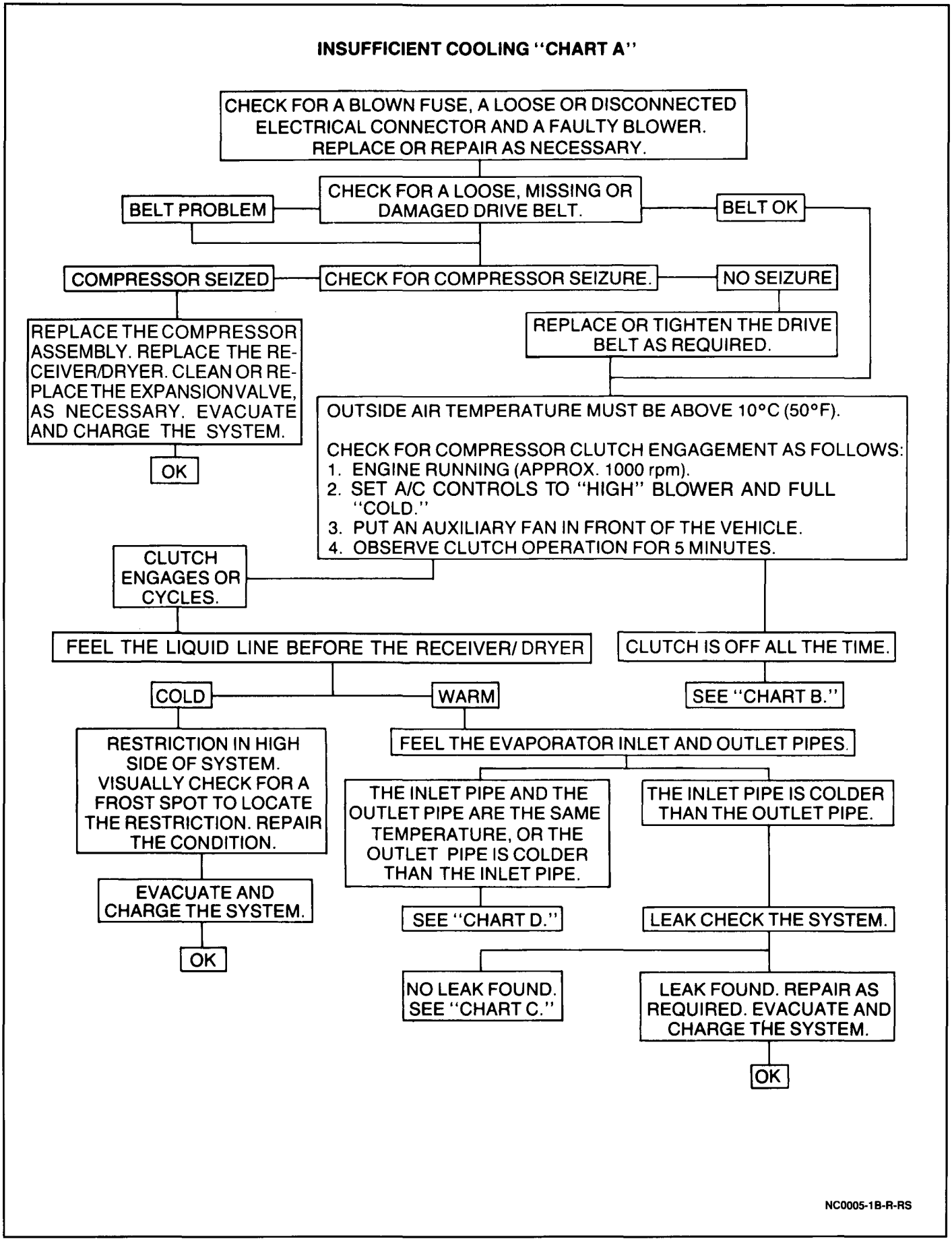

Figure 11 Insufficient Cooling Diagnostic Chart (1 of 4)

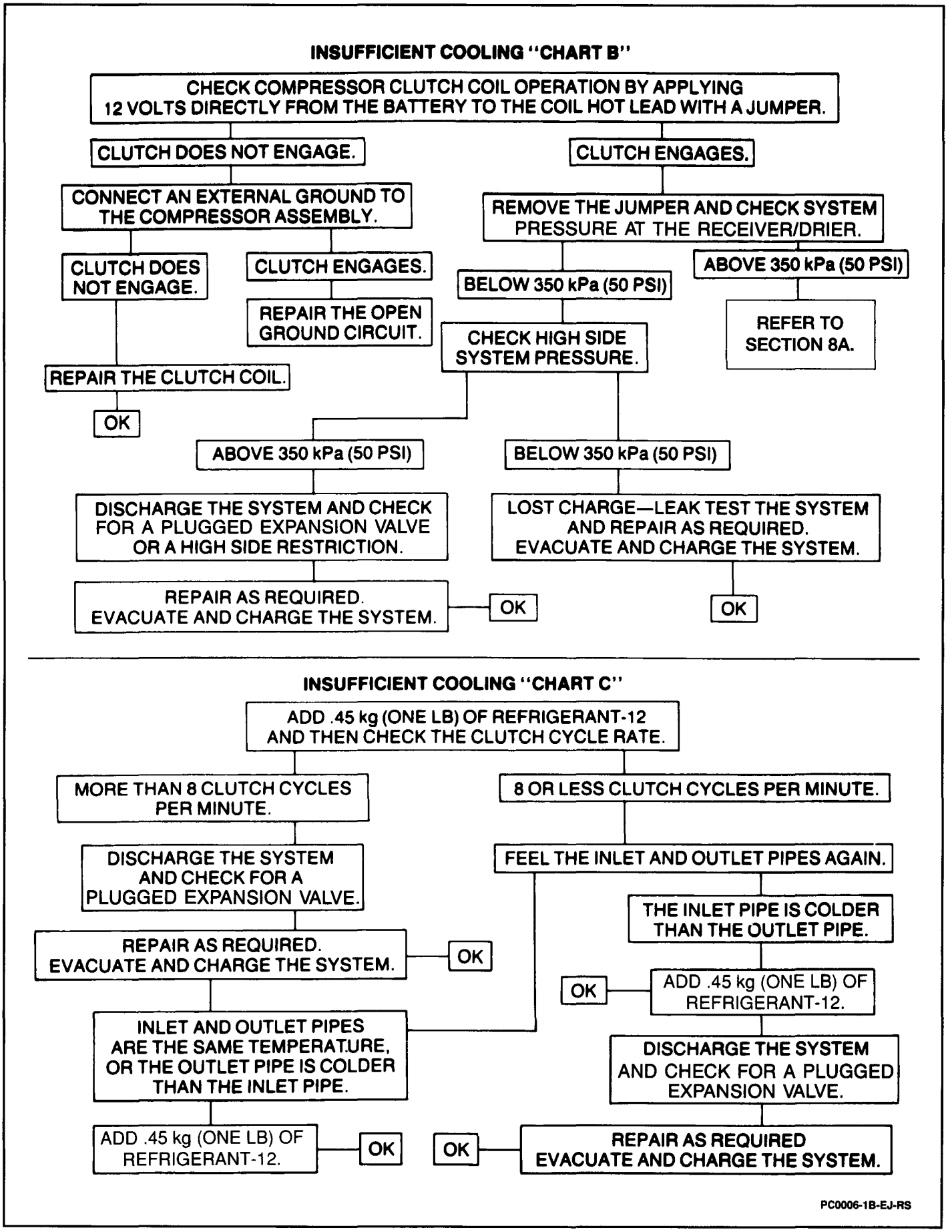

Figure 12 Insufficient Cooling Diagnostic Chart (2 of 4)

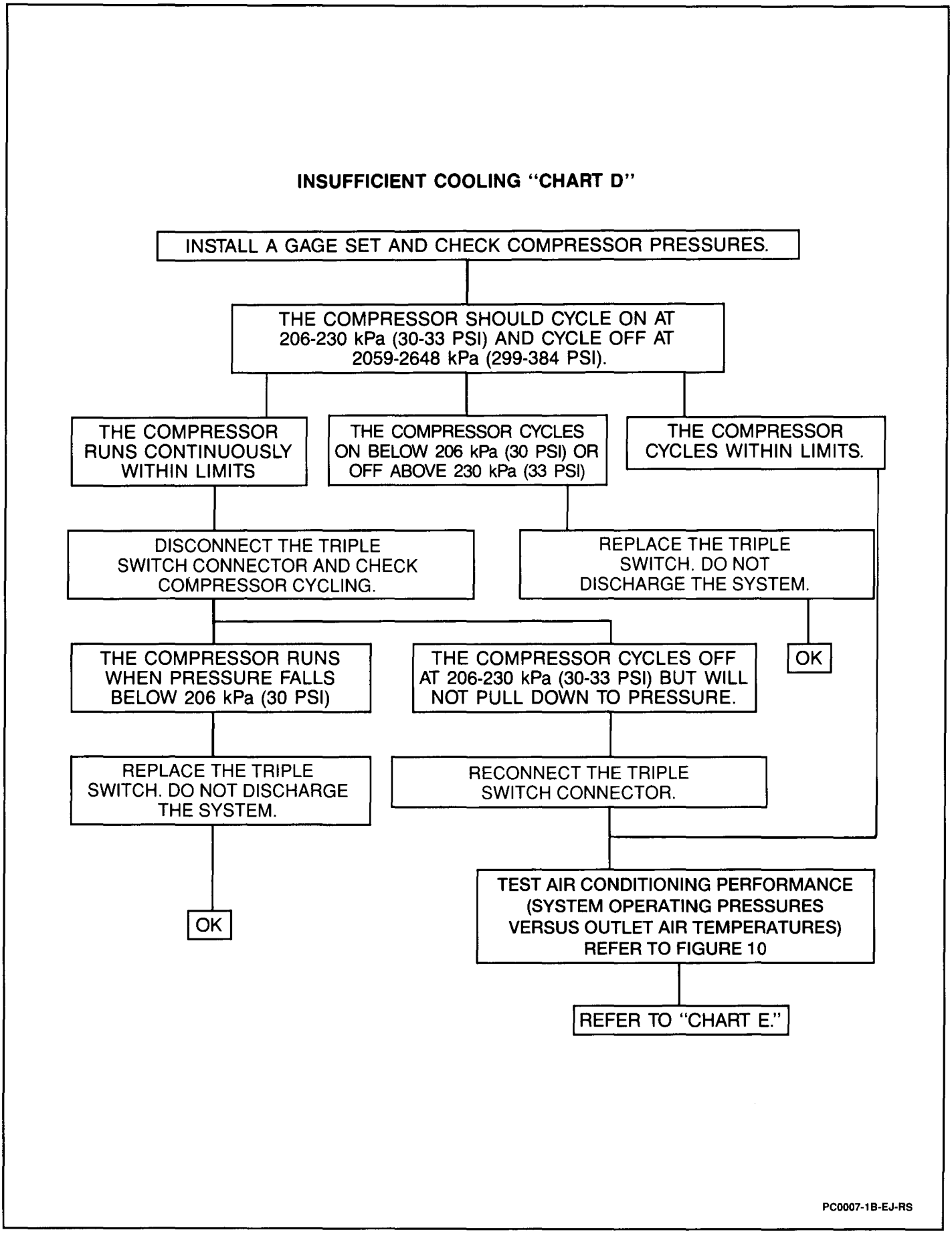

Figure 13 Insufficient Cooling Diagnostic Chart (3 of 4)

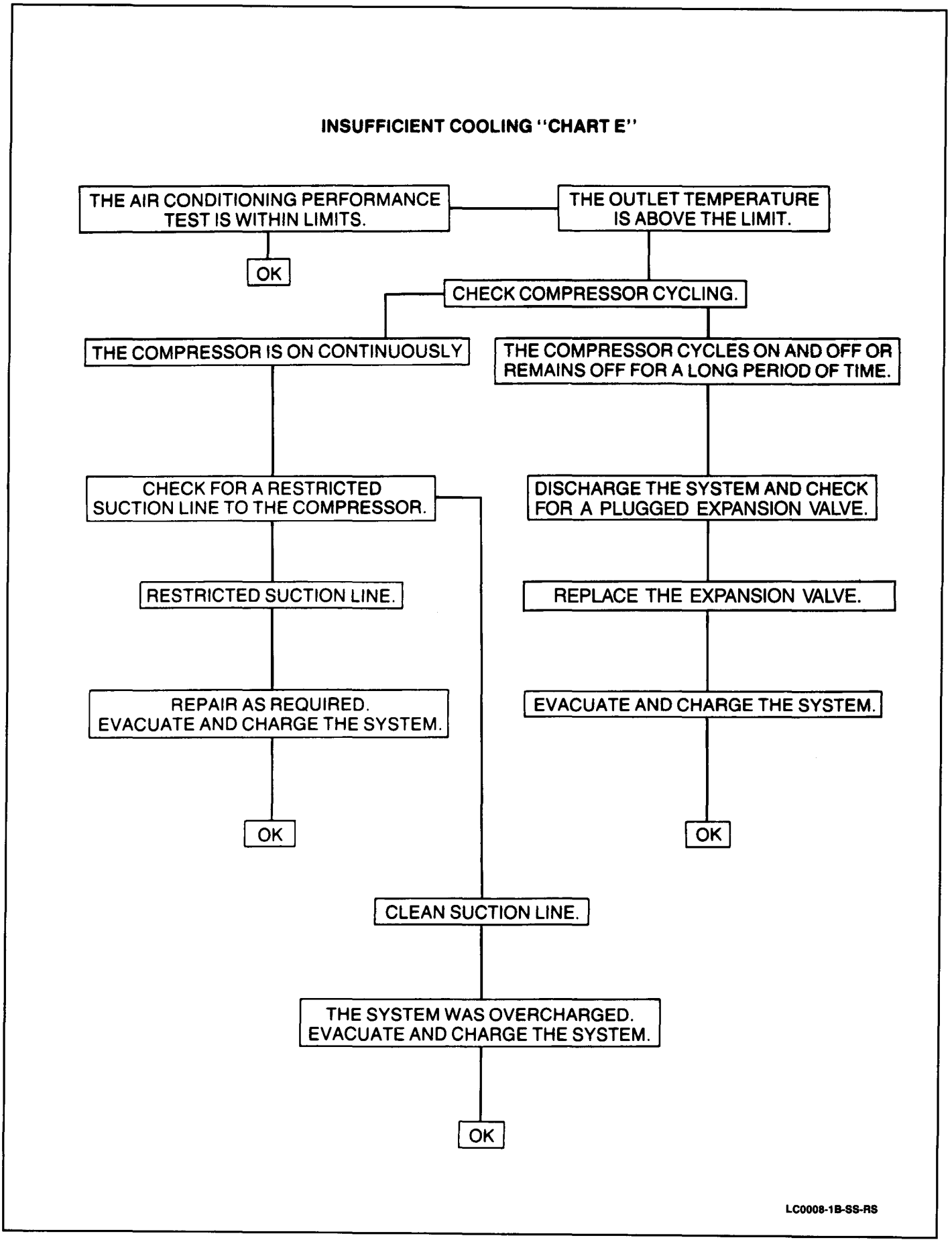

Figure 14 Insufficient Cooling Diagnostic Chart (4 of 4)

REFRIGERATION SYSTEM CHECKS

Figure 15

If a malfunction in the refrigerant system is suspected, check the following items:

1. Check the outer surfaces of the radiator and condenser cores to be sure that the air flow is not blocked by dirt, leaves or other foreign material. Be sure to also check the area between the condenser and the radiator.
2. Check for restrictions or kinks in the condenser core, hoses, tubes, and fins.
3. Check for proper blower motor operation. Refer to SECTION 8A.
4. Check the entire system for refrigerant leaks.
5. Check all air distribution ducts for leaks or restrictions. A low air flow rate may also be caused by a blocked evaporator core.
6. Check the compressor clutch for slippage.
7. Check that the compressor drive belt is properly tensioned.
8. Check the expansion valve for blockage.
9. Check the sight glass in the receiver/dryer for bubbles (which would indicate a low refrigerant charge or moisture in the refrigerant) (Figure 15).

For further air conditioning system diagnosis, refer to Figures 11 through 14 and to SECTION 8A.

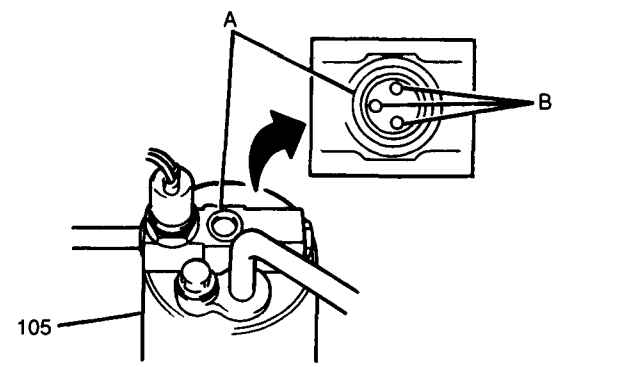

A SIGHT GLASS
B BUBBLE
105 RECEIVER/DRYER
NC0126-1B-JT-RS

Figure 15 Receiver/Dryer Sight Glass

LEAK TESTING THE REFRIGERATION SYSTEM

Test for leaks whenever a refrigerant leak is suspected and when performing a service operation which disturbs pipes or connections.

Liquid Leak Detectors

There are a number of locations (fittings, valves, etc.) on the air conditioning system where a liquid leak detector solution may be used to pinpoint refrigerant leaks. If there is a leak in a suspected area, bubbles will form in the area that the test solution is applied. In areas of restricted access (such as sections of the evaporator and condenser), an electronic leak detector is a more practical means of testing.

Red Dye Leak Detector

A red dye leak detector, is available to aid diagnosis of air conditioning refrigeration system problems. The dye is mixable both in the liquid refrigerant and in the compressor oil. The dye leaves the compressor in the oil which is carried along with the hot refrigerant gas. In the condenser, the dye and the oil are dissolved in the liquid refrigerant. In the evaporator, the dye remains in the oil when the refrigerant boils into a vapor. It is then returned with the oil to the compressor by the suction pipe.

Leaks show up in a matter of minutes on the suction side as easy-to-see red stains. Leak detection in the condenser and the liquid pipe may be slower and can appear as a faint pink color due to the low amount of red dye in the oil. In most cases, a bright red color (usually oil) will appear at the point of leakage. Most leaks show up in a short period of time – but some may take up to 24 hours before they possess enough color to become visible. If leaks develop in parts of the system which are difficult to see, or if dirt and oil have gathered around connections, the area can be wiped with a white cloth or paper towel to pick up any traces of the red dye. The red dye should be wiped up after repairing a leak so that the next technician does not think that he has found a leak in the same location.

If new dye is to be added to R-12, it must be charged as a liquid. If charged as a vapor, the dye will be left behind as a liquid in the container. Only GM-approved dye should be used. Other dyes may alter the chemical stability of the refrigerant or may curdle and clog the expansion valve or damage the compressor.

Red dye leak detector can stain some materials. It may be necessary to clean the dye from floors, hands and clothing. Use the following suggestions to prevent red dye stains:

- A cloth or paper towel should be wrapped around couplings and fittings before hoses/pipes containing red dye leak detector are disconnected.
- Valve or hose outlets should be surrounded with several layers of cloth before they are vented.
- Valves should be opened slowly. This will keep liquid refrigerant and oil from blowing out of the refrigeration system.
- Gloves and eye protection should be worn.
- Surfaces should be wiped quickly with a clean cloth.

Solvents that will help in removing the red dye include lacquer thinner, Virginia No. 10 solvent, Stoddard solvent and other similar solvents. The solvents are most effective if used right away. Most of the dye can be removed from clothing by conventional laundering methods.

Fluorescent Leak Detectors

Tool Required:
J 36790 Fluorescent Leak Detection Additive

J 36790 can be added to the air conditioning system refrigerant. With the engine running and the air conditioning system engaged, the technician can scan A/C

system components and pipes with an ultraviolet lamp for refrigerant leaks. Any leak, even the smallest pin hole, will be easy to spot as it will show up as a bright yellowish-green spot under the ultraviolet light.

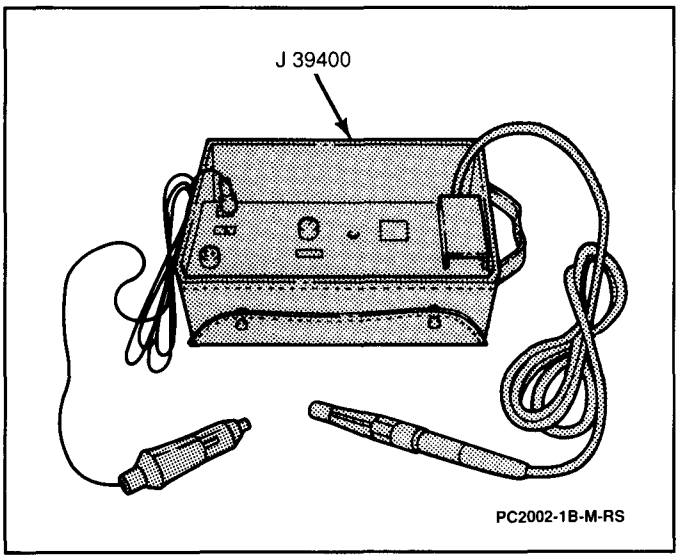

Figure 16 J 39400 Leak Detector

Electronic Halogen Leak Detector

Figures 13 and 14

Tools Required:
J 39400 Leak Detector
J 23575-B Manifold Gage Set

Electronic leak detectors have been found to be the most useful tool in locating refrigerant leaks. The J 39400 is small unit which operates on 12V DC current and provides an audible signal which increases in frequency as Refrigerant-12 is detected. There are three leak size settings: one for R-12, one for R134a, and one for gross. The gross leak setting is for isolating very large leaks already found in one of the other two settings. The instrument must be properly calibrated according to the manufacturer's instructions. The detector must be used in the proper setting for the type of refrigerant being tested.

Prior to the test, make sure the refrigerant system is sufficiently charged for leak testing by measuring the static pressure with a J 23575-B. System pressures above 50 PSIG are acceptable to conduct a leak test.

The most common leaks are found at the refrigerant fittings or connections. This may be caused by improper torque, damaged O-rings, lack of lubricant on the O-rings, or debris across the O-ring. Even the smallest piece of lint from cotton gloves or shop cloths can create a leak path across an O-ring.

The most successful use of this or any other electronic leak detector depends greatly upon the scan rate and upon carefully following the manufacturer's instructions regarding calibration, operation and maintenance. Each joint must be completely circled moving at 1 to 2 inches per second with the tip of the detector probe as close to the joint as possible (the detector must not be farther than 6.1 mm (0.25-inch) away from the joint) without blocking the probe's air intake. A leak is indicated when the audible tone goes from a steady 1 to 2 clicks per second to a solid alarm. The balance knob should be adjusted frequently to maintain the 1 to 2 clicks per second rate.

Important

- Halogen leak detectors are sensitive to windshield washer solvent, many other solvents, cleaners and some adhesives. Care should be taken to prevent a false warning by making sure all surfaces are clean. Also, surfaces should be dry since ingestion of liquids will damage the detector. To assure no gases are present that may cause a false warning, blow out engine compartment with air hose prior to test.

The dual pressure switch, pipe/hose connections, and the inlet and outlet pipes/hoses for all A/C components can easily be tested using this method (Figure 17).

Important

- Always follow the refrigerant system around in a continuous path so that no leaks are missed. Always test all the above areas to assure the entire system is leak free, even when one leak is already found.

CAUTION: Care must be taken to prevent personal injury which could occur due to touching a hot engine when testing. Tests should be done with the engine off and as cool as possible. Do not operate the detector in a combustible atmosphere since its sensor operates at high temperatures.

Service Ports/Access Valves

The primary seal for the service ports is the sealing cap. This cap contains a specially designed O-ring or gasket which provides a leak free seal. Should the cap become loose, missing or the wrong cap is used, it will result in the loss of refrigerant charge. Make sure the cap has a rubber seal.

Evaporator Core

One of the most difficult leaks to find is in the evaporator core because the core is encapsulated into a closed module and due to its inaccessibility to leak detector devices. To leak test the core:

1. Turn the blower fan on to high for 15 or more seconds then shut off.
2. Wait 10 minutes.
3. Remove blower motor case. Refer to SECTION 1A.
4. Insert leak detector probe into blower motor case opening. If the detector goes to a solid alarm, a leak has been found.

Compressor

1. Blow shop air behind and in front of the compressor clutch/pulley for at least 15 seconds.
2. Probe the compressor area. If the detector goes to a solid alarm, a leak has been found.

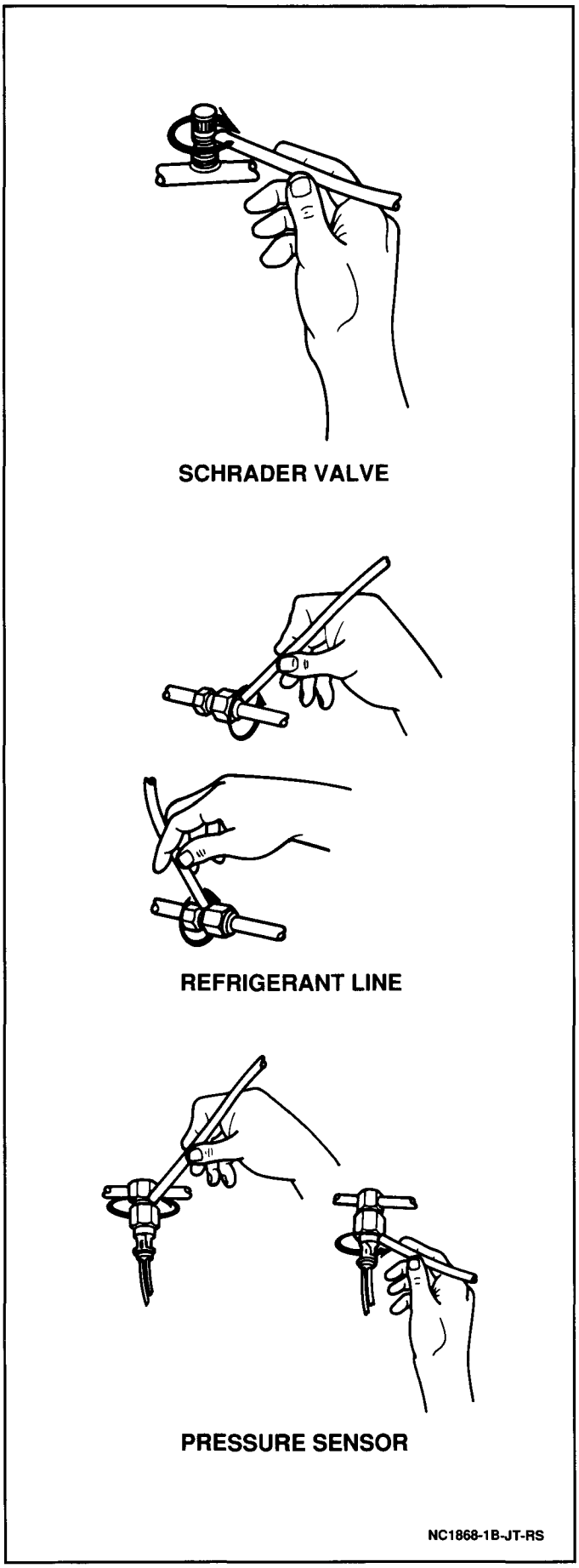

Figure 17 A/C Leak Scan Method – Typical

ELECTRICAL SYSTEM DIAGNOSIS

To diagnose problems in the air conditioning system's electrical circuitry, refer to SECTION 8A.

BLOWER NOISE

A constant air rush is typical of high-speed blower operation. Some systems and modes may be worse than others. If possible, check another similar vehicle to determine whether the noise is typical or excessive. For diagnosis of excessive blower noise, refer to SECTION 1A.

ON-VEHICLE SERVICE

CAUTION: For personal protection, goggles should be worn and a clean cloth wrapped around fittings, valves and connections when performing tasks which include opening the refrigeration system. If Refrigerant-12 comes in contact with any part of the body, personal injury through severe frostbite can result. The exposed area should be flushed immediately with cold water and prompt medical help should be obtained.

NOTICE: It is essential to tighten all tubing connections to the specified torque for the type and size of tube fitting. When tightening steel-to-aluminum connections, the torque specified for aluminum tubing must be used. Insufficient or excessive torque when tightening can result in loose joints or deformed joint parts. Either condition can result in refrigeration leakage and an inoperative air conditioning system. Refer to "Specifications" later in this section.

REFRIGERATION SYSTEM SERVICES

Replacing O-Rings

Install new GM-approved service replacement air conditioning O-rings when a joint or a fitting is installed, except when the O-rings are provided on new replacement components. Unless service replacement O-rings of the specified part numbers are used, excessive leakage of Refrigerant-12 may occur. Refer to the part number for identification, not to the former color-coating method of identification, because all formerly color-coated service replacement O-rings are now black.

Air conditioning O-rings should be coated with 525 viscosity refrigerant oil just prior to installation and should be slipped into the flange pipe to assure proper locating and sealing. To prevent the possibility of swelling and a reduction in sealing effectiveness, O-rings should not be soaked in refrigerant oil. Before installation, the O-rings and fittings should be examined to insure that they have not been nicked or deformed. Nicked or deformed parts must be replaced to prevent refrigerant leakage.

Handling Refrigerant-12

Before attempting any service which requires opening refrigeration system pipes/hoses or components, the technician should be thoroughly familiar with the information addressed under "Handling Refrigerant Pipes, Hoses and Fittings" and "Maintaining Refrigerant Chemical Stability" later in this section. The technician should also carefully follow the instructions under "Adding Oil, Evacuating and Charging the Refrigerant System" later in this section.

All Refrigerant-12 drums are shipped with a heavy metal screw cap to protect the valve and safety plug of the drum from damage. It is a good practice to replace the cap after each use of the drum to continue this protection.

When filling a small Refrigerant-12 drum from a larger one, the smaller drum should never be completely filled. Always allow some space at the top of the drum for refrigerant expansion.

Handling Refrigerant Pipes, Hoses and Fittings

When opening the refrigeration system, the work area should be well ventilated. Welding or steam cleaning operations should not be done on or near refrigeration pipes/hoses or other air conditioning components. All metal tubing pipes should be free of dents and kinks to prevent any loss of system capacity due to restrictions. Flexible refrigerant hoses should never be bent to such a degree that they become kinked. Flexible hoses should always be routed at least 63.5 mm (2.5-inches) away from the exhaust manifold. Refrigerant hoses should be inspected regularly for leaks and brittleness and replaced immediately if deterioration or leakage is discovered.

Before disconnecting any fitting in the refrigeration system, the system must first be discharged of all Refrigerant-12 and this refrigerant recovered for recycling. The technician should proceed cautiously, regardless of gage readings. The connection should be opened very slowly, keeping face and hands away so that no injury will occur if there is liquid Refrigerant-12 in the pipe/hose. If pressure is noticed when the fitting is loosened, the pressure must be allowed to bleed off. Refer to "Adding Oil, Evacuating and Charging the Refrigerant System" later in this section.

> **NOTICE:** Alcohol should never be used in the refrigeration system in an attempt to remove moisture. Damage to system components may occur.

If a refrigerant pipe/hose is opened to the atmosphere, it should be capped or taped to close the opening immediately and prevent entry of moisture and dirt. These contaminants can cause internal compressor wear and plugged pipes in the condenser and evaporator cores or expansion valve. Sealing caps should be removed from subassemblies just before making connections for final assembly. A small amount of clean 525 viscosity refrigerant oil should be used on all pipe and hose joints. New O-rings dipped in 525 viscosity refrigerant oil should be used when assembling joints. The oil will aid in assembly and help to provide a leak-proof joint. O-rings and seats must be in perfect condition since a burr or a piece of dirt can cause a serious refrigerant leak.

It is important to use the proper wrenches when connecting O-ring fittings. When tightening a joint, a second wrench should be used to hold the stationary part of the connection to prevent distortion of the connecting pipe/hose or components. When connecting a flexible hose connection, three wrenches should be used to hold the swaged fitting, the flare nut and the coupling to which it is attached. This method will prevent turning the fitting and damaging the ground seat. A solid feel when tightening a fitting indicates a proper assembly. Always refer to "Specifications" later in this section for the proper torque values on all connections.

Maintaining Refrigerant Chemical Stability

The efficient operation and life of the air conditioning system is dependent upon the chemical stability of the refrigeration system. If foreign materials such as dirt, air or moisture contaminate the refrigeration system, they will change the stability of Refrigerant-12 and 525 viscosity refrigerant oil. Contaminants also affect the pressure/temperature relationship of the refrigerant, reducing efficient operation and possibly cause interior corrosion and abnormal wear of moving parts.

Before disconnecting a refrigerant pipe/hose connection, any dirt or oil at or near the connection should be wiped away to reduce the possibility of foreign matter entering the system. Both sides of the opened connection should be capped, plugged or taped as soon as possible to prevent the entry of contaminants.

The manifold gage set (J 23575-B), tools and replacement parts must be kept clean and dry. When preparing to open the refrigeration system, everything needed should be ready and handy so as little time as possible will be required to perform the operation. The refrigeration system should not be left open any longer than necessary.

Refrigeration system service parts are dehydrated and sealed before shipping. They should remain sealed until just before making connections. All parts should be at room temperature before they are uncapped to prevent condensation of moisture from the air that has entered the system. If caps are removed but the connections are not made for any reason, the parts should be resealed as soon as possible.

When adding 525 viscosity refrigerant oil, the transfer device and container should be clean and dry to assure that the refrigerant oil remains as moisture-free as possible. Also refer to "Discharging, Adding Oil, Evacuating and Charging the Refrigerant System" later in this section.

Any refrigerant system that has been opened should be properly evacuated before recharging with Refrigerant-12. Refer to "Adding Oil, Evacuating and Charging the Refrigerant System" later in this section.

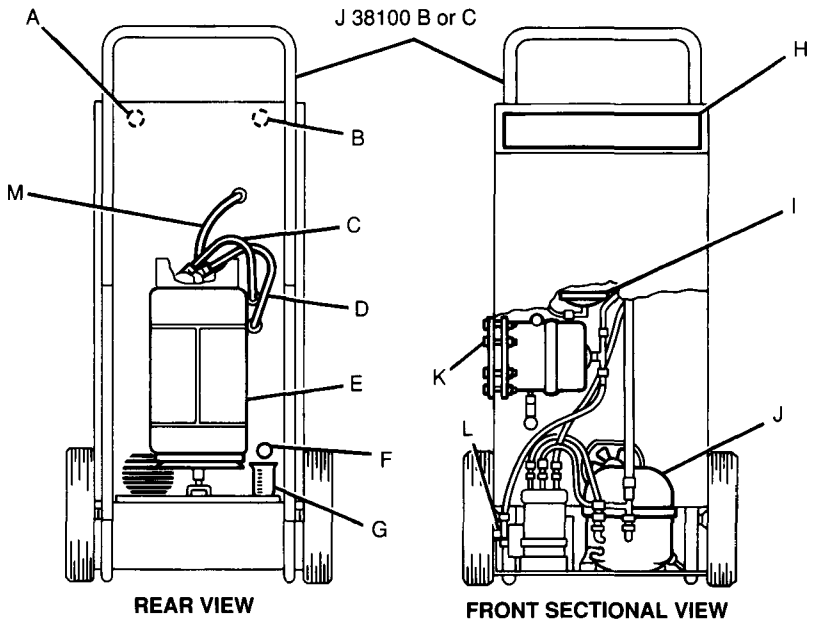

A	ACCUMULATOR PRESSURIZING VALVE	F	OIL DRAIN	K	FILTER DRIER
B	OIL DRAIN VALVE	G	OIL DRAIN MEASURED CONTAINER	L	REFRIGERANT PUMP
C	RED HOSE (VAPOR)	H	CONTROL PANEL	M	YELLOW HOSE (AIR PURGE)
D	BLUE HOSE (LIQUID)	I	ACCUMULATOR OIL SEPARATOR		
E	TANK	J	COMPRESSOR		

NC1501-1B-JT-RS

Figure 18 ACR³ Component Locations

AIR CONDITIONING REFRIGERANT RECOVERY, RECYCLING AND (ACR³) STATION SET UP

Figures 18 through 22

Important

- Recovery and recycling of automotive refrigerant is environmentally necessary because emission of Refrigerant-12 into the atmosphere causes depletion of the Earth's ozone layer, which filters out deadly ultraviolet light from the sun's rays.

The air conditioning refrigerant recovery and recycling station (ACR³) J 38100-B or C, is designed to be compatible with charging station J 23500-01 or its equivalent. The recovery and recycling operations are performed separately with the capability to recycle 13.6 kg. (30 lbs.) in one operation. Two 13.6 kg (30 lbs.) capacity reusable tanks are included with the station.

NOTICE: The air conditioning refrigerant recovery and recycling station meets UL® standards for moisture and contamination removal. Recovery systems which cannot meet these standards are not approved for for warranty repairs. Reuse of moisture or particulate contaminated refrigerant will result in premature compressor and other component failure.

Always wear goggles and wrap a clean cloth around fittings and/or connections when doing work that involves opening the refrigerant system. If liquid refrigerant comes into contact with the skin or eyes, injury may result.

- Before removing or replacing any of the air conditioning refrigeration pipes or components, the refrigerant must be completely recovered.
- Always use service valve and pressure gage sets during evacuation and charging procedures.
- Do not charge while compressor system is hot.
- Always check the A/C system for pressure with a manifold gage set to determine if refrigerant is present in the system. Performing recovery on an A/C system which is open to the atmosphere as a result of a leak would allow the recovery station to pull only air into the tank.

Station (ACR³) Setup and Maintenance

Recovery Tank Installation

CAUTION: Use authorized refillable refrigerant tanks only. Use of non-refillable tanks could cause personal injury and will void the station's warranty. Non-refillable tanks will affect weight platform calibration and will result in overfilled tanks. Overfilling could cause the safety valve to "pop-off" releasing a large quantity of refrigerant. If liquid refrigerant comes into contact with skin or eyes, personal injury may result.

1. The recovery tank is supplied with 68.95-103.4 kPa (10-15 psi) of dry nitrogen to keep it clean and dry

during shipment. Bleed this pressure from the tank before attaching the tank to the station by removing sealing cap and opening either valve. A new tank without the precharge of dry nitrogen indicates a leak and should be immediately returned for replacement (refer to recovery tank's instruction manual).

2. Place the tank on the scale platform at the rear of the station. Place the bottom lip of the tank around the outside diameter of the stand-off welded to the platform. This will center the tank automatically. Loosely fasten the strap around the tank in order to prevent the tank from tipping over.
3. Attach the red hose from the back of the station to a vacuum pump. Attach the blue hose from the back of the station to the liquid part of the tank. Attach the yellow hose to the purge elbow on the tank.
4. Open the liquid valve on the tank. Turn on the vacuum pump. Pull a vacuum on the tank and station for approximately ten minutes to remove all unwanted air from the tank and from the station.
5. After a vacuum has been pulled, turn off the vacuum pump and disconnect the hose from the vacuum pump. Attach the red hose to the vapor port on the tank and open the vapor valve.
6. Perform this procedure only when putting new tanks into service.

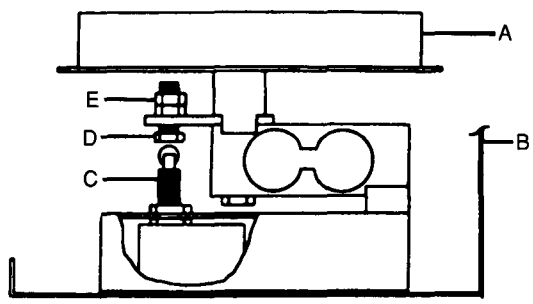

A PLATFORM ASSEMBLY
B STATION BACK PANEL
C TRIP SWITCH
D ADJUSTING SCREW
E LOCKNUT

NC1502-1B-JT-RS

Figure 19 Weight Platform Calibration

Weight Platform Calibration

Figure 19

The weight platform should be checked for accuracy at least once a month. This calibration will ensure that the compressor will shut off when the tank is full.

CAUTION: Use of nonrefillable tanks will affect platform calibration and will result in overfilling of nonrefillable tanks. Overfilling could cause the safety valve to "pop-off" releasing a large quantity of refrigerant. If liquid refrigerant comes into contact with the skin or eyes, personal injury may result.

1. Place a known 20.5 kg (45 lbs.) weight on the center of the platform. The platform switch should just trip or be very close to tripping with this amount of weight.
2. If the switch is tripped, the weight platform mechanism is in calibration. If the switch does not trip, place a 1 kg (2 lbs.) weight on top of the 20.5 kg (45 lbs.) weight. This weight should definitely trip the switch. If the switch is tripped, the platform mechanism is in calibration. If the switch did not trip, the platform mechanism must be recalibrated.
3. To recalibrate, remove 1 kg (2 lbs.) weight and loosen the lock nut of the trip screw. Turn the trip screw until the switch just trips. Remove the 20.5 kg (45 lbs.) weight.
4. To check, place a 20.5 kg (45 lbs.) weight on the platform and repeat Step 2. Repeat Step 3 as required. Tighten lock nut of the trip screw when recalibration is complete.

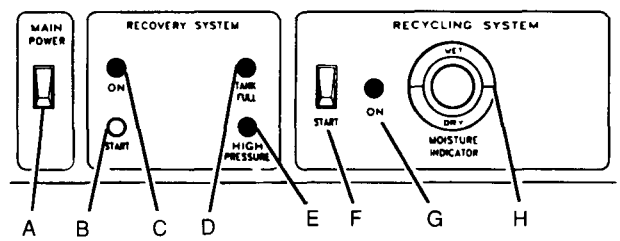

A MAIN POWER SWITCH — SUPPLIES ELECTRICAL POWER TO THE CONTROL PANEL
B COMPRESSOR START BUTTON — ENERGIZES COMPRESSOR
C COMPRESSOR ON INDICATOR — LIGHTS WHEN COMPRESSOR IS ENERGIZED
D RECOVERY FULL TANK INDICATOR — LIGHTS WHEN RECOVERY TANK IS FULL
E HIGH PRESSURE INDICATOR — LIGHTS WHEN SYSTEM SHUTS DOWN DUE TO OVER PRESSURIZATION
F RECYCLING SYSTEM START SWITCH — ENERGIZES RECYCLING PUMP
G RECYCLING SYSTEM ON INDICATOR — LIGHTS WHEN RECYCLING PUMP IS ENERGIZED
H MOISTURE INDICATOR — TELLS WHEN REFRIGERANT IS WET OR DRY — YELLOW = MOISTURE, GREEN = DRY

NC0023-1B-JT-RS

Figure 20 Control Panel

Control Panel

Figure 20

The control panel contains the switches and monitors as follows:

- Main Power Switch – supplies electrical power to the control panel.
- Compressor Start Button – energizes compressor.
- Compressor On Indicator – lights when compressor is energized.
- High Pressure Indicator – lights when there is pressure above 1827 kPa (265 psi) in system.
- Recovery Tank Full Indicator – lights when recovery tank is full.

- Recycling System Start Switch – energizes recycling pump.
- Recycling System On Indicator – lights when recycling pump is energized.
- Moisture Indicator – tells when refrigerant is wet or dry, or when filter core needs to be replaced.
- Filter Monitor – tells when filter is plugged.

Filter Drier Core Replacement

Tool Required:
J 38100-10 Filter Drier Core

Guidelines for replacing the filter drier core:

- For proper contamination removal, replace the filter drier core after recycling a maximum of 136 kg (300 lbs.) of refrigerant.
- If the moisture indicator does not change to green after two hours of filtering time, the filter drier core is saturated with moisture and should be changed.
- If the filter drier core becomes clogged with particulates, the filter monitor needle will register in the red zone; this also means the filter core should be changed.

CAUTION: Steps 2 and 3 are critical to avoid possible hazardous release of refrigerant. If liquid refrigerant comes into contact with the skin or eyes, injury may result.

NOTICE: Use only authorized filter drier cores. Use of any other cores will give unsatisfactory results and will void the warranty.

1. Close the liquid valve on the tank.
2. Attach the blue hose to the recovery inlet of the station.
3. Start the compressor and recover all refrigerant remaining in the station into the storage tank. The compressor will automatically shut off when recovery is complete.
4. Remove the bolts holding the filter cap to the shell. The filter drier core and bracket are attached to the filter cap.
5. Remove the tie rods from the filter cap and remove the filter drier core from the brackets.
6. Clean all internal parts.
7. Remove the filter drier core from the sealed can. Do not remove the filter from the can until ready to install it in the system.
8. If the filter cap gasket is damaged, replace it. Replacement gaskets are included with each filter drier core.
9. Center the spring on the filter cap and place the upper bracket on the spring with the center boss of the bracket fitting into the coil and the edges of the plate facing up.
10. Position the filter drier core on the upper bracket. Position the screened lower bracket on the filter drier core and install the tie rods. Tighten the tie rods until they stop.
11. Install the filter drier core assembly into the filter drier shell. Replace the bolts and tighten evenly, in a star pattern, to a torque of 20 N·m (15 lb.ft.).
12. When the core has been replaced and the filter drier reassembled, attach the blue hose to the vacuum pump and start the vacuum pump. Run the pump for approximately 10 minutes to remove all air.
13. Turn off the vacuum pump and disconnect the hose.
14. Reattach the blue hose to the "Liquid" port of the tank and open the "Liquid" valve on the tank. You are now ready to continue recycling with the station.

Refrigerant Recovery

Figures 20 and 21

Tools Required:
J 38100-B or C Air Conditioning Recovery and Recycling System
J 23500-01 Refrigerant Charging Station
J 23575-B Manifold Gage Set
J 36846 Hose Adapter Kit

The refrigerant system must be discharged using a J 38100-B or C. Following this procedure, the refrigerant system can then be evacuated and charged using a J 23500-01 or a J 23757-B and refrigerant.

Evacuation lines from the recovery system and the charging lines from the charging station or manifold and gage set require the use of adapters to connect to the A/C system low-side service fitting. A J 36846 contains all the adapters that should be required. Refer to "Special Tools" at the end of this section.

NOTICE: Failure to check for residual oil from the previous recovery can result in adding extra oil to the current vehicle being serviced. This will result in reduced performance and possible compressor damage. Refer to "Refrigerant Oil Distribution" later in this section.

1. Start vehicle and run with A/C on for two minutes, then attach a J 23575-B to the A/C system and attach the recovery station inlet hose to the center fitting of the J 23575-B.
2. Open both valves of the J 23575-B. Make certain the refrigerant tank vapor valve and the liquid valve are open.
3. Plug the station into a suitable AC power outlet and turn on the "Main Power" switch.
4. Depress the "Compressor Start" button. The amber "Compressor On" indicator will light and the compressor will start. The compressor will shut off automatically when recovery is complete. Wait two minutes and check for pressure rise. If a pressure rise occurs, press the "Compressor Start" button to repeat the recovery procedure.
5. To drain the accumulator of A/C system oil, open the "Accumulator Pressurizing" valve for 15 seconds to allow some compressor discharge pressure back into the accumulator. Open the oil drain valve slowly and drain the accumulator. When the oil stops draining, close the oil drain valve. Do not allow the accumulator to completely depressurize. Measure the discarded oil and add that amount to the A/C system during the charging procedure. Refer to "Adding Oil, Evacuating and Charging Refrigerant System," later in this section.

Important

- Although refrigerant can be filtered and recycled at any time, it is recommended to recycle when the tank is full for greatest efficiency. Two tanks are provided so you can fill one, recycle it, and use it for charging systems while filling the second tank. When the recovery tank is full, the "Trip Switch" at the bottom of the weight platform will de-energize the compressor and the "Tank Full" indicator will light. Close both tank valves, remove the tank from the platform, and replace with another refillable tank or recycle the first tank. If the tank isn't immediately recycled take precautions to prevent its use in A/C systems BEFORE it is recycled. Additional refrigerant tanks (P/N 17105) are available, see the "Replacement Parts" section of your ACR³ operators manual.

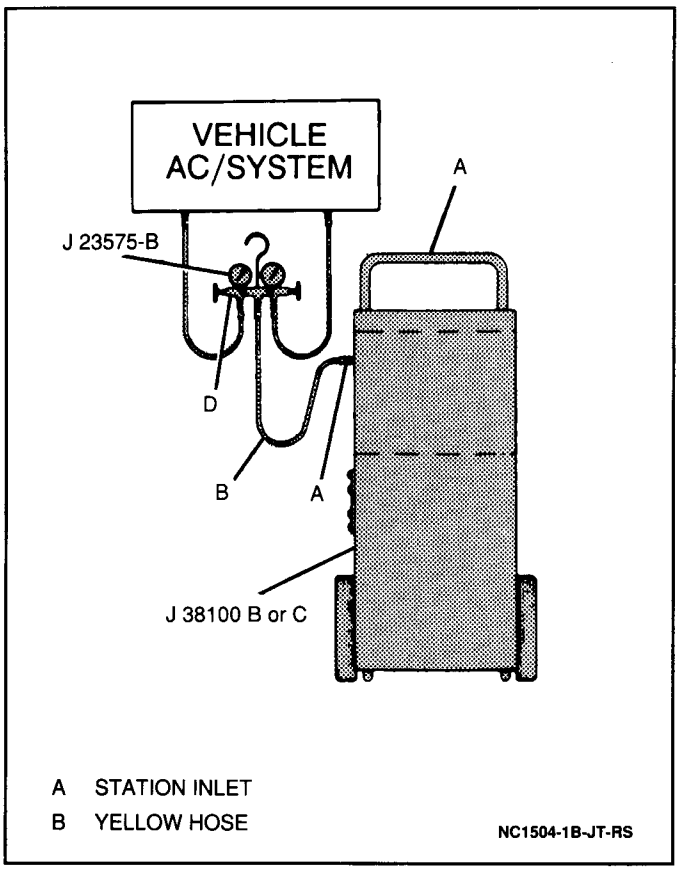

Figure 21 ACR³ Hook Up

Refrigerant Recycling

Figure 20

1. Plug the station into a suitable AC power outlet and press the "Main Power" switch to the on position.
2. Open both valves on the recovery tank.
   - For efficiency, recycle full tanks of refrigerant.
3. Press the "Recycle Start" switch to on. The amber "Recycle On" indicator will light and the refrigerant pump will start.
4. Refrigerant will be seen going through the "Moisture Indicator" at start up. If there is a sufficient supply of refrigerant, the bubbles will clear after a few seconds. When the bubbles clear from the "Moisture Indicator," the refrigerant pump is operating at maximum efficiency.
5. Allow the station to operate until the dot in the center of the "Moisture Indicator" turns green. The "Moisture Indicator" should change to the shade indicated on the reference decal. Always run the recycling system a minimum of 30 minutes. If the "Moisture Indicator" starts out yellow, it could take as long as two hours to turn green, depending on the moisture content of the refrigerant.
6. Shut off the station when recycling is complete. This is not an automatic function.

Guidelines For Replacing The Filter Drier Core:

- For proper contaminant removal, replace the filter drier core recycling a maximum of 138 kg (300 lbs.) of refrigerant.
- If the moisture indicator does not change to green after two hours of filtering time, the filter drier core is saturated with moisture and should be changed.
- Check the A/C system oil from the accumulator with an acid test kit to determine the acid quantity of the oil.

Operating Hints

1. When using the recovery station in conjunction with a charging station, attach the center port hose of the J 23575-B to the inlet port of the ACR³ station. Then follow the normal operating procedures for the recovery/recycling station.
2. When using the ACR³ station in conjunction with an automatic charging station, attach the exhaust hose to the inlet of the ACR³ station. On automatic A/C service stations, a hole has been added at the rear of the cabinet for convenient access to the exhaust hose. On older style stations, you must open the front doors of the cabinet to reach the exhaust hose. After attaching the exhaust hose to the ACR³ station, press the "Main Power" switch on the automatic charging station. Then depress the "Exhaust" switch. Then follow the normal operating procedures for the ACR³ station.
3. Air is automatically vented from the recovery tank during recycling. This feature eliminates the need to "purge" hoses before recovering the refrigerant.
4. Operating the engine with the A/C off during recovery may reduce the recovery time by increasing the temperature in the accumulator area.
5. To help prevent the escape of refrigerant to the atmosphere, the ACR³ can be attached to a dial-a-charge cylinder top vent port when filling the cylinder.
6. Always check the ACR³ station for residual oil from the previous recovery, refer to Step 5 in "Refrigerant Recovery," earlier in this section.

TROUBLESHOOTING GUIDE

SYMPTOM	CAUSE	CURE
RECOVERY COMPRESSOR DOES NOT START	• POWER CORD NOT PLUGGED IN, OR NO POWER AT PLUG	• CHECK CIRCUIT FOR POWER
	• RECYCLE SWITCH IS ON OR MAIN POWER SWITCH IS OFF	• BE SURE RECYCLE SWITCH IS OFF AND MAIN POWER IS ON
	• HIGH LOAD ON COMPRESSOR	• OPEN ACCUMULATOR PRESSURIZING VALVE FOR APPROXIMATELY 5 SECONDS, THEN CLOSE
	• TANK FULL LIGHT IS ON	• CHANGE TANK
		• RECALIBRATE WEIGHT PLATFORM
	• HIGH PRESSURE LIGHT IS ON	• CHECK VALVES ON TANK TO BE SURE THEY ARE OPEN
		• CHECK SCALE CALIBRATION
		• CALL ASSISTANCE NUMBER BELOW
	• BAD COMPONENTS – START SWITCH, RELAY, COMPRESSOR, ETC.	• CALL ASSISTANCE NUMBER BELOW
RUNS A SHORT TIME, BUT DOES NOT COMPLETE RECOVERY	• TANK VALVES NOT OPEN	• OPEN BOTH TANK VALVES
	• HIGH INLET PRESSURE	• OPEN ACCUMULATOR PRESSURIZING VALVE 10 SECONDS, THEN CLOSE
	• LOW OIL LEVEL IN COMPRESSOR	• CALL ASSISTANCE NUMBER BELOW
	• BAD COMPONENTS, COMPRESSOR, RELAY, ETC.	• CALL ASSISTANCE NUMBER BELOW
RUNS BUT WON'T SHUT OFF	• LEAK IN VEHICLE SYSTEM	• PRESSURE MUST BE PRESENT IN MANIFOLD GAUGES BEFORE STARTING RECOVERY OPERATION
	• ACCUMULATOR PRESSURIZING VALVE OR OIL DRAIN VALVE NOT CLOSED	• CLOSE BOTH VALVES
	• BAD COMPONENTS, VACUUM SWITCH, ETC.	• CALL ASSISTANCE NUMBER BELOW
RECYCLING OPERATION		
SYMPTOM	**CAUSE**	**CURE**
REFRIGERANT PUMP DOES NOT APPEAR TO BE RUNNING	• POWER CORD NOT PLUGGED INTO GOOD POWER SUPPLY	• CHECK CIRCUIT FOR POWER
	• MAIN POWER SWITCH OFF	• TURN ON
	• TANK VALVES NOT OPEN	• OPEN VALVES
	• FAULTY COMPONENTS, PUMP, SWITCH, ETC.	• CALL ASSISTANCE NUMBER BELOW
BUBBLES WILL NOT CLEAR IN MOISTURE INDICATOR	• TANK VALVES NOT OPEN	• OPEN VALVES
	• NOT ENOUGH REFRIGERANT IN TANK – MUST HAVE 8 lbs. MINIMUM	• RECOVER MORE REFRIGERANT BEFORE RECYCLING
MOISTURE INDICATOR WILL NOT TURN GREEN AFTER 2 HOURS RUNNING	• WET OR PLUGGED FILTER CARTRIDGE	• REMOVE AND REPLACE FILTER CARTRIDGE (J-38100-10). BE SURE TO PULL VACUUM (REFER TO INSTRUCTIONS)
	• NOT ENOUGH REFRIGERANT IN TANK – MUST HAVE 8 lbs. MINIMUM	• RECOVER MORE REFRIGERANT BEFORE RECYCLING
	• FAULTY MOISTURE INDICATOR	• REMOVE AND REPLACE MOISTURE INDICATOR

FOR ASSISTANCE IN SERVICING OR USING YOUR ACR³ SYSTEM, CALL THE KENT-MOORE TOLL FREE SERVICE LINE 1-800-345-2233

NC1000-1B-M-RS

Figure 22 Troubleshooting Guide

ADDING OIL, EVACUATING AND CHARGING THE REFRIGERATION SYSTEM

Figure 23

Tools Required:
- J 38100-B or C Air Conditioning Recovery and Recycling Station
- J 23500-01 Refrigerant Charging Station
- J 23575-B Manifold Gage Set
- J 36846 Hose Adapter Kit
- J 34119 Vacuum Pump
- J 39400 Leak Detector

CAUTION: A gage line should never be removed from its adapter when the line is connected to the refrigeration system. The line adapter should always be removed from the service fitting to disconnect a line. The charging hose should not be removed from the gage set while attached to the low-pressure side service fitting. This may result in complete discharge of the refrigeration system. The accidental complete discharge may cause personal injury from the escaping Refrigerant-12.

The air conditioning refrigeration system must be discharged by using the J 38100-B or C. Refer to "Air Conditioning Refrigerant Recovery, Recycling and (ACR^3) Station Set Up" earlier in this section.

The air conditioning refrigeration system may be evacuated and charged by using the J 23500-01. As an alternative, the J 23575-B may be used with a J 34119 vacuum pump and a reliable scale to charge with a 13.6 kg (30 lbs.) drum of refrigerant.

Charging lines from the charging station or gage hoses from the J 23575-B require the use of adapters to connect to the refrigeration system service fitting. For this purpose, the J 36846 has been made available.

Before removing and replacing any of the air conditioning refrigeration system pipes/hoses or components, the system must be completely discharged. Refer to "Air Conditioning Refrigerant Recovery, Recycling and (ACR^3) Station Set Up" earlier in this section. The system service valve and J 23575-B must be used for evacuating and charging the system.

The system should be discharged and the entire evacuating and charging procedure should be done through the low-pressure side service fitting. The high-pressure gage hose or any other service line should never be connected to the high-pressure side service fitting during discharging and charging procedures. The system should not be charged while it is hot.

Gage Calibration

Before evacuating or charging the system, the low-pressure gage should be checked for proper calibration. With the gage disconnected from the refrigeration system, the pointer should indicate to the center of the zero mark ("0"). The gage should be tapped gently a few times to assure that the pointer is not sticking.

If it is necessary to calibrate the low-pressure gage, the cover should be removed for access to the pointer. With the pointer adjusting screw held still, the pointer should be carefully forced to indicate zero ("0"). After the gage is gently tapped a few times to assure that the pointer is not sticking, the gage cover should be installed.

Vacuum System Check

Before connecting the vacuum pump to the refrigeration system, the low-pressure gage should be connected to the pump and the pump should be run to determine the vacuum capability of the pump. If the pump is unable to produce a vacuum of at least 94.6 kPa (28 in. Hg), the vacuum system should be checked for leaks. If no leaks are found, the vacuum pump may require repair.

Discharging the Refrigeration System and Recovering Refrigerant

When any refrigeration system component except the pressure cycling switch is replaced, all of the Refrigerant-12 in the refrigeration system must be completely discharged and recovered by using an approved air conditioning refrigerant recovery system. The system must always be discharged at the low-pressure side service fitting to control the loss of refrigerant oil. Oil loss will occur if the high-pressure side service fitting is used.

1. With the ignition switch in the "OFF" position, remove the protective cap from the low-pressure side service fitting.
2. Connect the refrigerant recovery station following the equipment manufacturer's instructions.
3. With the low-pressure side of the refrigeration system fully discharged, the high-pressure side service fitting should be checked for any remaining pressure.
4. If refrigerant under pressure remains in the high-pressure side of the system, an attempt should be made to discharge the high-pressure side of the system by using the same procedure as used for the low-pressure side service fitting. Noticeable residual pressure in the system indicates a restriction in the high-pressure side of the system. The cause for this pressure must be diagnosed and corrected before evacuating and charging the system.
5. When the system is completely discharged and the refrigerant stored in the recovery tank, the technician should measure, record the amount and discard the refrigerant oil that was collected in the recovery system accumulator.
6. If the measured quantity of oil is 15 ml (0.5 fl. oz.) or more, the same amount of new 525 viscosity refrigerant oil must be added to the system, plus any quantity in the removed parts. This must be done before evacuating the system and charging it with Refrigerant-12. For the specific quantity of oil normally retained in the removed part, refer to "Refrigerant Oil Distribution" later in this section.

Adding Oil

Refrigerant oil must be added after the refrigeration system has been discharged and before it is evacuated. To add oil, the refrigeration system suction hose should be disconnected at the receiver/dryer outlet pipe connection. The correct quantity should be poured into the hose. The hose should then be connected to the pipe. For specific quantity instructions, refer to "Refrigerant Oil Distribution" later in this section.

drain 40 ml (1.35 fl.oz.) of refrigerant oil from the new compressor prior to installation.40 ml (1.35 fl.oz.) of refrigerant oil remain in the other A/C system components.

- If the evaporator is removed, 20 to 30 ml (0.67 to 1.0 fl.oz.) of new oil must be added to the system.
- If the condenser is removed, add 20 to 30 ml (0.67 to 1.0 fl.oz.) to the refrigeration system.
- If the receiver/dryer is removed, 10 ml (0.33 fl.oz.)

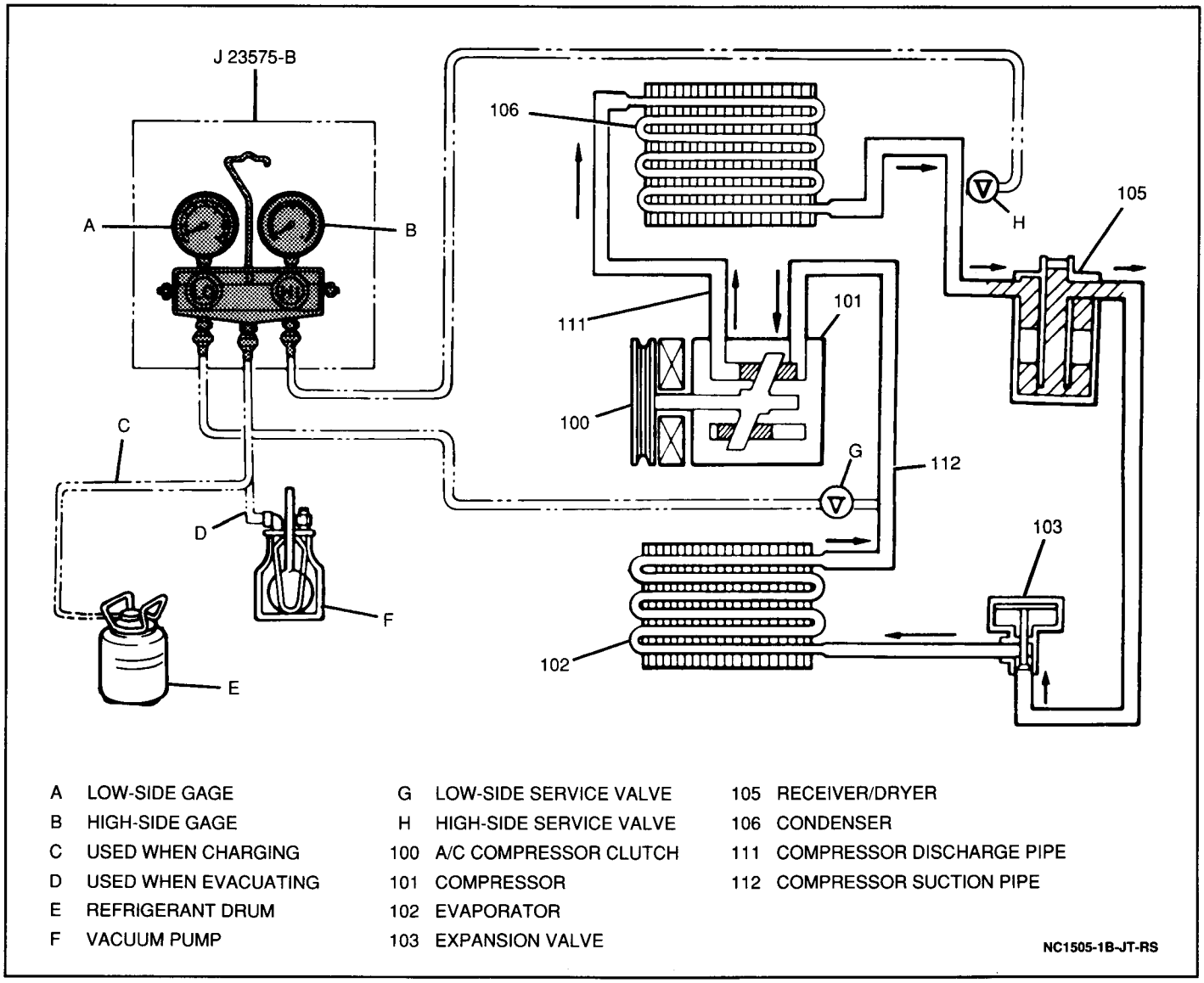

Figure 23 Charging the A/C System

Refrigerant Oil Distribution

The refrigeration system requires a total of 80 ml (2.7 fl.oz.) of 525 viscosity refrigerant oil. New oil must be added to the system during component replacement to keep this oil level constant.

With no signs of excessive oil leakage, oil should be added in the following prescribed manner:

- New compressor assemblies are filled with 80 ml (2.7 fl.oz.) of refrigerant oil from the factory. Since this is the capacity of the entire refrigeration system,

of oil must be added to replace the oil trapped in the desiccant of the original receiver/dryer.

With signs of excessive oil leakage, only the receiver/dryer should be removed. The oil in the receiver/dryer should be drained, measured and recorded. It is not necessary to remove and drain the compressor because it retains only a minimum quantity of oil.

With signs of excessive oil leakage, oil should be added in the following prescribed manner:

- If less than 40 ml (1.35 fl.oz.) of oil was retained in the receiver/dryer, 40 ml (1.35 fl.oz.) of new oil should be added to the system.
- If more than 40 ml (1.35 fl.oz.) of oil was retained, an equal amount of new oil should be added.

Refrigerant Loss from an Abrupt Leak

If the refrigerant charge is abruptly lost due to a large refrigerant leak, approximately 40 ml (1.35 fl.oz.) of refrigerant oil will be carried out of the system suspended in the refrigerant. Any failure that causes an abrupt refrigerant discharge will result in this oil loss. Failures that allow the refrigerant to seep or bleed off over time do not cause this oil loss.

Upon replacement of a component which caused a large refrigerant leak, add 40 ml (1.35 fl.oz.) of new 525 viscosity refrigerant oil plus the required amount of oil for the particular component.

Add the oil directly to the replaced component if possible. If the oil cannot easily be added to the replaced part, add the oil to the receiver/dryer.

Evacuating and Charging the Refrigeration System

The charging instructions provided with the charging station should be adhered to with the following exceptions:

- The high-pressure line should not be connected to the refrigeration system.
- The high-pressure valve on the charging station should remain closed at all times.
- The entire evacuating and charging procedure should be done through the low-pressure side service fitting.

Following these procedures will prevent high-side system pressure from getting to the charging station. This can become crucial if an error is made in the manifold gage valve sequence during the compressor operation to pull in the R-12.

Refrigerant Drum Method

The Refrigerant-12 drum should be placed on a scale and the total weight noted before charging. During charging, the scale should be monitored to determine the amount of refrigerant used.

The low-pressure gage of the J 23575-B should be connected at the low-pressure side service fitting. The high-pressure gage should be connected to the J 34119. The J 23575-B center gage hose should be connected to the Refrigerant-12 drum. The 13.6 kg (30 lbs.) drum incorporates its own control valve.

To begin evacuating the refrigeration system, the high-pressure side and low-pressure side gage valves should be opened slowly and the vacuum pump should be started. The system should be pumped until the low-pressure side gage reaches a vacuum reading of 94.6 to 97.9 kPa (28 to 29 in. Hg) at sea level. For each 305 m (1,000-feet) above sea level, this specification should be lowered by 3.38 kPa (1.0 in. Hg). At 1,525 m (5,000-feet) elevation, a vacuum reading of only 77.7 to 81.1 kPa (23 to 24 in. Hg) is required.

If the specified vacuum cannot be reached, the vacuum control valve should be closed and the pump should be shut off. Then the pump and connection should be checked for a leak.

When the low-pressure side gage reaches the specified vacuum reading, the system is fully evacuated. The high-pressure side gage valve should be closed and the vacuum pump should be shut off.

The low-pressure side gage should be watched to be sure the vacuum holds for five minutes. If vacuum is held for five minutes, the vacuum hose should be disconnected at the high-pressure side gage and charging should begin. If vacuum does not hold for five minutes, the system should be charged with 0.23 kg (0.5 lbs.) of Refrigerant-12 and a check made for refrigerant leaks. The system should be discharged and the refrigerant recovered before repairing the leak(s). Then the evacuation procedure should be repeated.

Charging

To prepare for charging the refrigeration system, the engine should be started and run until it reaches operating temperature. The A/C switch should be in off.

With the engine at operating temperature, the refrigerant source valve should be opened to allow 0.23 kg (0.5 lbs.) of liquid Refrigerant-12 to flow into the system through the low-pressure side service fitting.

As soon as this quantity of refrigerant enters the refrigeration system, the compressor should be engaged by pressing the A/C switch and moving the blower speed switch to any position but "OFF." This will draw in the remainder of the total refrigerant charge. The total charge is 500 g (17.6 oz.).

Charging speed can be increased by placing a large volume fan in front of the vehicle to pass more air over the condenser. If condenser temperature is maintained below the temperature of the charging drum, Refrigerant-12 will enter the system more rapidly.

When the full charge is added, the Refrigerant-12 source valve should be turned off and the engine allowed to run for 30 seconds to clear the lines and gages.

CAUTION: A gage hose should never be removed from its adapter when it is connected to the refrigeration system. The hose adapter from the service fitting always should be removed to disconnect a hose. The charging hose at the gage set should not be removed while the hose is attached to the low-pressure side service fitting. This may result in complete discharge of the system and may cause personal injury from escaping Refrigerant-12.

With the engine running, the low-pressure side charging hose adapter should be removed from the low-pressure side service fitting. It must be unscrewed rapidly to avoid releasing excessive refrigerant from the system.

After replacing the protective cap on the low-pressure side service fitting and turning off the engine, a leak test should be performed using the J 39400. Refer to "Leak Testing the Refrigeration System" earlier in this section. With the refrigeration system fully charged and leak-tested, the air conditioning system should be tested to ensure proper performance. Refer to "Refrigeration System Checks" earlier in this section.

COMPRESSOR DRIVE BELT INSPECTION AND ADJUSTMENT

Figures 24 and 25

Routine inspection of the compressor drive belt may reveal small cracks in the belt ribs. The technician must decide whether or not these cracks are serious enough to impair belt performance – requiring belt replacement. If any sections of the belt are missing, the belt should be replaced immediately.

Inspect

1. Belt for proper alignment on the compressor and the crankshaft drive pulley (Figure 24).

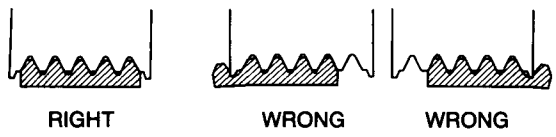

Figure 24 Compressor Drive Belt Alignment

2. Compressor mounting brackets for cracks or structural fatigue.
3. Compressor drive belt tension using thumb pressure and adjust to specification, if necessary (Figure 25).

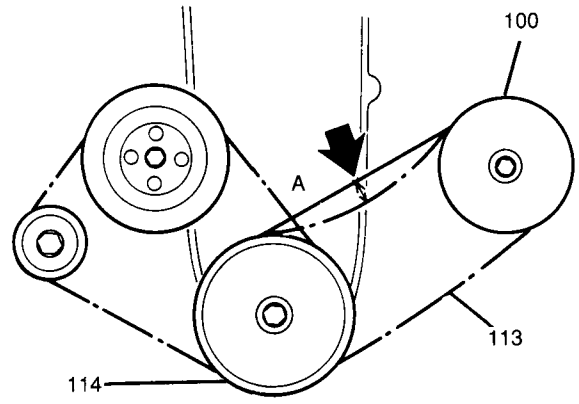

A COMPRESSOR DRIVE BELT DEFLECTION AS LOADED WITH 10 kg (22 LBS.) 5–6.5 mm (0.20-0.25")
100 A/C COMPRESSOR CLUTCH
113 COMPRESSOR DRIVE BELT
114 CRANKSHAFT PULLEY
PC1105-1B-EJ-RS

Figure 25 Compressor Drive Belt Tension

- Adjust belt tension by loosening the compressor mounting bolts and repositioning compressor along the upper mounting bracket axis.

Tighten

- Compressor mounting bolts to:
  Upper compressor-to-bracket mounting bolts – 28 N·m (21 lb.ft.).
  Lower compressor-to-bracket mounting bolts – 45 N·m (33 lb.ft.).

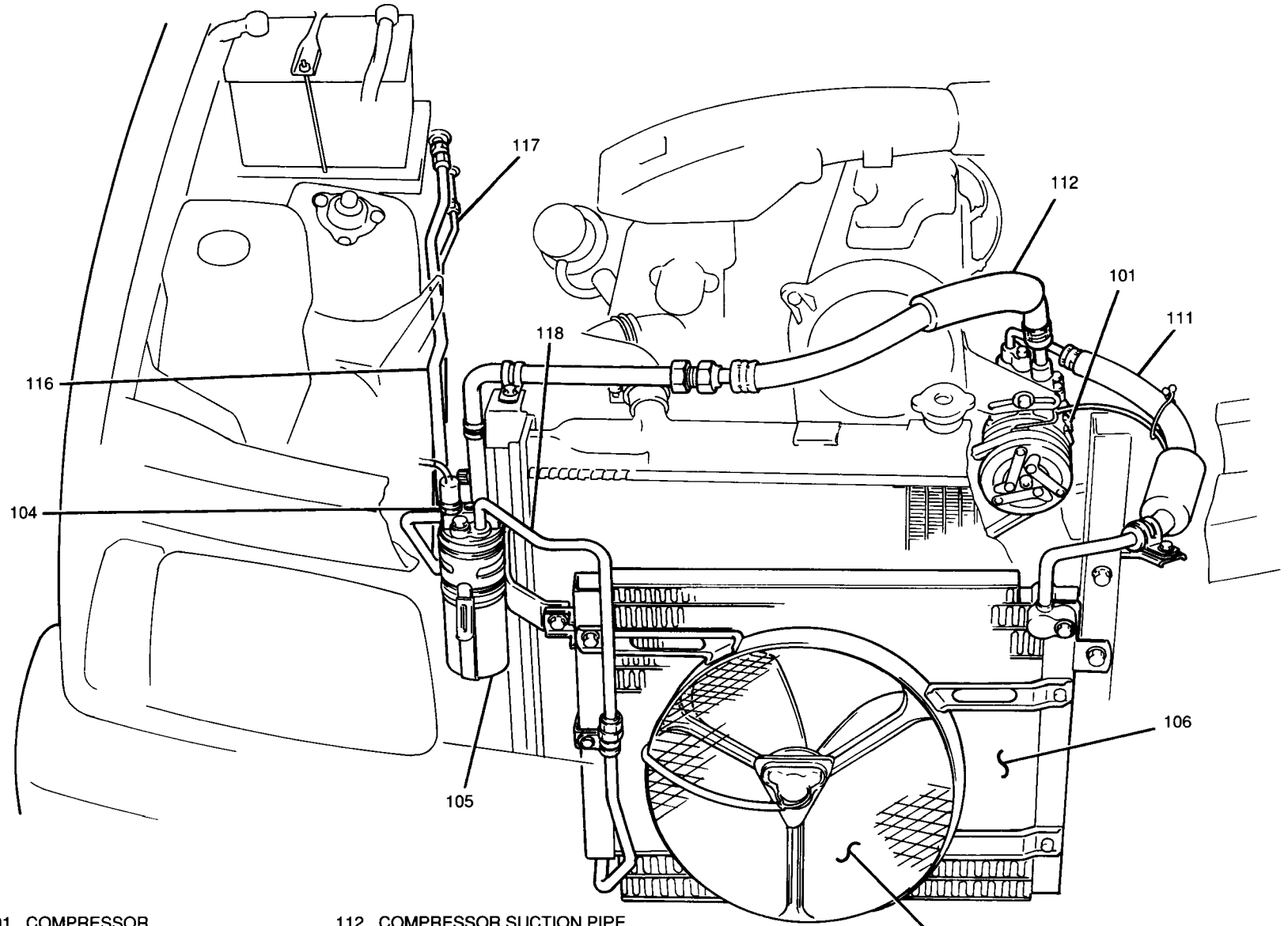

101	COMPRESSOR	112	COMPRESSOR SUCTION PIPE
104	DUAL PRESSURE SWITCH	116	EVAPORATOR OUTLET PIPE
105	RECEIVER/DRYER	117	EVAPORATOR INLET PIPE
106	CONDENSER	118	RECEIVER/DRYER INLET PIPE
111	COMPRESSOR DISCHARGE PIPE	119	CONDENSER FAN

NC0120-1B-JT-RS

Figure 26 A/C Components

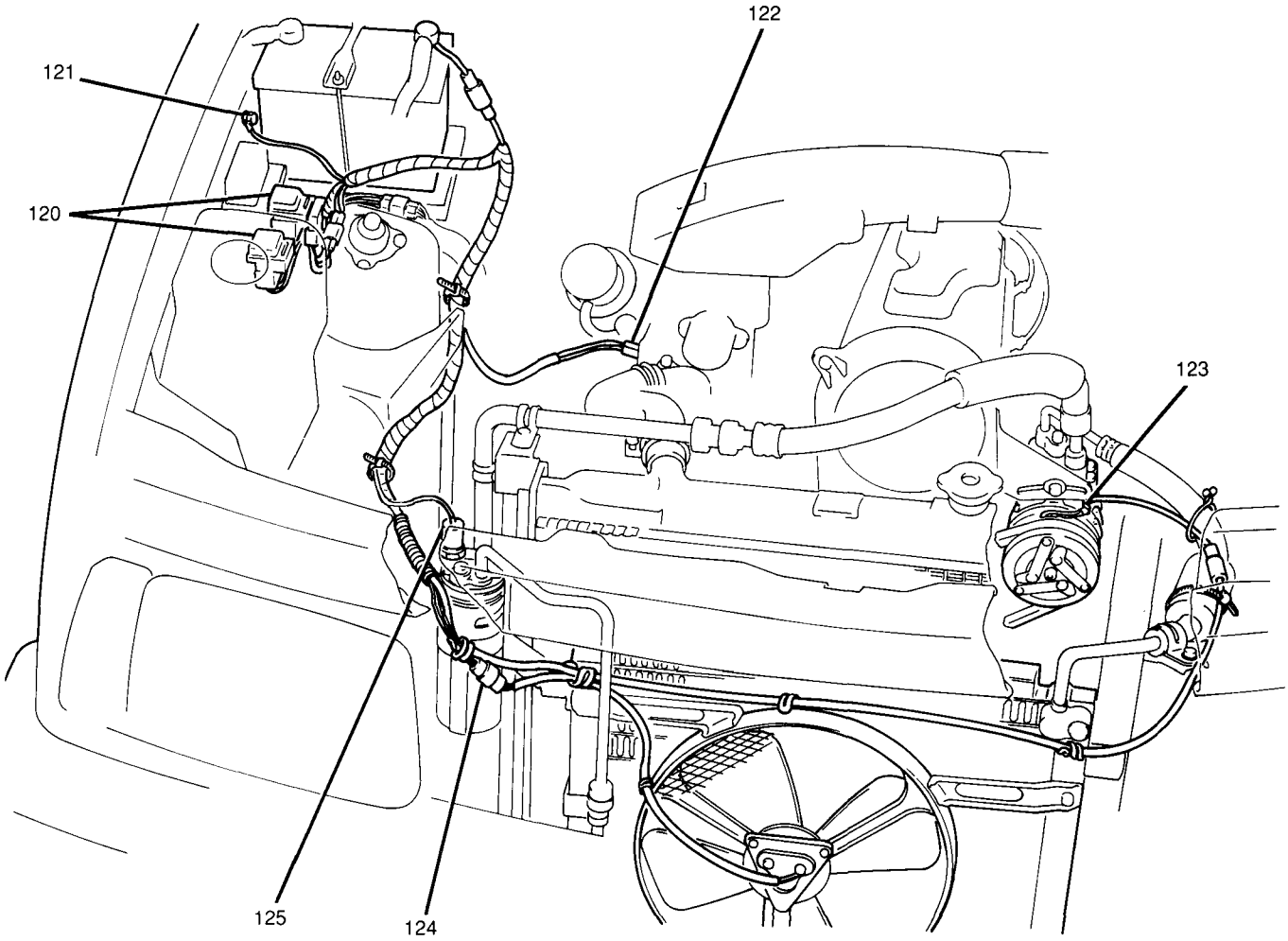

120 A/C COMPRESSOR CLUTCH AND CONDENSER FAN MOTOR RELAYS

121 GROUND

122 A/C ENGINE COOLANT TEMPERATURE (ECT) SWITCH ELECTRICAL CONNECTOR

123 A/C COMPRESSOR CLUTCH ELECTRICAL CONNECTOR

124 A/C CONDENSER FAN MOTOR ELECTRICAL CONNECTOR

125 DUAL PRESSURE SWITCH ELECTRICAL CONNECTOR

PC0119-1B-EJ-RS

Figure 27 A/C Wiring Harness

REPLACEMENT PROCEDURES

CAUTION: Before replacing any A/C component or opening the refrigeration system in any way, the system must be discharged of all Refrigerant-12 and that refrigerant recovered. Refer to "Air Conditioning Refrigerant Recovery, Recycling and (ACR³) Station Set Up" earlier in this section.

A/C Switch

Figure 6

Remove or Disconnect

1. Negative (-) battery cable.
2. Heater control panel. Refer to SECTION 1A.
3. A/C switch from wiring harness connector and heater control panel.

Install or Connect

1. A/C switch to heater control panel.
2. Switch connector to wiring harness.
3. Heater control panel. Refer to SECTION 1A.
4. Negative (-) battery cable.

Tighten

- Negative (-) battery cable-to-negative (-) battery terminal retainer to 15 N·m (11 lb.ft.).

A/C Condenser Fan Relay and A/C Compressor Clutch Relay

Figure 27

The following procedures apply to both the A/C compressor clutch relay and the A/C condenser fan relay. They are located on the right fender shroud under the hood.

Remove or Disconnect

1. Negative (-) battery cable.
2. Electrical connector from relay.
3. Relay from mounting unit.

Install or Connect

1. Relay into mounting unit.
2. Relay electrical connector.
3. Negative (-) battery cable.

Tighten

- Negative (-) battery cable-to-negative (-) battery terminal retainer to 15 N·m (11 lb.ft.).

Condenser

Figure 28

Remove or Disconnect

NOTICE: Cap all open fittings to prevent moisture and other contaminants from entering and damaging the A/C system.

- Discharge and recover refrigerant. Refer to "Air Conditioning Refrigerant Recovery, Recycling and (ACR³) Station Set Up" later in this section.

1. Negative (-) battery cable.
2. Front grille and grille net. Refer to SECTION 10-5.
3. Horn electrical connector.
4. Horn from vehicle (one bolt).
5. Radiator core center brace (four bolts).
6. Front end upper panel from radiator core support (six upper bolts, four lower bolts).
7. Condenser-to-receiver/dryer (condenser outlet) pipe from pipe fitting in front of radiator (one nut).
8. Compressor-to-condenser (condenser inlet) pipe from condenser fitting (one bolt).
9. Condenser fan electrical connector.
10. Four condenser mounting bolts (Figure 28).

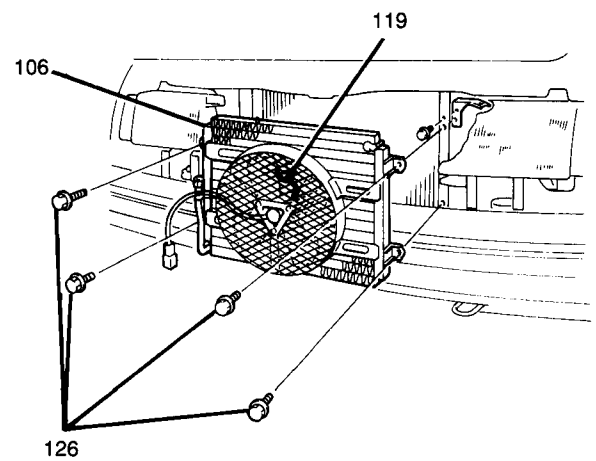

106 CONDENSER
119 CONDENSER FAN
126 CONDENSER MOUNTING BOLTS
NC0118-1B-JT-RS

Figure 28 Condenser and Fan

11. Condenser and fan from vehicle.
12. Condenser fan from condenser (four bolts).

Inspect

- Condenser fins for blockage and damage.
- Condenser fittings for leaks.

NOTICE: Be careful not to damage condenser fins. If fins are bent, straighten them with pliers or a fin straightening tool. If any leakage is found, repair or replace leaking component.

Install or Connect

1. Condenser fan to condenser; secure with four mounting bolts.

Tighten

- Condenser fan mounting bolts to 15 N·m (11 lb.ft.).

2. Condenser and fan to vehicle; secure with four mounting bolts.

Tighten

- Condenser mounting bolts to 20 N·m (15 lb.ft.).

3. Compressor-to-condenser (condenser inlet) pipe to condenser fitting; secure with one bolt.
4. Condenser-to-receiver-dryer (condenser outlet) pipe to fitting in front of radiator.

Tighten

- Compressor-to-condenser (condenser inlet) pipe fitting bolt to 25 N·m (18 lb.ft.).
- Condenser-to-receiver/dryer (condenser outlet) pipe fitting nut to 35 N·m (26 lb.ft.).

5. Condenser fan electrical connector.
6. Front end upper panel to radiator core support; secure with six upper bolts, four lower bolts.

Tighten

- Front end upper panel bolts to 20 N·m (15 lb.ft.).

7. Radiator core center brace; secure with four bolts.

Tighten

- Radiator core center brace bolts to 20 N·m (15 lb.ft.).

8. Horn to vehicle; secure with one bolt.

Tighten

- Horn bolt to 15 N·m (11 lb.ft.).

9. Horn electrical connector.
10. Front grille and grille net. Refer to SECTION 10-5.
11. Negative (-) battery cable.

Tighten

- Negative (-) battery cable-to-negative (-) battery terminal retainer to 15 N·m (11 lb.ft.).

- Evacuate and charge A/C system. Refer to "Adding Oil, Evacuating and Charging the Refrigeration System" earlier in this section.
- Operate A/C system and check for refrigerant leaks. Refer to "Leak Testing the Refrigerant System" earlier in this section.

Important

- If condenser was replaced, 20 to 30 ml (0.7 to 1.0 oz.) of refrigerant oil must be added to compressor suction-side. Refer to "Adding Oil, Evacuating and Charging the Refrigeration System" earlier in this section.

Receiver/Dryer

Figures 29 and 30

Remove or Disconnect

NOTICE: Cap all open fittings to prevent moisture and other contaminants from entering and damaging the A/C system.

- Discharge and recover refrigerant. Refer to "Air Conditioning Refrigerant Recovery, Recycling and (ACR³) Station Set Up" later in this section.

1. Negative (-) battery cable.
2. Dual pressure switch electrical connector.
3. Receiver/dryer inlet and outlet pipes at fittings.
4. One screw and receiver/dryer from mounting bracket (Figures 29 or 30).

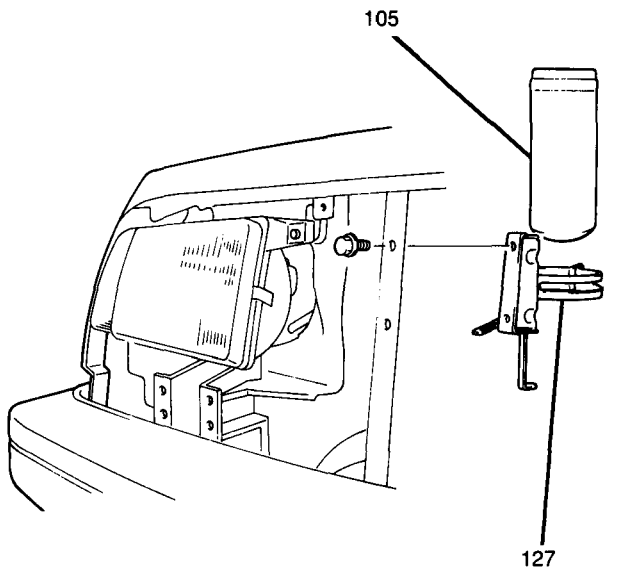

105 RECEIVER/DRYER
127 RECEIVER/DRYER MOUNTING BRACKET
NC0116-1B-JT-RS

Figure 29 Receiver/Dryer – Manual Transmission Equipped Vehicles

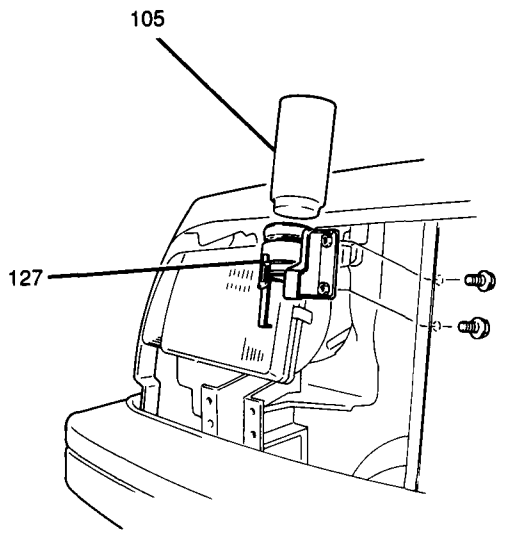

105 RECEIVER/DRYER
127 RECEIVER/DRYER MOUNTING BRACKET
NC0117-1B-JT-RS

Figure 30 Receiver/Dryer – Automatic Transmission Equipped Vehicles

Install or Connect

1. Receiver/dryer to mounting bracket; secure with one screw.
2. Receiver/dryer inlet and outlet pipes at fittings; secure with pipe bolt.

Tighten

- Receiver/dryer pipe fitting bolts to 35 N·m (26 lb.ft.).

3. Dual pressure switch electrical connector.
4. Negative (-) battery cable.

Tighten

- Negative (-) battery cable-to-negative (-) battery terminal retainer to 15 N·m (11 lb.ft.).

- Evacuate and charge A/C system with Refrigerant-12. Refer to "Adding Oil, Evacuating and Charging the Refrigeration System" earlier in this section.
- Operate A/C system and check for refrigerant leaks. Refer to "Leak Testing the Refrigerant System" earlier in this section.

Important

- If receiver/dryer was replaced, 10 ml (0.3 oz.) of refrigerant oil must be added to compressor suction-side. Refer to "Adding Oil" earlier in this section.

Compressor

Figure 31

Remove or Disconnect

NOTICE: Cap all open fittings to prevent moisture and other contaminants from entering and damaging the A/C system.

- Discharge and recover refrigerant. Refer to "Air Conditioning Refrigerant Recovery, Recycling and (ACR³) Station Set Up" later in this section.

1. Negative (-) battery cable.
2. Evaporator-to-compressor (compressor inlet) pipe at compressor fitting (one bolt).
3. Compressor-to-condenser (compressor outlet) pipe at compressor fitting (one bolt). Plug openings to keep out dirt and moisture.
4. Upper compressor-to-bracket mounting bolt (Figure 31).

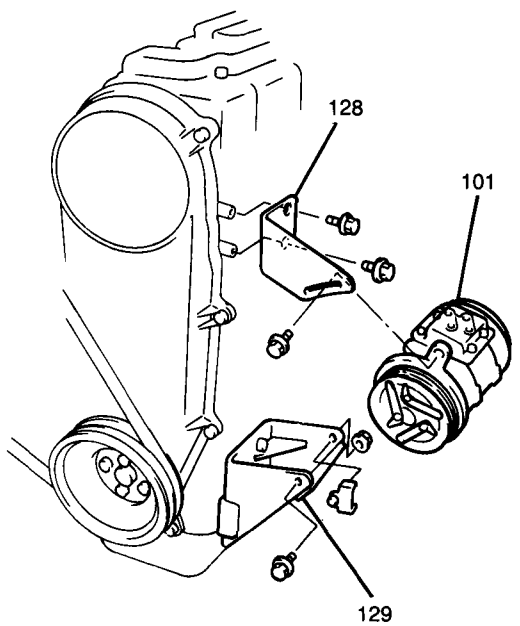

101 COMPRESSOR
128 UPPER MOUNTING BRACKET
129 LOWER MOUNTING BRACKET
NC0114-1B-JT-RS

Figure 31 Compressor Mounting

- Raise and suitably support vehicle. Refer to SECTION 0A.

5. A/C compressor clutch electrical connector; disengage from clamps.
6. Lower compressor-to-bracket mounting bolts, while disengaging compressor drive belt from A/C compressor clutch pulley (Figure 31).
7. Compressor from vehicle.

Install or Connect

1. Compressor to vehicle; secure with lower compressor-to-bracket mounting bolts. Do not tighten fully.
2. Compressor drive belt to A/C compressor clutch pulley.
3. A/C compressor clutch electrical connector. Secure wiring harness with original clamps.
- Lower vehicle.
4. Upper compressor-to-bracket mounting bolt.

Adjust

- Compressor drive belt tension. Refer to "Compressor Drive Belt Inspection and Adjustment" earlier in this section.

Tighten

- Upper compressor-to-bracket mounting bolts to 28 N·m (21 lb.ft.).
- Lower compressor-to-bracket mounting bolts to 45 N·m (33 lb.ft.).

5. Compressor-to-condenser (compressor outlet) pipe at compressor fitting; secure with one bolt.
6. Evaporator-to-compressor (compressor inlet) pipe at compressor fitting; secure with one bolt.

NOTICE: Install new O-rings to compressor fittings. Coat new O-rings with clean refrigerant oil.

Tighten

- Compressor pipe fitting bolts to 25 N·m (18 lb.ft.).

7. Negative (-) battery cable.

Tighten

- Negative (-) battery cable-to-negative (-) battery terminal retainer to 15 N·m (11 lb.ft.).

- Evacuate and charge A/C system. Refer to "Adding Oil, Evacuating and Charging the Refrigeration System" earlier in this section.
- Operate A/C system and check for refrigerant leaks. Refer to "Leak Testing the Refrigerant System" earlier in this section.

Compressor Mounting Brackets

Figure 31

Remove or Disconnect

1. Compressor from mounting brackets. Refer to "Compressor" under "On-Vehicle Service" earlier in this section.
2. Upper and lower compressor mounting bracket bolts and brackets from engine block (Figure 31).

Install or Connect

1. Upper and lower compressor mounting brackets to engine block; secure with bolts.

Tighten

- Lower compressor mounting bracket bolts to 45 N·m (33 lb.ft.).
- Upper compressor mounting bracket bolts to 28 N·m (21 lb.ft.).

2. Compressor to mounting brackets. Refer to "Compressor" under "On-Vehicle Service" earlier in this section.

A/C Compressor Clutch

For procedures for removal of the A/C compressor clutch and compressor unit repair, refer to SECTION 1D.

Evaporator

Figures 32, 33 and 34

Remove or Disconnect

NOTICE: Cap all open fittings to prevent moisture and other contaminants from entering and damaging the A/C system.

- Discharge and recover refrigerant. Refer to "Air Conditioning Refrigerant Recovery, Recycling and (ACR^3) Station Set Up" later in this section.

1. Negative (-) battery cable.
2. Evaporator inlet and outlet pipes at bulkhead by loosening pipe nuts.
3. Evaporator case mounting nut on engine side of bulkhead.

4. One screw and glove box from instrument panel.
- Loosen blower motor housing support (two bolts).
- Loosen evaporator-to-heater connector band; slide band on to heater case (Figure 32).

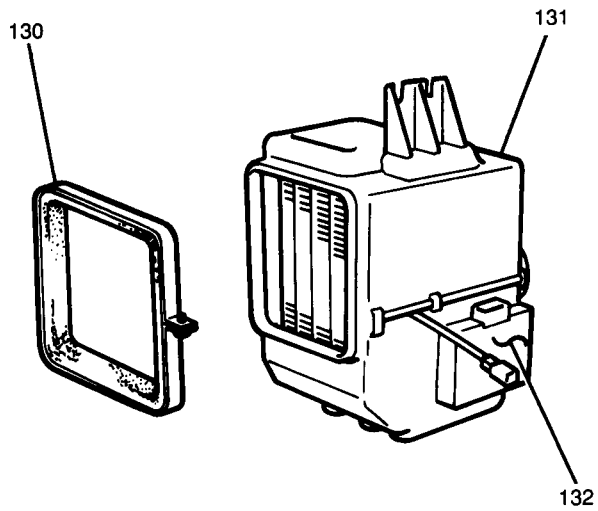

130 EVAPORATOR CASE-TO-HEATER CASE CONNECTOR BAND
131 EVAPORATOR CASE
132 A/C AMPLIFIER
NC1506-1B-JT-RS

Figure 32 Evaporator Case and Heater Case Connector Band

5. Evaporator case drain hose.
6. A/C amplifier and evaporator thermistor electrical connectors.
7. Two evaporator case upper mounting bolts.
8. Evaporator case from vehicle.
- Separate upper and lower case halves by disengaging retaining clips (Figures 32 and 33).

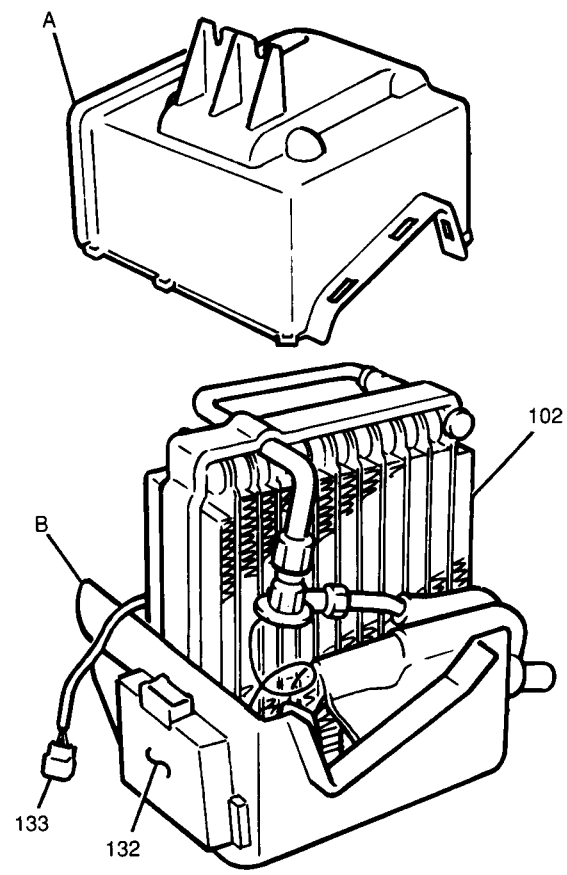

A UPPER EVAPORATOR CASE
B LOWER EVAPORATOR CASE
102 EVAPORATOR
132 A/C AMPLIFIER
133 A/C THERMISTOR ELECTRICAL CONNECTOR
NC0128-1B-JT-RS

Figure 33 Separating Evaporator Case

9. Evaporator pipe retaining clamp from lower case.
10. Evaporator attaching screws and evaporator from lower case.
11. Expansion valve from evaporator by removing two nuts (Figure 34).

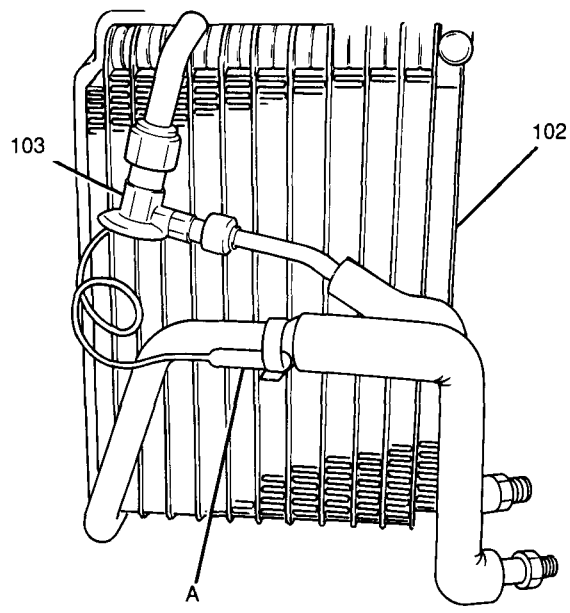

A EXPANSION VALVE REMOTE BULB
102 EVAPORATOR
103 EXPANSION VALVE
NC0129-1B-JT-RS

Figure 34 Evaporator and Expansion Valve

12. Thermistor from evaporator.
13. A/C amplifier from outside of lower case.

Inspect

1. Evaporator fins for blockage. If a blockage is found, use compressed air to clean fins.

   NOTICE: NEVER use water to clean evaporator core.

2. Inlet and outlet fittings for cracks or scratches. Replace if required.
3. Expansion valve operation. Refer to "Expansion Valve" later in this section.
4. Evaporator thermistor operation. Refer to "Evaporator Thermistor" later in this section.

Install or Connect

1. A/C amplifier to outside of lower case.
2. Evaporator thermistor to evaporator.
3. Expansion valve to evaporator; secure with two nuts (Figure 34).

   ### Tighten

   - Larger expansion valve pipe nut to 35 N·m (26 lb.ft.).
   - Smaller expansion valve pipe to to 13 N·m (115 lb.in.).

4. Evaporator attaching screws and evaporator to lower case.
5. Evaporator pipe retaining clamp to lower case.
6. Evaporator case halves; secure with retaining clips.
7. Evaporator case to vehicle; secure with two upper mounting bolts and one nut on the engine side of the bulkhead.

   ### Tighten

   - Evaporator case mounting bolts and nut to 15 N·m (11 lb.ft.).

8. A/C amplifier and evaporator thermistor electrical connectors.
9. Evaporator case drain hose.

10. Evaporator case-to-heater case connector band; slide band on from heater case and tighten (Figure 32).
- Secure blower motor housing support (two bolts, one nut).

Tighten

- Blower motor housing support bolts and nut to 15 N·m (11 lb.ft.).

11. Glove box to instrument panel; secure with one screw.
12. Evaporator inlet and outlet pipes at bulkhead; secure with pipe nuts.

NOTICE: Install new O-rings to evaporator pipe fittings. Coat new O-rings with clean refrigerant oil.

Tighten

- Evaporator inlet pipe nut to 35 N·m (26 lb.ft.).
- Evaporator outlet pipe nut to 45 N·m (33 lb.ft.).

13. Negative (-) battery cable.

Tighten

- Negative (-) battery cable-to-negative (-) battery terminal retainer to 15 N·m (11 lb.ft.).

- Evacuate and charge A/C system. Refer to "Adding Oil, Evacuating and Charging the Refrigeration System" earlier in this section.
- Operate A/C system and check for refrigerant leaks. Refer to "Leak Testing the Refrigerant System" earlier in this section.

Expansion Valve

Figures 32 through 36

Remove or Disconnect

NOTICE: Cap all open fittings to prevent moisture and other contaminants from entering and damaging the A/C system.

- Discharge and recover refrigerant. Refer to "Air Conditioning Refrigerant Recovery, Recycling and (ACR³) Station Set Up" later in this section.

1. Negative (-) battery cable.
2. Evaporator inlet and outlet pipes at bulkhead by loosening pipe nuts.
3. Evaporator case mounting nut on engine side of bulkhead.
4. One screw and glove box from instrument panel.
- Loosen blower motor housing support (two bolts).
- Loosen evaporator-to-heater case connector band; slide band onto heater case (Figure 32).

5. Evaporator case drain hose.
6. A/C amplifier and evaporator thermistor electrical connectors.
7. Two evaporator case upper mounting bolts.
8. Evaporator case from vehicle.
- Separate upper and lower case halves by disengaging retaining clips (Figures 32 and 33).

9. Evaporator pipe retaining clamp from lower case.
10. Evaporator attaching screws and evaporator from lower case.
11. Expansion valve from evaporator by removing two nuts (Figure 34).

Inspect

- Expansion valve operation.

Tool Required:
J 23575-B Manifold Gage Set

A. Connect the expansion valve to a J 23575-B; connect the gage set's charging hose to a R-12 refrigerant drum (Figure 35).

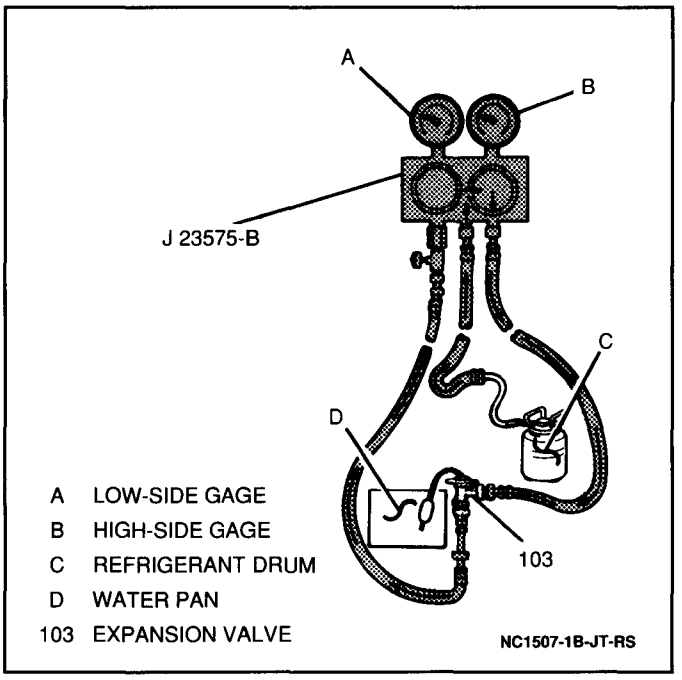

Figure 35 Expansion Valve Operation

B. Soak the valve's remote bulb in water.
C. Close both the high and low-pressure valves.
D. Open the valve to the refrigerant drum.
E. Open the high-pressure valve to approximately 482.65 kPa (70 psi).
F. Read the pressure indicated on the low-pressure gage, and measure the water temperature with a thermometer.
G. The pressure/temperature relationship should fall within the specifications shown in Figure 36. If it does not, the expansion valve should be replaced.

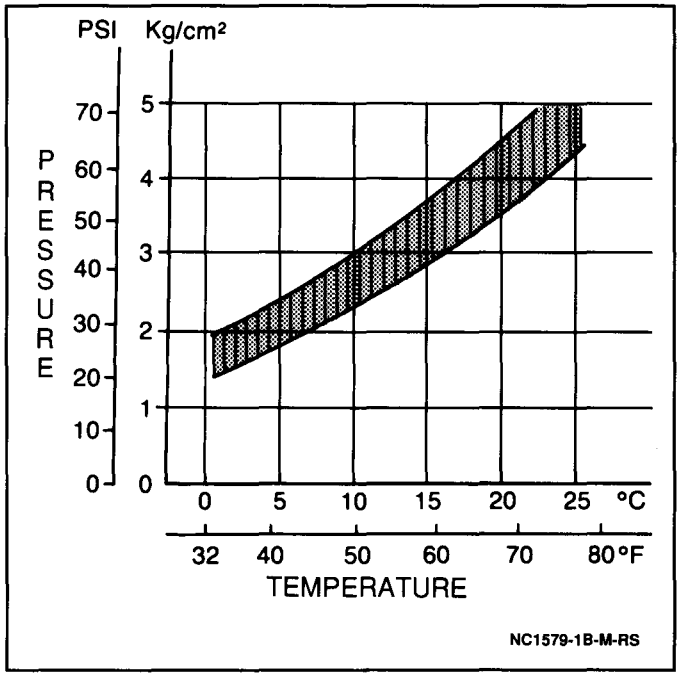

Figure 36 Expansion Valve Pressure/Temperature Relationship Chart

Install or Connect

NOTICE: Install new O-rings to expansion valve fittings. Coat new O-rings with clean refrigerant oil.

1. Expansion valve to evaporator; secure with two nuts (Figure 34).

Tighten

- Larger expansion valve pipe nut to 35 N·m (26 lb.ft.).
- Smaller expansion valve pipe to to 13 N·m (115 lb.in.).

2. Evaporator attaching screws and evaporator to lower case.
3. Evaporator pipe retaining clamp to lower case.
4. Evaporator case halves; secure with retaining clips.
5. Evaporator case to vehicle; secure with two upper mounting bolts and one nut on the engine side of the bulkhead.

Tighten

- Evaporator case mounting bolts and nut to 15 N·m (11 lb.ft.).

6. A/C amplifier and evaporator thermistor electrical connectors.
7. Evaporator case drain hose.
8. Evaporator case-to-heater case connector band; slide band on from heater case and tighten (Figure 32).

- Secure blower motor housing support (two bolts, one nut).

Tighten

- Blower motor housing support bolts and nut to 15 N·m (11 lb.ft.).

9. Glove box to instrument panel; secure with one screw.
10. Evaporator inlet and outlet pipes at bulkhead; secure with pipe nuts.

NOTICE: Install new O-rings to evaporator pipe fittings. Coat new O-rings with clean refrigerant oil.

Tighten

- Evaporator inlet pipe nut to 35 N·m (26 lb.ft.).
- Evaporator outlet pipe nut to 45 N·m (33 lb.ft.).

11. Negative (-) battery cable.

Tighten

- Negative (-) battery cable-to-negative (-) battery terminal retainer to 15 N·m (11 lb.ft.).

- Evacuate and charge A/C system. Refer to "Adding Oil, Evacuating and Charging the Refrigeration System" earlier in this section.
- Operate A/C system and check for refrigerant leaks. Refer to "Leak Testing the Refrigerant System" earlier in this section.

Evaporator Thermistor

Figures 32, 33, 34 and 37

Remove or Disconnect

NOTICE: Cap all open fittings to prevent moisture and other contaminants from entering and damaging the A/C system.

- Discharge and recover refrigerant. Refer to "Air Conditioning Refrigerant Recovery, Recycling and (ACR³) Station Set Up" later in this section.

1. Negative (-) battery cable.
2. Evaporator inlet and outlet pipes at bulkhead by loosening pipe nuts.
3. Evaporator case mounting nut on engine side of bulkhead.
4. One screw and glove box from instrument panel.

- Loosen blower motor housing support (two bolts).
- Loosen evaporator-to-heater case connector band; slide band onto heater case (Figure 32).

5. Evaporator case drain hose.
6. A/C amplifier and evaporator thermistor electrical connectors.
7. Two evaporator case upper mounting bolts.
8. Evaporator case from vehicle.

- Separate upper and lower case halves by disengaging retaining clips (Figures 32 and 33).

9. Evaporator pipe retaining clamp from lower case.

10. Evaporator attaching screws and evaporator from lower case.
11. Expansion valve from evaporator by removing two nuts (Figure 34).
12. Evaporator thermistor from evaporator.

Inspect

- Evaporator thermistor operation.

  Tool Required:
  J 39200 Digital Multimeter

  A. Using a J 39200, measure the resistance of the thermistor.
  B. Using a thermometer, measure the ambient air temperature.
  C. Refer to the thermistor resistance/temperature relationship chart to make sure thermistor resistance falls within specification for a given temperature. If the thermistor does not perform to specification, it should be replaced (Figure 37).

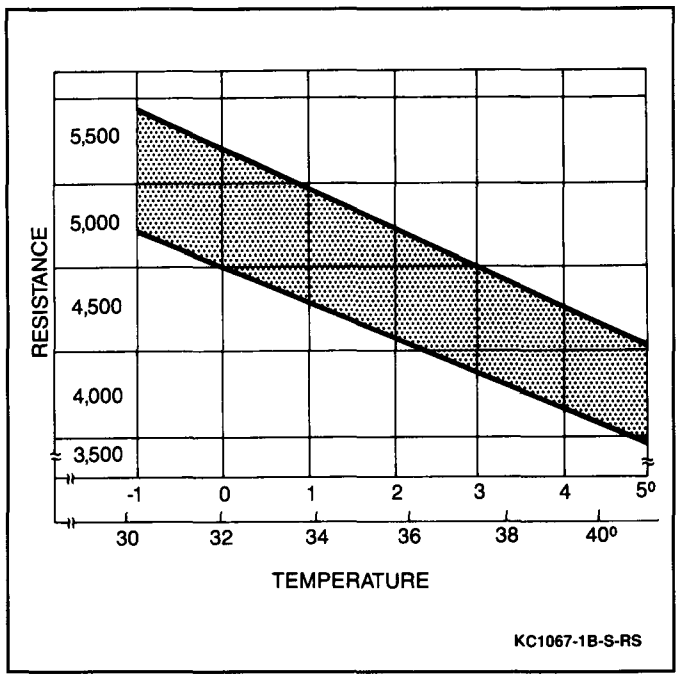

Figure 37 Thermistor Resistance/Temperature Relationship

Install or Connect

1. Expansion valve to evaporator; secure with two nuts (Figure 34).

   Tighten

   - Larger expansion valve pipe nut to 35 N·m (26 lb.ft.).
   - Smaller expansion valve pipe to to 13 N·m (115 lb.in.).
2. Evaporator attaching screws and evaporator to lower case.
3. Evaporator pipe retaining clamp to lower case.
4. Evaporator case halves; secure with retaining clips.
5. Evaporator case to vehicle; secure with two upper mounting bolts and one nut on the engine side of the bulkhead.

   Tighten

   - Evaporator case mounting bolts and nut to 15 N·m (11 lb.ft.).
6. A/C amplifier and evaporator thermistor electrical connectors.
7. Evaporator case drain hose.
8. Evaporator case-to-heater case connector band; slide band on from heater case and tighten (Figure 32).
   - Secure blower motor housing support (two bolts, one nut).

   Tighten

   - Blower motor housing support bolts and nut to 15 N·m (11 lb.ft.).
9. Glove box to instrument panel; secure with one screw.
10. Evaporator inlet and outlet pipes at bulkhead; secure with pipe nuts.

    NOTICE: Install new O-rings to evaporator pipe fittings. Coat new O-rings with clean refrigerant oil.

    Tighten

    - Evaporator inlet pipe nut to 35 N·m (26 lb.ft.).
    - Evaporator outlet pipe nut to 45 N·m (33 lb.ft.).
11. Negative (-) battery cable.

    Tighten

    - Negative (-) battery cable-to-negative (-) battery terminal retainer to 15 N·m (11 lb.ft.).

- Evacuate and charge A/C system. Refer to "Adding Oil, Evacuating and Charging the Refrigeration System" earlier in this section.
- Operate A/C system and check for refrigerant leaks. Refer to "Leak Testing the Refrigerant System" earlier in this section.

A/C Amplifier

Figures 32 and 33

Remove or Disconnect

1. Negative (-) battery cable.
2. One screw and glove box from instrument panel.
3. A/C amplifier electrical connector.
4. A/C amplifier from evaporator case. Slide amplifier up and out of mounting slots.

Install or Connect

1. A/C amplifier to evaporator case. Slide down into mounting slots.
2. A/C amplifier electrical connector.
3. Glove box to instrument panel; secure with one screw.
4. Negative (-) battery cable.

Tighten

- Negative (-) battery cable-to-negative (-) battery terminal retainer to 15 N·m (11 lb.ft.).

A/C Engine Coolant Temperature (ECT) Switch

Figures 27 and 38

The A/C ECT switch is located on the right side of the intake manifold, near the thermostat housing. The single connecting wire is yellow with a blue stripe.

Remove or Disconnect

1. Negative (-) battery cable.
2. A/C ECT switch electrical connector.
3. A/C ECT switch from intake manifold.

- Plug threaded hole to keep coolant from escaping.

Inspect

Tool Required:
J 39200 Digital Multimeter

- Place the A/C ECT switch in a mixture of ethylene glycol and water and heat the solution on a burner.
- Switch for continuity using a J 39200. The switch should be closed with continuity present until the solution has been heated to 113°C (235°F). At or above this temperature, the switch should open and no continuity should be present. If the switch is not within specification, it should be replaced (Figure 38).

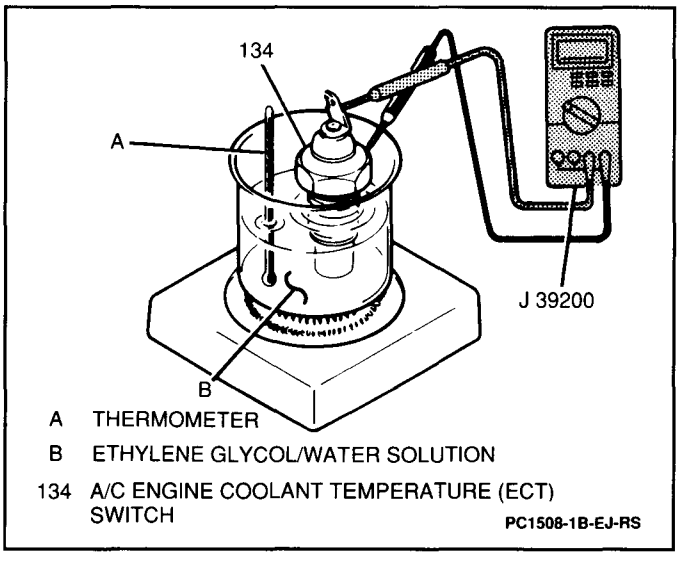

Figure 38 A/C Engine Coolant Temperature (ECT) Switch Inspection

Install or Connect

- Unplug threaded hole and install A/C ECT switch to intake manifold.

1. Switch electrical connector.
2. Negative (-) battery cable.

Tighten

- Negative (-) battery cable-to-negative (-) battery terminal retainer to 15 N·m (11 lb.ft.).

- Refill any coolant which may have escaped when switch was removed. Refer to SECTION 6B.

Dual Pressure Switch

Figure 26

Inspect

Tool Required:
J 39200 Digital Multimeter

- Dual pressure switch on the vehicle at normal temperature (approximately 25°C, 77°F). Make sure that the A/C system has a proper refrigerant charge and that the A/C compressor is in operation.
- Using a J 39200, check for continuity. The switch should show no continuity when the refrigerant pressure is below 207 kPa (30 psi), or when the pressure is above 2641 kPa (384 psi). Between those two pressure extremes, the switch should show continuity.
- If the dual pressure switch fails to perform to specification, it must be replaced.

Remove or Disconnect

- Discharge and recover refrigerant. Refer to "Air Conditioning Refrigerant Recovery, Recycling and (ACR³) Station Setup" earlier in this section.

1. Negative (-) battery cable.
2. Dual pressure switch electrical connector.
3. Dual pressure switch by unscrewing from the top of the receiver/dryer.

Install or Connect

1. Dual pressure switch to top of receiver/dryer.

   Tighten

   - Dual pressure switch to 18 N·m (13 lb.ft.).

2. Dual pressure switch electrical connector.
3. Negative (-) battery cable.

   Tighten

   - Negative (-) battery cable-to-negative (-) battery terminal retainer to 15 N·m (11 lb.ft.).

- Evacuate and charge A/C system. Refer to "Adding Oil, Evacuating and Charging the Refrigeration System" earlier in this section.
- Operate A/C system and check for refrigerant leaks. Refer to "Leak Testing the Refrigerant System" earlier in this section.

Air Ducts and Deflector Outlets

Service procedures for the air ducts and deflector outlets can be found in SECTION 1A.

Heater Hoses

The heater hoses run from the center of the bulkhead, where they connect to the heater core; and to the right side of the intake manifold and engine block.

Remove or Disconnect

- Drain engine cooling system. Refer to SECTION 6B.
1. Heater core outlet hose by releasing hose clamps at the bulkhead and at the intake manifold; remove hose from vehicle.
2. Heater core inlet hose by releasing hose clamps at the bulkhead and engine block pipe fitting.

Install or Connect

1. Heater core inlet hose to bulkhead and engine block pipe fitting; secure with hose clamps.
2. Heater core outlet hose to bulkhead and intake manifold; secure with hose clamps.
- Refill engine cooling system. Refer to SECTION 6B.

Refrigerant Pipes and Hoses

Compressor-to-Condenser (Compressor Discharge) Pipe

Figure 26

Remove or Disconnect

NOTICE: Cap all open fittings to prevent moisture and other contaminants from entering and damaging the A/C system.

- Discharge and recover refrigerant. Refer to "Air Conditioning Refrigerant Recovery, Recycling and (ACR³) Station Setup" earlier in this section.
1. Front grille and grille net. Refer to SECTION 10-5.
2. Compressor discharge pipe at compressor fitting (one bolt).
3. Pipe at condenser inlet fitting (one bolt).
4. Pipe from radiator-mounted guide bracket and from vehicle.

Install or Connect

NOTICE: Install new O-rings to refrigerant pipe fittings. Coat new O-rings with clean refrigerant oil.

1. Pipe to vehicle; secure at radiator-mounted guide bracket.
2. Pipe at condenser inlet fitting (one bolt).
3. Compressor discharge pipe at compressor fitting (one bolt).

Tighten

- Condenser inlet pipe fitting bolt to 25 N·m (18 lb.ft.).
- Compressor discharge pipe fitting bolt to 25 N·m (18 lb.ft.).

4. Front grille and grille net. Refer to SECTION 10-5.
- Evacuate and charge A/C system. Refer to "Adding Oil, Evacuating and Charging the Refrigeration System" earlier in this section.
- Operate A/C system and check for refrigerant leaks. Refer to "Leak Testing the Refrigerant System" earlier in this section.

Condenser-to-Receiver/Dryer (Receiver/Dryer Inlet) Pipe

Figure 26

Remove or Disconnect

NOTICE: Cap all open fittings to prevent moisture and other contaminants from entering and damaging the A/C system.

- Discharge and recover refrigerant. Refer to "Air Conditioning Refrigerant Recovery, Recycling and (ACR³) Station Setup" earlier in this section.
1. Front grille and grille net. Refer to SECTION 10-5.
2. Condenser-to-receiver/dryer (receiver/dryer inlet) pipe at receiver/dryer fitting (one bolt).
3. Pipe at condenser fitting in front of radiator (one nut).
4. Pipe from radiator-mounted guide bracket and from vehicle.

Install or Connect

NOTICE: Install new O-rings to refrigerant pipe fittings. Coat new O-rings with clean refrigerant oil.

1. Pipe to vehicle; secure at radiator-mounted guide bracket.
2. Pipe at condenser fitting in front of the radiator (one pipe nut).
3. Condenser-to-receiver/dryer (receiver/dryer inlet) pipe at receiver/dryer fitting (one bolt).

Tighten

- Receiver/dryer pipe fitting bolt to 35 N·m (26 lb.ft.).
- Condenser pipe nut to 35 N·m (26 lb.ft.).

4. Front grille and grille net. Refer to SECTION 10-5.
- Evacuate and charge A/C system. Refer to "Adding Oil, Evacuating and Charging the Refrigeration System" earlier in this section.
- Operate A/C system and check for refrigerant leaks. Refer to "Leak Testing the Refrigerant System" earlier in this section.

Evaporator-to-Compressor (Compressor Suction) Pipe

Figure 26

Remove or Disconnect

NOTICE: Cap all open fittings to prevent moisture and other contaminants from entering and damaging the A/C system.

- Discharge and recover refrigerant. Refer to "Air Conditioning Refrigerant Recovery, Recycling and (ACR³) Station Setup" earlier in this section.
1. Evaporative emissions (EVAP) canister:
   A. Two hoses from top of EVAP canister.
   B. Two bolts from EVAP canister mounting bracket and EVAP canister from vehicle.
2. Evaporator-to-compressor (compressor suction) pipe at compressor fitting (one bolt).
3. Pipe at evaporator outlet bulkhead fitting (one pipe nut).

4. Pipe from two radiator-mounted guide brackets and pipe from vehicle.

Install or Connect

NOTICE: Install new O-rings to refrigerant pipe fittings. Coat new O-rings with clean refrigerant oil.

1. Evaporator-to-compressor (compressor suction) pipe to vehicle; secure at radiator-mounted guide brackets.
2. Pipe at evaporator outlet bulkhead fitting (one pipe nut).
3. Pipe at compressor fitting (one bolt).

Tighten

- Compressor pipe fitting bolt to 25 N·m (18 lb.ft.).
- Evaporator outlet pipe nut to 45 N·m (33 lb.ft.).

4. EVAP canister to vehicle; secure with two mounting bracket bolts.

Tighten

- EVAP canister mounting bracket bolts to 20 N·m (15 lb.ft.).

5. Two hoses to top of EVAP canister.

- Evacuate and charge A/C system. Refer to "Adding Oil, Evacuating and Charging the Refrigeration System" earlier in this section.
- Operate A/C system and check for refrigerant leaks. Refer to "Leak Testing the Refrigerant System" earlier in this section.

Receiver/Dryer-to-Evaporator (Evaporator Inlet) Pipe

Figure 26

Remove or Disconnect

NOTICE: Cap all open fittings to prevent moisture and other contaminants from entering and damaging the A/C system.

- Discharge and recover refrigerant. Refer to "Air Conditioning Refrigerant Recovery, Recycling and (ACR³) Station Setup" earlier in this section.

1. Negative (-) battery cable.
2. Dual pressure switch electrical connector.
3. Dual pressure switch from top of receiver/dryer.
4. Evaporative emissions (EVAP) canister:
   A. Two hoses from top of EVAP canister.
   B. Two bolts from EVAP canister mounting bracket and canister from vehicle.
5. Receiver/dryer-to-evaporator (evaporator inlet) pipe at evaporator inlet bulkhead fitting (one nut).
6. Pipe at receiver/dryer fitting (one bolt).

Install or Connect

NOTICE: Install new O-rings to refrigerant pipe fittings. Coat new O-rings with clean refrigerant oil.

1. Receiver/dryer-to-evaporator (evaporator inlet) pipe at evaporator inlet bulkhead fitting (one nut).
2. Pipe at receiver/dryer fitting (one bolt).

Tighten

- Evaporator inlet pipe nut to 35 N·m (26 lb.ft.).
- Receiver/dryer pipe fitting bolt to 35 N·m (26 lb.ft.).

3. EVAP canister; secure with two mounting bracket bolts.

Tighten

- EVAP canister mounting bracket bolts to 20 N·m (15 lb.ft.).

4. Two hoses to top of EVAP canister.
5. Dual pressure switch to top of receiver/dryer.

Tighten

- Dual pressure switch to 18 N·m (13 lb.ft.).

6. Dual pressure switch electrical connector.
7. Negative (-) battery cable.

Tighten

- Negative (-) battery cable-to-negative (-) battery terminal retainer to 15 N·m (11 lb.ft.).

- Evacuate and charge A/C system. Refer to "Adding Oil, Evacuating and Charging the Refrigeration System" earlier in this section.
- Operate A/C system and check for refrigerant leaks. Refer to "Leak Testing the Refrigerant System" earlier in this section.

SPECIFICATIONS

FASTENER TORQUES

Upper Compressor Mounting Bolts	28 N·m (21 lb.ft.)
Lower Compressor Mounting Bolts	45 N·m (33 lb.ft.)
Filter Drier Core Bolts	20 N·m (15 lb.ft.)
Compressor Discharge Pipe Fitting Bolt	25 N·m (18 lb.ft.)
Condenser Fan Mounting Bolts	15 N·m (11 lb.ft.)
Condenser Mounting Bolts	20 N·m (15 lb.ft.)
Condenser Inlet Pipe Fitting Bolt	25 N·m (18 lb.ft.)
Condenser Outlet Pipe Fitting Nut	35 N·m (26 lb.ft.)
Front End Upper Panel Bolts	20 N·m (15 lb.ft.)
Radiator Core Center Brace Bolts	20 N·m (15 lb.ft.)
Horn Bolt	15 N·m (11 lb.ft.)
Receiver/Dryer Pipe Fitting Bolts	35 N·m (26 lb.ft.)
Compressor Pipe Fitting Bolts	25 N·m (18 lb.ft.)
Lower Compressor-to-Bracket Mounting Bolts	45 N·m (33 lb.ft.)
Upper Compressor-to-Bracket Mounting Bolts	28 N·m (21 lb.ft.)
Evaporator Case Mounting Bolts and Nut	15 N·m (11 lb.ft.)
Blower Motor Housing Support Bolts and Nut	15 N·m (11 lb.ft.)
Evaporator Inlet Pipe Nut	35 N·m (26 lb.ft.)
Evaporator Outlet Pipe Nut	45 N·m (33 lb.ft.)
Expansion Valve Pipe Nut (Larger)	35 N·m (26 lb.ft.)
Expansion Valve Pipe Nut (Smaller)	13 N·m (115 lb.in.)
Dual Pressure Switch	18 N·m (13 lb.ft.)
Evaporative Emissions (EVAP) Canister Mounting Bracket Bolts	20 N·m (15 lb.ft.)
Negative (-) Battery Cable-to-Negative (-) Battery Terminal Retainer	15 N·m (11 lb.ft.)

REFRIGERATION SYSTEM CAPACITIES

Refrigerant-12 System Capacity	600 g (1.32 lbs.)
525 Viscosity Refrigerant Oil Capacity	80 ml (2.7 fl.oz.)

SERVICE PARTS INFORMATION

Component Name Used in Section 1B	Reference Name in Service Parts Catalog	Group Number
Compressor	Compressor	9.170
A/C Compressor Clutch	Clutch, Compressor Drive	9.186
Evaporator	Evaporator Asm	9.210
Condenser	Condenser	9.190
Condenser Fan	Fan Asm, A/C Condenser	9.190
Receiver/Dryer	Dryer, A/C Condenser Receiver	9.125
Compressor Drive Belt	V Belt, A/C Compressor	1.066
Compressor Suction Pipe	Hose, Compressor Suction	9.225
Compressor-to-Evaporator Pipe	Hose, Compressor Delivery	9.225
Condenser-to-Receiver/Dryer Pipe	Pipe, A/C Condenser Receiver Inlet	9.220
Receiver/Dryer-to-Evaporator Pipe	Pipe, A/C Evaporator to Receiver/Dryer	9.220
A/C Amplifier	Amplifier, A/C	9.275
A/C Engine Coolant Temperature (ECT) Switch	Switch, A/C Water Temperature	9.275
Evaporator Thermistor	Thermistor, Evaporator	9.275
Dual Pressure Switch	Switch, A/C Amplifier	9.275
Expansion Valve	Valve, A/C Expansion	9.213
Heater Core Outlet Hose	Hose, Heater Outlet	8.846
Heater Core Inlet Hose	Hose, Heater Inlet	8.846

SPECIAL TOOLS

1
J 23575-B

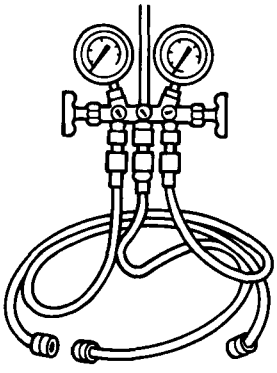

3
J 36790

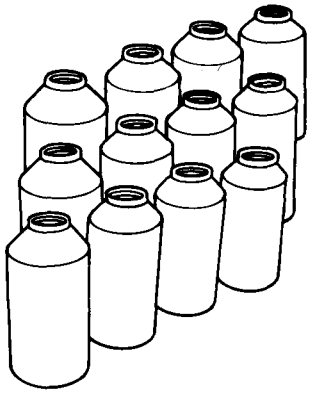

2
J 34119

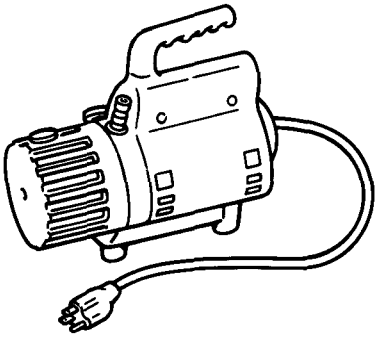

4
J 39400

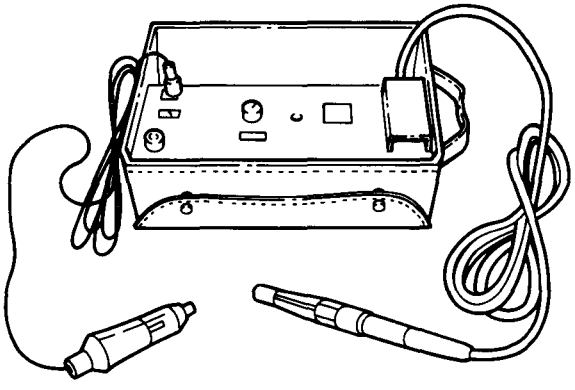

5
J 36846

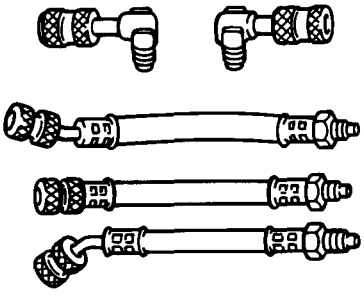

1 MANIFOLD GAGE SET
2 VACUUM PUMP
3 FLUORESCENT LEAK DETECTION ADDITIVE
4 ELECTRONIC LEAK DETECTOR
5 HOSE ADAPTER KIT

PC1111-1B-M-RS

6
J 23500-01

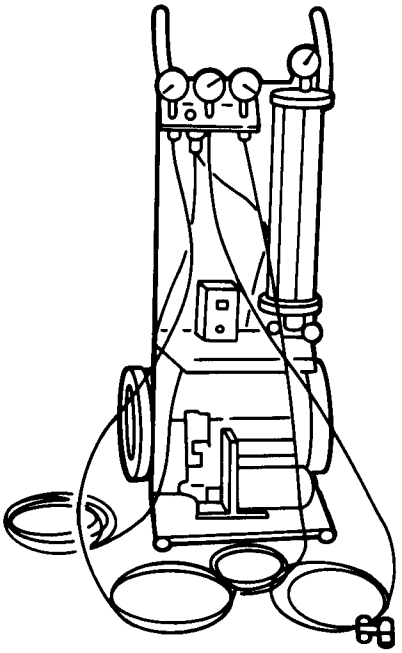

8
J 38100-10

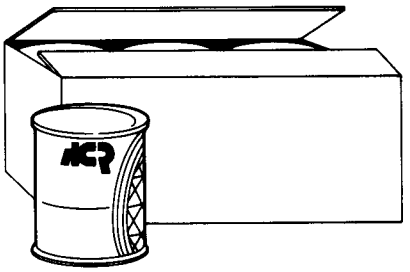

7
J 38100-B OR C

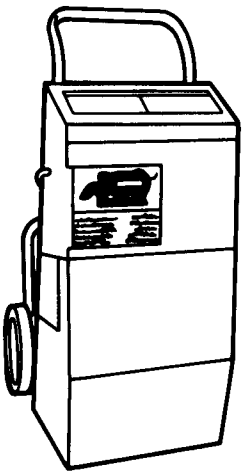

9
J 39200

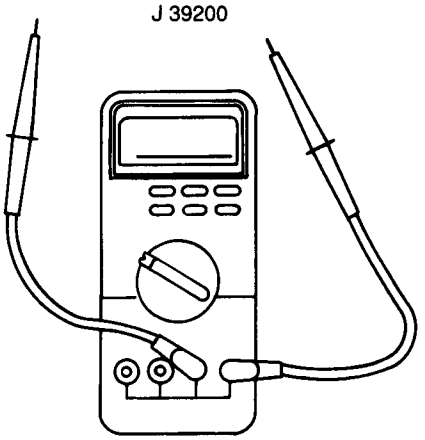

6 REFRIGERANT CHARGING STATION
7 AIR CONDITIONING REFRIGERANT RECOVERY AND RECYCLING STATION
8 FILTER DRIER CORE
9 DIGITAL MULTIMETER

PC1112-1B-M-RS

SECTION 1D

AIR CONDITIONING COMPRESSOR SERVICE

NOTICE: When fasteners are removed, always reinstall them at the same location from which they were removed. If a fastener needs to be replaced, use the correct part number fastener for that application. If the correct part number is not available, a fastener of equal size and strength (or stronger) may be used. Fasteners that are not reused, and those requiring thread-locking compound, will be called out. The correct torque values must be used when installing fasteners that require them. If the above procedures are not followed, parts or system damage could result.

CONTENTS

General Description 1D-1
Diagnosis 1D-1
Service Procedures 1D-3
Minor Repair Procedures 1D-3
A/C Compressor Clutch 1D-3
Major Repair Procedures 1D-7
Compressor Overhaul 1D-7
Compressor Leak Test 1D-14
Specifications 1D-15
Compressor Specifications 1D-15
Fastener Torques 1D-15
Service Parts Information 1D-15
Special Tools 1D-16

GENERAL DESCRIPTION

It is very important when servicing the compressor to keep dirt and other foreign material from getting in or on the compressor parts and system. Clean tools and a clean work area are essential for proper service. The compressor and its parts must be kept clean at all times and any parts which are to be reassembled should be cleaned with Trichloroethane, naphtha, kerosene or an equivalent solvent and air dried. Use only lint-free cloths to wipe parts.

The compressor's function is to pump refrigerant and refrigerant oil through the A/C system, and to compress high-temperature gaseous refrigerant into high-temperature/high-pressure gaseous refrigerant. It is the heart of the A/C system and is essentially (with the exception of the condenser fan) its only moving part. The compressor used in this vehicle is a cycling, ten piston swash plate-type, with a total piston displacement of 82 cm^3 (5-$inches^3$).

The operations described here are based on bench overhaul with the compressor removed from the car. They have been prepared in order of accessibility of the components. When the compressor is removed from the vehicle for servicing, the oil remaining in the compressor should be drained and discarded and new refrigerant oil added when the overhaul is completed.

All repairs and procedures for the compressor must be performed after the A/C system refrigerant has been discharged and recovered, and the compressor has been removed from the vehicle. Refer to SECTION 1B for compressor removal procedures.

DIAGNOSIS

Compressor malfunction will generally appear in one of four ways: noise, seizure, refrigerant leakage or low discharge pressure. Resonant compressor noises are not cause for alarm; however, irregular noise or rattles may indicate broken parts or excessive wear. To check for seizure, de-energize the A/C compressor clutch and check to see if the drive plate can be rotated. If rotation is impossible, the compressor is seized. Compressor gas leaks are very often caused by a defective or worn-out shaft seal. A small amount of compressor oil leakage from the shaft seal is normal. Only when a large leak is detected should the shaft seal be replaced. Oil leakage can at times be detected visually, while gas leak checking will require a gas leak detector. Low discharge pressure may be due to a faulty internal seal or a restriction in the compressor, or leakage of refrigerant somewhere else in the system. Refer to the compressor diagnosis chart for further compressor diagnostic procedures (Figure 1).

CONDITION	POSSIBLE CAUSES	CORRECTION
NOISE FROM COMPRESSOR	DEFECTIVE PISTON/SHOE	REPLACE
	DEFECTIVE BEARING	REPLACE
	DEFECTIVE CYLINDER AND/OR SHAFT	REPLACE
NOISE FROM COMPRESSOR CLUTCH	DEFECTIVE BEARING	REPLACE
	DEFECTIVE CLUTCH FACE	REPLACE
INSUFFICIENT COOLING	DEFECTIVE GASKET	REPLACE
	DEFECTIVE REED VALVE	REPLACE
NOT ROTATING	LOCKED BY DEFECTIVE PISTON/SHOE, BEARING, CYLINDER AND/OR SHAFT, OR REED VALVE	REPLACE
	SEIZED COMPRESSOR CLUTCH	REPLACE OR REPAIR
	ROTATING PARTS SEIZED BY INSUFFICIENT OIL AMOUNT	REPLACE OR REPAIR
OIL AND/OR GAS LEAKAGE	DEFECTIVE SEAL	REPLACE
	DEFECTIVE O-RING	REPLACE

NC1110-1D-JT-RS

Figure 1 Compressor Diagnosis Chart

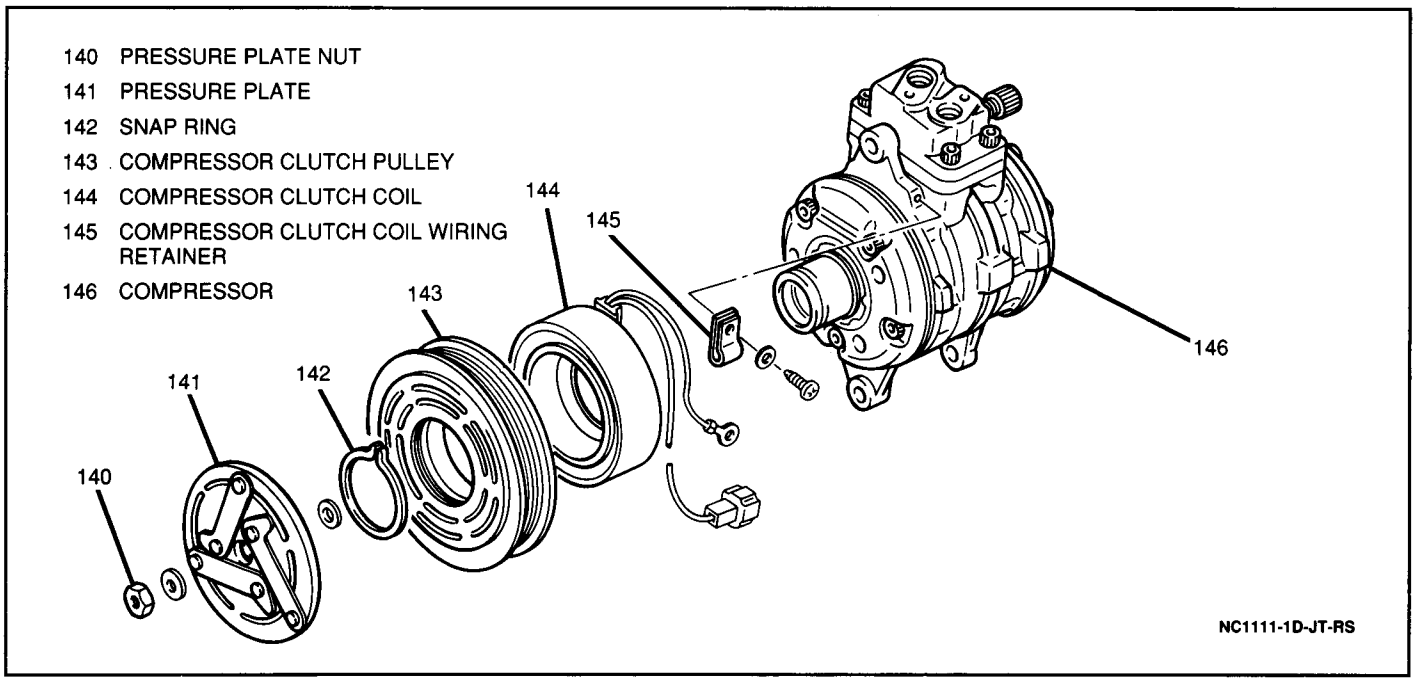

Figure 2 A/C Compressor Clutch Assembly

SERVICE PROCEDURES

MINOR REPAIR PROCEDURES

A/C Compressor Clutch

Figures 2 through 7

Remove or Disconnect

Tool Required:
J 34878 Pressure Plate Remover

1. Compressor assembly from vehicle. Refer to SECTION 1B.
2. Pressure plate nut and washer from compressor drive shaft (Figure 3).

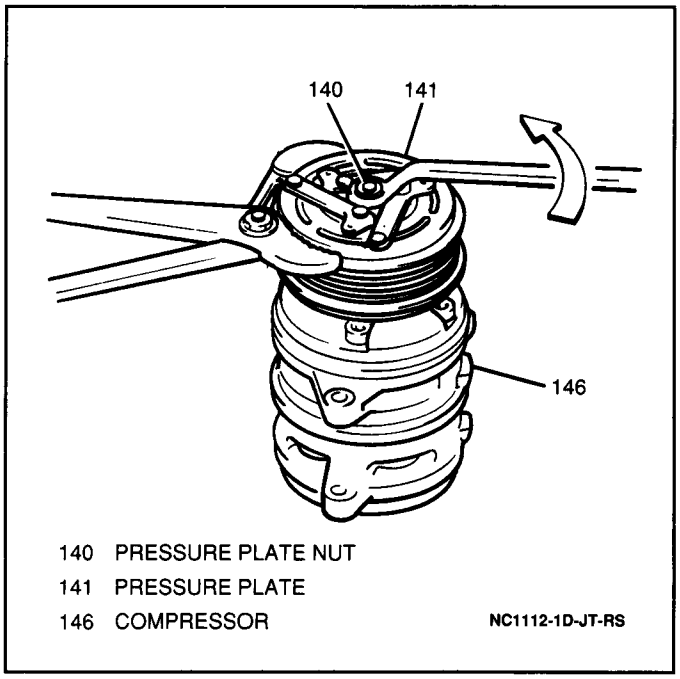

Figure 3 Removing Pressure Plate Nut

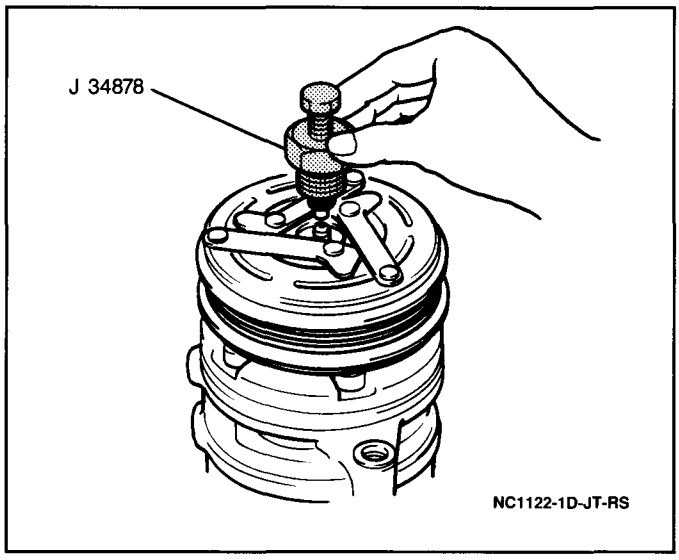

Figure 4 Installing J 34878

3. Pressure plate from compressor drive shaft, using a J 34878 (Figure 4).
4. Snap ring and shim, using the appropriate snap ring pliers (Figure 5).

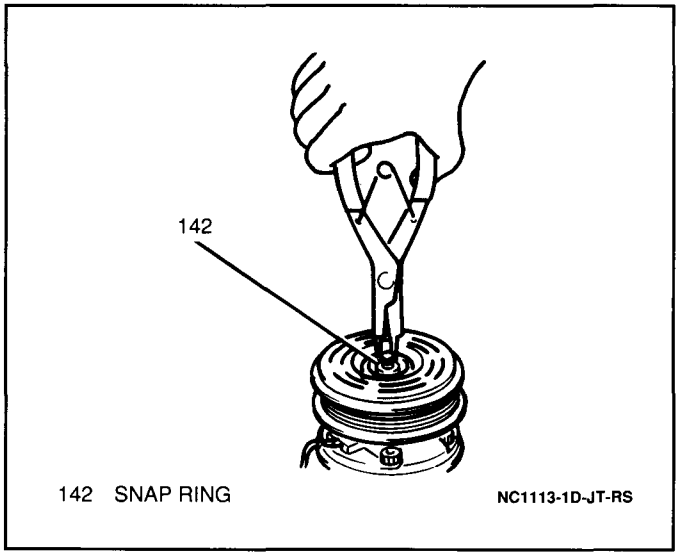

Figure 5 Removing Snap Ring

5. A/C compressor clutch pulley from compressor. Tap off with plastic hammer if necessary.

   NOTICE: Be careful not to damage pulley when tapping it off.
6. Clutch coil wiring retainer from compressor housing (one screw).
7. Clutch coil from compressor.

Inspect

Tool Required:
J 39200 Digital Multimeter

- Pressure plate for wear and scoring. Replace if necessary.
- A/C compressor clutch pulley for wear and scoring. Replace if necessary.
- Clutch coil for resistance using a J 39200. Replace if not within specification (Figure 6).
  - Standard resistance: 3.0 to 3.4 ohms.

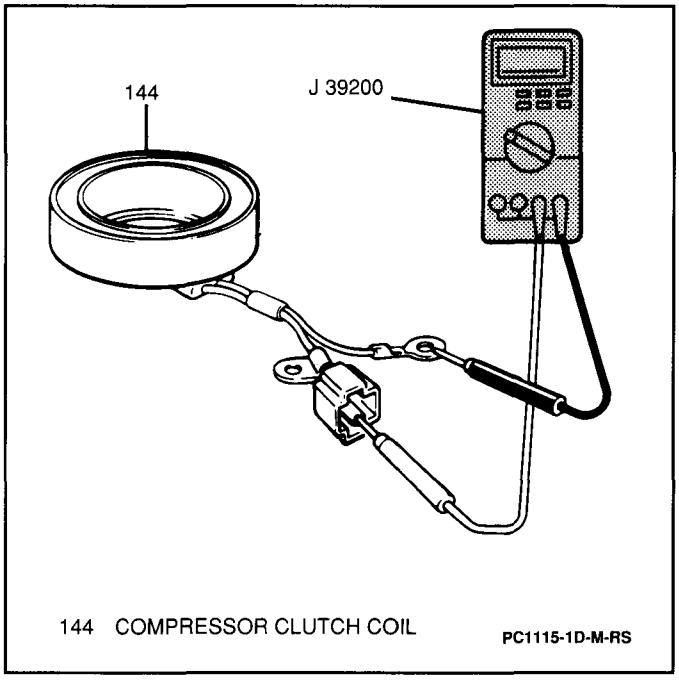

Figure 6 Inspecting A/C Compressor Clutch Coil Resistance

Install or Connect

1. Clutch coil to compressor.
2. Clutch coil wiring retainer to compressor housing; secure with one screw.
3. A/C compressor clutch pulley to compressor; secure with snap ring and shim.
4. Pressure plate to compressor drive shaft.

Measure

- Clearance between clutch pulley and pressure plate (Figure 7).
  - Standard clearance should be 0.4 to 0.7 mm (0.016 to 0.028-inch).

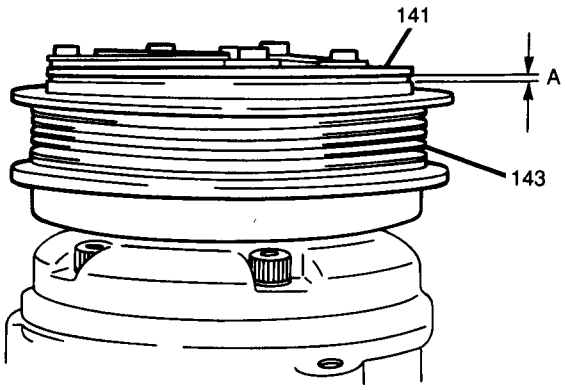

A 0.4-0.7 mm (0.016-0.028")
141 PRESSURE PLATE
143 COMPRESSOR CLUTCH PULLEY NC1116-1D-JT-RS

Figure 7 Measuring Pressure Plate Clearance

5. Pressure plate washer and nut to compressor drive shaft.

Tighten

- Pressure plate nut to 17 N·m (13 lb.ft.).

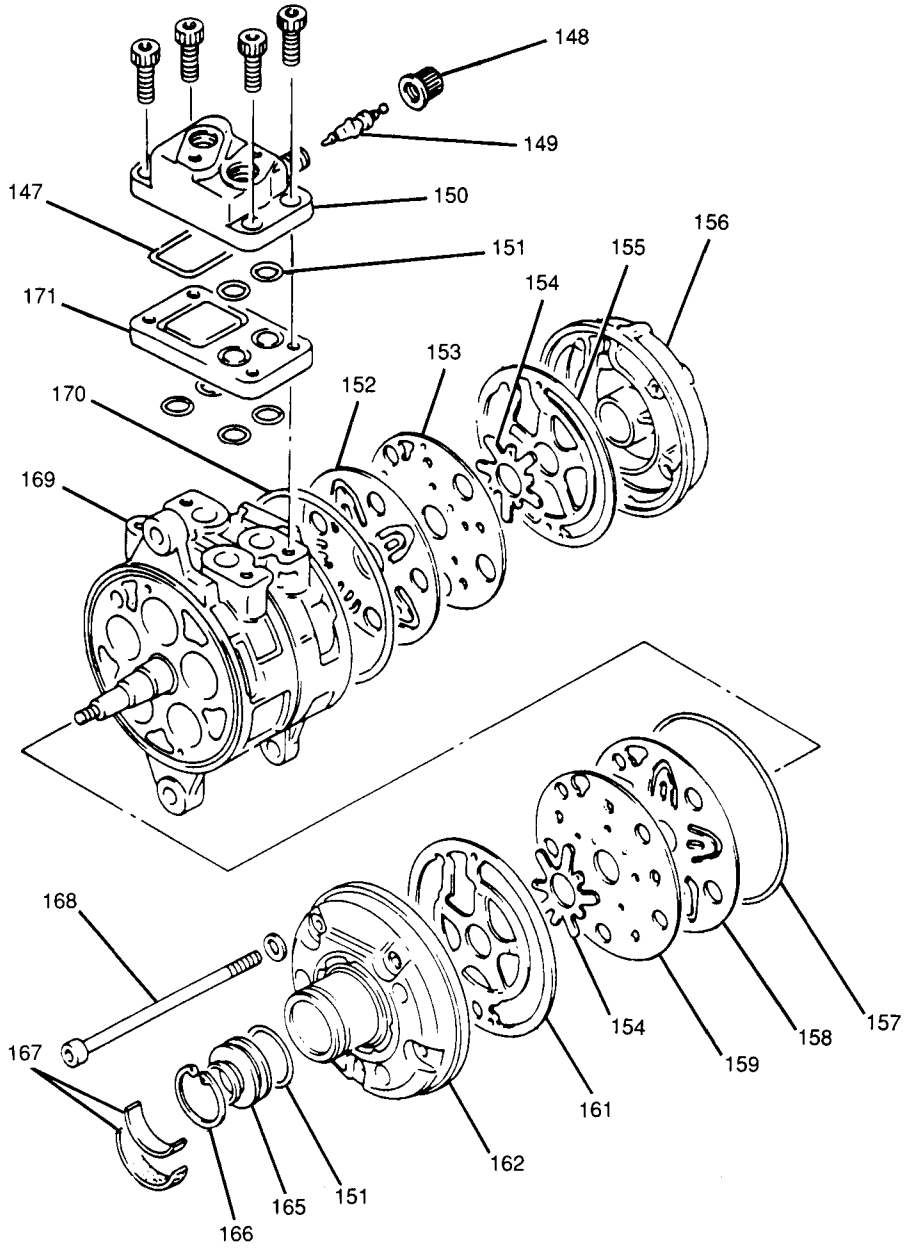

147 DIFFUSER SEAL
148 SERVICE VALVE CAP
149 SERVICE VALVE
150 JOINT SERVICE CONNECTOR
151 O-RING
152 SUCTION VALVE PLATE
153 REAR VALVE PLATE
154 REED VALVE
155 REAR GASKET
156 REAR COMPRESSOR HOUSING
157 FRONT COMPRESSOR SEAL
158 SUCTION VALVE PLATE
159 FRONT VALVE PLATE
161 FRONT GASKET
162 FRONT COMPRESSOR HOUSING
165 COMPRESSOR SHAFT SEAL
166 SNAP RING
167 OIL FELT SEAL AND RETAINER
168 COMPRESSOR THROUGH BOLT
169 COMPRESSOR CYLINDER
170 REAR COMPRESSOR SEAL
171 DIFFUSER

PC1117-1D-M-RS

Figure 8 Compressor Assembly

MAJOR REPAIR PROCEDURES

Compressor Overhaul

Figures 8 through 31

Remove or Disconnect

Tools Required:
J 33942-B Seal Seat Remover

1. A/C compressor clutch. Refer to "A/C Compressor Clutch" earlier in this section.
2. Oil felt seal and retainer from shaft. Pry off with screwdriver (Figure 9).

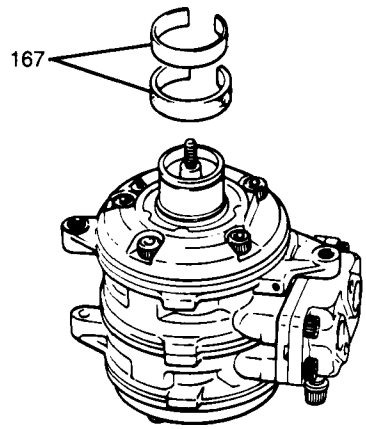

167 OIL FELT SEAL AND RETAINER NC0160-1D-JT-RS

Figure 9 Oil Felt Seal and Retainer

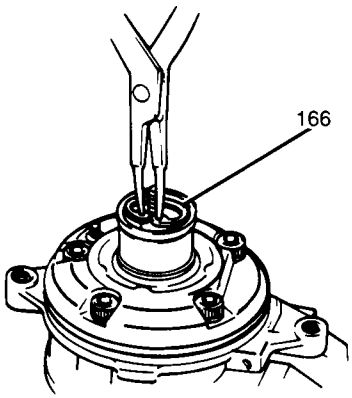

166 SNAP RING NC1124-1D-JT-RS

Figure 10 Removing Snap Ring

3. Snap ring; using appropriate snap ring pliers (Figure 10).
   - Apply compressor oil to inner bore to ease disassembly.
4. Shaft seal, using a J 33942-B. Insert tool, turn 45 degrees and pull shaft seal out (Figure 11).

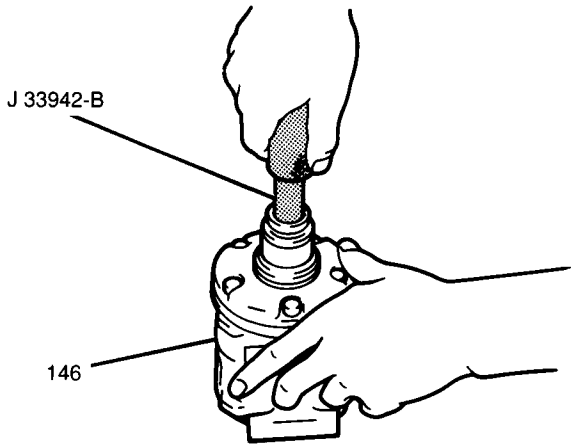

146 COMPRESSOR PC1125-1D-M-RS

Figure 11 Removing Shaft Seal

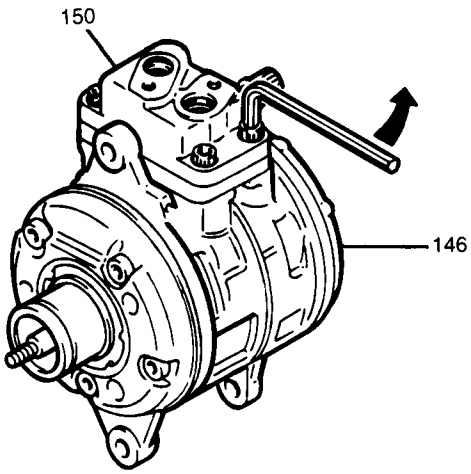

146 COMPRESSOR
150 JOINT SERVICE CONNECTOR NC0166-1D-JT-RS

Figure 12 Removing Joint Service Valve Connector

5. Four Allen-head bolts, joint service connector and O-rings (Figure 12).
   - Drain compressor oil into a container and save (Figure 13).

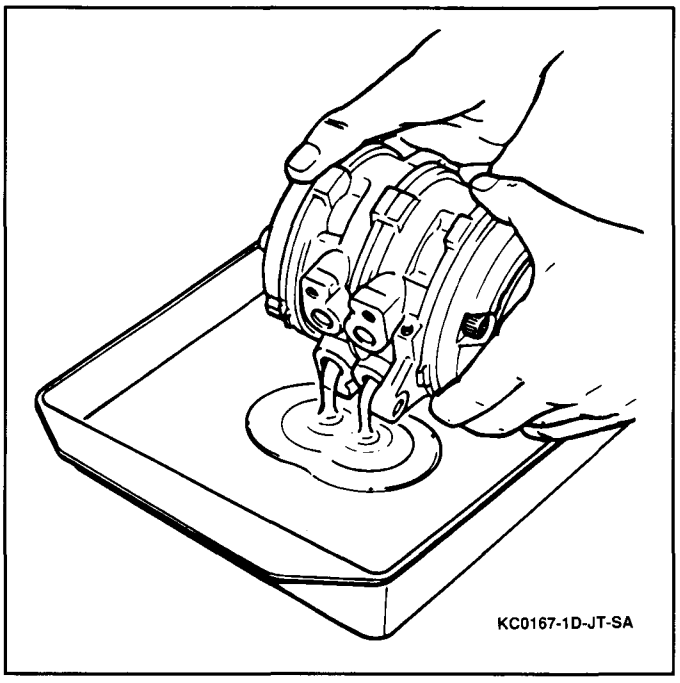

Figure 13 Draining Compressor Oil

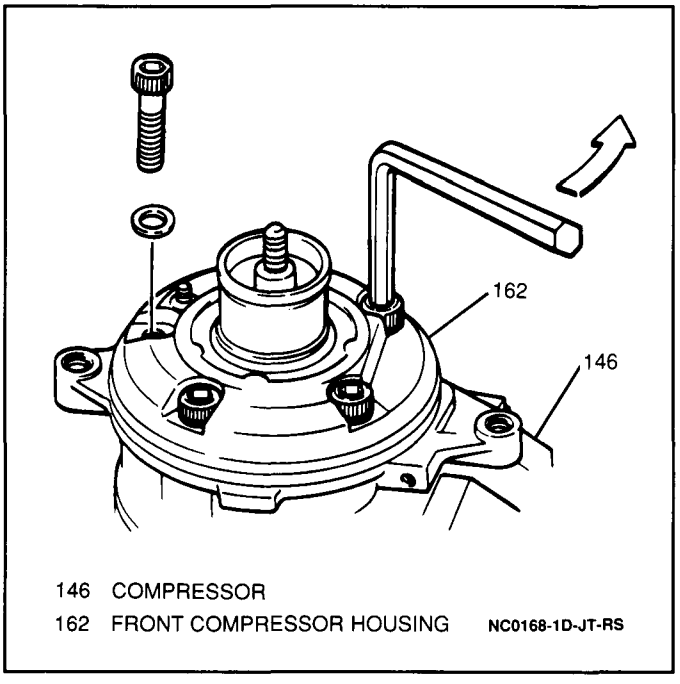

Figure 14 Removing Front Compressor Housing Bolts

6. Five Allen-head bolts and washers securing front compressor housing (Figure 14).

   NOTICE: Do not reuse five front housing washers.

7. Front compressor housing; pry off with a screwdriver (Figure 15).

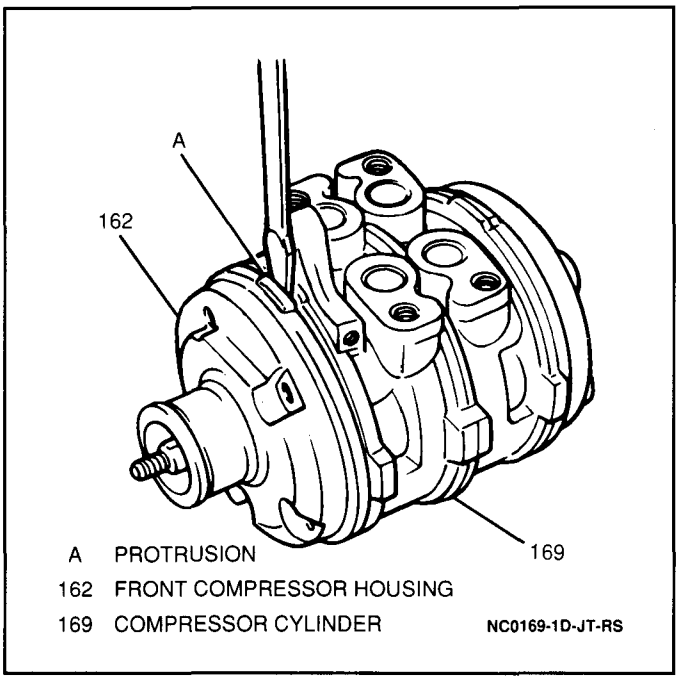

Figure 15 Removing Front Compressor Housing

8. Front gasket and reed valve from front of compressor.
9. Two pins from front of compressor and valve plate (Figure 16).

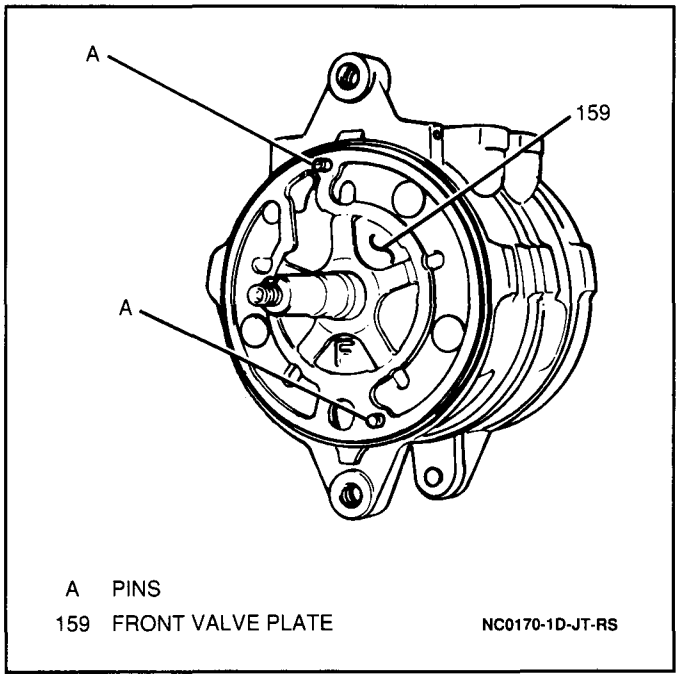

Figure 16 Front Valve Plate

10. Front suction valve from compressor.
11. Rear compressor housing; pry off with a screwdriver (Figure 17).

    NOTICE: Be careful not to damage or scratch sealing surfaces of the front and rear housings.

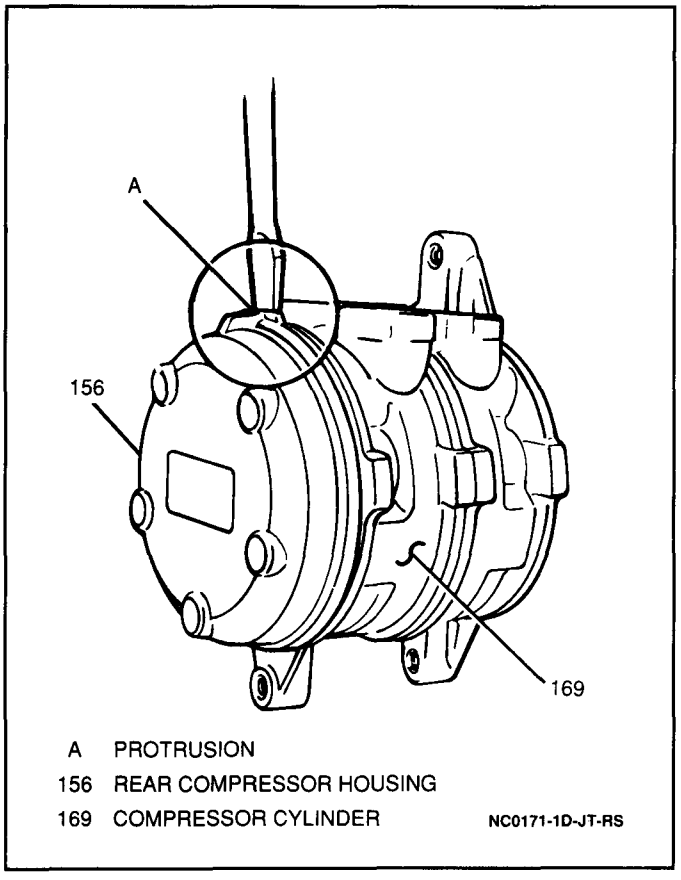

Figure 17 Removing Rear Compressor Housing

12. Rear gasket and reed valve.
13. Two pins from rear of compressor and valve plate (Figure 18).

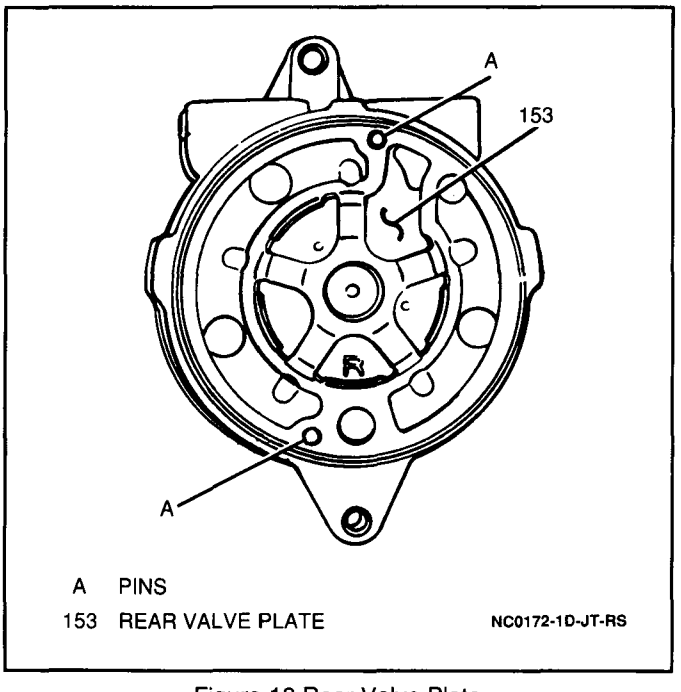

Figure 18 Rear Valve Plate

14. Rear suction plate.
15. Front and rear compressor seals and discard them (Figure 19).

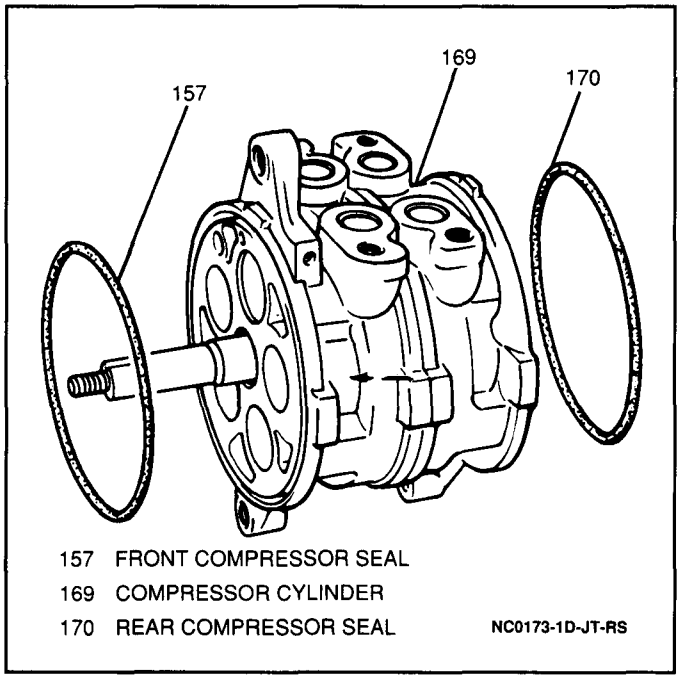

Figure 19 Front and Rear Compressor Seals

Important

- Do not disassemble the compressor any further. The compressor cylinder (subpump assembly) is replaced as a whole unit.

Clean

- Clean all compressor parts with solvent and let dry completely. When dry, apply compressor oil to them.

Inspect

- All compressor parts that were removed. Refer to the "Component Checkpoint Chart" (Figure 20).

PARTS NAME	CHECKPOINT	REMEDY
Compressor shaft seal	1. Check sealing surfaces for scratches and corrosion.	Replace
Valve plates	1. Check both surfaces for scratches and corrosion.	Replace or polish with fine oil stone
Gaskets/Reed valves 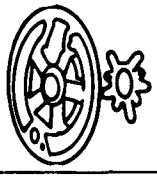	1. Check reed for cracks, scratches, deformation and corrosion.	Replace
Front compressor housing 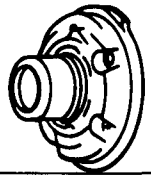	1. Check sealing surface for cracks, scratches and deformation.	Replace
Compressor cylinder 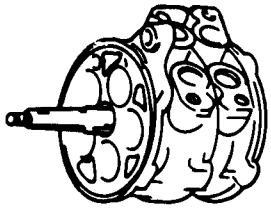	1. Check cylinder bore for scratches and corrosion. 2. Check radial bearings for poor contact, worn-out needle, scoring or pit. 3. Check shaft for excessive axial play. 4. Check piston for excessive axial play.	Replace Replace Replace Replace
Rear compressor housing 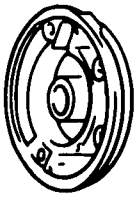	1. Check sealing surface for cracks, scratches and deformation.	Replace

PC0174-1D-M-RS

Figure 20 Component Checkpoint Chart

Install or Connect

Tools Required:
J 34614 Shaft Seal Protector
J 33942-B Seal Seat Remover

NOTICE: Do not reuse shaft seal gasket O-rings, front or rear compressor seals, or washers. Use new washers and a compressor gasket set.

Important

- Before beginning reassembly procedures, make sure that all parts are clean and that the work area is clean.

1. New compressor seal to rear of compressor. Lubricate seal with compressor oil.
2. Two pins on rear of compressor.
3. Suction valve, valve plate and reed valve to rear of compressor, lining up the plates with the 2 pins.

Important

- The front and rear suction and reed valves are identical. The front and rear valve plates are marked "F" and "R" (Figure 21).

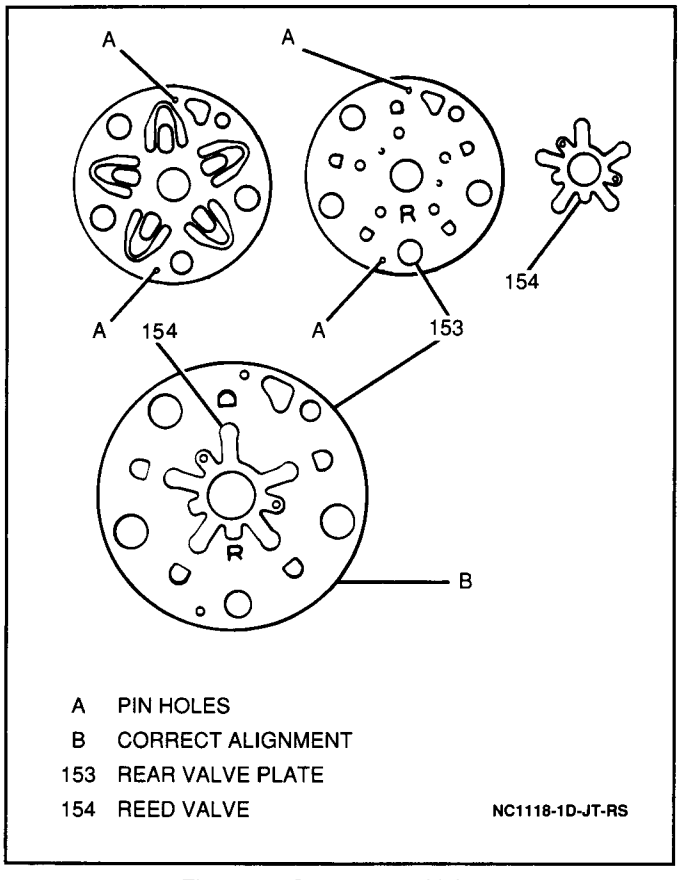

Figure 21 Compressor Valves

4. New rear gasket; lubricate with compressor oil prior to installation (Figures 22 and 23).

Important

- The front and rear gaskets are different. Do not interchange them.
- Assemble gaskets so that their protruded surfaces face upward.

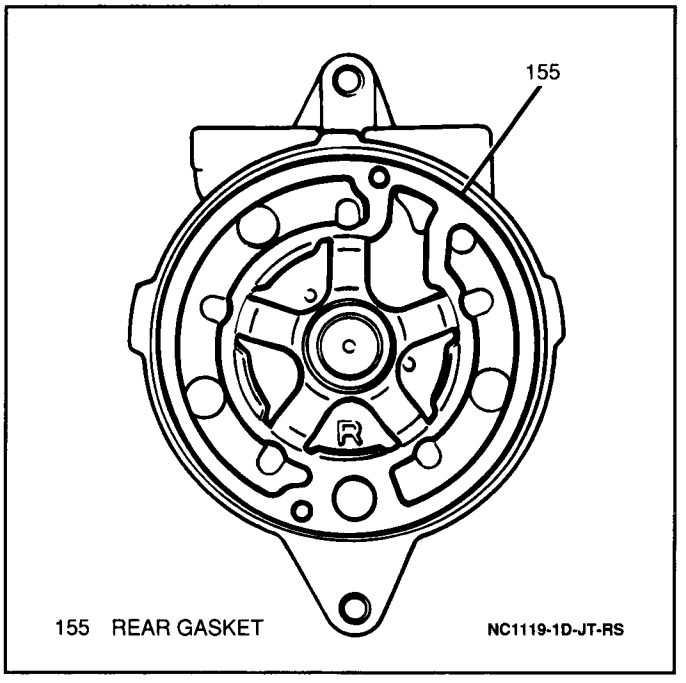

Figure 22 Rear Compressor Gasket

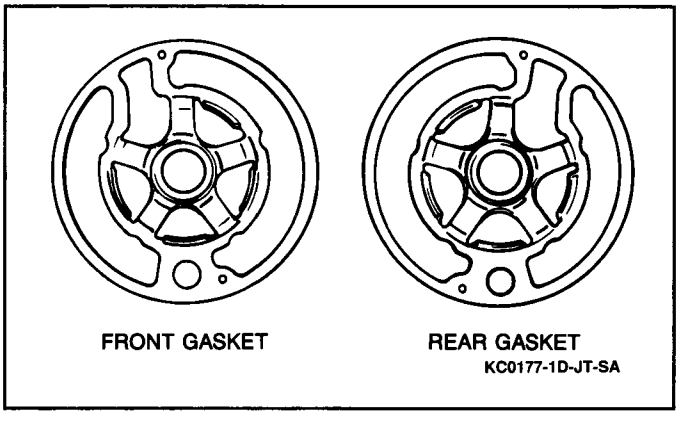

Figure 23 Front and Rear Compressor Gaskets

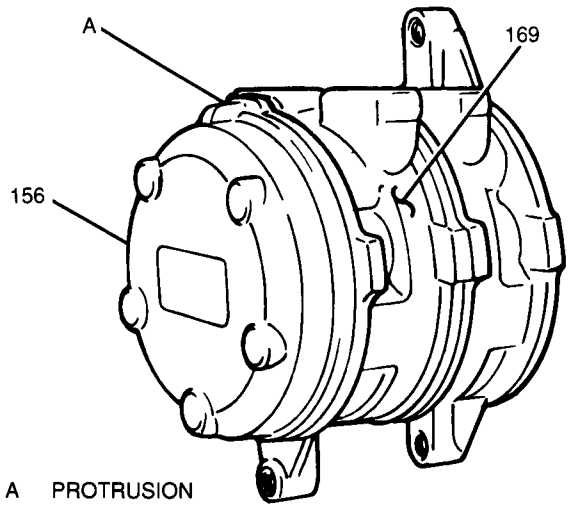

A PROTRUSION
156 REAR COMPRESSOR HOUSING
169 COMPRESSOR CYLINDER
NC0178-1D-JT-RS

Figure 24 Rear Compressor Housing Installation

5. Rear housing to compressor (Figure 24).
6. New compressor seal to front of compressor. Lubricate seal with compressor oil.
7. Two pins on front of compressor.
8. Suction valve, valve plate and reed valve to front of compressor, lining up the plates with the 2 pins.
9. New front compressor gasket; lubricate with compressor oil prior to installation (Figure 25).

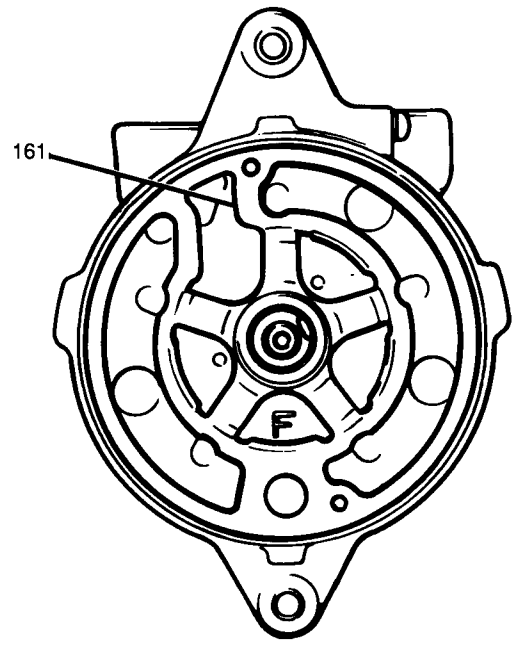

161 FRONT GASKET
NC0180-1D-JT-RS

Figure 25 Front Compressor Gasket

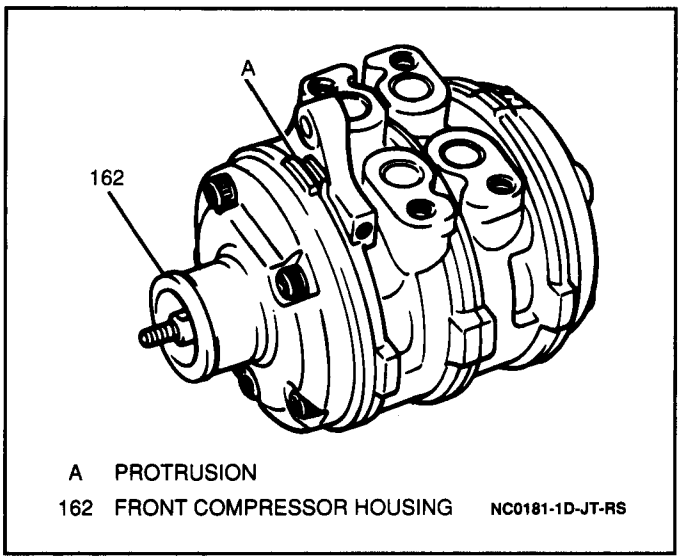

Figure 26 Front Compressor Housing Installation

10. Front compressor housing and five through bolts and new washers (Figure 26).

NOTICE: Do not reuse the five old front housing washers.

Tighten

- Compressor through bolts to 27 N·m (20 lb.ft.).

11. Compressor shaft seal.
    A. Coat the J 34614 with compressor oil and install onto compressor shaft (Figure 27).

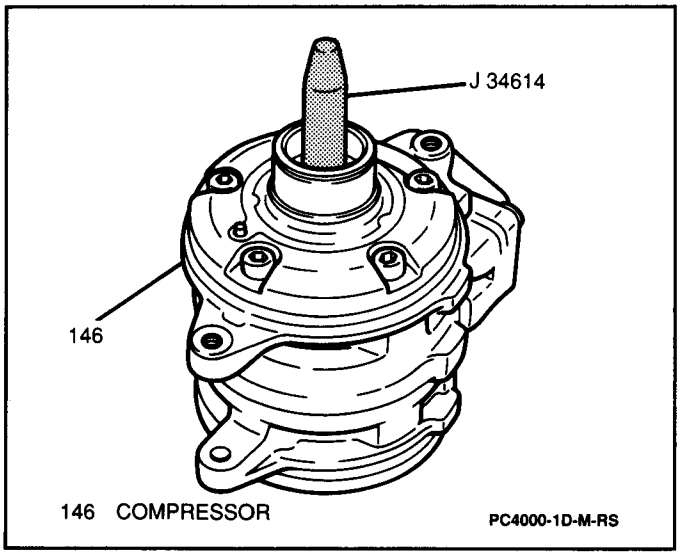

Figure 27 Installing J 34614

B. Apply compressor oil to shaft seal O-ring and install onto J 34614 (when fitting the shaft seal onto the J 34614, be sure to have the O-ring facing down, Figure 28).

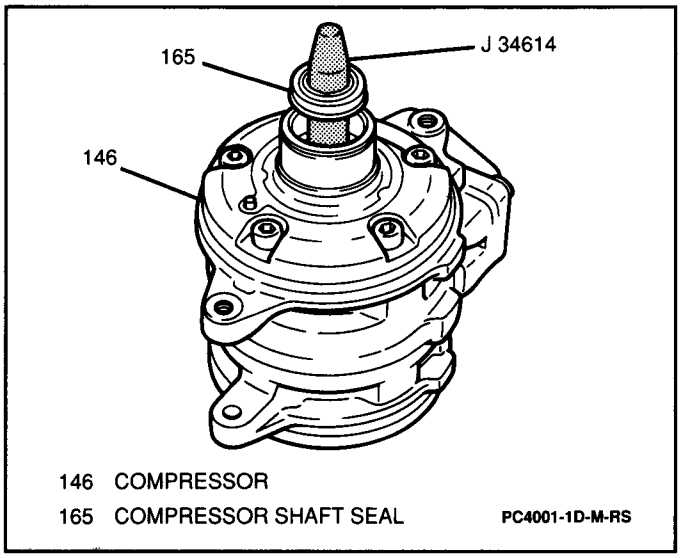

Figure 28 Installing Compressor Shaft Seal Onto J 34614

C. Place the J 33942-B onto the shaft seal.

NOTICE: Do not use a press, hammer or other similar tools to press the J 33942-B or shaft seal into place.

D. Using hand pressure only, slowly press the J 33942-B to seat the shaft seal (the shaft seal upper face must be beneath the snap ring fitting groove when seated) (Figure 29).

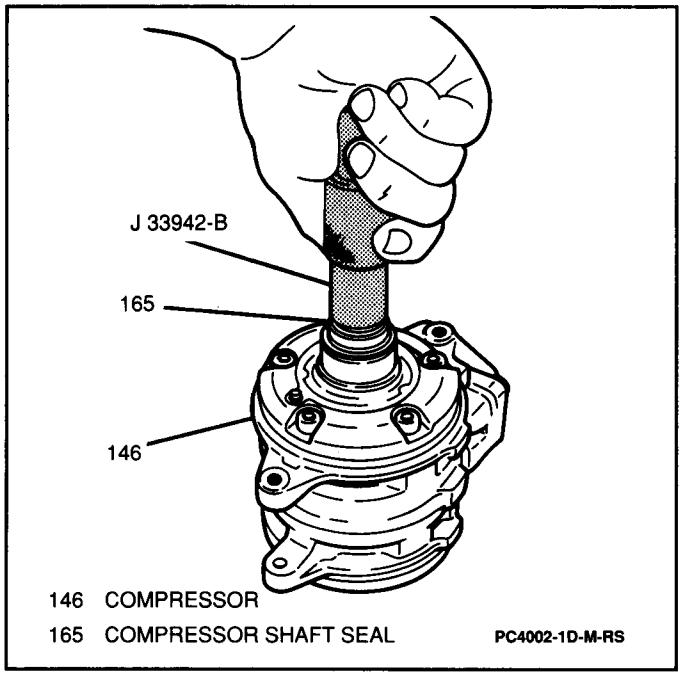

Figure 29 Installing Compressor Shaft Seal

12. New snap ring using snap ring pliers.
13. New oil felt and retainer inside the bore.

- Pour new compressor oil into compressor through service valve opening. Add the same amount of oil that was removed at the beginning of the overhaul procedure (Figure 30).

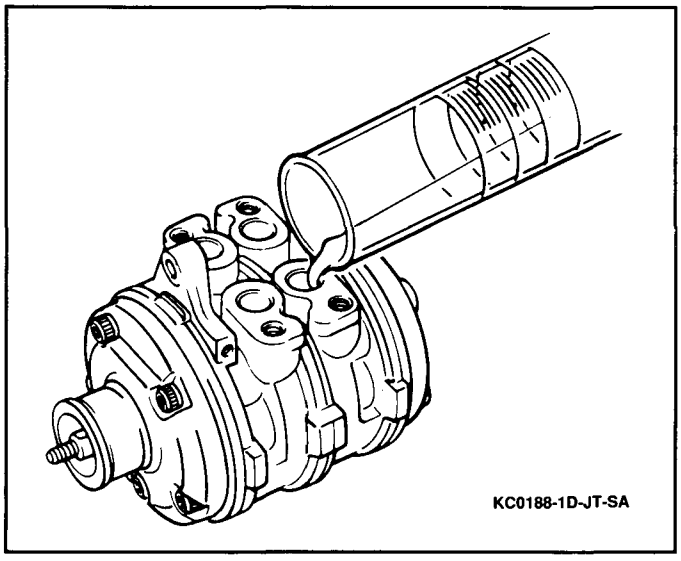

Figure 30 Adding Oil to Compressor

Important

- If a new compressor is being installed, it is shipped from the factory with 80 ml (2.7 fl.oz.) of compressor oil in it. Drain 40 ml (1.4 fl.oz.) of oil from the new compressor before installation, as that much oil remains in other components within the vehicle's refrigeration system.

14. Joint service connector. Lubricate new O-rings with compressor oil (Figure 31).

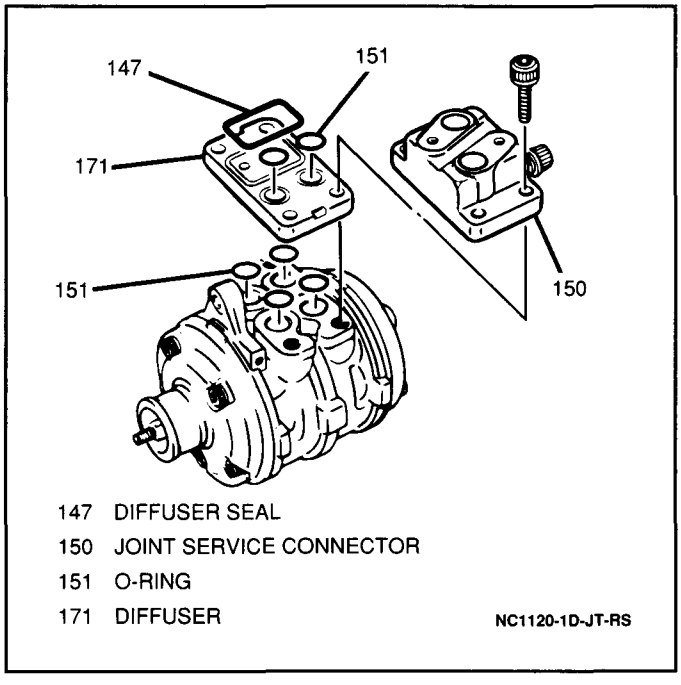

Figure 31 Joint Service Connector Installation

Tighten

- Four joint service connector bolts to 27 N·m (20 lb.ft.).

Important

- The suction port has a larger internal opening than the discharge port. The O-rings are not interchangeable.

15. A/C compressor clutch. Refer to "A/C Compressor Clutch" earlier in this section.

Inspect

- Compressor shaft rotating torque. Torque should be less than 3 N·m (27 lb.in.).

COMPRESSOR LEAK TEST

Tools Required:
J 23575-B Manifold Gage Set
J 39400 Leak Detector

Following overhaul of the compressor, conduct this leak test to make sure that unit reassembly is sound.

1. Connect a J 23575-B to compressor service valve.
2. Charge compressor with refrigerant from a refrigerant drum until the pressure is 296 kPa (43 psi).
3. Check component for leaks using a J 39400. Refer to SECTION 1B for information on gas leak detectors.
4. If leakage is found, repair or replace compressor.

SPECIFICATIONS

COMPRESSOR SPECIFICATIONS

Pressure Plate-to-Clutch Drive

Standard Clearance ..... 0.4 - 0.7 mm (0.016 - 0.028 in.)

Compressor Oil

Compressor Capacity ..... 80 ml (2.7 fl.oz.)

FASTENER TORQUES

Pressure Plate Nut ..... 17 N·m (13 lb.ft.)
Compressor Through Bolts ..... 27 N·m (20 lb.ft.)
Service Connector Bolts ..... 27 N·m (20 lb.ft.)

SERVICE PARTS INFORMATION

Component Name Used in Section 1D	Reference Name in Service Parts Catalog	Group Number
Compressor	Compressor Asm	9.170
A/C Compressor Clutch	Magnet, Compressor Clutch	9.186
Oil Felt Seal	Seal, Compressor Oil Felt	9.175
Reed Valve	Valve, Compressor Reed	9.172
Valve Plate	Plate, Compressor Valve	9.172
Suction Valve	Valve, Compressor Suction	9.172
Shaft Seal	Seal Asm, Compressor	9.175
Joint Service Connector	Connector Kit, Joint Service	9.178
Gasket	Gasket, Compressor	9.172

SPECIAL TOOLS

1
J 33942-B

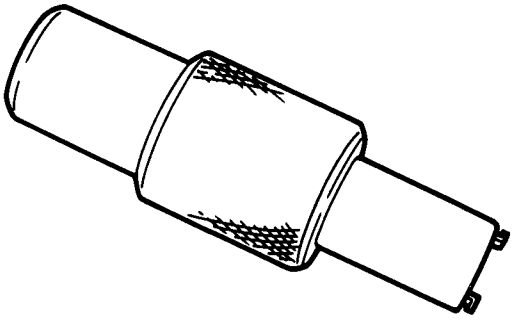

4
J 34614

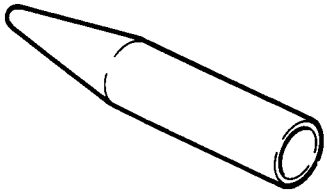

2
J 39400

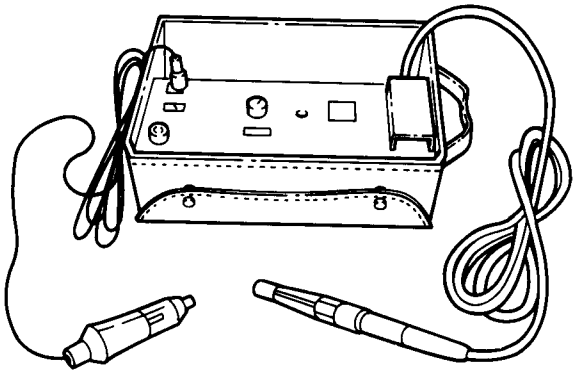

5
J 39200

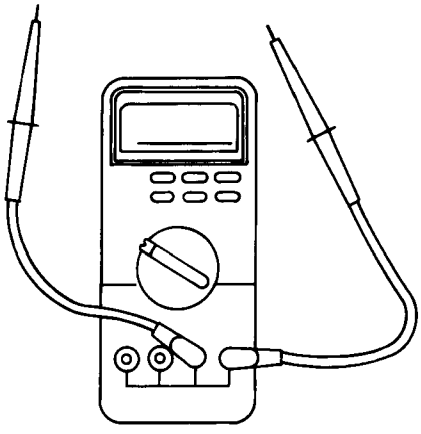

3
J 34878

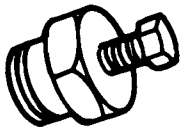

6
J 23575-B

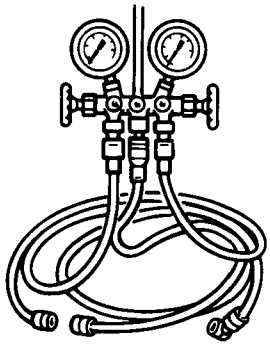

1 SEAL SEAT REMOVER
2 ELECTRONIC LEAK DETECTOR
3 PRESSURE PLATE REMOVER
4 SHAFT SEAL PROTECTOR
5 DIGITAL MULTIMETER
6 MANIFOLD GAGE SET

PC1121-1D-M-RS

SECTION 3

Steering, Suspension, Tires and Wheels

CONTENTS

Steering, Suspension, Tires and Wheels Diagnosis 3-1
Wheel Alignment 3A-1
Power Steering Gear and Pump 3B1-1
Manual Steering Gear 3B2-1
Front Suspension 3C-1
Rear Suspension 3D-1
Tires and Wheels 3E-1
Standard Steering Wheel and Column 3F1-1
Tilt Steering Wheel and Column 3F2-1

SECTION 3

STEERING, SUSPENSION, TIRES AND WHEELS DIAGNOSIS

NOTICE: When fasteners are removed, always reinstall them at the same location from which they were removed. If a fastener needs to be replaced, use the correct part number fastener for that application. If the correct part number fastener is not available, a fastener of equal size and strength (or stronger) may be used. Fasteners that are not reused, and those requiring thread-locking compound, will be called out. The correct torque values must be used when installing fasteners that require them. If the above procedures are not followed, parts or system damage could result.

CONTENTS

General Information 3-1
Diagnosis 3-1
Power Steering Pump 3-3
Steering Column 3-3
Lock System 3-3
Column 3-3
Combination Switch 3-4
Ignition Switch 3-4
Steering Gear and Pump Leaks 3-4
Seal Replacement Recommendations 3-4
Strut Dampener and Shock Absorber 3-5
Tires 3-5
Irregular and Premature Wear 3-5
Tread Wear Indicators 3-6
Radial Tire Waddle 3-6
Radial Tire Lead/Pull 3-6
Vibrations 3-9
Trim Height 3-12
Wheel Bearings 3-12
Wheel Bearing Noise 3-12
Loose Wheel Bearings 3-12
Specifications 3-14
Special Tools 3-14

GENERAL INFORMATION

Since the problems in steering, suspension, tires, and wheels involve several systems, they must all be considered when diagnosing a complaint. To avoid pursuing the wrong symptom, always road test the vehicle first. Proceed with the following preliminary checks and correct any substandard conditions which are found.

DIAGNOSIS

Inspect

- Tires for improper inflation and uneven wear.
- Joints from the column to the steering gear for loose connectors or wear.
- Front and rear suspension, and the steering gear or linkage for loose or damaged parts.
- For out-of-round or out-of-balance tires, bent wheels, and loose and/or rough wheel bearings.
- Power steering system for leaks. Also check the power steering fluid level and the pump drive belt tension.

Car Pulls (Leads)

Inspect

- For mismatched or uneven tires.
- For broken or sagging springs.
- Radial tire lateral force.
- Wheel alignment.
- Front brakes for dragging.

Abnormal or Excessive Tire Wear

Inspect

- Wheel alignment.
- For excessive toe.
- Springs for sags or breaks.
- Tire balance.
- Strut dampeners or shock absorbers for wear or damage.
- Vehicle for signs of abuse.
- Vehicle for uneven or excessive loading.
- Tires for proper inflation.

Scuffed Tires

Inspect

- Wheel alignment.
- Vehicle for signs of abuse.
- Suspension arm for damage or deformation.

Wheel Tramp

Inspect

- Tire or wheel for proper balance.
- Strut dampener or shock absorber for wear and proper operation.

Shimmy, Shake or Vibration

Inspect

- Wheel alignment.
- Tire treads for blisters or separation.

- Tire or wheel for proper balance.
- Wheel stud for excessive runout.
- Brake drum or rotor for damage or deformation.
- Tie rod ends for wear.
- Wheel trim.
- Lower ball joints for wear or damage.
- Wheel for excessive runout.
- Tire and wheel assembly for excessive loaded radial runout.

Hard Steering (Power)

Inspect

- Power steering hydraulic system.
- Steering gear adjustment.
- Steering gear for binding and rough movement.
- Steering gear mounting for proper and secure installation.

Excessive Play or Looseness in Steering System

Inspect

- Wheel alignment.
- Wheel bearings for wear or damage.
- Steering gear mounting for proper and secure installation.
- Joints from column to steering gear for proper and secure installation.
- Steering gear adjustment.
- Tie rod ends and ball joints for looseness.

Poor Steering Wheel Returnability

Inspect

- Ball joints and tie rod ends for lack of lubrication.
- Ball joints for binding.
- Steering column for binding.
- Wheel alignment.
- Valve for sticking and proper operation.
- Steering gear adjustment.
- Steering gear for binding on lower coupling.
- Tires for adequate inflation.

Abnormal Noise, Front End

Inspect

- Ball joints and tie rod ends for lack of lubrication.
- Suspension components for wear or damage.
- Control arm bushings or tie rod ends for wear or damage.
- Wheel nuts for proper and secure installation.
- Suspension bolts for proper and secure installation.
- Steering gear adjustment.
- Strut dampener, shock absorbers or mountings for wear or damage.
- Springs for proper positioning.
- Wheel bearings for excessive wear.

Wander or Poor Steering Stability

Inspect

- Tires for mismatch or uneven wear.
- Strut dampeners or shock absorbers for wear or damage.
- Springs for breaks or sags.
- Steering gear adjustment.
- Wheel alignment.
- Lack of lubrication in ball joints or tie rod ends.

Erratic Steering When Braking

Inspect

- Wheel alignment.
- Wheel bearings for wear or damage.
- Springs for breaks or sags.
- Wheel cylinder or caliper for leaks.
- Rotors for warpage.
- Caster adjustment.
- Tires for adequate inflation.

Low or Uneven Trim Height

Inspect

- Springs for breaks or sags.
- Vehicle for signs of abuse and overloading.
- Springs for correct part number installation, wear, and damage.

Ride Too Soft

Inspect

- Strut dampeners or shock absorbers for wear or damage.
- Springs for breaks, sags, or incorrect installation.

Ride Too Harsh

Inspect

- Strut dampeners, shock absorbers or springs for incorrect part number installation.

Body Leans or Sways In Corners

Inspect

- Strut dampeners, shock absorbers, and mounting for wear or damage.
- Springs for breaks or sags.
- Vehicle for signs of abuse and overloading.

Suspension Bottoms

Inspect

- Vehicle for signs of abuse and overloading.
- Strut dampeners or shock absorbers for wear or damage.
- Springs for breaks, sags, or incorrect installation.

"Dog" Tracking

Inspect

- Rear suspension arm and bushings for wear or damage.
- Rear axle for damage.
- Frame and underbody alignment for damage.

Steering Wheel Kick-Back (Power)

Inspect

- Steering hydraulic system for air in pipes/hoses and reservoir.

- Joints from column to steering gear for wear and proper and secure installation.
- Tie rod ends for proper and secure installation.
- Wheel bearings for wear or damage.

Steering Wheel Surges or Jerks (Power)

Inspect

- Hydraulic system for air in pipes/hoses or reservoir.
- Drive belt for damage or improper installation.

Cupped Tires

Inspect

- Wheel alignment.
- Strut dampeners or shock absorbers for wear or damage.
- Wheel bearings for wear or damage.
- Tire and wheel for excessive runout.
- Ball joints for wear or damage.
- Steering gear adjustment.

POWER STEERING PUMP

Foaming, Milky Power Steering Fluid, Low Fluid Level, and Possible Low Pressure

These conditions can be caused by air in the fluid, and loss of fluid due to internal pump leakage causing overflow. Check for leaks and correct fluid level. Bleed the system. Extremely cold temperatures will cause air bubbles in the system if the fluid level is low. If the fluid level is correct and fluid still foams, remove pump from vehicle and check pump housing for cracks. If housing is cracked, replace the pump.

Low Pressure Due to Steering Pump

Inspect

- Flow control valve for proper operation.
- Pressure plate for proper mating with cam ring.
- Cam ring for wear or damage.
- Pressure plate, thrust plate, and rotor for wear or damage.
- Rotor slots for proper vane operation.
- Pump for high internal leakage.

Low Pressure Due to Steering Gear

Inspect

- Housing bore for scoring or other damage.
- Valve rings and seals for leaking.

Growling Noise in Steering Pump

Inspect

- Steering gear for restriction which causes excessive backpressure.
- Pressure plates, thrust plate, or rotor for wear or damage.
- Cam ring for wear or damage.

Groaning Noise in Steering Pump

Inspect

- Hydraulic system for air in pipes/hoses or reservoir.
- Fluid level.
- Pump mounting for proper and secure installation.

Rattling Noise in Steering Pump

Inspect

- Rotor slots for proper vane operation.
- Vane for proper installation.

Swishing Noise in Steering Pump

Inspect

- Flow control valve for damage.

Whining Noise in Steering Pump

Inspect

- Pump shaft bearing for damage.
- Pressure plates and vanes for damage.

STEERING COLUMN

LOCK SYSTEM

Will Not Unlock

Inspect

- Lock cylinder for damage.
- Interlock cable for damage.

Will Not Lock

Inspect

- Lock cylinder for damage.
- Shift linkage for proper adjustment.
- Ignition switch for free movement.
- Park lock cable for damage.

High Lock Effort

Inspect

- Lock cylinder for damage.
- Ignition switch for damage.
- Shift linkage adjustment.

Key Cannot Be Removed With Ignition Switch in "Off-Lock" Position

Inspect

- Lock cylinder for damage.
- Linkage adjustment.

COLUMN

Noise in Column

Inspect

- Joints from the column to the steering gear for proper and secure installation.

- Column alignment.
- Bearings for sufficient lubrication.
- Lower and upper steering shaft bearings for wear or damage.
- Shaft lock snap ring for proper seating.

High Steering Shaft Effort

Inspect

- Upper and lower bearing for damage.

Lash in Steering Column

Inspect

- Instrument panel-to-column upper and lower bracket mounting bolts for proper and secure installation.

COMBINATION SWITCH

This diagnosis covers mechanical problems only. Refer to SECTION 8A for combination switch electrical diagnosis.

Turn Signal Will Not Stay in Turn Position

Inspect

- Switch for proper and secure installation.
- Cancelling mechanism for broken or missing components.

Turn Signal Will Not Cancel

Inspect

- Cancelling mechanism for broken or missing components.

Turn Signal Difficult to Operate

Inspect

- Switch for proper and secure installation.
- Switch for dirt or corrosion build up.

Turn Signal Will Not Indicate Lane Change

Inspect

- Switch for proper and secure installation.

IGNITION SWITCH

This diagnosis covers mechanical problems only. Refer to SECTION 8A for ignition switch electrical diagnosis.

Electrical System Will Not Function

Inspect

- Ignition switch for damage.
- Ignition switch for proper and secure installation.
- Ignition switch electrical connector for proper and secure installation.

Ignition Switch Will Not Turn

Inspect

- Ignition switch for proper and secure installation or damage.

STEERING GEAR AND PUMP LEAKS

General Procedure

1. Check for the following conditions:
   - Overfilled reservoir.
   - Air bubbles in fluid.
   - Loose pipe/hose connections.
2. When service is required:
   - Clean leakage area upon disassembly.
   - Replace leaking seal.
   - Check component sealing surfaces for damage.
   - Reset bolt torque to specifications, where required.
3. Some complaints about the power steering system may be reported as:
   - Fluid leakage on garage floor.
   - Fluid leaks visible on steering gear or pump.
   - Growling noise from steering gear or pump, especially when parking or when engine is cold.
   - Loss of power steering when parking.
   - Heavy steering effort.
4. When troubleshooting these kinds of complaints, check for an external leak in the power steering system.

External Leakage Check

The purpose of this procedure is to pinpoint the location of the leak. In some cases, the leak can easily be located. However, seepage-type leaks may be more difficult to isolate. To locate seepage leaks, use the following method.

1. With the engine off, wipe dry the entire power steering system.
2. Check the fluid level in the pump's reservoir. Add fluid if necessary.
3. Start the engine, then turn the steering wheel from stop to stop several times. Do not hold it at a stop for any length of time, as this can damage the power steering pump. It is easier if someone else operates the steering wheel while you search for the seepage.
4. Find the exact area of the leak and repair leak.

SEAL REPLACEMENT RECOMMENDATIONS

Lip seals, which seal rotating shafts, require special treatment. This type of seal is used on the steering gear and on the drive shaft of the pump. When there is a leak in one of these areas, always replace the seal(s), after inspecting and thoroughly cleaning the sealing surfaces. Replace the shaft only if very severe pitting is found. If the corrosion in the lip seal contact zone is slight, clean the surface of the shaft with crocus cloth. Replace the shaft only if the leakage cannot be stopped by first smoothing with crocus cloth.

STRUT DAMPENER AND SHOCK ABSORBER

The strut dampener is basically a shock absorber. Strut dampeners are easier to extend and retract by hand than are shock absorbers.

The following procedure includes both on-vehicle and bench checks to be done when evaluating the performance of strut dampeners and shock absorbers.

Struts or Shock Absorbers Seem Weak

For struts, follow Steps 1 through 4.

1. Check and adjust tire pressures to the pressures shown on the tire placard, located on the driver's side door lock pillar.
2. Note the load conditions under which the vehicle is normally driven.
3. If practical, ride with the owner to be sure you understand the complaint before proceeding to next step.
4. Test each strut dampener/shock in turn by quickly pushing down, then lifting up, the corner of the bumper nearest the strut dampener/shock being checked. Use the same amount of effort on each test and note the resistance on compression and rebound. Compare this with a similar vehicle having acceptable ride quality. Both strut dampeners/shocks should provide the same feeling of resistance.
5. Support the rear suspension at least enough to unload the shock mounts.
6. Disconnect the lower shock mountings on one axle set. Stroke the shocks at various rates of speed, through maximum travel in both directions. Compare the two sides for rebound and compression resistance. Rebound resistance is normally twice as strong as compression. The right and left shocks must feel comparable. Differences between front and rear are normal. If in doubt about the condition, compare with a shock known to be good.

Struts or Shock Absorbers are Noisy

For struts, follow Steps 1 through 3.

1. Check all mountings for proper torque. A loose mounting will cause noise.
2. If all mountings are intact, bounce the vehicle as in Step 4 to isolate the suspected unit.
3. If practical, ride with the owner to be sure you understand the complaint.
4. If one of the rear shocks is noisy, the rear axle should be supported at least enough to unload the shock mounts. Disconnect the lower mounting of the suspected shock. Quickly push the shock all the way in, then all the way out. A hissing noise is normal.
5. Other objectionable noises may be detected by stroking. Any sound other than hissing is abnormal; replace the shock.

Leaks

1. Fully extend the struts/shocks (wheels unsupported) to expose the seal cover area for inspection.
2. Look for signs of leaks in the seal cover area.
3. A slight trace of fluid is NOT cause for replacement; the seal permits some seepage to lubricate the piston rod. There is a built in fluid reserve to allow for seepage.
4. A leaking strut dampener/shock can easily be found because there will be fluid around the seal cover and an excessive amount of fluid on the strut dampener/shock. A leaking strut dampener/shock must be replaced.

TIRES

IRREGULAR AND PREMATURE WEAR

Figure 1

Irregular and premature tire wear has many causes. Some of them are: incorrect inflation pressures, lack of regular rotation, driving habits, or improper wheel alignment. If wheel alignment is reset due to tire wear condition, always reset toe as close to zero degrees as the specification allows.

If the following conditions are noted, rotate the tires:

- Front tire wear is different from rear.
- Left and right front tire wear is unequal.
- Left and right rear tire wear is unequal.

Check wheel alignment if the following conditions are noted:

- Left and right tire wear is unequal.
- Wear is uneven across the tread of any front tire.
- Front tire treads have a scuffed appearance with "feather" edges on one side of the tread ribs or blocks.

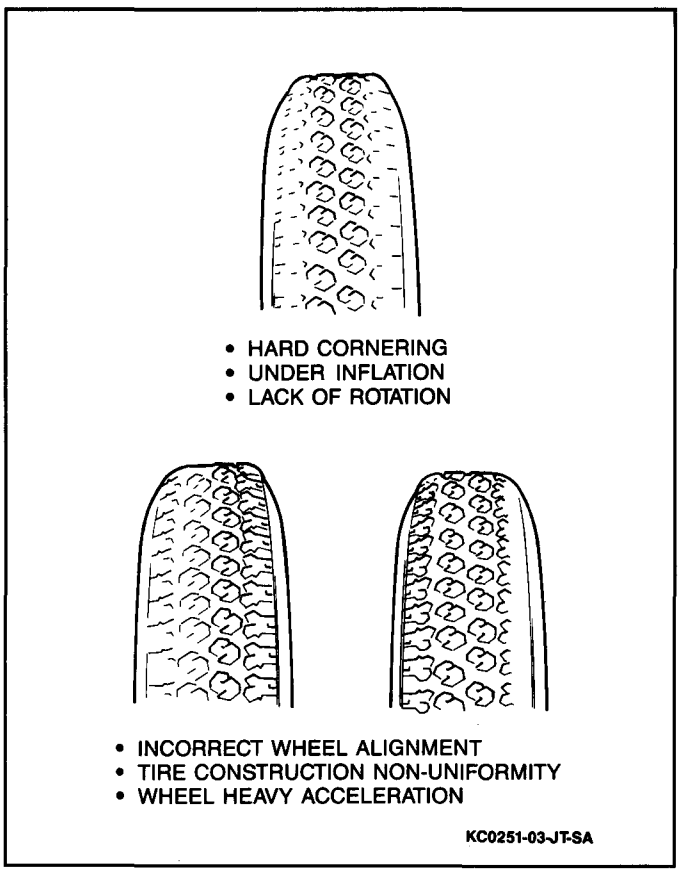

Figure 1 Tire Wear Diagnosis

TREAD WEAR INDICATORS

Figure 2

The original equipment tires have built-in tread wear indicators to show when tires need replacement. These indicators will appear as bands when the tire tread depth becomes shallow. When the indicators appear in three or more grooves at six locations, tire replacement is recommended.

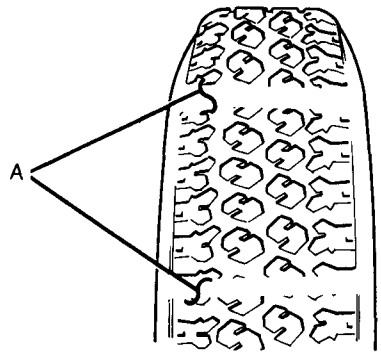

A WEAR INDICATORS

NC0252-3-JT-RS

Figure 2 Tire Tread Wear

RADIAL TIRE WADDLE

Figure 3

Waddle is side-to-side movement at the front and/or rear of the vehicle. It is caused by the steel belt not being straight within the tire, or by excessive lateral runout of the tire or wheel. It is most noticeable at low speeds, 8 to 48 km/h (5 to 30 mph). It may also appear, however, as ride roughness at 80 to 113 km/h (50 to 70 mph).

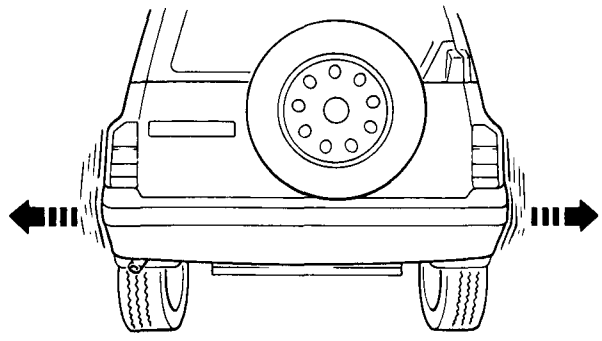

KC0253-03-JT-SA

Figure 3 Radial Tire Waddle

The vehicle can be road tested to determine which end of the vehicle has the faulty tire. If the waddle tire is on the rear, the rear end of the vehicle will shake from side to side or "waddle." From the driver's seat it feels as though someone is pushing on the side of the vehicle.

If the faulty tire is on the front, the waddle is more visual. The front sheet metal appears to be moving back and forth and the driver feels as though he is at the pivot point in the vehicle.

Waddle can be quickly diagnosed by using a tire problem detector. (TPD) and following the equipment manufacturer's recommendations.

If a TPD is not available, the more time consuming method of substituting known good tire/wheel assemblies on the problem vehicle can be used as follows:

1. Road test vehicle to determine if the waddle is coming from the front or rear.
2. Install tires and wheels that are known to be good (from a similar vehicle) in place of those on the offending end of the vehicle. If the waddle cannot be isolated to front or rear, start with the rear tires.
3. Road test again. If improvement is noted, install originals one at time until offender is found. If no improvement is noted, install known good tires in place of all four. Then, install originals one at a time until offender is found.

RADIAL TIRE LEAD/PULL

Figure 4

"Lead/Pull" is the deviation of the vehicle from a straight path on a level road with no pressure on the steering wheel.

Lead is usually caused by:

A. Incorrect alignment.
B. Uneven brake adjustment.
C. Tire construction.

The way in which a tire is built can produce lead in the vehicle. An example of this is placement of the belt. Off-center belts on radial tires can cause the tire to develop a side force while rolling straight down the road. If one side of the tire is a little larger diameter than the other, the tire will tend to roll to one side. This will also cause the tire to develop a side force which can produce vehicle lead.

The radial tire lead/pull diagnosis chart should be used to make sure that front wheel alignment is not mistaken for tire lead (Figure 4).

1. Part of the lead diagnosis procedure is different from the proper tire rotation pattern currently in the owner and service manuals. If a medium to high mileage tire is moved to the other side of the vehicle, be sure to check that ride roughness does not develop.
2. Rear tires will not cause lead.

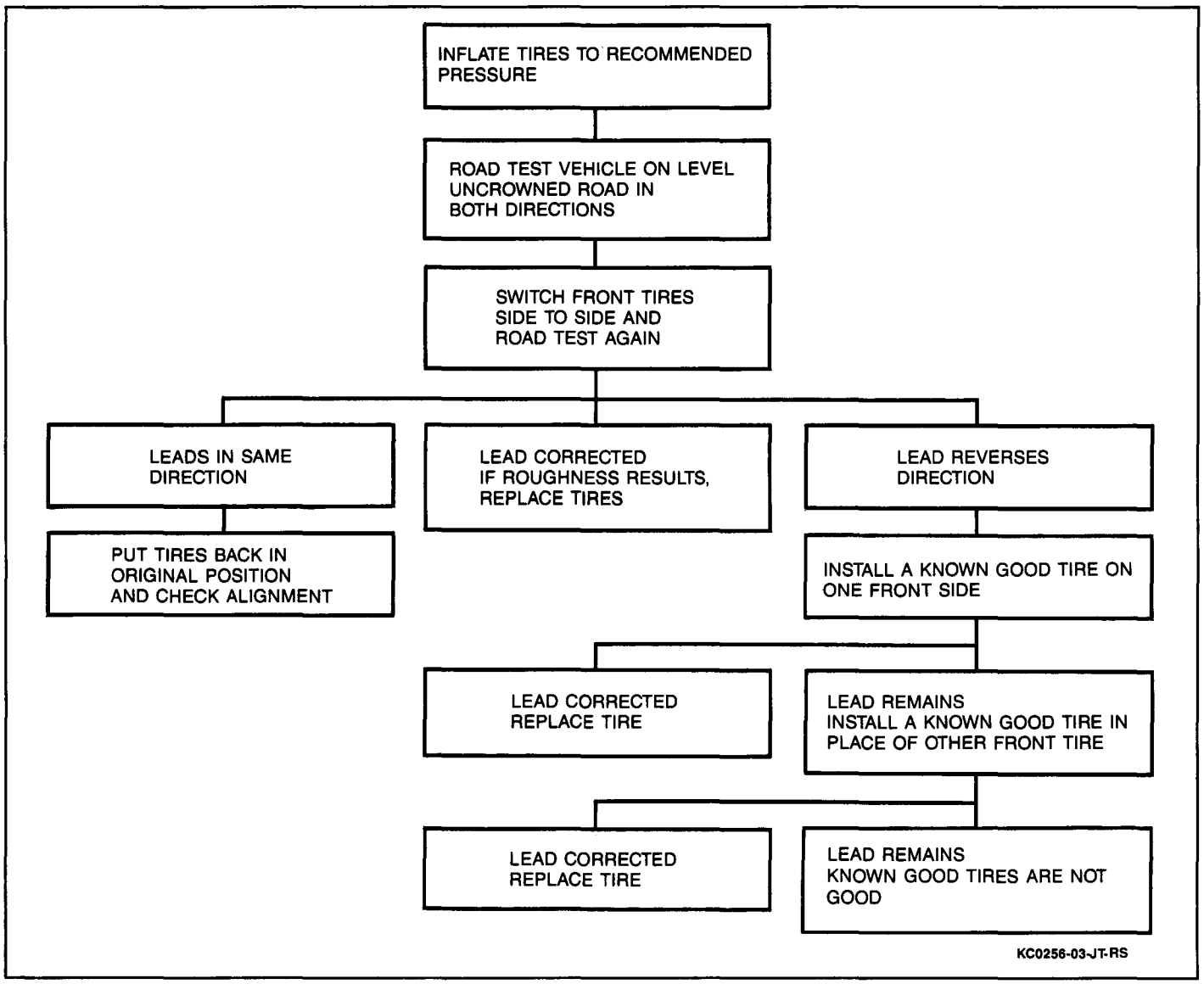

Figure 4 Lead/Pull Diagnosis Chart

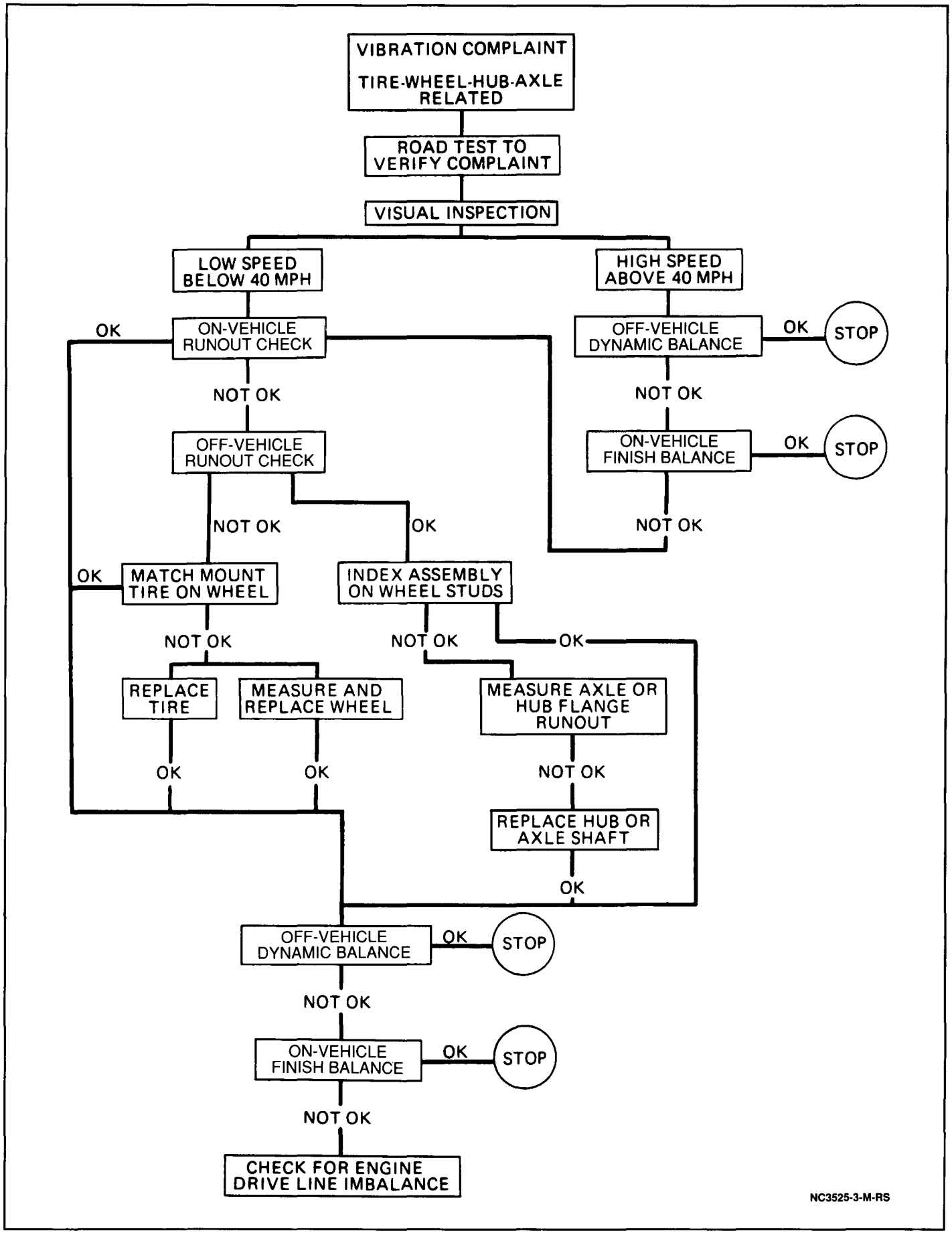

Figure 5 Vibration Complaint Chart

VIBRATIONS

Wheel unbalance causes most of the highway speed vibration problems. If a vibration remains after dynamic balancing, it can be caused by three things (Figures 5 and 6):

1. Tire runout.
2. Wheel runout.
3. Tire stiffness variation.

Measuring tire and/or wheel free runout will uncover only part of the problem. All three causes, known collectively as loaded radial runout, must be checked by using a tire problem detector (TPD). If a TPD is not available, the more time consuming method of substituting known good tire and wheel assemblies on the problem vehicle can be used.

Low-speed vibrations, those occurring at less than 64 km/h (40 mph), are usually runout related. Highway speed vibrations, those speeds above 64 km/h (40 mph), can be caused by either imbalance or runout.

Prior to performing any work, always road test the car and perform a careful visual inspection for:

- Obvious tire and wheel runout.
- Obvious drive axle or propeller shaft runout.
- Proper tire inflation.
- Incorrect trim height.
- Bent or damaged wheels.
- Debris build-up on the tire or wheel.
- Loose or missing wheel weights or wheel nuts.
- Irregular or excessive tire wear.
- Proper tire bead seating on rim.
- Damaged tires: tread deformations, separations or bulges from impact damage. Slight sidewall indentations are normal and will not affect ride quality.

Balance is the easiest procedure to perform and should be done first if the vibration occurs at highway speeds. An off-vehicle, two-plane dynamic balance should be performed first. This will correct any imbalance in the tire and wheel assembly.

An on-vehicle finish balance may also be required. This will correct any brake drum, rotor, or wheel cover imbalance. If balancing does not correct the highway speed vibration, or if the vibration occurs at low speeds, runout is the probable cause. Runout can be caused by the tire, wheel, or the way the wheel is attached to the vehicle. To investigate the possibility of wheel runout, refer to the following procedures:

Tools Required:
J 8001 Dial Indicator Set
J 26900-13 Magnetic Base

A. If runout is suspected, the free runout of the tire and wheel assembly should first be measured on the vehicle using a J 8001 and a J 26900-13. Refer to SECTION 3A for lateral wheel runout measurement procedures. To measure radial tire runout, position the J 8001 and J 26900-13 on the center of the tire tread. Rotate the tire to read radial tire runout. For tire lateral runout, position the dial indicator on the tire sidewall, as close to the tread as possible and rotate wheel. The total tire and wheel on-vehicle runout should be less than 1.5 mm (0.060-inch); if either measurement exceeds this number, proceed to Step B.

B. If the on-vehicle radial or lateral tire runout measured in Step A exceeds specification, mount the tire and wheel on a dynamic balancing machine and measure again. Using the same runout measuring procedure found in Step A, record the amount of tire runout at its highest point. Then measure wheel runout. If the wheel exceeds specifications, replace it (Refer to SECTION 3A). If the tire and wheel radial or lateral runout exceeds 1.3 mm (0.050-inch) at the tire tread, proceed to Step C.

C. If the off-vehicle tire and wheel radial or lateral runout measured in Step B exceeds 1.30 mm (0.050-inch), match mount the high radial runout point of the tire to the low radial runout point of the wheel. Reinflate, mount on the dynamic balance machine, and again measure and record the radial and lateral runout and its location, as in Step B. In many cases, match mounting the tire on the wheel will bring the assembly's runout into acceptable range of less than 1.30 mm (0.050-inch).

D. If the runout of the tire and wheel assembly is within specification limits when measured off the vehicle, yet exceeds the limits when measured on the vehicle, the attachment of the tire and wheel assembly to the hub is the probable cause. Rotate the assembly's two wheel studs and recheck the runout. Several positions may have to be tried to find the best location.

E. If the tire and wheel assembly runout cannot be reduced to an acceptable level, remove the assembly and measure wheel stud runout using a J 8001 and a J 26900-13. Zero the dial indicator button on one stud. Gently lift the button off the stud and rotate flange to position the next stud on the indicator. Record the runout of all studs. The dial indicator should read zero when repositioned on the first stud that was checked. If runout exceeds 0.76 mm (0.030-inch), the hub or axle shaft should be replaced.

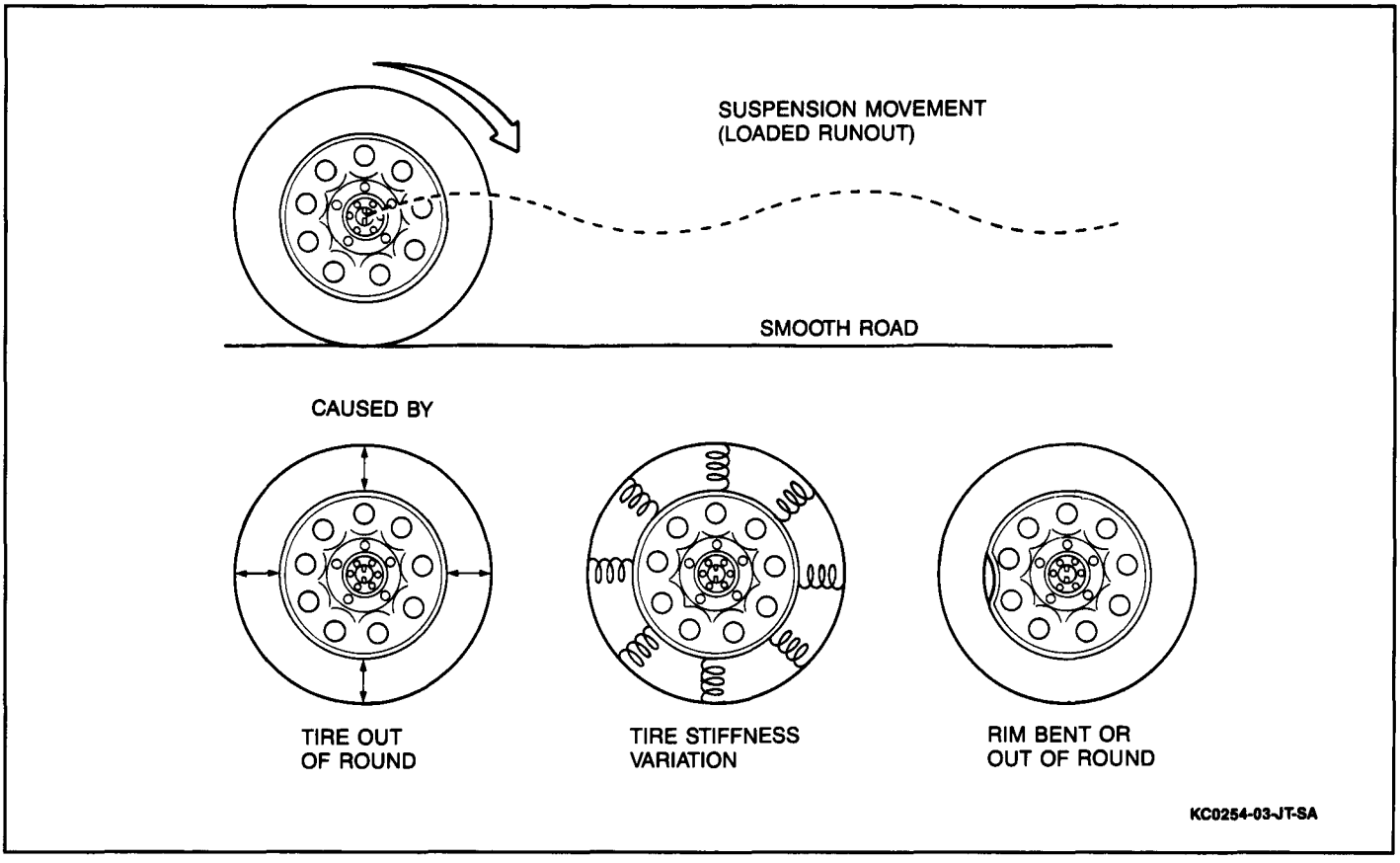

Figure 6 Causes of Vibration

Whenever a tire is rotated on the wheel, or a tire or wheel is replaced, the assembly must be rebalanced. In addition to balance and tire and wheel runout, tire stiffness variation (loaded radial runout) can also cause a vibration. Stiffness variation, however, is impossible to measure without a tire problem detector (TPD) or a loaded radial runout buffer.

The TPD is a roller drum that slowly rotates the tire while under load and mounted on the vehicle. Tire stiffness variation causes wheel spindle movement which can be measured.

The loaded radial runout buffer is a more automated machine that slowly rotates the tire and wheel off the vehicle under load with a roller drum and measures the tire's stiffness variation. It will then "match" the tire to the wheel by buffing off small amounts of rubber from the outer tread rows at the stiff spot. This procedure is usually effective in balancing, especially when used as a measuring device and for fine buffing only.

The TPD and loaded radial runout buffer are two methods that will measure or correct tire stiffness variation, tire runout and wheel runout. However, because such equipment is not always available, and both have their disadvantages, the more basic procedure of measuring free runout with a dial indicator (as previously detailed) is more practical. The free runout of the tire will usually correspond with the tire's stiff spot.

The substitution method of vibration diagnosis can also be used. Install a know good set of tire and wheel assemblies. If these correct the vibration, the original assemblies should be reinstalled one at a time until the vibration returns. This will point out the tire with excess stiffness variation.

Tire stiffness variation will fluctuate depending upon the direction of the tire's rotation.

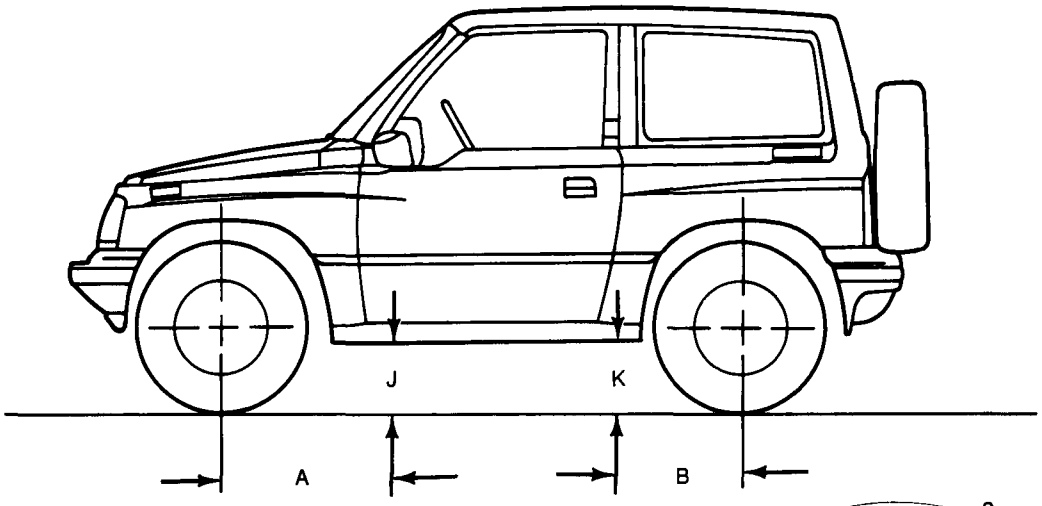

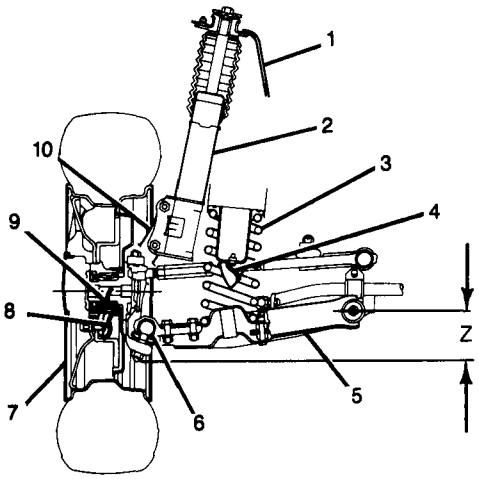

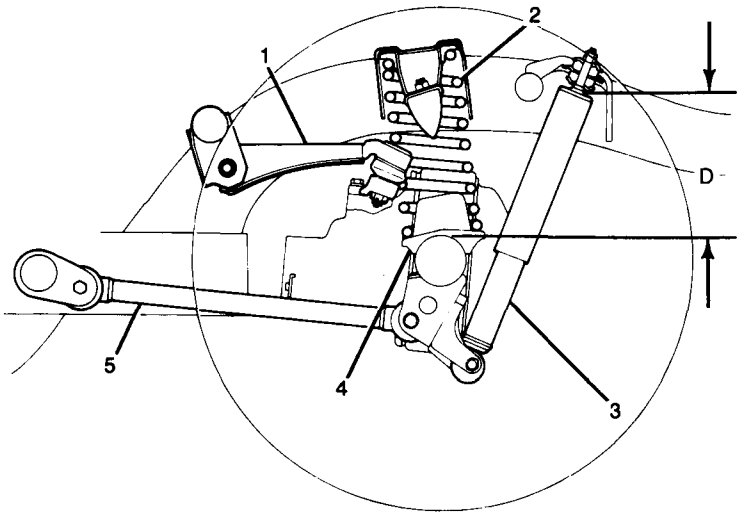

1 BODY
2 STRUT
3 COIL SPRING
4 BUMP STOPPER
5 CONTROL ARM
6 LOWER BALL JOINT
7 WHEEL
8 WHEEL HUB
9 WHEEL BEARING
10 STEERING KNUCKLE

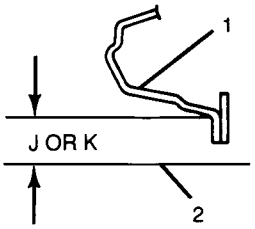

1 BODY
2 GROUND

1 REAR SUSPENSION UPPER ARM
2 REAR COIL SPRING
3 REAR SHOCK ABSORBER
4 REAR AXLE HOUSING
5 TRAILING ROD

MODEL	A	B	D	J	K	Z
2WD FOLDING TOP	500 mm (19.70")	500 mm (19.70")	212 mm (8.35")	282 mm (11.10")	303 mm (11.93")	91 mm (3.60")
4WD FOLDING TOP	500 mm (19.70")	500 mm (19.70")	212 mm (8.35")	301 mm (11.85")	322 mm (12.68")	91 mm (3.60")
4WD HARDTOP	500 mm (19.70")	500 mm (19.70")	212 mm (8.35")	301 mm (11.85")	322 mm (12.68")	91 mm (3.60")

NC3000-3-JT-RS

Figure 7 Trim Height

TRIM HEIGHT

Trim height refers to the distance from the bottom of the vehicle's body to the ground. In other words, the body trim's ground clearance. Several factors can influence what a vehicle's trim height will be at any given time: tire inflation, additional weight in the vehicle, the condition of the struts and springs after the vehicle has accumulated some mileage, and non-original tire brand and size can all affect trim height.

Before measuring trim height, perform the following steps; then refer to the specifications shown in Figure 7:

- Make sure all tires are properly inflated.
- Remove all extraneous weight from the vehicle.
- Bounce the front and rear of the vehicle up and down a few times to stabilize the suspension.
- Make sure the fuel tank is at least 1/2 full.
- Securely fasten the spare tire and jack within the rear luggage compartment.
- Measure the vehicle body-to-ground clearance several times in between bouncing the vehicle's suspension. The true trim height should be an average of several measurements.
- Close hood and all doors.

WHEEL BEARINGS

The four wheel drive version of this vehicle has non-serviceable sealed cartridge bearings both front and rear. The two wheel drive version has sealed bearings in the rear and serviceable, non-sealed bearings in front. If any fault is found with a sealed wheel bearing, it must be replaced.

WHEEL BEARING NOISE

A road test can usually indicate excessive wheel bearing noise. Although it is difficult to verbally describe sound, sealed wheel bearings generally emit a kind of "howling" sound when they go bad. This sound is only present when the vehicle is moving, it is constant and unwavering, and it increases in loudness and pitch with vehicle speed. If wheel bearing noise cannot be positively diagnosed, or if the front or rear origin of the noise cannot be determined, perform the following wheel bearing test:

1. Raise and suitably support vehicle. Refer to SECTION 0A.
2. Spin wheels by hand; check for out-of-round tires, out-of-balance tires, bent rims or loose wheel bearings.
3. On two wheel drive vehicles, spin front wheels using a commercial wheel spinner. Spin all driven wheels using engine.
4. If noise can be heard from the passenger compartment, replace the noisy wheel bearing cartridge. Refer to SECTION 3C for front wheel bearing replacement procedures, or SECTION 3D for rear wheel bearing replacement procedures.
5. Lower vehicle.

LOOSE WHEEL BEARINGS

Figures 8 and 9

Tools Required:
J 8001 Dial Indicator Set
J 26900-13 Magnetic Base

Perform the following test to check for play in the bearing cartridge assembly:

1. Raise and suitably support vehicle. Refer to SECTION 0A.
2. Remove front or rear tire and wheel assemblies. Refer to SECTION 3E.
3. For disc brakes:
   A. Reinstall two wheel nuts to hold rotor tight.
   B. Compress caliper piston to free caliper assembly.
   C. Mount a J 8001 and a J 26900-13 on front wheel hub (Figure 8).
   D. Push and pull brake rotor by hand. If rotor movement exceeds 0.05 mm (0.0020-inch), replace the wheel bearing. Refer to SECTION 3C.
4. For drum brakes:
   A. Remove brake drum.
   B. Mount a J 8001 and a J 26900-13 on rear hub unit (Figure 9).
   C Push and pull hub unit by hand. If hub movement exceeds 0.05 mm (0.0020-inch), replace the wheel bearing. Refer to REAR SECTION 3D.
5. Install tire and wheel assemblies. Refer to SECTION 3E.
6. Lower vehicle.

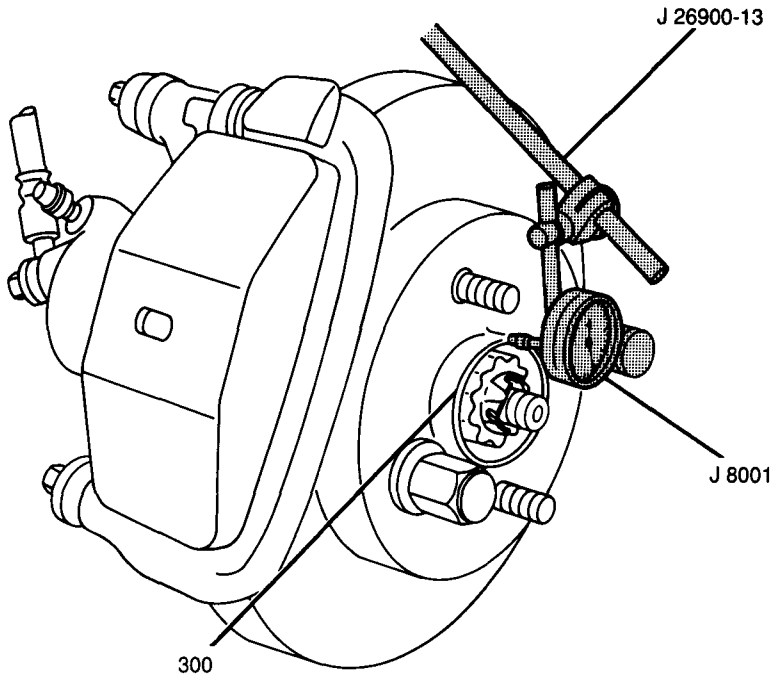

300 FRONT WHEEL HUB

NC3001-3-JT-RS

Figure 8 Checking Front Wheel Bearing Play — Typical

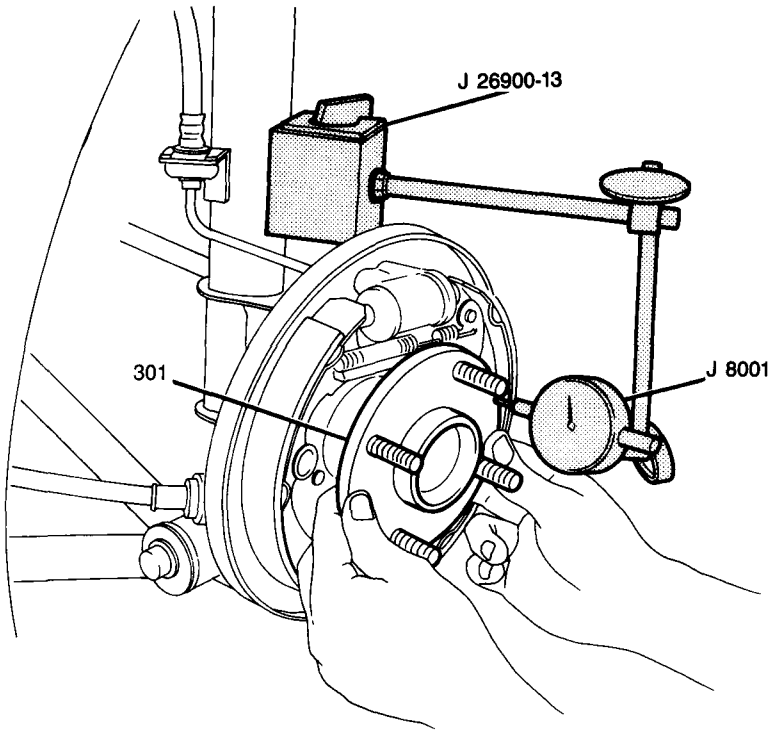

301 HUB UNIT ASSEMBLY

NC1012-3-JT-RS

Figure 9 Checking Rear Wheel Bearing Play — Typical

SPECIFICATIONS

Maximum Wheel Bearing Cartridge Play ..... 0.05 mm (0.0020 in.)
Maximum Tire and Wheel Radial or Lateral Runout ..... 1.30 mm (0.050 in.)
Maximum Wheel Stud Runout ..... 0.76 mm (0.030 in.)

SPECIAL TOOLS

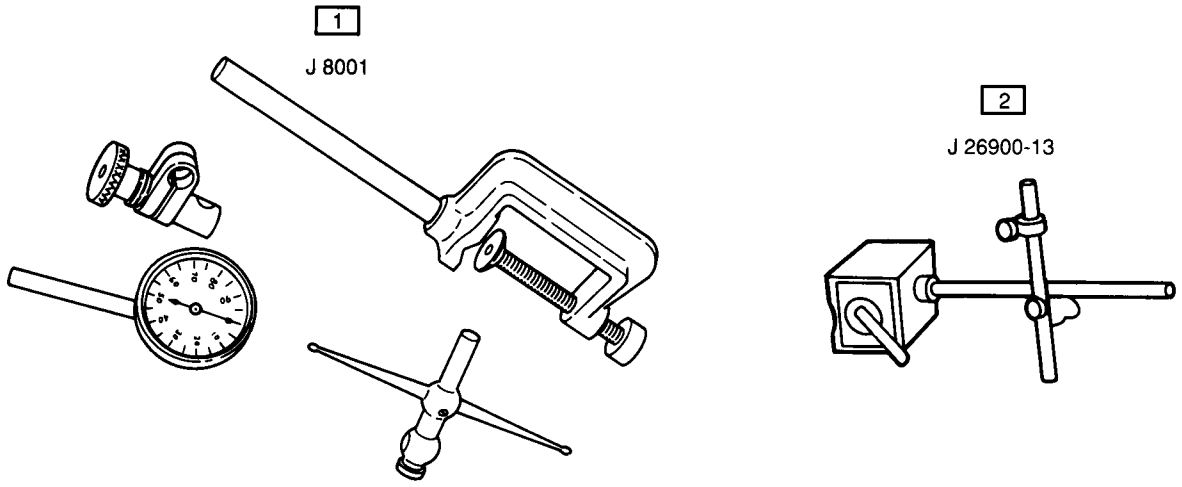

1 DIAL INDICATOR SET
2 MAGNETIC BASE

NC3002-3-M-RS

SECTION 3A

WHEEL ALIGNMENT

NOTICE: When fasteners are removed, always reinstall them at the same location from which they were removed. If a fastener needs to be replaced, use the correct part number fastener for that application. If the correct part number fastener is not available, a fastener of equal size and strength (or stronger) may be used. Fasteners that are not reused, and those requiring thread-locking compound, will be called out. The correct torque values must be used when installing, fasteners that require them. If the above procedures are not followed, parts or system damage could result.

CONTENTS

Diagnosis 3A-1
General Description 3A-1
Caster 3A-1
Camber 3A-2
Toe 3A-2
Steering Angle 3A-2
Steering Axis Inclination 3A-2
Included Angle 3A-2
Scrub Radius 3A-2
Set Back 3A-2
Turning Angle 3A-2
Thrust Angle 3A-3
Preliminary Inspections 3A-3
On-Vehicle Service 3A-4
Measuring Front Alignment Angles 3A-4
Front Camber and Caster 3A-4
Front Toe 3A-4
Specifications 3A-5
Fastener Torques 3A-5
Alignment Specifications 3A-5
Special Tools 3A-5

DIAGNOSIS

For steering and wheel alignment diagnosis procedures, refer to SECTION 3.

GENERAL DESCRIPTION

Wheel alignment refers to the angular relationship between the front wheels, the front suspension attaching parts, and the ground. Generally, the only adjustment required for front alignment is toe setting. Camber and caster cannot be adjusted for this vehicle. Therefore, should camber or caster be out of specification due to the damage caused by hazardous road conditions or collision, the damaged components must be identified and replaced.

The angle of the knuckle away from vertical (when viewed from the front of the vehicle) and the tilt of the suspension members from vertical (when viewed from the side of the vehicle) are involved in alignment.

A complete wheel alignment check should be performed when a service check is deemed necessary. Complete wheel alignment includes the measurement of all four wheels. Such alignment assures that the four wheels will be running in precisely the same direction.

When the vehicle is geometrically in alignment, fuel economy and tire life are increased and steering and performance are maximized.

CASTER

Caster is the tilting of the upper most point of the steering axis either forward or backward from the vertical (when viewed from the side of the vehicle). A backward tilt is positive (+) and a forward tilt is negative (-). Caster influences directional control of the steering, but does not affect tire wear.

Caster is affected by vehicle height; therefore, it is important to keep the body at its designed height. Overloading the vehicle or a weak or sagging rear spring will affect the caster. When the rear of the vehicle is lower than its designated trim height, the front suspension moves to a more positive caster. If the rear of the vehicle is higher than its designated trim height, the front suspension moves to a less positive caster. Refer to "Alignment Specifications" at the end of this section for caster specifications.

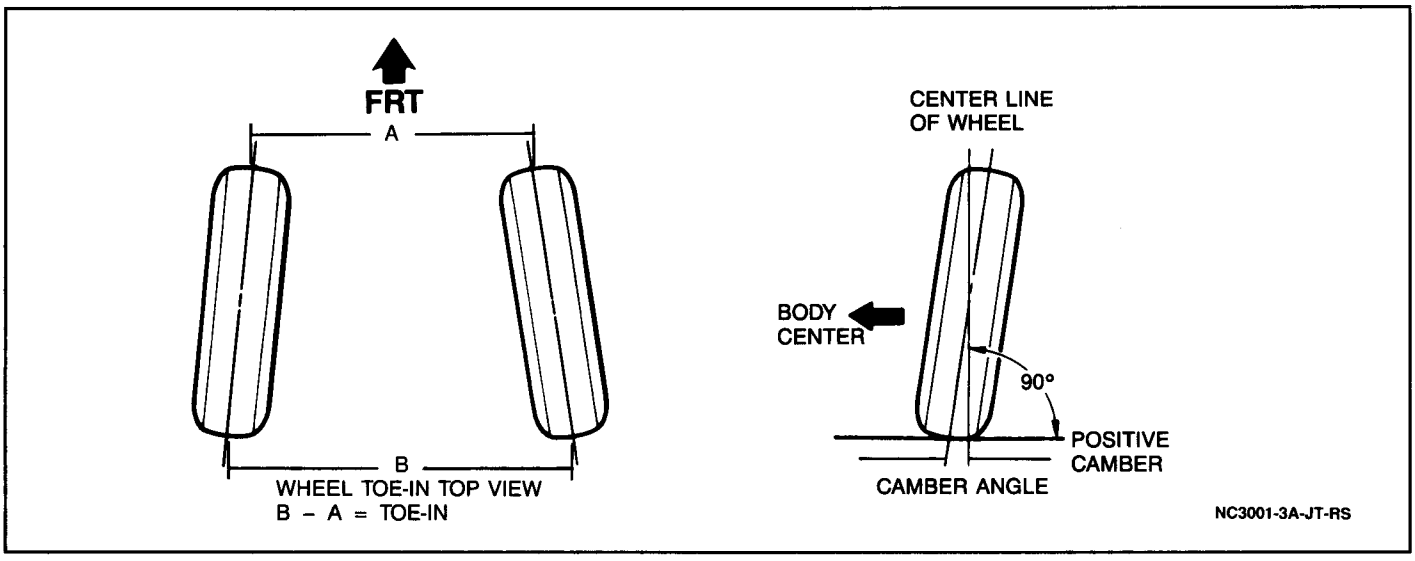

Figure 1 Wheel Alignment Angles

CAMBER

Figure 1

Camber is the tilting of the wheels from the vertical when viewed from the front of the vehicle. When the wheels tilt outward at the top, the camber is positive (+). When the wheels tilt inward, the camber is negative (-). The amount of tilt measured in degrees from the vertical is the camber angle. Camber influences both directional control and tire wear. Refer to "Alignment Specifications" at the end of this section for camber specifications.

TOE

Figures 1 and 2

Toe is a measurement of how much the front of the wheels are turned in or out from the geometric centerline. When the wheels are turned in (toe-in), toe is "positive" (+). When the wheels are turned out (toe-out), toe is "negative" (-). The actual amount of toe is normally only a fraction of a degree. The purpose of toe is to ensure that the wheels roll parallel.

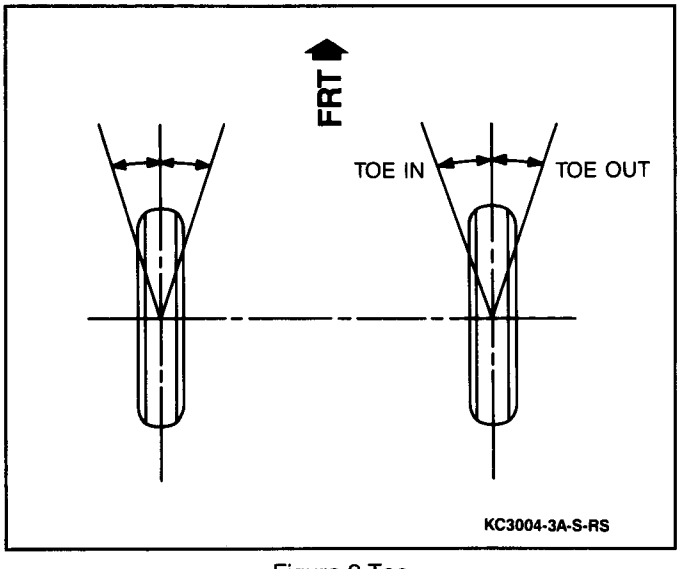

Figure 2 Toe

Toe also serves to offset the small deflections of the wheel support system which occurs when the vehicle is rolling forward. In other words, even when the wheels are set to toe in or out slightly when the vehicle is standing still, they tend to roll parallel on the road when the vehicle is moving. Toe also affects tire wear. Refer to "Alignment Specifications" at the end of this section for toe specifications.

STEERING ANGLE

Steering Axis Inclination

Steering axis inclination is the tilt (at the top) of the steering knuckle from vertical. It is the angle between true vertical and a line through the center of the strut and lower ball joint as viewed from the front of the vehicle.

Included Angle

The included angle is the angle measured from the camber angle to the line through the center of the strut and lower ball joint as viewed from the front of the vehicle.

Scrub Radius

The scrub radius is the distance between the line through the center of the strut and the lower ball joint to the road surface, and the actual 0 degree or true vertical.

Set Back

The set back is the distance in which one front wheel may be rearward of the other front wheel.

Turning Angle

Figure 3

The angle of each front wheel, when a vehicle makes a turn, is different. Each wheel is following an independent path, and requires its own angle. Check the turning angle with a commercially available turning radius gage. If the vehicle's turning angle is not correct, adjust the angle by changing the length of the pitman arm stopper bolts located on the vehicle frame (Figure 3).

Following turning angle adjustment, check front toe adjustment. Refer to "Front Toe Adjustment" later in this section.

Adjust

1. Inside steering angle to 32.5 degrees.
2. Outside steering angle to 30.5 degrees.

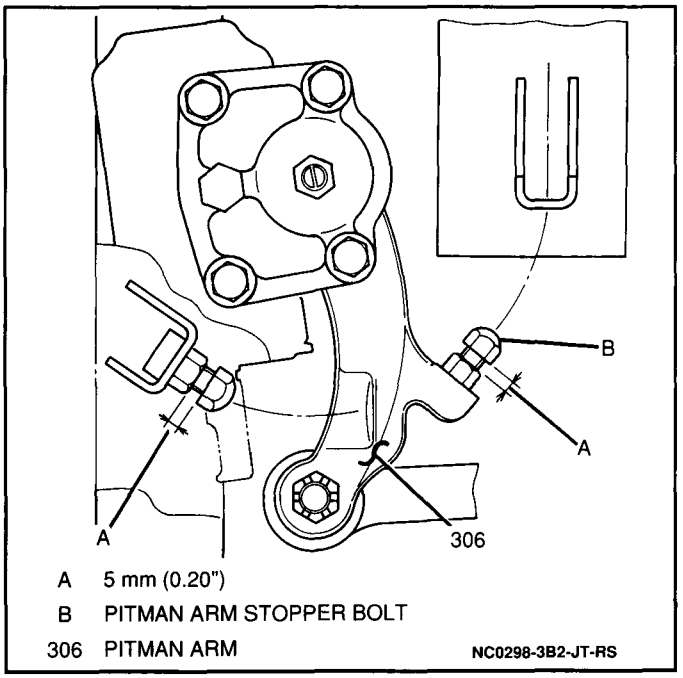

Figure 3 Steering Gear Pitman Arm

Thrust Angle

Figure 4

The front wheels aim or steer the vehicle, but the rear wheels control tracking. This tracking action is relative to thrust angle and rear wheel toe. Thrust angle is defined as the path that the rear wheels take. Ideally, the thrust angle is geometrically aligned with the body centerline.

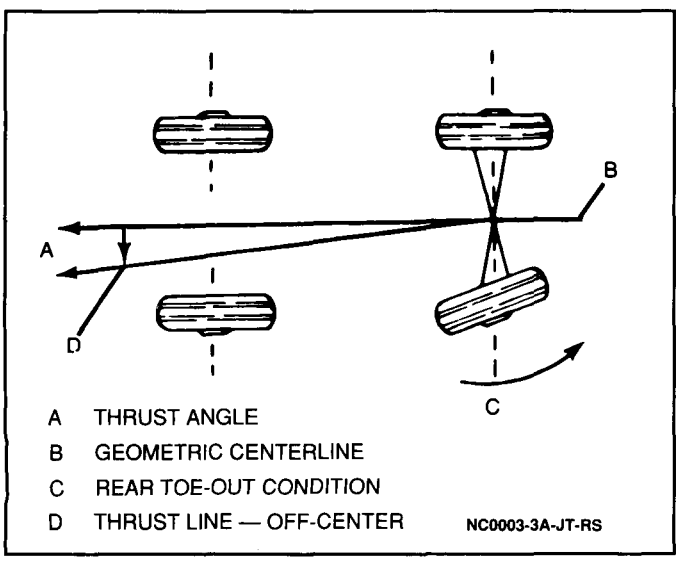

Figure 4 Thrust Angle

PRELIMINARY INSPECTIONS

Figure 5

Steering and vibration complaints are not always the result of improper alignment. They may also be caused by wheel and tire imbalance. An additional item to be checked, is the tire lead due to worn or defective tires. "Lead" is the deviation of the vehicle from a straight path on a level road without hand pressure on the steering wheel. For diagnostic information, refer to SECTION 3.

To ensure correct alignment readings and adjustments, the following inspections should be made before checking caster, camber or toe:

Inspect

Tools Required:
J 8001 Dial Indicator Set
J 26900-13 Magnetic Base

1. All tires for proper inflation pressures and approximately the same tread wear. Refer to SECTION 3E.
2. Wheel bearings for looseness. Refer to SECTION 3.
3. Ball joints and tie rod ends. If excessive looseness is noted, correct before adjusting. Refer to SECTION 3C and to SECTION 3.
4. Tie rods. If excessive looseness is noted, correct before adjusting.
5. Lateral runout of wheels and tires using a J 8001 and a J 26900-13.
   A. Raise front end of vehicle slightly off the ground. Refer to SECTION 0A.
   B. Position the J 8001 and the J26900-13 on the wheel (Figure 5).
   C. Rotate wheel and measure lateral runout.
      - Allowable lateral wheel runout: 1.20 mm (0.047-inch) or less.

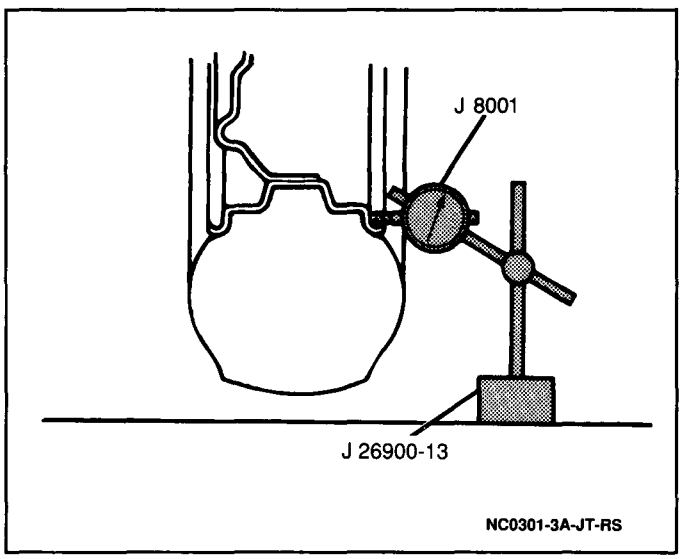

Figure 5 Checking Wheel Runout

6. Vehicle trim heights. Refer to SECTION 3. If heights are beyond the limits and a correction is to be made, the correction must be made before adjusting toe.
7. Steering gear mountings. Refer to SECTION 3B1 or SECTION 3B2.
8. Operation of struts. Refer to SECTION 3C.
9. Control arms for looseness. Refer to SECTION 3C.
10. Hub and bearing assemblies for excessive wear; correct if necessary. Refer to SECTION 3.

Important

- Consideration must be given to excessive loads. If an excessive load is normally carried in the vehicle, it should remain in the vehicle during alignment checks.
- Consider the condition of the equipment being used to check alignment, and follow the manufacturer's instructions.
- Regardless of equipment used to check alignment, the vehicle must be on a level surface.

ON-VEHICLE SERVICE

MEASURING FRONT ALIGNMENT ANGLES

Important

- Install alignment equipment following equipment manufacturer's instructions. Measure alignment angles and record the readings.
- Jounce front and rear bumpers three times to normalize suspension prior to measuring angles.
- If caster angles are not within the specified range, inspect for damaged suspension and steering components and replace parts as necessary. Refer to SECTION 3C.

Front Camber and Caster

Should camber or caster be found out of specifications upon inspection (camber -0.5 to 1.5 degrees and caster 0.5 to 2.5 degrees) locate its cause first. If this cause lies in damaged, loose, bent, dented or worn suspension parts, those parts should be replaced, refer to SECTION 3C. If the problem lies in the body, repair it to attain specifications; refer to SECTION 10-3. To prevent possible incorrect reading of camber or caster, vehicle front end must be moved up and down a few times (jounced) before inspection. Camber and caster cannot be adjusted on this vehicle.

Front Toe

Figure 6

Toe is adjusted by loosening locknuts and then rotating right and left tie rods by the same amount to bring total toe-in to 0.16 to 0.48 degrees (Figure 6). In this adjustment, right and left tie rods should become equal in length.

Tighten

- Tie rod locknuts to 65 N·m (48 lb.ft.).

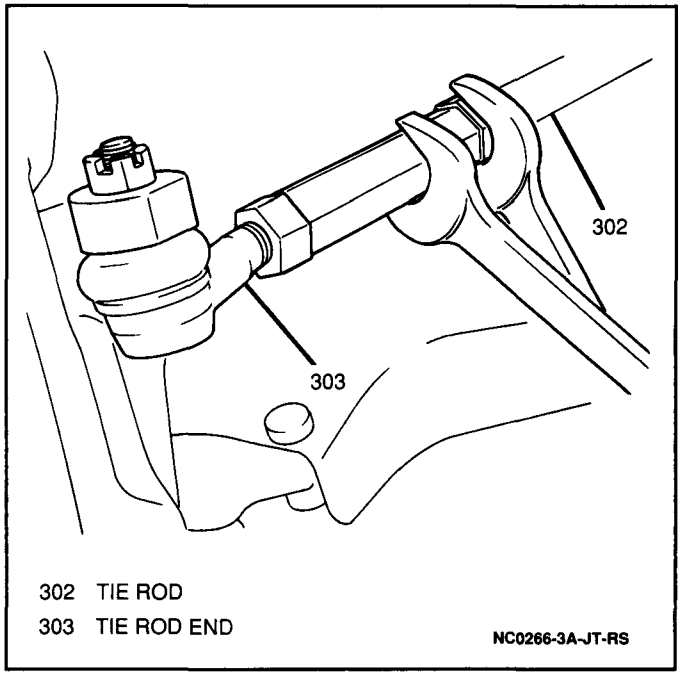

Figure 6 Adjusting Front Toe

SPECIFICATIONS

FASTENER TORQUES

Tie Rod Locknuts ..... 65 N·m (48 lb.ft.)

ALIGNMENT SPECIFICATIONS

Total Toe ..... 0.16 to 0.48 Degrees
Camber ..... -0.5 to 1.5 Degrees
Caster ..... 0.5 to 2.5 Degrees
Steering Angle:
Inside ..... 32.5 Degress
Outside ..... 30.5 Degress
Allowable Lateral Wheel Runout ..... 1.20 mm (0.047 in.)

SPECIAL TOOLS

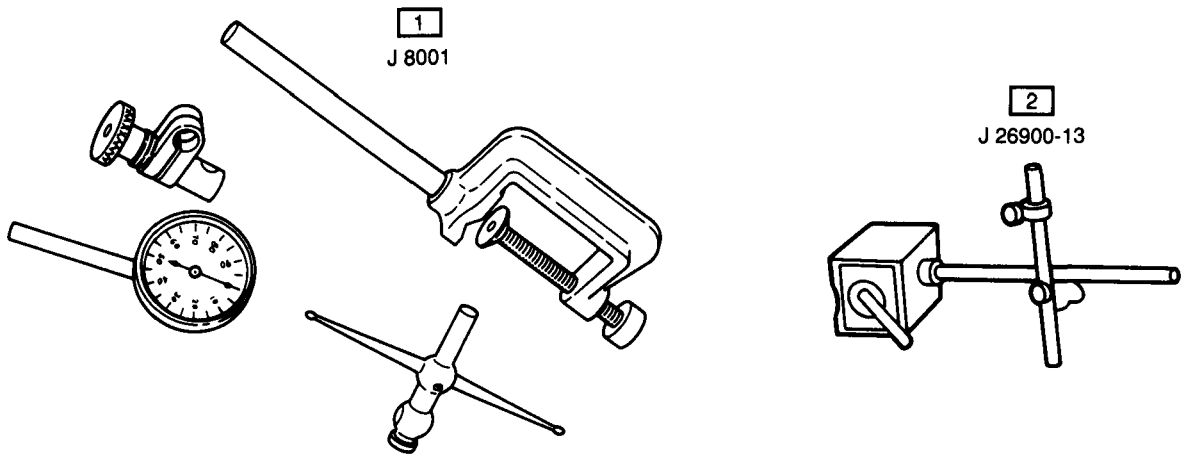

1 DIAL INDICATOR SET
2 MAGNETIC BASE

MC3002-3-M-RS

SECTION 3B1

POWER STEERING GEAR AND PUMP

NOTICE: When fasteners are removed, always reinstall them at the same location from which they were removed. If a fastener needs to be replaced, use the correct part number fastener for that application. If the correct part number fastener is not available, a fastener of equal size and strength (or stronger) may be used. Fasteners that are not reused, and those requiring thread-locking compound, will be called out. The correct torque values must be used when installing fasteners that require them. If the above procedures are not followed, parts or system damage could result.

CONTENTS

Diagnosis 3B1-1
General Description 3B1-1
Power Steering Gear 3B1-2
Power Steering Pump 3B1-3
On-Vehicle Service 3B1-4
Checking and Adding Fluid 3B1-4
Bleeding System 3B1-4
Power Steering Pump Drive Belt Tension Adjustment 3B1-4
Power Steering Gear 3B1-5
Power Steering Pump 3B1-7
Unit Repair 3B1-8
Power Steering Pump 3B1-8
Specifications 3B1-9
Fastener Torques 3B1-9
Power Steering Pump Drive Belt Deflection . 3B1-9
Service Parts Information 3B1-9
Special Tools 3B1-9

DIAGNOSIS

For power steering gear and pump diagnostic information, refer to SECTION 3.

GENERAL DESCRIPTION

The power steering system (Figure 1) in this vehicle reduces the driver's effort needed in turning the steering wheel by utilizing the hydraulic pressure generated by the power steering pump, which is driven by an engine drive belt.

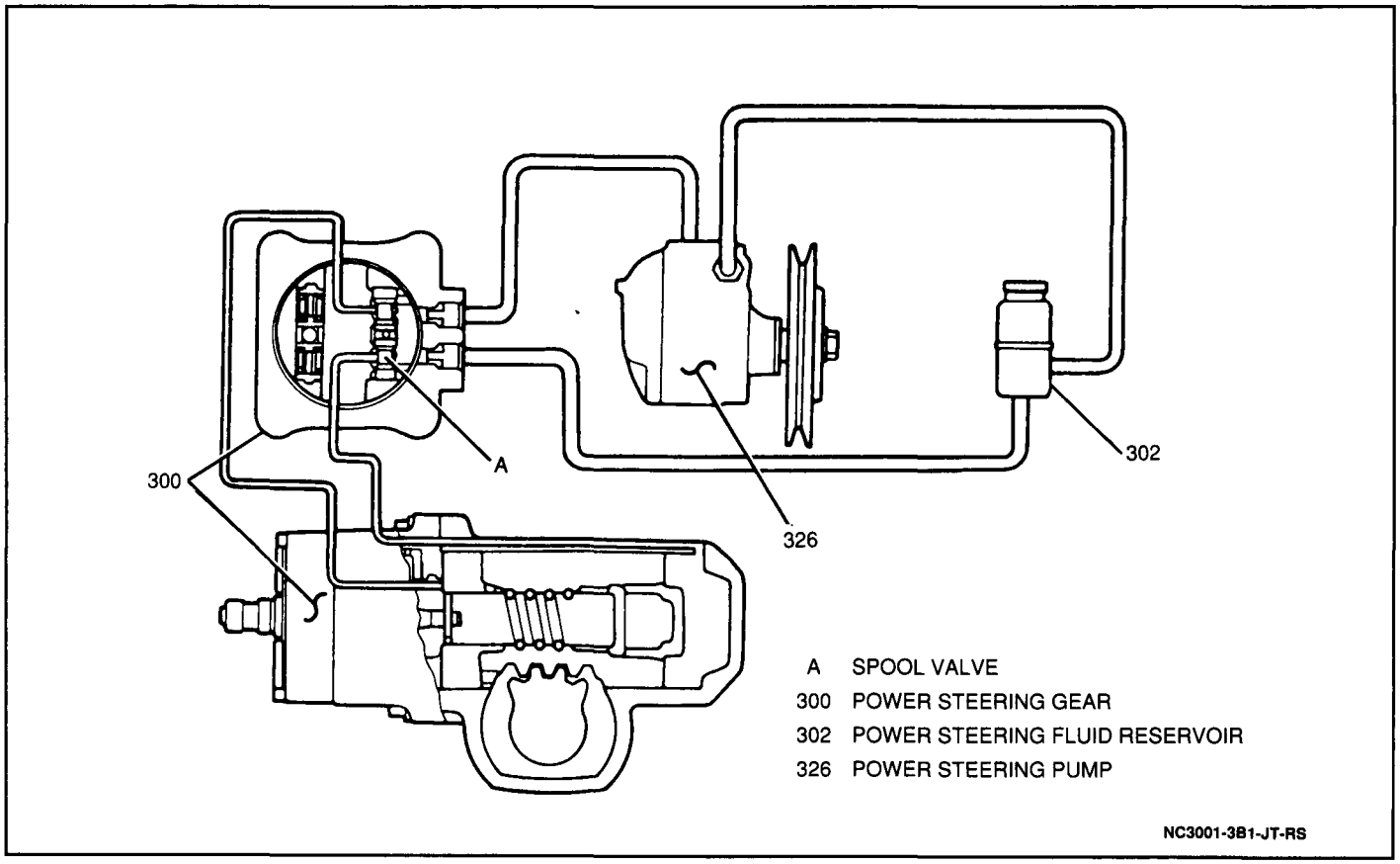

Figure 1 Power Steering System Circuit

POWER STEERING GEAR

Figure 2

The input shaft in the steering gear has a torsion bar which connects the input shaft and the main shaft. As the steering wheel is turned, the input shaft turns, moving the spool valve according to how much the steering wheel is turned. This valve movement allows fluid to flow so that hydraulic pressure is applied to the piston, providing assistance to the steering effort.

When the steering wheel is in the straight-ahead position, the spool valve does not operate and the power steering fluid flows from the power steering pump through the short-circuit back to the oil tank.

When the steering wheel is turned to the right, the input shaft pushes the spool valve to the right, allowing hydraulic pressure to be applied to the right side of the cylinder.

When the steering wheel is turned the the left, the input shaft pushes the spool valve to the left to allow the hydraulic pressure to be applied to the left side of the cylinder.

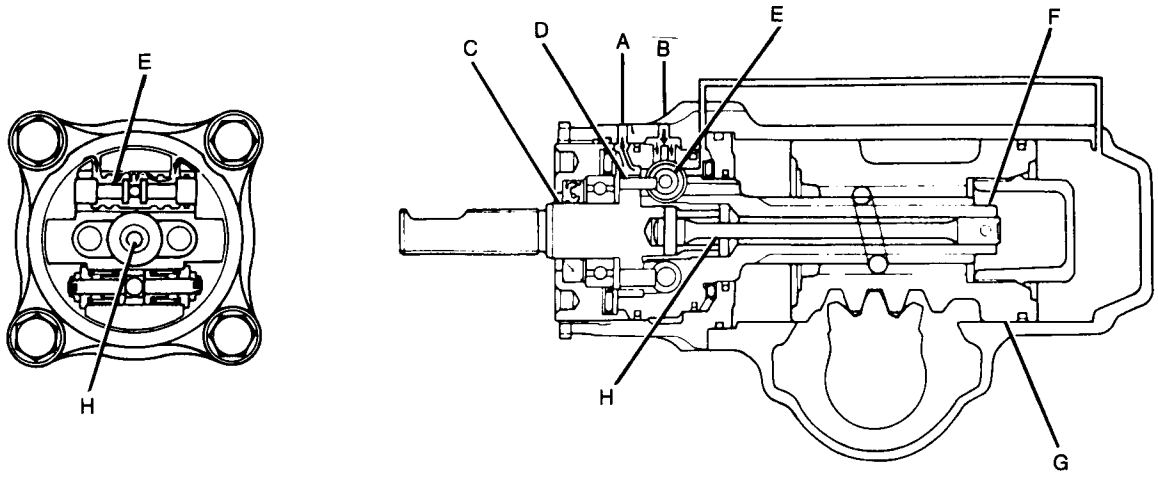

A	POWER STEERING FLUID OUTLET	E	SPOOL VALVE
B	POWER STEERING FLUID INLET	F	MAIN SHAFT
C	INPUT SHAFT	G	PISTON
D	SPOOL VALVE PIN	H	TORSION BAR

NC3002-3B1-JT-RS

Figure 2 Power Steering Gear

POWER STEERING PUMP

Figure 3

The power steering pump is a vane-type pump and is driven by the V-ribbed belt from the crankshaft pulley.

As the discharge rate of the power steering pump increases in proportion to the pump revolution speed, a flow control valve is utilized to control the maximum amount of fluid needed for steering operation. Within the flow control valve is a pressure relief valve which controls the maximum amount of pressure supplied to the power steering gear.

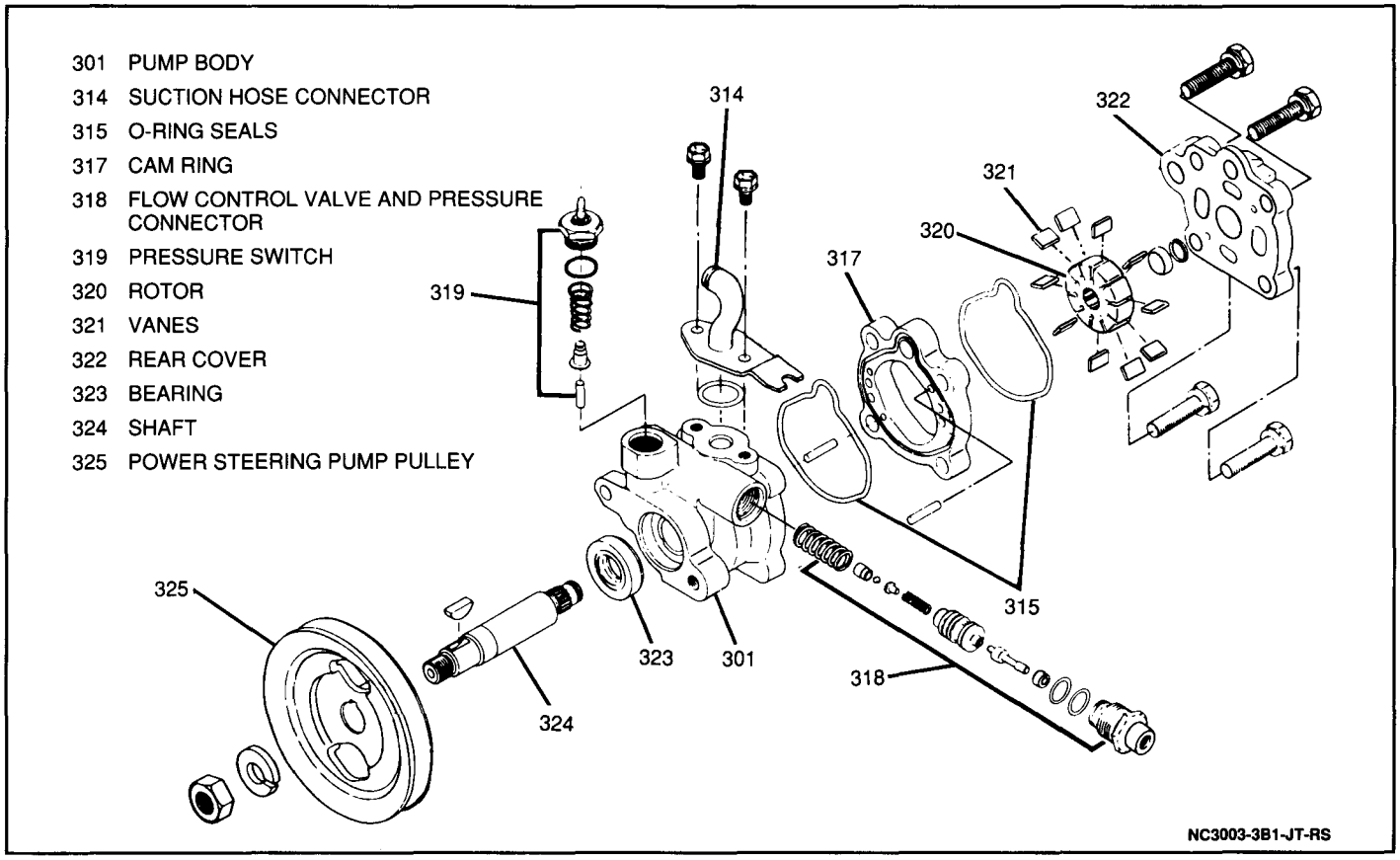

Figure 3 Power Steering Pump Assembly

ON-VEHICLE SERVICE

CHECKING AND ADDING FLUID

The remote power steering fluid reservoir is located at the left front corner of the engine compartment.

1. Remove the reservoir cap and check fluid level on the cap fluid level indicator (dipstick).
2. If the fluid does not reach the "MAX" mark on the indicator, add power steering gear and pump fluid GM P/N 1050017, or equivalent.

BLEEDING SYSTEM

If the power steering hydraulic system has been serviced, an accurate fluid level reading may not be obtained until air is bled from the system. Follow these steps to bleed air:

NOTICE: When adding fluid or making a complete fluid change, use power steering gear and pump fluid GM P/N 1050017, or equivalent. Failure to use the proper fluid could cause hose and seal damage and fluid leaks.

1. With wheels turned all the way to the left, stop engine. Add power steering gear and pump fluid GM P/N 1050017, or equivalent to the power steering fluid reservoir until it reaches the "COLD" mark on the fluid level indicator. Leave the cap off of the reservoir during bleeding procedure.
2. Start engine, run at fast idle for about 15 seconds. Stop engine, recheck the fluid level. If necessary, add fluid to bring the level to the "COLD" mark again.
3. Start engine and bleed system by turning wheels from side to side three or four times. Stop engine and check fluid and color and level in the reservoir. Fluid with air has a light tan appearance. This air must be eliminated from the system fluid before normal steering action can be obtained. Repeat above steps until fluid is purged of air and the power steering fluid appears red in color.
4. Install cap to power steering fluid reservoir.

POWER STEERING PUMP DRIVE BELT TENSION ADJUSTMENT

Figure 4

On vehicles equipped with air conditioning, adjust the power steering pump/air conditioner compressor drive belt by positioning the compressor along its upper mounting bracket. On vehicles without air conditioning, adjust the power steering pump drive belt by positioning the power steering pump in its mounting bracket (Figure 4).

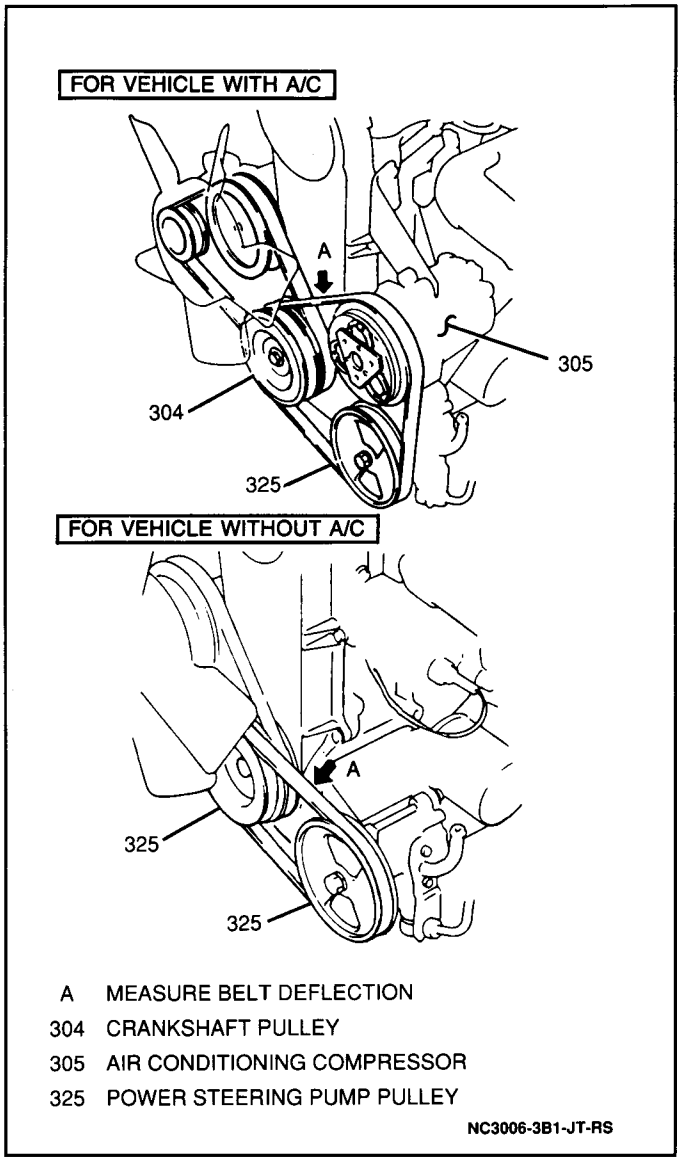

Figure 4 Drive Belt Tension

Measure

- Power steering pump drive belt deflection using thumb pressure (approximately 10 kg {22 lbs.}). A properly adjusted drive belt should deflect 6 to 9 mm (0.24 to 0.35-inch). If drive belt tension is not within specification, loosen mounting bolts and reposition the power steering pump or the air conditioner compressor, if equipped.

Tighten

- Power steering pump mounting bolts to 30 N·m (22 lb.ft.).
- Air conditioner compressor mounting bolts:
  - 8 mm bolts to 28 N·m (21 lb.ft.).
  - 10 mm bolts to 45 N·m (33 lb.ft.).

POWER STEERING GEAR

Figures 5 through 8

Remove or Disconnect

Tool Required:
J 29107 Pitman Arm Puller

1. Pressure hose from steering gear (one union bolt).
2. Return hose from steering gear (one hose clamp).

Important

- Plug power steering hoses to keep fluid from escaping.

- Raise and suitably support vehicle. Refer to SECTION 0A.

3. Engine skid plate, if equipped (four bolts).
4. Mounting screws and splash shield from left inner wheel well.
5. Cotter pin and castle nut from center link ball joint.

- Separate pitman arm from center link using a J 29107 (Figure 5).

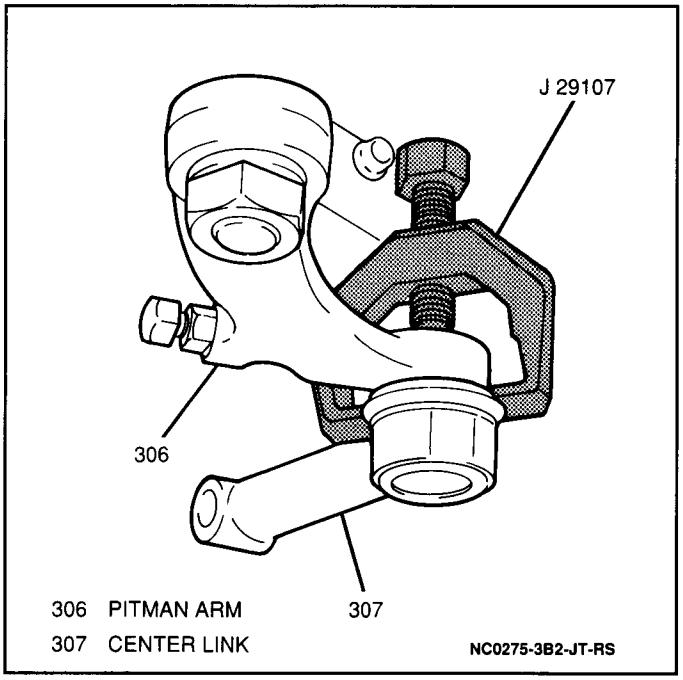

Figure 5 Separating Pitman Arm From Center Link

6. Lower steering shaft from power steering gear by removing pinch bolt (Figure 6).
7. Two power steering gear mounting and one pilot bolt, removing steering gear from vehicle.

- Mount steering gear in a table vise and remove sector shaft nut and pitman arm from steering gear.

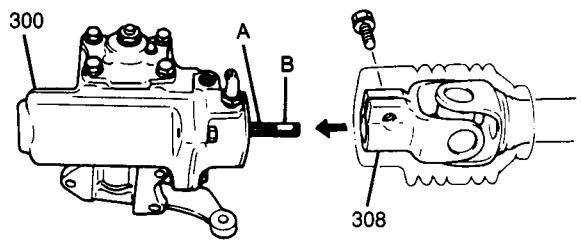

A INPUT SHAFT
B ALIGNMENT
300 POWER STEERING GEAR
308 LOWER STEERING COLUMN SHAFT

NC3011-3B1-JT-RS

Figure 6 Lower Steering Shaft-to-Steering Gear Coupling

Install or Connect

1. Pitman arm to power steering gear; secure with sector nut. Align matchmarks on sector shaft and pitman arm. Do not fully tighten sector nut at this time (Figure 7).

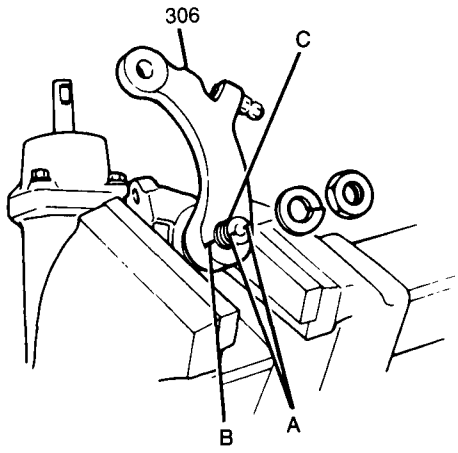

A SECTOR SHAFT MATCH MARKS
B PITMAN ARM MATCH MARK
C SECTOR SHAFT
306 PITMAN ARM

NC3010-3B1-JT-RS

Figure 7 Installing Pitman Arm

2. Power steering gear to vehicle; secure with two mounting and one pilot bolt (Figure 8).

Tighten

- Power steering gear mounting and pilot bolts to 100 N·m (72 lb.ft.).
- Pitman arm sector shaft nut fully at this time to 130 N·m (95 lb.ft.).

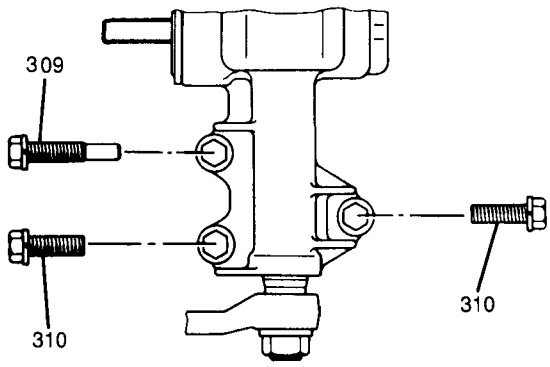

309 PILOT BOLT
310 MOUNTING BOLTS

NC3012-3B1-JT-RS

Figure 8 Steering Gear Mounting Bolts

3. Lower steering shaft to steering gear, aligning shaft flats at the coupling. Secure with pinch bolt (Figure 7).
4. Pitman arm to center link; secure with castle nut.

Tighten

- Center link-to-pitman arm castle nut to 55 N·m (40 lb.ft.).

5. Cotter pin to center link.
6. Splash shield to left inner wheel well; secure with screws.
7. Engine skid plate, if equipped; secure with four bolts.

Tighten

- Engine skid plate bolts to 27 N·m (20 lb.ft.).

- Lower vehicle.
- Unplug power steering fluid hoses.

8. Return hose to steering gear; secure with one hose clamp.
9. Pressure hose to steering gear; secure with one union bolt.

Tighten

- Power steering gear pressure hose union bolt to 40 N·m(29 lb.ft.).

- Add fluid to and bleed power steering system. Refer to "Checking and Adding Fluid" and to "Bleeding System" earlier in this section.

POWER STEERING PUMP

Figures 9 and 10

Remove or Disconnect

1. Negative (-) battery cable.
2. Drive belt from power steering pump pulley:
   - If vehicle is equipped with air conditioning, loosen the compressor mounting bolts.
   - If vehicle is not equipped with air conditioning, loosen the power steering pump mounting bolts.

- Raise and suitably support vehicle. Refer to SECTION 0A.

3. Engine skid plate, if equipped (four bolts).
4. Pressure hose from power steering pump by removing one union bolt (Figure 9).

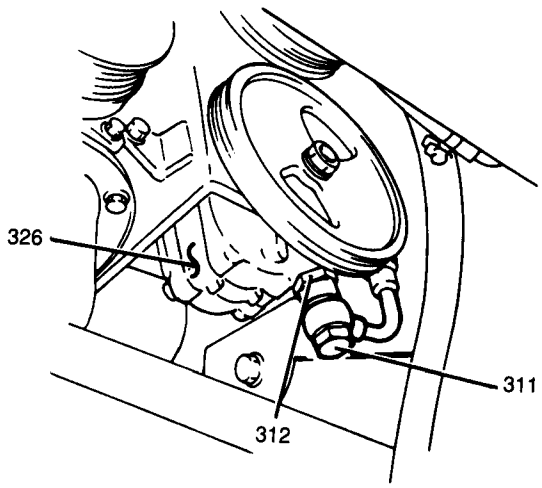

311 UNION BOLT AND GASKETS
312 PRESSURE CONNECTOR
326 POWER STEERING PUMP
NC3013-3B1-JT-RS

Figure 9 Power Steering Pump Pressure Hose

5. Suction hose from power steering pump by loosening one hose clamp (Figure 10).
6. Electrical connector from power steering pump pressure switch (Figure 10).
7. Engine oil filter. Catch any escaping oil in a drain pan.
8. Mounting bolts from power steering pump and bracket, remove pump from vehicle.

Install or Connect

1. Power steering pump to mounting bracket; secure with mounting bolts. Do not fully tighten bolts at this time.
2. Engine oil filter.
3. Electrical connector to pump pressure switch (Figure 10).

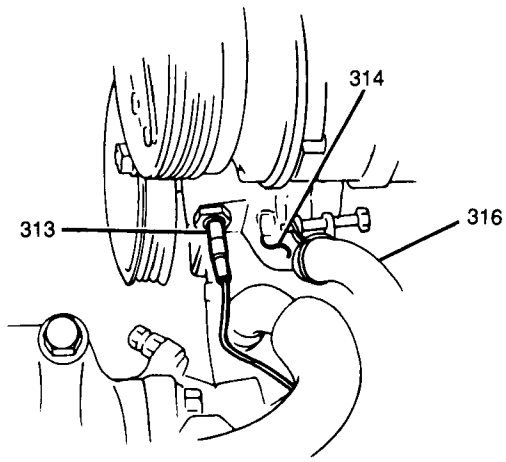

313 POWER STEERING PUMP PRESSURE SWITCH ELECTRICAL CONNECTOR
314 SUCTION HOSE CONNECTOR
316 SUCTION HOSE
NC3014-3B1-JT-RS

Figure 10 Power Steering Pump Suction Hose

4. Suction hose power steering pump; secure with one hose clamp (Figure 10).
5. Pressure hose to power steering pump; secure with one union bolt (Figure 9).

Tighten

- Power steering pump pressure hose union bolt to 40 N·m (29 lb.ft.).

6. Engine skid plate, if equipped; secure with four bolts.

Tighten

- Engine skid plate bolts to 27 N·m (20 lb.ft.).

- Lower vehicle.

7. Drive belt to power steering pump pulley.

Adjust

- Power steering pump drive belt tension. Refer to "Power Steering Pump Drive Belt Tension Adjustment" earlier in this section.

8. Negative (-) battery cable.

Tighten

- Negative (-) battery cable-to-negative (-) battery terminal retainer to 15 N·m (11 lb.ft.).

- Add fluid to and bleed power steering system. Refer to "Checking and Adding Fluid" and to "Bleeding System" earlier in this section.
- Check engine oil level and add oil if necessary. Refer to SECTION 0B.

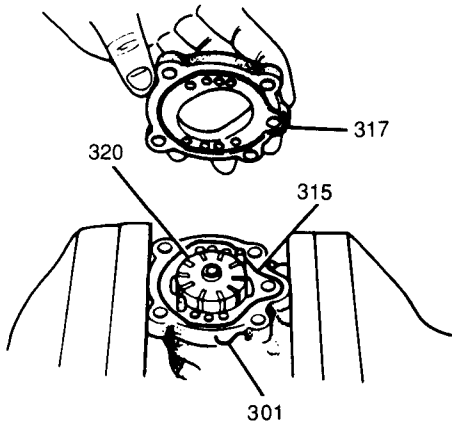

301 PUMP BODY
315 O-RING SEAL
317 CAM RING
320 ROTOR

NC3016-3B1-JT-RS

Figure 11 Removing Cam Ring From Power Steering Pump

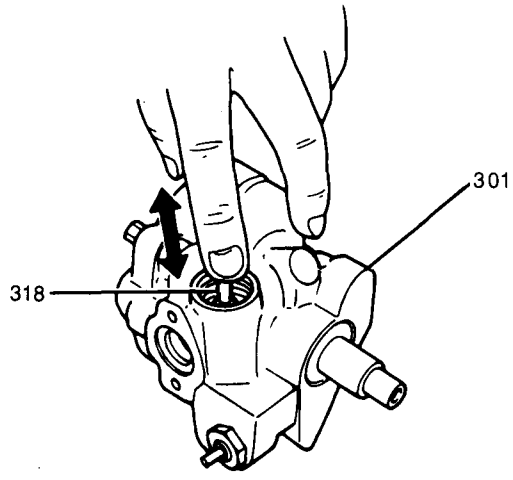

301 PUMP BODY
318 FLOW CONTROL VALVE

NC3019-3B1-JT-RS

Figure 12 Installing Flow Control Valve

UNIT REPAIR

POWER STEERING PUMP

Figures 3, 11 and 12

Remove or Disconnect

1. Power steering pump from vehicle. Refer to "Power Steering Pump" under "On-Vehicle Service" earlier in this section.
- Mount pump in a table vise.
2. Pulley from pump shaft by removing pulley retaining nut and washer.
3. Pressure switch from pump.
4. Suction hose connector from pump (two bolts).
5. Pressure connector and flow control valve from pump.
6. Rear pump cover, cam ring and O-ring seal from pump by removing four bolts (Figure 11).

Inspect

- Rotor and vanes for excessive wear.
- Power steering pump body for cracks or leaks.
- If excessive wear, cracks or leaks are present on pump body or any internal parts, the power steering pump must be replaced.

Install or Connect

Important

- Replace all old power steering pump O-ring seals with new ones from the power steering pump seal kit.
- Lubricate internal parts with power steering gear and pump fluid GM P/N 1050017, or equivalent.

1. Rear pump cover and cam ring and new O-ring seals to power steering pump; secure with four bolts (Figure 11).

Tighten

- Power steering pump rear cover/cam ring bolts to 22 N·m (17 lb.ft.).

2. Flow control valve and pressure connector to pump (Figure 12).

Tighten

- Power steering pump pressure connector to 60 N·m (43 lb.ft.).

3. Suction hose connector to pump; secure with two bolts.

Tighten

- Power steering pump suction hose connector bolts to 10 N·m (89 lb.in.).

4. Pressure switch to pump.

Tighten

- Power steering pump pressure switch to 30 N·m (22 lb.ft.).

5. Pulley to power steering pump shaft; secure with washer and retaining nut.

Tighten

- Power steering pump pulley retaining nut to 43 N·m (32 lb.ft.).

6. Power steering pump to vehicle. Refer to "Power Steering Pump" under "On-Vehicle Service" earlier in this section.

SPECIFICATIONS

FASTENER TORQUES

Power Steering Pump Mounting Bolts	30 N·m (22 lb.ft.)
Air Conditioning Compressor Mounting Bolts	
8 mm Bolts	28 N·m (21 lb.ft.)
10 mm Bolts	45 N·m (33 lb.ft.)
Power Steering Gear Mounting And Pilot Bolts	100 N·m (72 lb.ft.)
Pitman Arm Sector Shaft Nut	130 N·m (95 lb.ft.)
Center Link-To-Pitman Arm Castle Nut	55 N·m (40 lb.ft.)
Engine Skid Plate Bolts	27 N·m (20 lb.ft.)
Power Steering Gear Pressure Hose Union Bolt	40 N·m (29 lb.ft.)
Negative (-) Battery Cable-To-Negative (-) Battery Terminal Retainer	15 N·m (11 lb.ft.)
Power Steering Pump Rear Cover/Cam Ring Bolts	22 N·m (17 lb.ft.)
Power Steering Pump Pressure Connector	60 N·m (43 lb.ft.)
Power Steering Pump Suction Hose Connector Bolts	10 N·m (89 lb.in.)
Power Steering Pump Pressure Switch	30 N·m (22 lb.ft.)
Power Steering Pump Pulley Retaining Nut	43 N·m (32 lb.ft.)

POWER STEERING PUMP DRIVE BELT DEFLECTION

Under approximately 10 kg (22 lbs.) of pressure	6 – 9 mm (0.24 – 0.35 in.)

SERVICE PARTS INFORMATION

Component Name Used in Section 3B1	Reference Name in Service Parts Catalog	Group Number
Power Steering Pump	Pump Asm, Power Steering	6.605
Seal Kit	Seal Kit	6.609
Power Steering Pressure Hose.	Hose, Power Steering, Pressure	6.670
Power Steering Suction Hose..	Hose, Power Steering, Suction	6.671
Power Steering Gear	Box Asm, Power Steering Gear	6.508
Pitman Arm	Arm, Steering Gear Pitman	6.859

SPECIAL TOOLS

1

J 29107

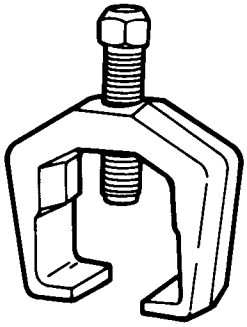

1 PITMAN ARM PULLER

PC3020-3B1-EJ-RS

SECTION 3B2

MANUAL STEERING GEAR

NOTICE: When fasteners are removed, always reinstall them at the same location from which they were removed. If a fastener needs to be replaced, use the correct part number fastener for that application. If the correct part number fastener is not available, a fastener of equal size and strength (or stronger) may be used. Fasteners that are not reused, and those requiring thread-locking compound, will be called out. The correct torque values must be used when installing fasteners that require them. If the above procedures are not followed, parts or system damage could result.

CONTENTS

Diagnosis 3B2-1
General Description 3B2-1
Manual Steering Gear 3B2-1
On-Vehicle Service 3B2-3
Manual Steering Gear 3B2-3
Tie Rod (Right or Left) 3B2-4
Tie Rod End (Right or Left) 3B2-5
Idler Arm 3B2-6
Pitman Arm 3B2-8
Steering Wheel Inspection 3B2-8
Manual Steering Gear Inspection 3B2-8
Oil Level 3B2-8
Adjusting Worm Shaft Preload Torque 3B2-9
Adjusting Steering Angle 3B2-10
Specifications 3B2-10
Fastener Torques 3B2-10
Steering Gear Specifications 3B2-11
Service Parts Information 3B2-11
Special Tools 3B2-11

DIAGNOSIS

For manual steering gear diagnostic information, refer to SECTION 3.

GENERAL DESCRIPTION

The rotary motion of the steering wheel is transferred through the steering upper shaft, lower shaft, steering gear and pitman arm. The pitman arm is attached to the center link and as the pitman arm rotates, the center link moves linearly, actuating the right and left tie rods and turning the wheels right or left through their knuckle arms. The steering system is designed for easy steering, high durability and excellent steering reaction, as well as reliable self-restoring action.

MANUAL STEERING GEAR

Figures 1 and 2

The pitman arm is rigidly connected to the outer end of the sector gear shaft. Between the ball nut and the worm shaft is a row of steel balls which serves two purposes: to provide rolling contact between the ball nut and worm shaft, and to keep the ball nut engaged with the worm shaft. With the nut prevented from turning, the rotation of the worm shaft causes the ball nut to move up or down the shaft.

The worm shaft is an extension of the steering shaft. As the steering wheel is turned, the steel balls roll along in the groove and the ball nut moves forward or rearward. A steel ball that has reached the end of the groove in the ball nut enters the return guide. This guide sends the ball back to the other end of the same groove, recirculating the steel balls (Figure 2).

The manual steering gear is not serviceable. Should any part of it require repair, the steering gear must be replaced.

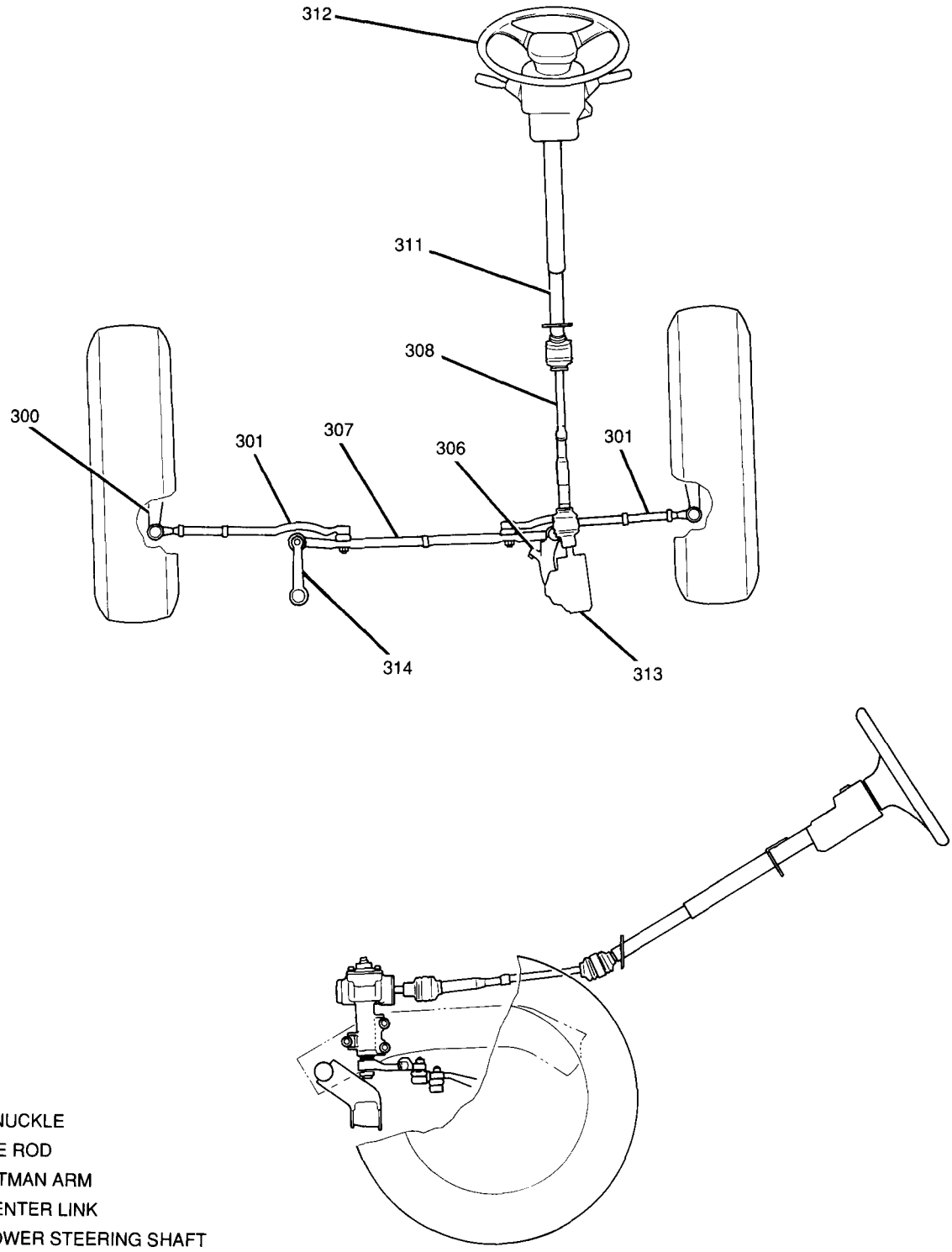

300 KNUCKLE
301 TIE ROD
306 PITMAN ARM
307 CENTER LINK
308 LOWER STEERING SHAFT
311 STEERING COLUMN
312 STEERING WHEEL
313 STEERING GEAR
314 IDLER ARM

NC3100-3B2-JT-RS

Figure 1 Manual Steering Gear and Linkage

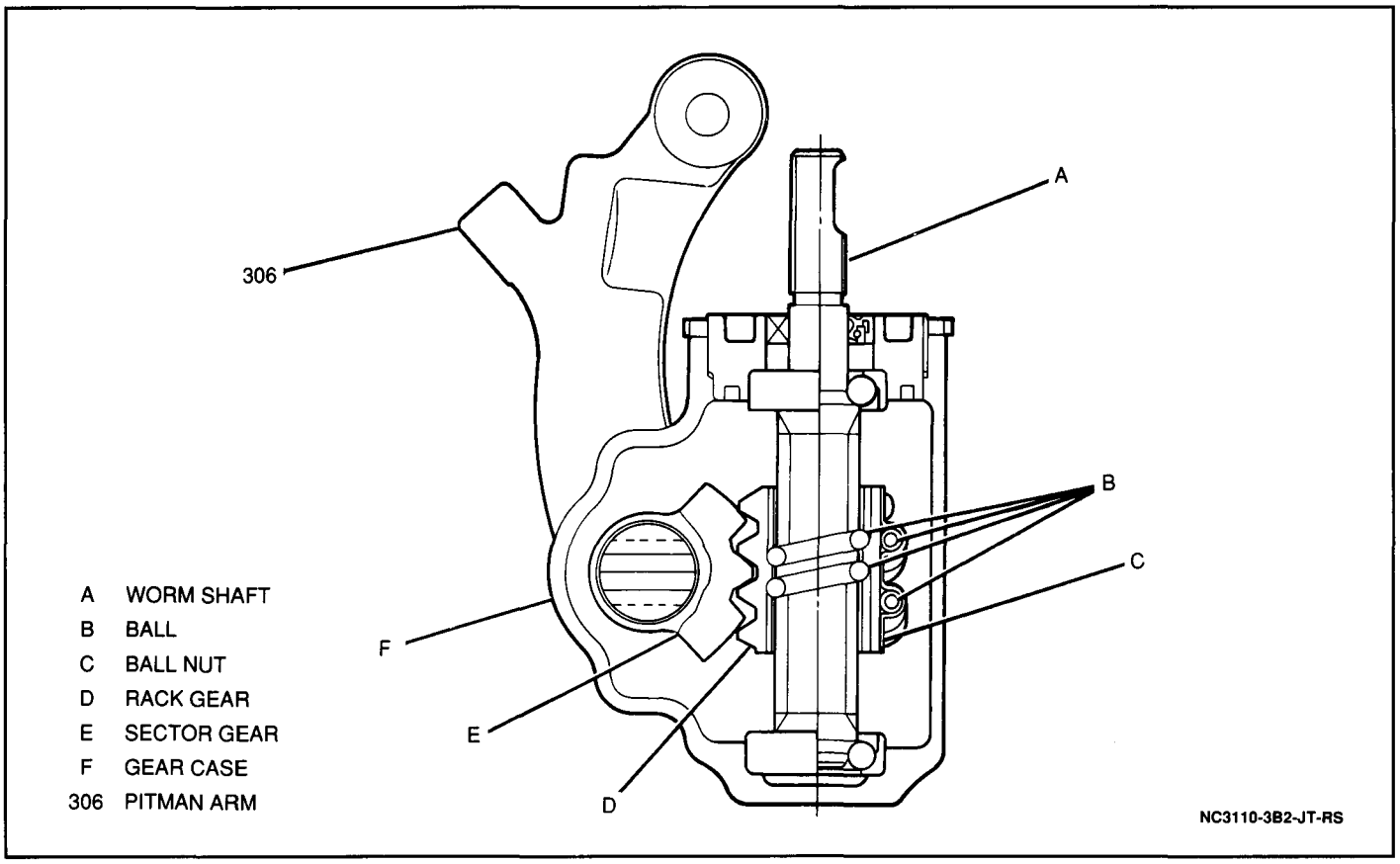

Figure 2 Manual Steering Gear — Sectional View

ON-VEHICLE SERVICE

MANUAL STEERING GEAR

Figures 3 through 6

Remove or Disconnect

Tool Required:
J 29107 Pitman Arm Puller

- Raise and suitably support vehicle. Refer to SECTION 0A.

1. Engine skid plate, if equipped (four bolts).
2. Mounting screws and splash shield from left inner wheel well.
3. Cotter pin and castle nut from center link ball joint.

- Separate pitman arm from center link using a J 29107 (Figure 3).

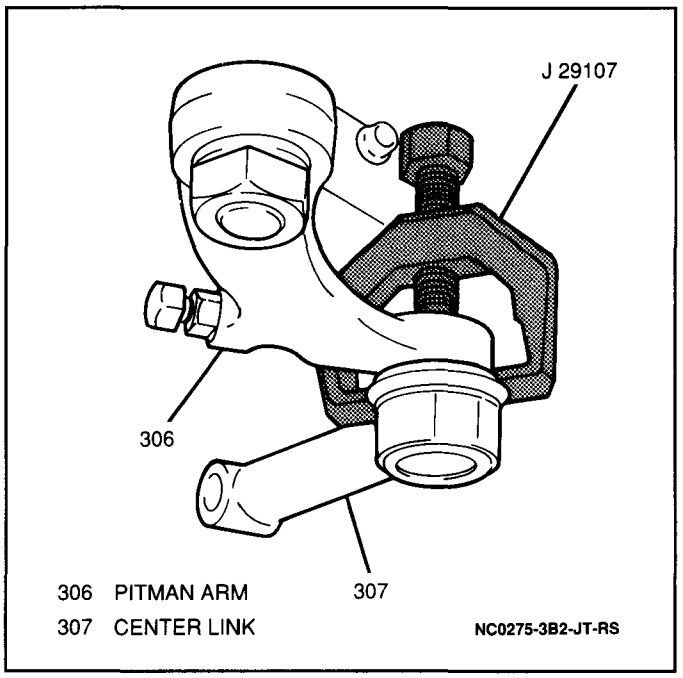

Figure 3 Separating Pitman Arm From Center Link

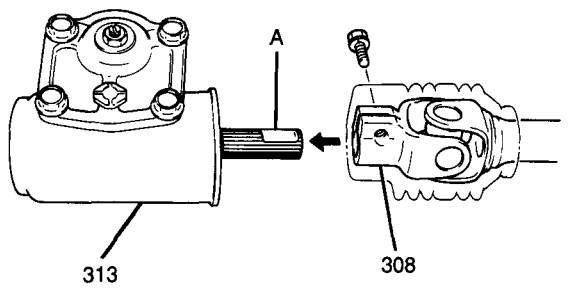

A FLAT AREA OF WORM SHAFT
308 LOWER STEERING SHAFT
313 STEERING GEAR
NC0277-3B2-JT-RS

Figure 4 Lower Steering Shaft-to-Steering Gear Coupling

4. Lower steering shaft from manual steering gear by removing pinch bolt (Figure 4).
5. Three manual steering gear mounting bolts and remove steering gear from vehicle.
- Mount steering gear in a table vise and remove sector shaft nut and pitman arm from steering gear.

Install or Connect

1. Pitman arm to manual steering gear; secure with sector shaft nut. Align matchmarks on sector shaft and pitman arm. Do not fully tighten sector nut at this time (Figure 5).

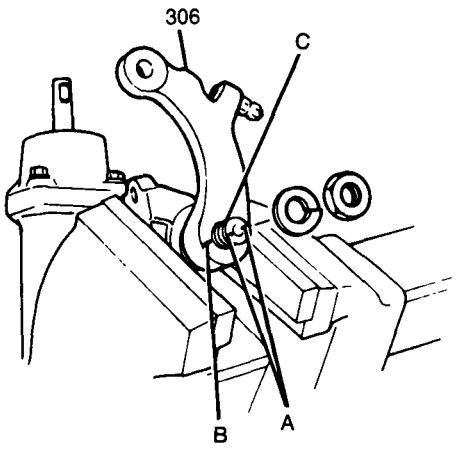

A SECTOR SHAFT MATCH MARKS
B PITMAN ARM MATCH MARK
C SECTOR SHAFT
306 PITMAN ARM
NC3010-3B1-JT-RS

Figure 5 Installing Pitman Arm

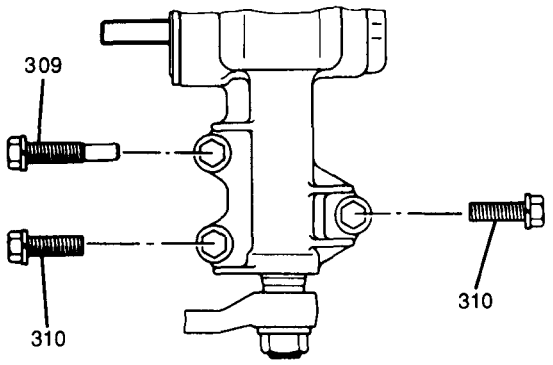

309 PILOT BOLT
310 MOUNTING BOLTS
NC3012-3B1-JT-RS

Figure 6 Steering Gear Mounting Bolts

2. Steering gear to vehicle; secure with two mounting and one pilot bolt (Figure 6).

Tighten

- Manual steering gear mounting and pilot bolts to 100 N·m (72 lb.ft.).
- Pitman arm sector shaft nut fully at this time to 130 N·m (95 lb.ft.).

3. Lower steering shaft to steering gear, aligning shaft flats at the coupling. Secure with pinch bolt (Figure 4).
4. Pitman arm to center link; secure with castle nut.

Tighten

- Center link-to-pitman arm castle nut to 55 N·m (40 lb.ft.).

5. Cotter pin to center link. Bend end of pin following installation.
6. Splash shield to left inner wheel well; secure with screws.
7. Engine skid plate, if equipped; secure with four bolts.

Tighten

- Engine skid plate bolts to 27 N·m (20 lb.ft.).

- Lower vehicle.

TIE ROD (RIGHT OR LEFT)

Figures 1 and 7

Remove or Disconnect

Tool Required:
J 21687-02 Tie Rod End Remover

- Raise and suitably support vehicle. Refer to SECTION 0A.

1. Engine skid plate, if equipped (four bolts).
2. Cotter pin and castle nut securing tie rod to center link.

3. Tie rod from center link using a J 21687-02.
- Loosen tie rod locknut at connector sleeve (Figure 7).

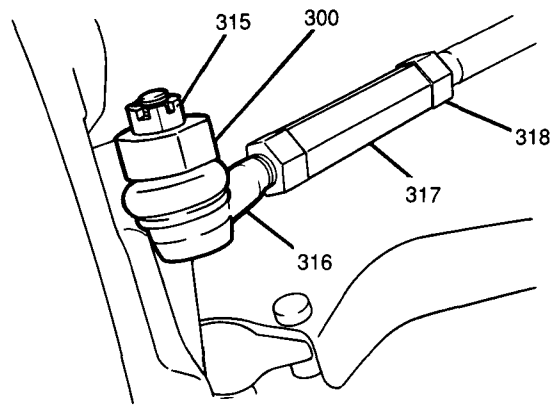

300 STEERING KNUCKLE
315 CASTLE NUT
316 TIE ROD END
317 TIE ROD CONNECTOR SLEEVE
318 TIE ROD LOCKNUT
NC0279-3B2-JT-RS

Figure 7 Tie Rod Connector Sleeve

4. Tie rod from connector sleeve and tie rod end.
5. Locknut from tie rod.

Inspect

- Tie rod dust seal for perforation or excessive wear. Replace the seal if these conditions exist.

Install or Connect

1. Locknut to tie rod.
- Thread tie rod into connector sleeve and tie rod end.
2. Tie rod to center link; secure with castle nut.

Tighten

- Tie rod castle nut to 45 N·m (33 lb.ft.).
- Tie rod locknut to 65 N·m (48 lb.ft.).

3. Cotter pin to tie rod shaft. Bend end of pin following installation.

Inspect

- For proper toe adjustment. Refer to SECTION 3A.

4. Engine skid plate, if equipped; secure with four bolts.

Tighten

- Skid plate bolts to 27 N·m (20 lb.ft.).

- Lower vehicle.

TIE ROD END (RIGHT OR LEFT)

Figures 8 through 11

Remove or Disconnect

Tool Required:
J 21687-02 Tie Rod End Remover

- Raise and suitably support vehicle. Refer to SECTION 0A.
1. Wheel from vehicle. Refer to SECTION 3E.
2. Cotter pin and castle nut from tie rod end.
- Separate tie rod end from steering knuckle using a J 21687-02 (Figure 8).

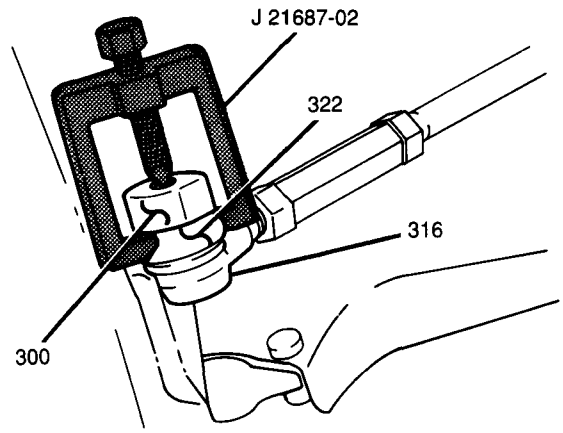

300 STEERING KNUCKLE
316 TIE ROD END
322 TIE ROD END DUST SEAL
NC0280-3B2-JT-RS

Figure 8 Separating Tie Rod End From Steering Knuckle

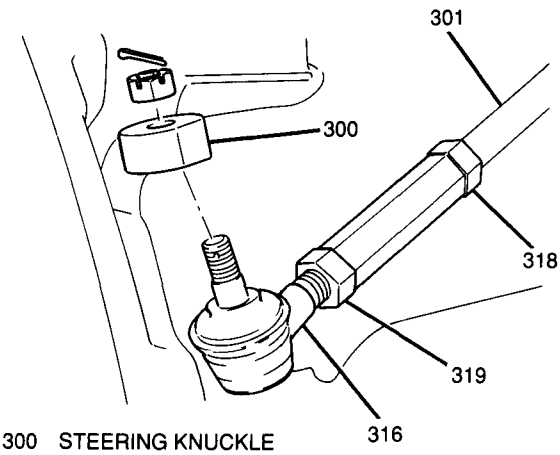

300 STEERING KNUCKLE
301 TIE ROD
316 TIE ROD END
318 TIE ROD LOCKNUT
319 TIE ROD END LOCKNUT
NC0281-3B2-JT-RS

Figure 9 Tie Rod End

Important

- For ease of adjustment after installation, mark the position of the tie rod end locknut on the tie rod thread.

- Loosen tie rod end locknut (Figure 9).

3. Tie rod end from tie rod connector sleeve (Figure 9).

Inspect

- Tie rod end dust seal for perforation or excessive wear. Replace the seal if these conditions exist.

Install or Connect

1. Tie rod end and locknut to tie rod connector sleeve (Figure 10).

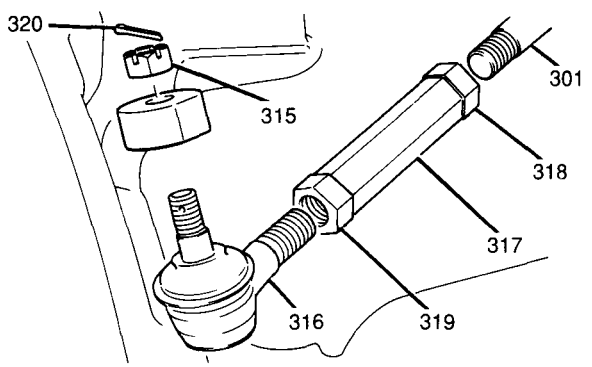

301 TIE ROD
315 CASTLE NUT
316 TIE ROD END
317 TIE ROD CONNECTOR SLEEVE
318 TIE ROD LOCKNUT
319 TIE ROD END LOCKNUT
320 COTTER PIN
NC0282-3B2-JT-RS

Figure 10 Installing Tie Rod End

- Align the marks (made during the removal procedure) denoting the position of the tie rod end locknut with the tie rod thread.

2. Tie rod end to steering knuckle; secure with castle nut.

Tighten

- Tie rod end castle nut to 45 N·m (33 lb.ft.).

3. Cotter pin to tie rod end. Bend end of pin following installation.

Inspect

- For proper toe adjustment. Refer to SECTION 3A.

Tighten

- Tie rod end locknut to 65 N·m (48 lb.ft.) (Figure 11).

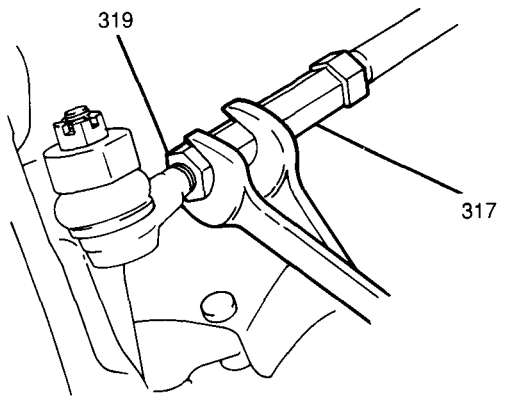

317 TIE ROD CONNECTOR SLEEVE
319 TIE ROD END LOCKNUT
NC3002-3B2-JT-RS

Figure 11 Tightening Tie Rod End

4. Wheel to vehicle. Refer to SECTION 3E.

- Lower vehicle.

IDLER ARM

Figures 12 through 15

Remove or Disconnect

Tool Required:
J 21687-02 Tie Rod End Remover

- Raise and suitably support vehicle. Refer to SECTION 0A.

1. Cotter pin and idler arm castle nut from center link (Figure 12).

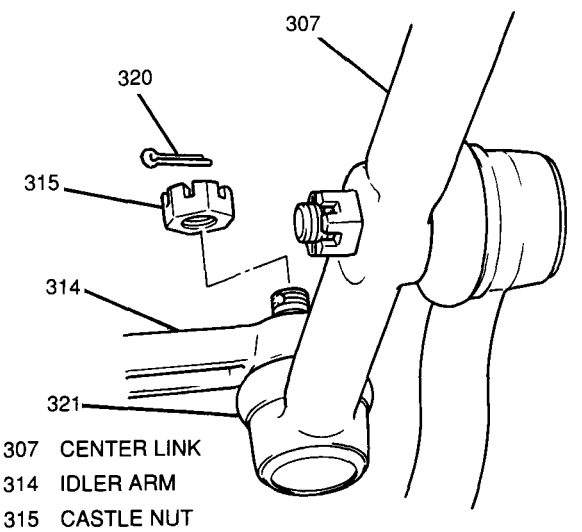

307 CENTER LINK
314 IDLER ARM
315 CASTLE NUT
320 COTTER PIN
321 IDLER ARM DUST SEAL
NC0285-3B2-JT-RS

Figure 12 Idler Arm Castle Nut

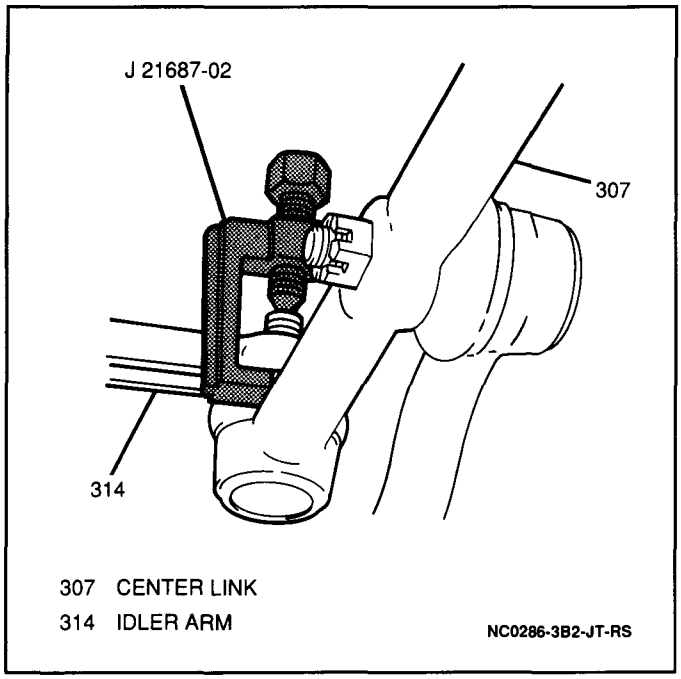

Figure 13 Separating Idler Arm From Center Link

2. Idler arm from center link, using a J 21687-02 (Figure 13).
3. Idler arm nut, two lower washers, idler arm and upper washer from mounting bracket shaft.

Inspect

- Idler arm dust seal for perforation or excessive wear. Replace the seal if these conditions exist.

Install or Connect

1. Upper washer, idler arm and two lower washers to mounting bracket shaft; secure with nut (Figure 14).

Tighten

- Idler arm nut to 75 N·m (55 lb.ft.).

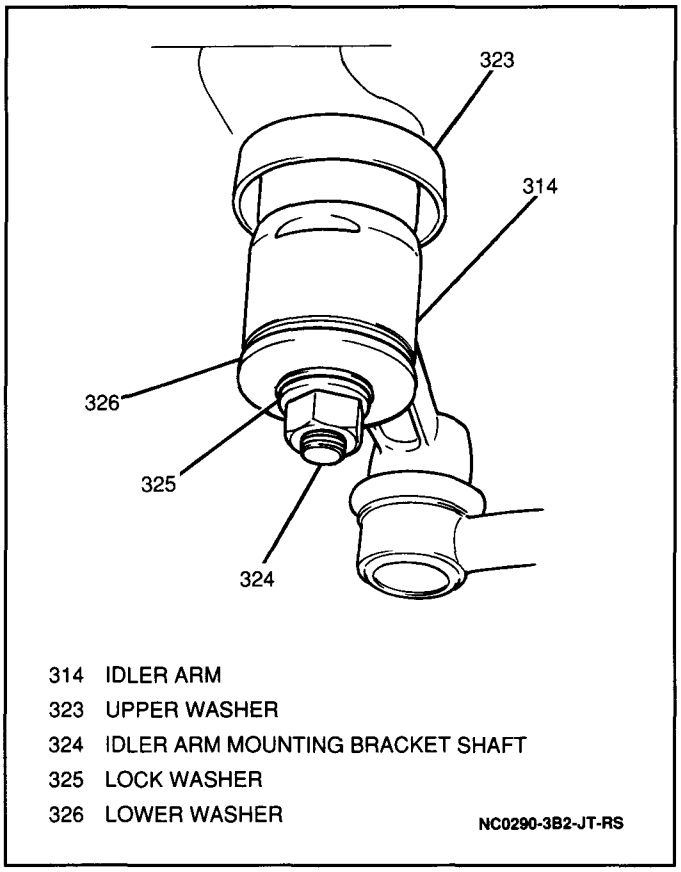

Figure 14 Idler Arm Mounting Bracket Shaft

2. Idler arm to center link; secure with castle nut.

Tighten

- Idler arm castle nut to 45 N·m (33 lb.ft.).

3. Cotter pin to center link. Bend end of pin after installation (Figure 15).

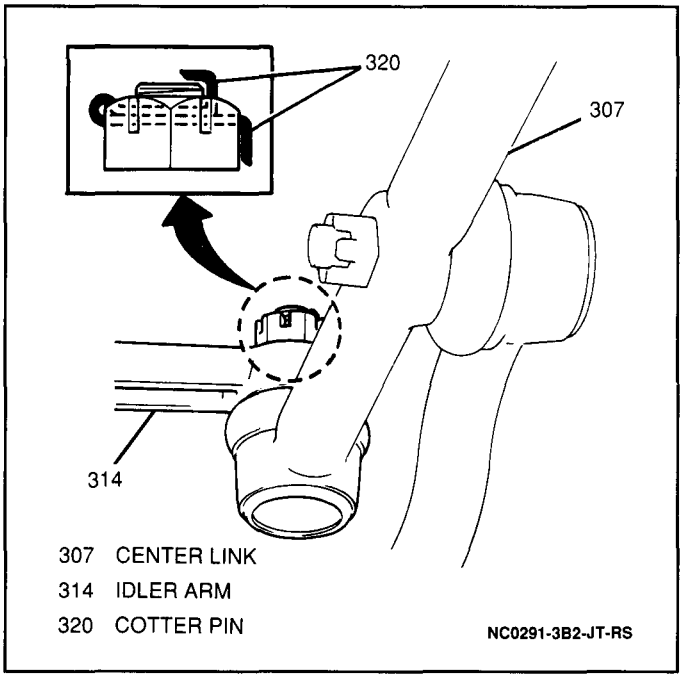

Figure 15 Installing Cotter Pin

- Lower vehicle.

PITMAN ARM

Figure 3

Remove or Disconnect

Tool Required:
J 29107 Pitman Arm Puller

- Raise and suitably support vehicle. Refer to SECTION 0A.

1. Engine skid plate, if equipped (four bolts).
2. Mounting screws and splash shield from left inner wheel well.
3. Cotter pin and castle nut from center link.
   - Separate pitman arm from center link using a J 29107 (Figure 3).
4. Sector shaft nut and washer from steering gear sector shaft; remove pitman arm from steering gear.

Install or Connect

1. Pitman arm to steering gear sector shaft, aligning matchmarks on pitman arm and shaft; secure with sector shaft nut.

   Tighten
   - Sector shaft nut to 130 N·m (95 lb.ft.).
2. Pitman arm to center link; secure with castle nut.

   Tighten
   - Center link-to-pitman arm castle nut to 55 N·m (40 lb.ft.).
3. Cotter pin to center link. Bend end of pin following installation.
4. Splash shield to left inner wheel well; secure with screws.
5. Engine skid plate, if equipped; secure with four bolts.

   Tighten
   - Engine skid plate bolts to 27 N·m (20 lb.ft.).

- Lower vehicle.

STEERING WHEEL INSPECTION

Figure 16

- Inspect steering wheel for play and rattle with the wheels in a straight-ahead position and with the vehicle on level ground (Figure 16). Steering wheel play (A) should be 10 to 30 mm (0.40 to 1.20-inch).

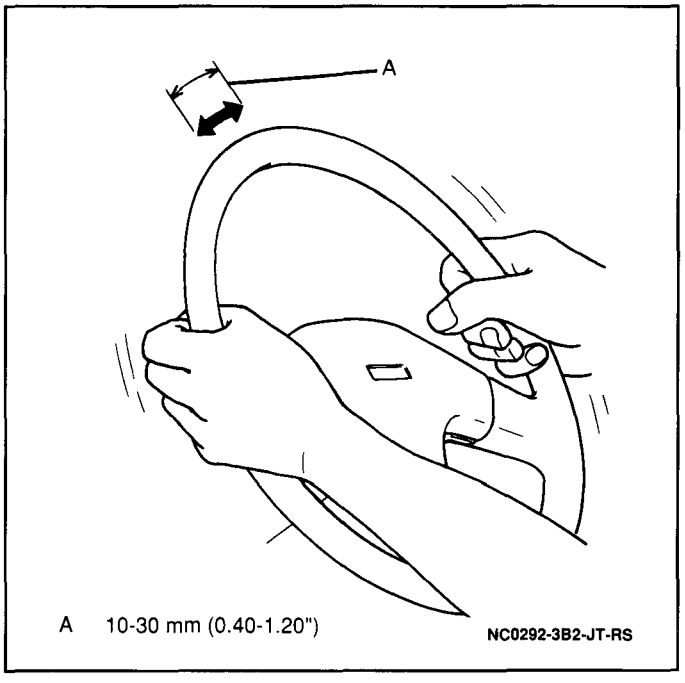

Figure 16 Inspecting Steering Wheel Play

- If play is not within specification, inspect for the following. If any part is found to be defective, replace it.
  - Tie rod ball end for wear.
  - Lower ball joint for wear.
  - Steering shaft joint for wear.
  - Idler arm bushing for damage or wear.
  - Loosely installed parts.
  - Steering gear sector shaft for wear.

MANUAL STEERING GEAR INSPECTION

Oil Level

Figure 17

- Inspect the manual steering gear oil level through the steering gear fill/breather plug, located on the top of the gear box. Gear oil should be visible 35 mm (1.38-inch) below the top of the gear box (Figure 17). If the oil is not visible, fill to the specified level with manual steering gear lube GM P/N 1052182, or equivalent.

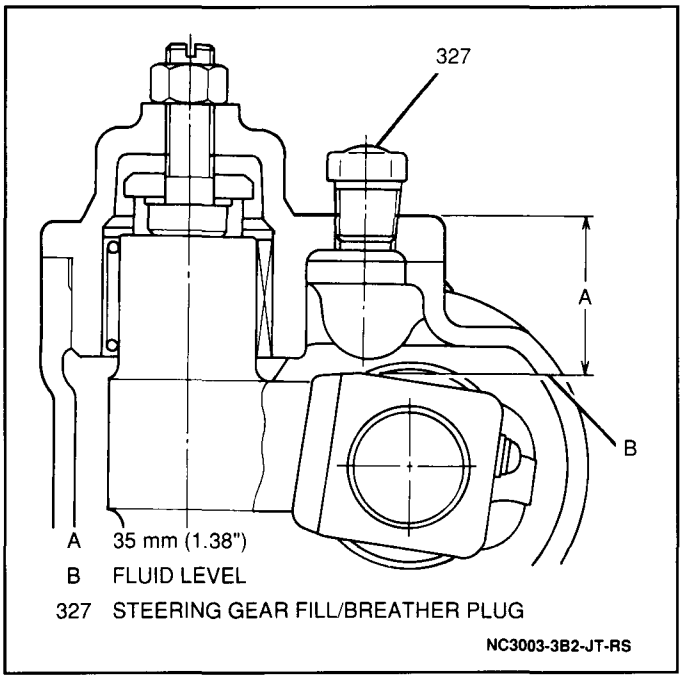

Figure 17 Steering Gear Oil Level

Adjusting Worm Shaft Preload Torque

Figures 18 and 19

The steering gear has one adjusting nut which sets preload for the sector shaft.

Adjust

Tool Required:
J 34871-A Pinion Socket

1. Worm shaft preload torque:
   A. Check worm shaft to ensure that it is free of thrust play.
   B. Position pitman arm 11 degrees inward from parallel with the worm shaft (Figure 18). (With pitman arm in this position, the vehicle's front wheels are straight.)

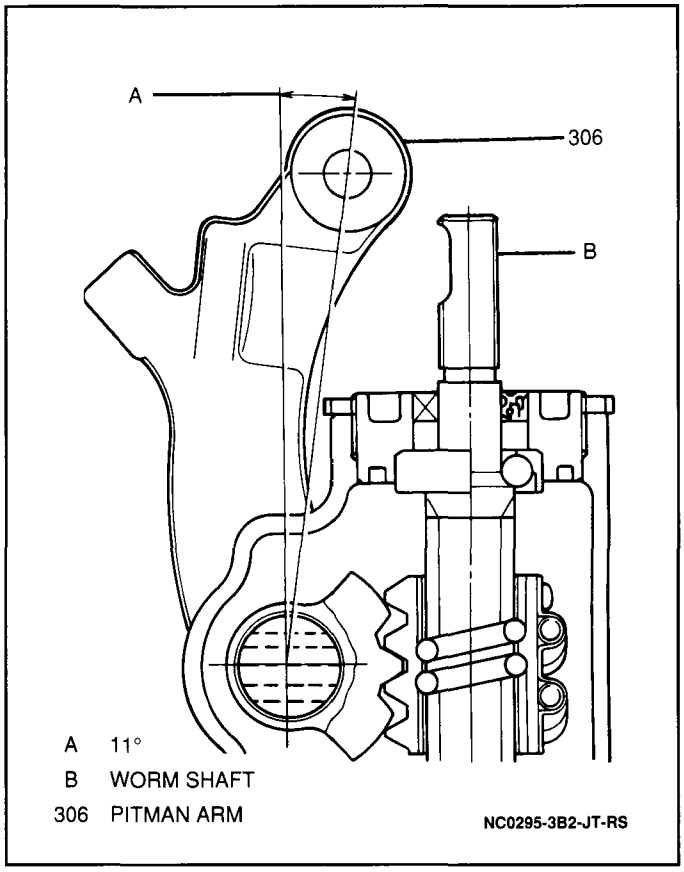

Figure 18 Pitman Arm Position

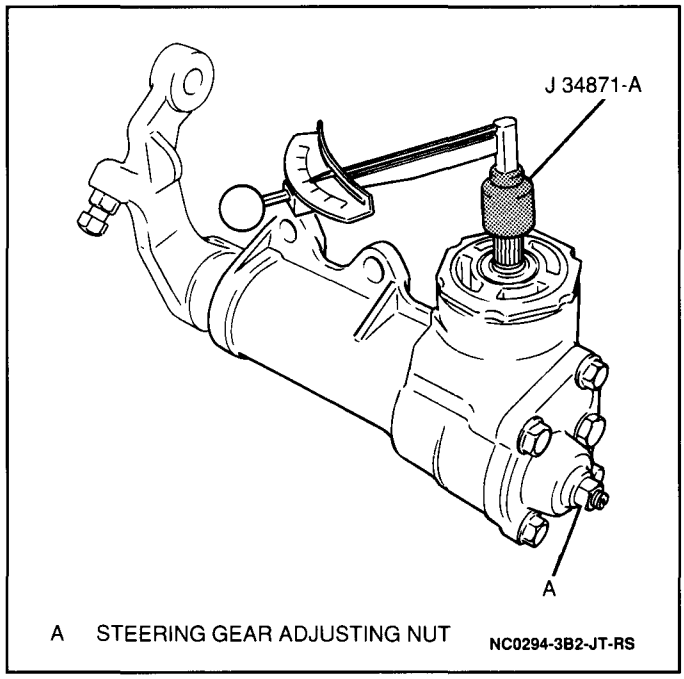

Figure 19 Adjusting Worm Preload Torque

Tighten

- Worm shaft (including steering gear sector shaft) to 1 N·m (9 lb.in.) using a torque wrench and a J 34871-A (Figure 19).

- If the measured worm shaft preload torque does not conform to specification, tighten or loosen the steering gear adjusting nut (depending upon whether the worm shaft preload torque measured high or low), and then recheck worm shaft preload torque.

Important

- If the specified preload torque is not attained even after readjustment, replace the manual steering gear box with a new one.

ADJUSTING STEERING ANGLE

Figure 20

Measure

- Steering angle. Refer to SECTION 3A. If the angle is out of specification, adjust by changing the length of the pitman arm stopper bolts (Figure 20).

Adjust

- Steering angle to 32.5 degrees (inside angle), and 30.5 degrees (outside angle).

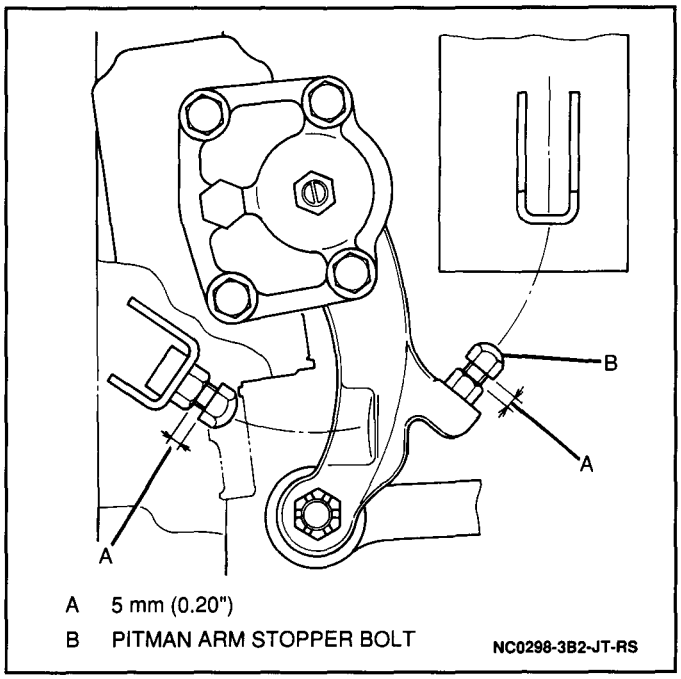

Figure 20 Adjusting Steering Angle

SPECIFICATIONS

FASTENER TORQUES

Manual Steering Gear Mounting Pilot Bolts	100 N·m (72 lb.ft.)
Pitman Arm Sector Shaft Nut	130 N·m (95 lb.ft.)
Center Link-To-Pitman Arm Castle Nut	55 N·m (40 lb.ft.)
Engine Skid Plate Bolts	27 N·m (20 lb.ft.)
Tie Rod Castle Nut	45 N·m (33 lb.ft.)
Tie Rod Locknut	65 N·m (48 lb.ft.)
Tie Rod End Castle Nut	45 N·m (33 lb.ft.)
Tie Rod End Locknut	65 N·m (48 lb.ft.)
Idler Arm Nut	75 N·m (55 lb.ft.)
Idler Arm Castle Nut	45 N·m (33 lb.ft.)
Worm Shaft Preload	1 N·m (9 lb.in.)

STEERING GEAR SPECIFICATIONS

Steering Gear Preload

Steering Gear Sector Shaft Preload ..... 1 N·m (9 lb.in.)

Steering Gear Angle

Inside Angle ..... 32.5 degrees
Outside Angle ..... 30.5 degrees

SERVICE PARTS INFORMATION

Component Name Used in Section 3B2	Reference Name in Service Parts Catalog	Group Number
Steering Gear	Housing, Steering Gear	6.803
Pitman Arm	Arm, Pitman	6.859
Center Link	Linkage, Steering	6.870
Idler Arm	Arm, Steering Linkage Idler	6.895
Tie Rod	End, Steering Linkage Tie Rod	6.233
Tie Rod End	End, Steering Linkage Tie Rod	6.233
Tie Rod Connector Sleeve	Fitting, Steering Linkage Tie Rod	6.232
Lower Steering Shaft	Shaft, Steering Column Lower	6.524

SPECIAL TOOLS

1
J 21687-02

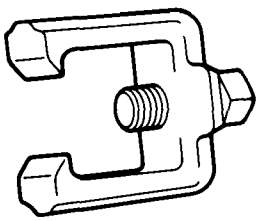

2
J 34871-A

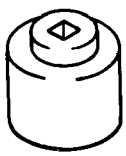

3
J 29107

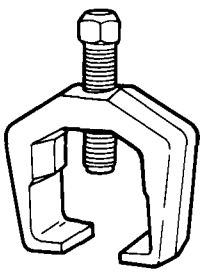

1 TIE ROD END REMOVER
2 PINION SOCKET
3 PITMAN ARM REMOVER

NC3004-3B2-JT-RS

SECTION 3C

FRONT SUSPENSION

CAUTION: To avoid personal injury, provide additional support for the vehicle at the opposite end from which components are being removed. This will reduce the possibility of the vehicle falling off the hoist.

NOTICE: When fasteners are removed, always reinstall them at the same location from which they were removed. If a fastener needs be replaced, use the correct part number fastener for that application. If the correct part number is not available, a fastener of equal size and strength (or stronger) may be used. Fasteners that are not reused, and those requiring thread-locking compound, will be called out. The correct torque values must be used when installing fasteners that require them. If the above procedures are not followed, parts or system damage could result.

CONTENTS

General Description 3C-1
Front Suspension Inspection 3C-3
On-Vehicle Service 3C-3
Stabilizer Bar and Bushing 3C-3
Strut Damper 3C-3
Coil Spring 3C-4
Steering Knuckle and Spindle 3C-6
Control Arm and Ball Joint 3C-7
Control Arm Bushings 3C-8
Locking Hub — Four-Wheel Drive Models .. 3C-11
Manual Locking Hub 3C-11
Automatic Locking Hub 3C-12
Wheel Hub and Bearing 3C-13
Two-Wheel Drive Models 3C-13
Specifications 3C-16
Fastener Torques 3C-16
Service Parts Information 3C-16
Special Tools 3C-17

GENERAL DESCRIPTION

The front suspension is laterally independent and utilizes struts and separate coil springs. The upper end of a strut is anchored to the body by a strut support. The strut and strut support are isolated by a rubber mount.

The lower end of the strut is connected to the upper end of a steering knuckle. The lower end of the knuckle is attached to a ball joint which is incorporated into a unit with a control arm. The steering knuckle is connected to the tie rod end. Movement of the steering wheel is transmitted to the tie rod end and then to the knuckle, causing the wheel to turn (Figure 1).

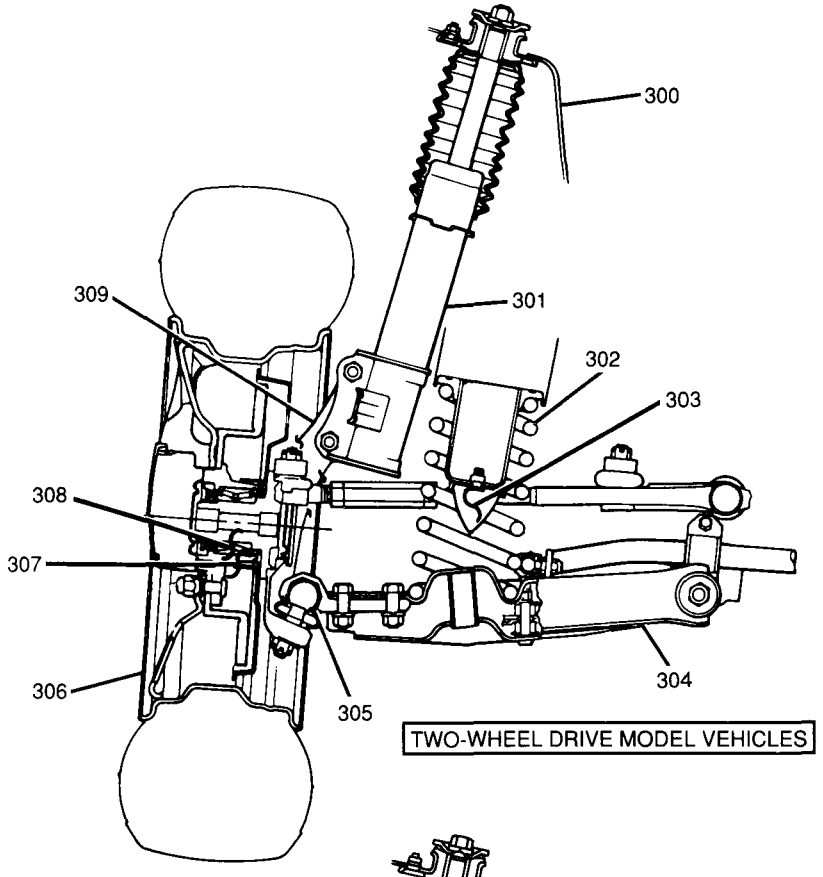

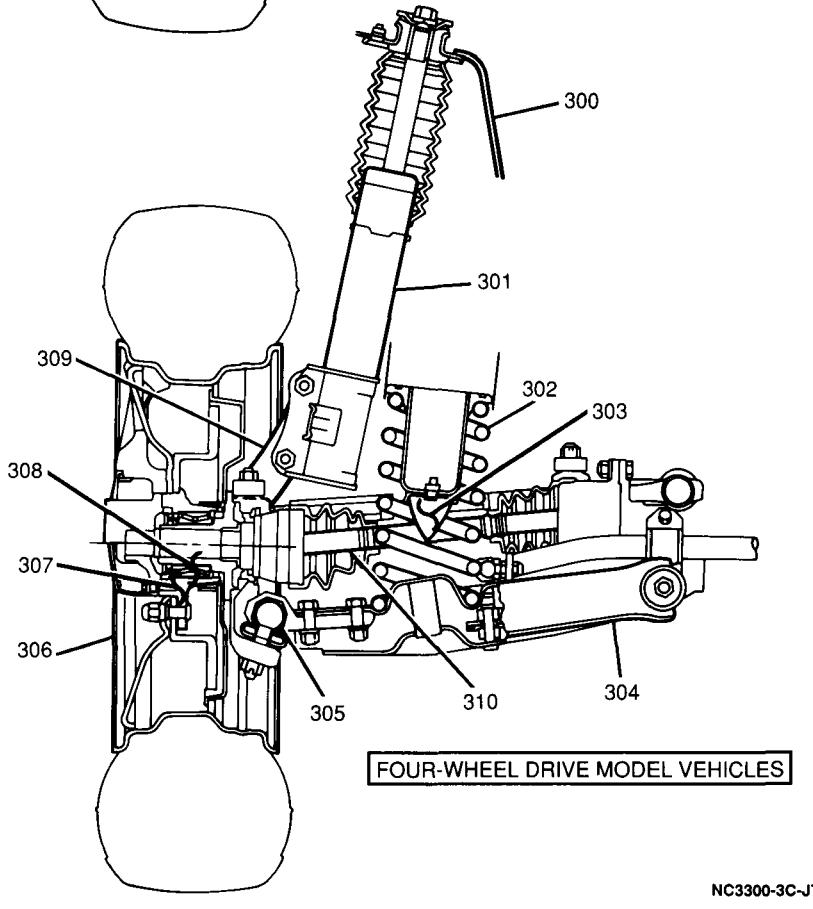

300 BODY
301 STRUT DAMPER
302 COIL SPRING
303 BUMP STOPPER
304 CONTROL ARM
305 BALL JOINT
306 WHEEL
307 WHEEL HUB
308 WHEEL BEARING
309 STEERING KNUCKLE
310 DRIVE AXLE

Figure 1 Front Suspension Components

FRONT SUSPENSION INSPECTION

If complaints of hard ride are encountered, the first items to investigate are tire pressure, trim height, and strut condition; refer to SECTION 3. If these are correct, the amount of friction in the front suspension should be checked.

ON-VEHICLE SERVICE

STABILIZER BAR AND BUSHING

Figure 2

Remove or Disconnect

- Raise and suitably support vehicle. Refer to SECTION 0A.

1. Engine skid plate, if equipped (four bolts).
2. Stabilizer bar from right and left stabilizer links by removing retaining nuts (Figure 2).

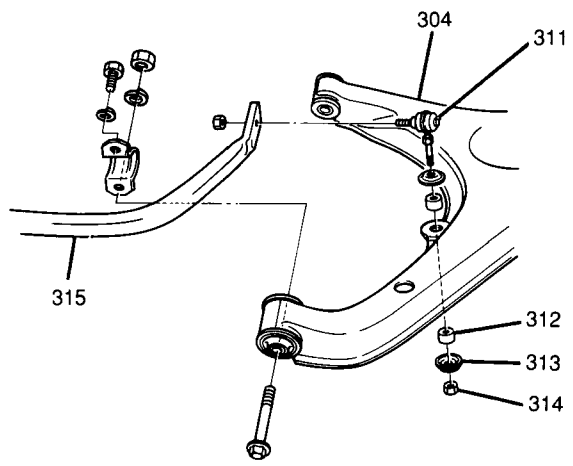

304 CONTROL ARM
311 STABILIZER LINK
312 BUSHING
313 WASHER
314 STABILIZER LINK NUT
315 STABILIZER BAR

NC3001-3C-JT-RS

Figure 2 Stabilizer Bar and Bushings

3. Right and left stabilizer bar mounting bracket bolts and nuts.
4. Stabilizer bar, mounting brackets and bushings from vehicle.

Install or Connect

1. Stabilizer bar, bushings and mounting brackets to vehicle; secure with nuts and bolts. Do not fully tighten nuts and bolts.
2. Stabilizer bar to right and left stabilizer links; secure with nuts. Do not fully tighten nuts.

   Tighten

   - Stabilizer bar-to-link nuts to 28 N·m (21 lb.ft.).
   - Stabilizer bar mounting bracket bolts and nuts to 50 N·m (37 lb.ft.).

3. Engine skid plate to vehicle, if equipped; secure with four bolts.

   Tighten

   - Engine skid plate bolts to 54 N·m (40 lb.ft.).

- Lower vehicle.

STRUT DAMPER

Figures 3, 4 and 5

Remove or Disconnect

- Raise and suitably support vehicle. Refer to SECTION 0A.

1. Wheel and tire from vehicle. Refer to SECTION 3E.
2. E-clip securing brake hose and remove brake hose from strut damper (Figure 3).

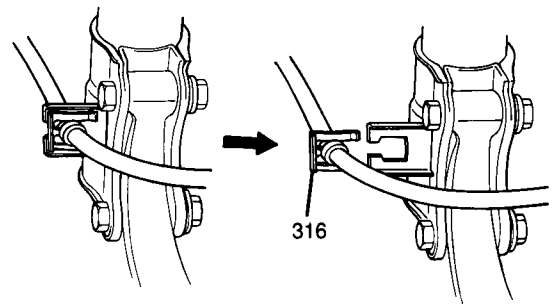

316 BRAKE HOSE E-CLIP

NC3002-3C-JT-RS

Figure 3 Brake Hose E-Clip

- Support control arm with floor jack.
3. Two strut damper-to-steering knuckle bolts and nuts, separating strut from knuckle (Figure 4).

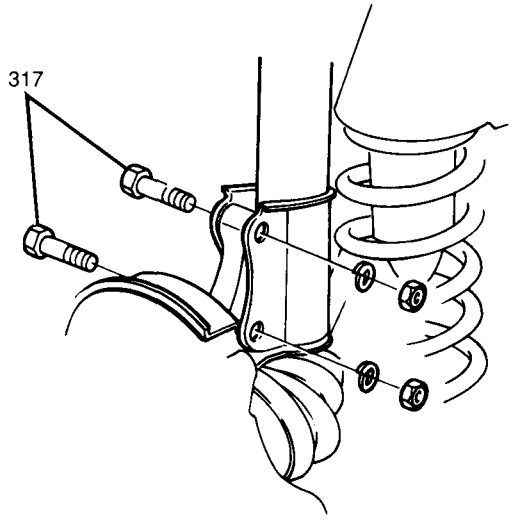

317 STRUT DAMPER-TO-STEERING KNUCKLE BOLTS

NC0315-3C-JT-RS

Figure 4 Strut Damper-to-Steering Knuckle Bolts and Nuts

- Lower vehicle to allow access to strut damper upper support nuts.
4. Three strut damper upper support nuts (Figure 5).

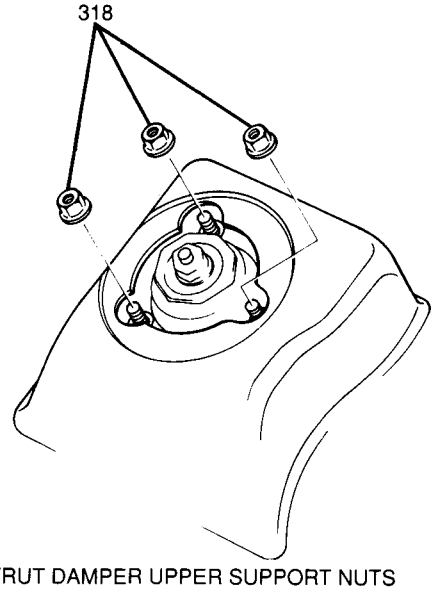

318 STRUT DAMPER UPPER SUPPORT NUTS

NC0316-3C-JT-RS

Figure 5 Strut Damper Upper Support Nuts

5. Strut damper from vehicle.

Install or Connect

1. Strut damper to vehicle; secure with three support nuts (Figure 5). Do not tighten fully.
2. Strut damper to steering knuckle, secure with two bolts and nuts (Figure 4).

Tighten

- Strut damper-to-steering knuckle bolts and nuts to 90 N·m (66 lb.ft.).
- Strut damper upper support nuts to 25 N·m (18 lb.ft.).

- Remove floor jack.
3. Brake hose to strut damper; secure with E-clip.
4. Wheel and tire. Refer to SECTION 3E.
- Lower vehicle.

COIL SPRING

Figures 2, 6, 7 and 8

Remove or Disconnect

- Raise and suitably support vehicle. Refer to SECTION 0A.
1. Wheel and tire. Refer to SECTION 3E.
2. Engine skid plate, if equipped (four bolts).
- Support control arm with floor jack (Figure 6).

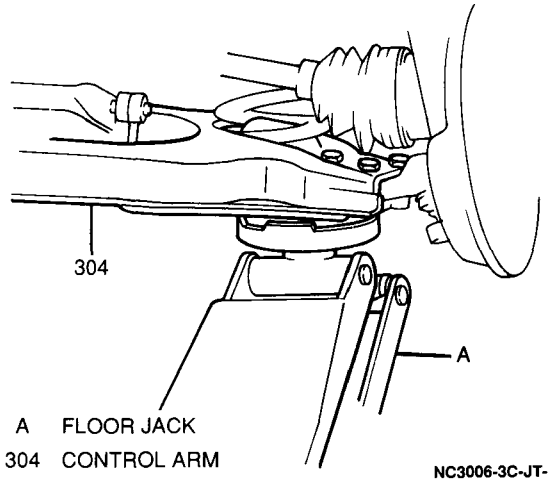

A FLOOR JACK
304 CONTROL ARM

NC3006-3C-JT-RS

Figure 6 Supporting Control Arm With Floor Jack

3. Three nuts and bolts from control arm, separating ball joint and control arm.
4. Stabilizer link from control arm by removing one nut (Figure 2).

- Lower floor jack.

5. Coil spring from vehicle (Figure 7).

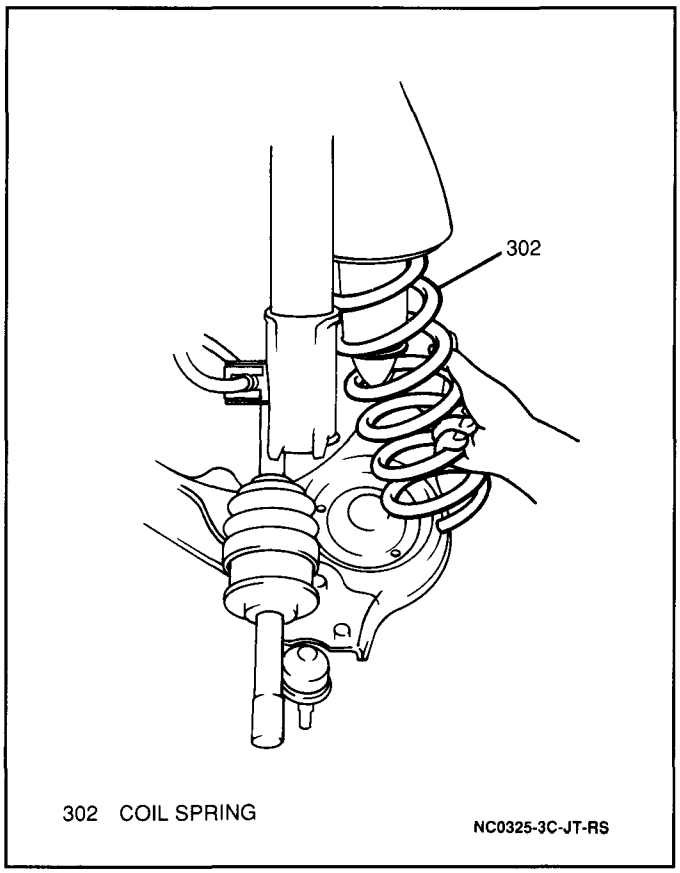

Figure 7 Removing Coil Spring

Install or Connect

1. Coil spring to vehicle.

Important

- The bottom of the coil spring has a larger diameter than the top. Be sure to install it correctly (Figure 8).

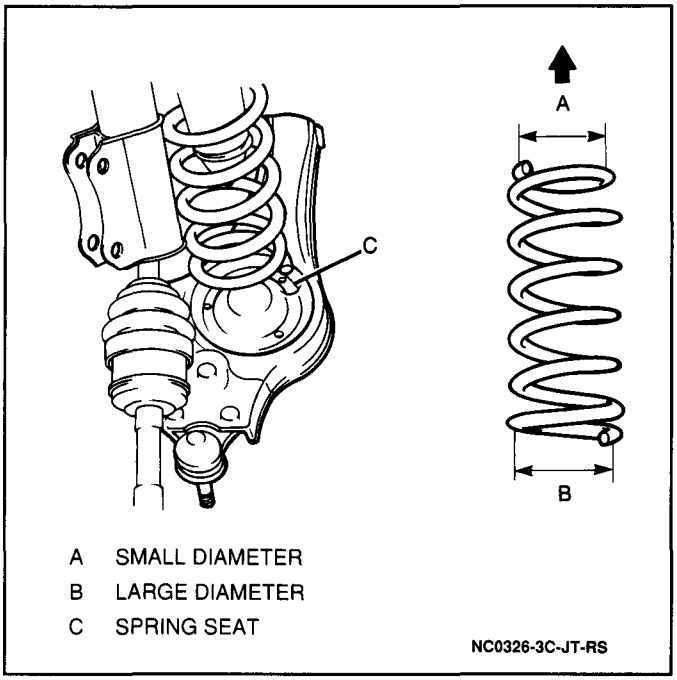

Figure 8 Coil Spring Diameter

- Raise floor jack.

2. Stabilizer link to control arm; secure with one nut.

Tighten

- Stabilizer link-to-control arm nut to 28 N·m (21 lb.ft.).

3. Control arm to ball joint; secure with three nuts and bolts.

Tighten

- Ball joint nuts and bolts to 85 N·m (63 lb.ft.).

- Remove floor jack.

4. Engine skid plate, if equipped; secure with four bolts.

Tighten

- Engine skid plate bolts to 54 N·m (40 lb.ft.).

5. Wheel and tire. Refer to SECTION 3E.

- Lower vehicle.

STEERING KNUCKLE AND SPINDLE

Figures 4, 6, 9, 10 and 11

Remove or Disconnect

Tools Required:
J 21687-02 Tie Rod End Remover
J 22888-D Ball Joint Remover

- Raise and suitably support vehicle. Refer to SECTION 0A.

1. Wheel and tire. Refer to SECTION 3E.
2. Locking hub (four-wheel drive models). Refer to "Locking Hubs — Four-Wheel Drive Models" later in this section.
3. Hub end cap (two-wheel drive models).
4. Brake caliper from steering knuckle by removing two caliper pin bolts. Suspend caliper assembly with wire so as not to damage brake hose (Figure 9).

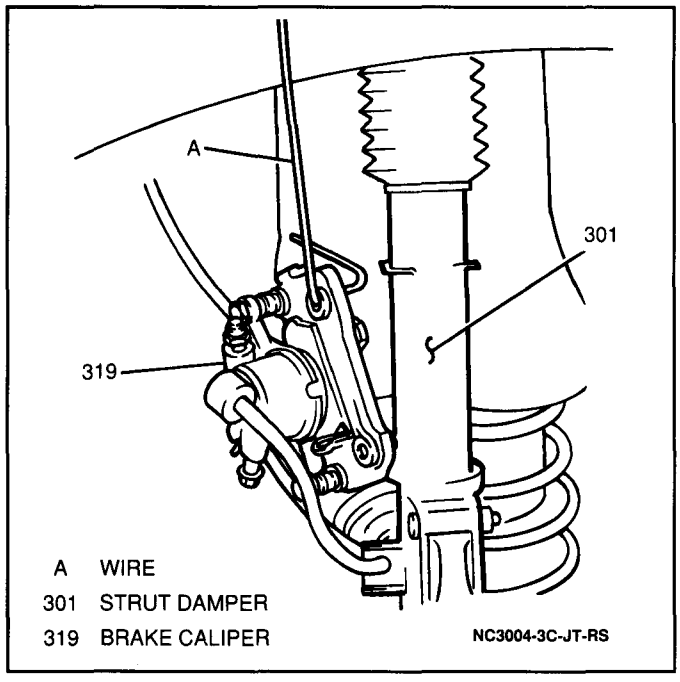

Figure 9 Suspending Brake Caliper Assembly

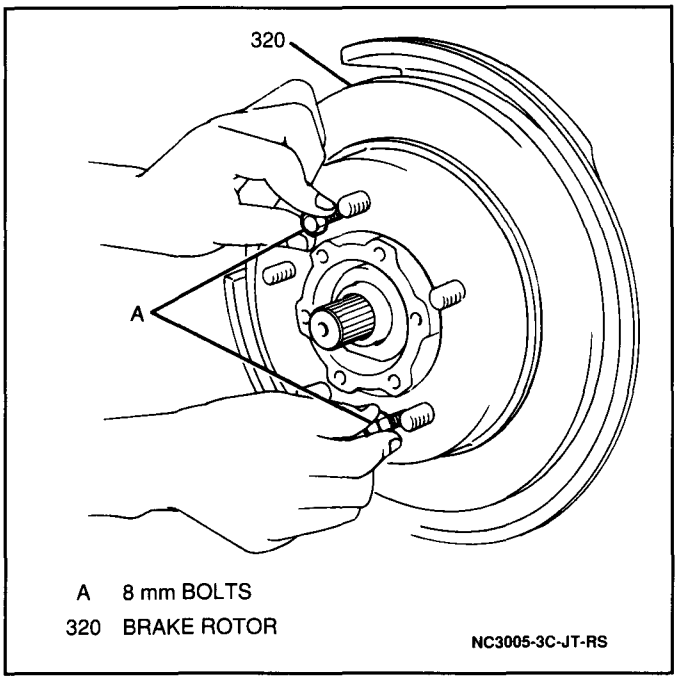

Figure 10 Removing Brake Rotor

5. Brake rotor from wheel hub. If rotor cannot be removed by hand, install two 8 mm bolts into rotor. Tightening the bolts will force rotor off (Figure 10).
6. Wheel hub and bearing. Refer to "Wheel Hub and Bearing" later in this section.
7. Dust shield from steering knuckle (four bolts).
8. Spindle from steering knuckle by tapping with hammer.

- Support control arm with floor jack (Figure 6).

9. Two strut damper-to-steering knuckle bolts and nuts, separating strut damper from knuckle (Figure 4).
10. Tie rod end cotter pin and castle nut.
11. Tie rod end from steering knuckle using a J 21687-02.
12. Cotter pin and castle nut from ball joint.

- Separate ball joint from steering knuckle using a J 22888-D and remove knuckle from vehicle.

13. Oil seal from knuckle.

Install or Connect

Tool Required:
J 37750 Steering Knuckle Oil Seal Installer

1. New oil seal to steering knuckle using a J 37750 (Figure 11).

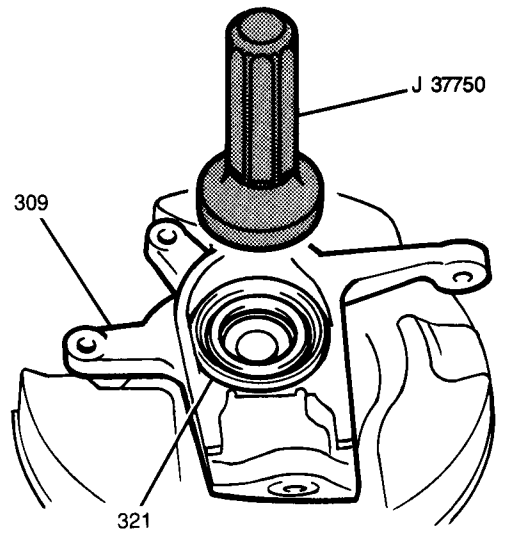

309 STEERING KNUCKLE
321 OIL SEAL
NC0350-3C-JT-RS

Figure 11 Installing Steering Knuckle Oil Seal

2. Steering knuckle to ball joint; secure with castle nut. Do not tighten fully.
3. Steering knuckle to strut damper; secure with two nuts and bolts (Figure 4).

Tighten

- Ball joint castle nut to 85 N·m (63 lb.ft.).
- Strut damper-to-knuckle nuts and bolts to 90 N·m (66 lb.ft.).

4. Tie rod end to knuckle; secure with castle nut.

Tighten

- Tie rod end castle nut to 40 N·m (30 lb.ft.).

- Remove floor jack.
5. Cotter pins to ball joint and tie rod end.
- Fill recess in wheel spindle with 10 g (0.35 oz.) of GM Lubriplate® lubricant P/N 1052196, or equivalent.
6. Spindle to steering knuckle.
7. Dust shield to steering knuckle; secure with four bolts.

Tighten

- Dust shield bolts to 15 N·m (11 lb.ft.).

8. Wheel hub and bearing. Refer to "Wheel Hub and Bearing" later in this section.
9. Brake rotor to wheel hub.
10. Brake caliper to rotor and steering knuckle; secure with two caliper pin bolts.

Tighten

- Brake caliper pin bolts to 88 N·m (65 lb.ft.).

11. Hub end cap (two-wheel drive models).
12. Locking hub (four-wheel drive models). Refer to "Locking Hubs — Four-Wheel Drive Models" later in this section.
13. Wheel and tire. Refer to SECTION 3E.
- Lower vehicle.

CONTROL ARM AND BALL JOINT

Figures 2, 6, 7, 8, 12 and 13

Remove or Disconnect

Tool Required:
J 22888-D Ball Joint Remover

- Raise and suitably support vehicle. Refer to SECTION 0A.
1. Wheel and tire. Refer to SECTION 3E.
2. Engine skid plate, if equipped (four bolts).
- Support control arm with floor jack (Figure 6).
3. Cotter pin and castle nut from ball joint.
- Separate ball joint from control arm using a J 22888-D.
4. Stabilizer link from control arm by removing one nut (Figure 2).
- Lower floor jack.
5. Coil spring from vehicle (Figure 7).
6. Front through bolt and nut from control arm (Figure 12).

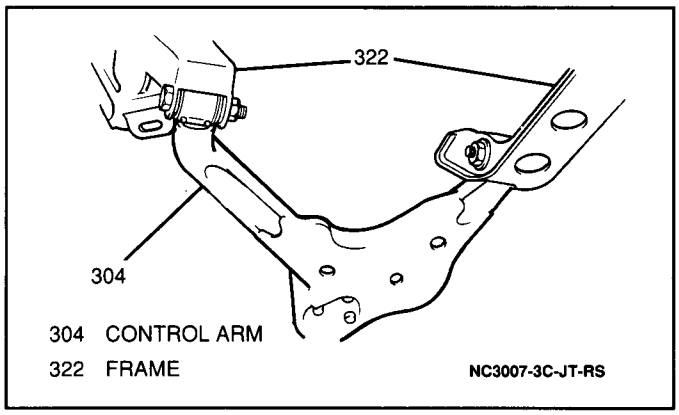

304 CONTROL ARM
322 FRAME
NC3007-3C-JT-RS

Figure 12 Control Arm

7. Rear through bolt and nut from control arm and remove control arm from vehicle chassis (Figure 12).

8. Ball joint from control arm by removing three ball joint nuts and bolts (Figure 13).

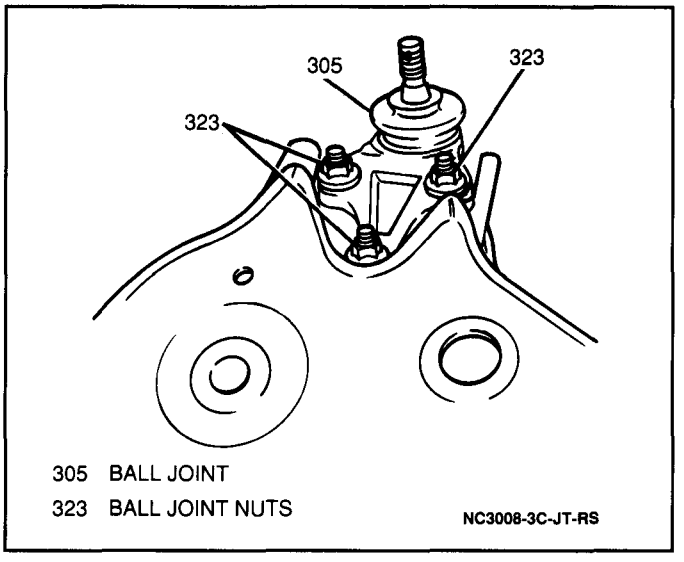

Figure 13 Ball Joint Mounting

Install or Connect

1. Ball joint to control arm; secure with three nuts and bolts (Figure 13).

Tighten

- Ball joint nuts and bolts to 85 N·m (63 lb.ft.).

2. Control arm to vehicle chassis; secure with front and rear through bolts and nuts.

Tighten

- Control arm-to-chassis through bolts and nuts to 100 N·m (74 lb.ft.).

3. Coil spring to vehicle.

Important

- The bottom of the coil spring has a larger diameter than the top. Be sure to install it correctly (Figure 8).

- Raise floor jack.

4. Stabilizer link to control arm; secure with one nut.

Tighten

- Stabilizer link-to-control arm nut to 28 N·m (21 lb.ft.).

5. Ball joint to steering knuckle; secure with castle nut.

Tighten

- Ball joint castle nut to 85 N·m (63 lb.ft.).

6. Cotter pin to ball joint.

- Remove floor jack.

7. Engine skid plate, if equipped; secure with four bolts.

Tighten

- Engine skid plate bolts to 54 N·m (40 lb.ft.).

8. Wheel and tire. Refer to SECTION 3E.

- Lower vehicle.

CONTROL ARM BUSHINGS

Figures 14 through 17

Remove or Disconnect

Tools Required:
J 35561 Front Control Arm Bushing Service Set
J 29792 Front Control Arm Bushing Service Set
J 9519-7 Bearing Remover
J 9519-17 Bearing Remover

1. Control arm from vehicle. Refer to "Control Arm and Ball Joint" earlier in this section.

- Using a J 35561-1, a J 35561-3, a J 29792-2 and a press, remove the bushing from the short branch of the control arm (Figure 14).

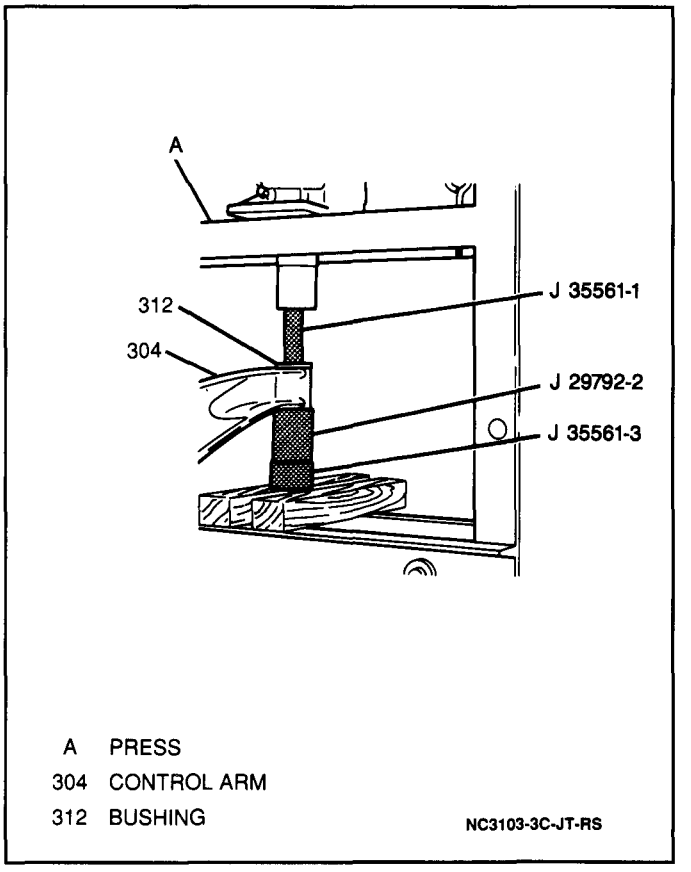

Figure 14 Removing Control Arm Bushing — Short Branch

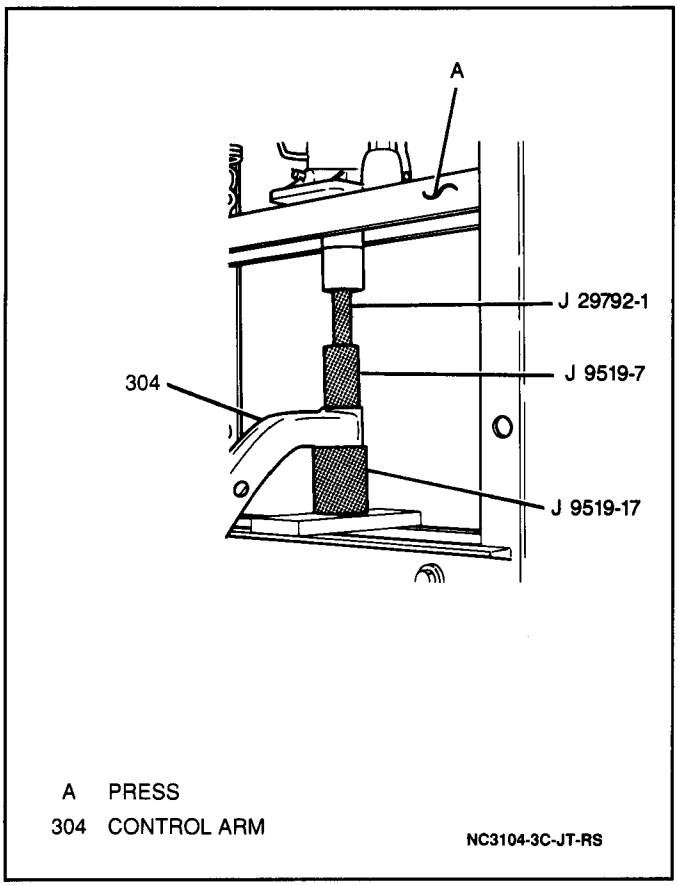

Figure 15 Removing Control Arm Bushing — Long Branch

- Using a J 29792-1, a J 9519-7, a J 9519-17 and a press, remove the bushing from the long branch of the control arm (Figure 15).

Install or Connect

Tools Required:
- J 35561 Front Control Arm Bushing Service Set
- J 29792 Front Control Arm Bushing Service Set
- J 9519-16 Bearing Remover
- J 9519-9 Bearing Remover

- Using a J 35561, a J 29792-2 and a press, install a new bushing into the short branch of the control arm (Figure 16).

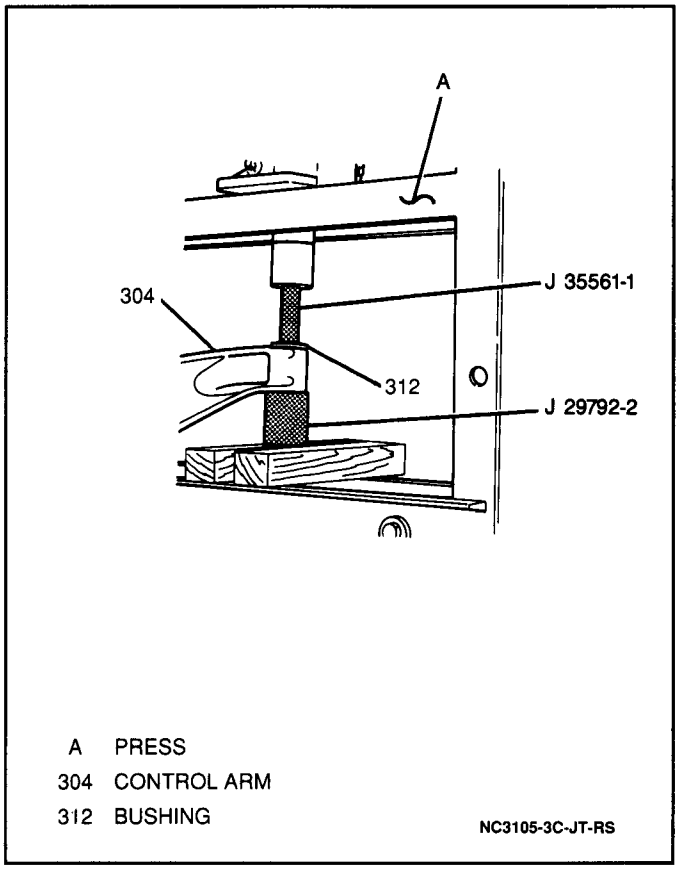

Figure 16 Installing Control Arm Bushing — Short Branch

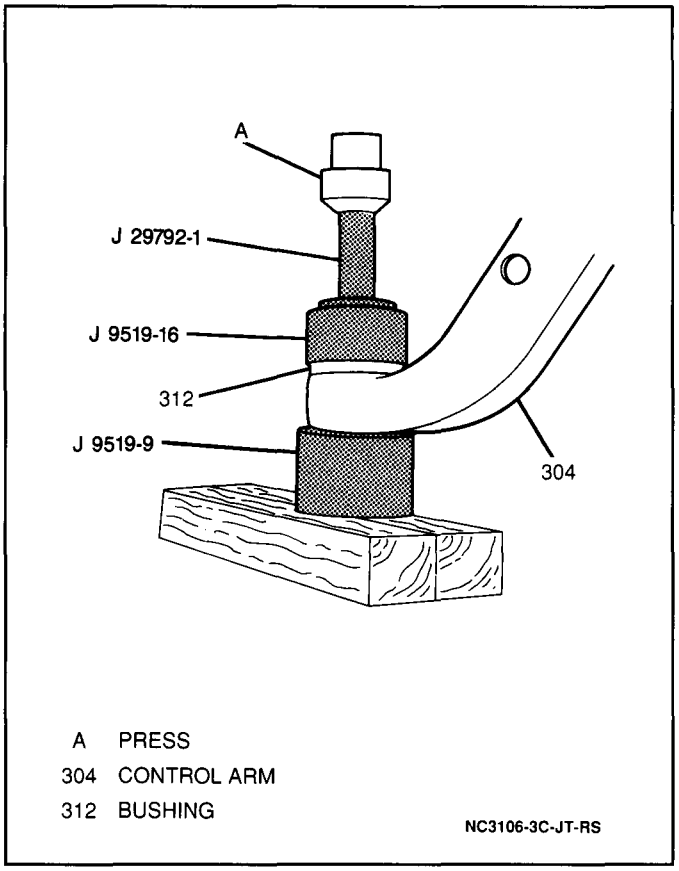

Figure 17 Installing Control Arm Bushing – Long Branch

- Using a J 29792-1, a J 9519-9 and J 9519-16 and a press, install a new bushing into the long branch of the control arm (Figure 17).

1. Control arm to vehicle. Refer to "Control Arm and Ball Joint" earlier in this section.

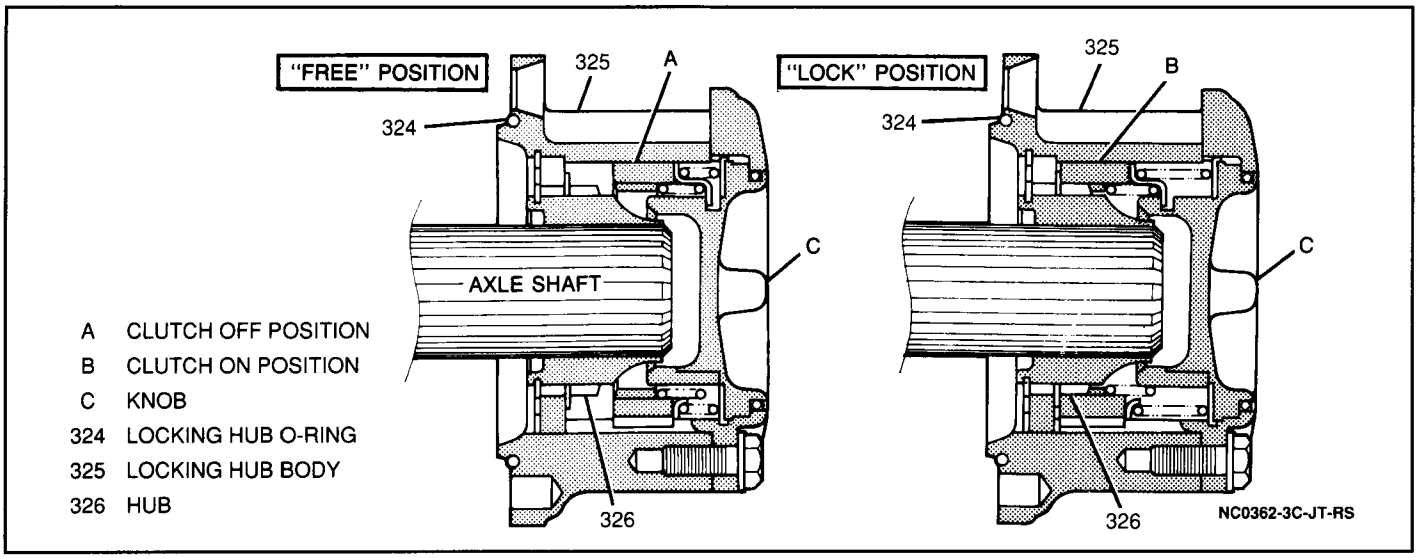

Figure 18 Locking Hub Operation

LOCKING HUB — FOUR-WHEEL DRIVE MODELS

Figures 18 and 19

Manual locking hubs are standard on Geo Tracker four-wheel drive Base models. Automatic locking hubs are standard on LSi four-wheel drive models.

Important

- Front locking hubs must not be packed with grease. If hubs are not operating properly, clean sliding surfaces of hubs and lubricate each sliding surface with locking front hub lubricant GM P/N 1052750, or equivalent. If hubs still do not operate properly, they should be replaced.

Manual Locking Hub

Figures 18 and 19

Manual locking hub operation is accomplished by placing the transmission in "N" (neutral), moving the transfer case shift lever to "4H" or "4L," and then moving the locking hub knob from the "FREE" to the "LOCK" position. Inspect the wheels for smooth operation with knob in either position.

Remove or Disconnect

1. Manual locking hub cover and gasket by removing six Allen-head bolts.
2. Locking hub body and O-ring by removing six bolts from locking hub and locking hub from wheel flange (Figure 19).

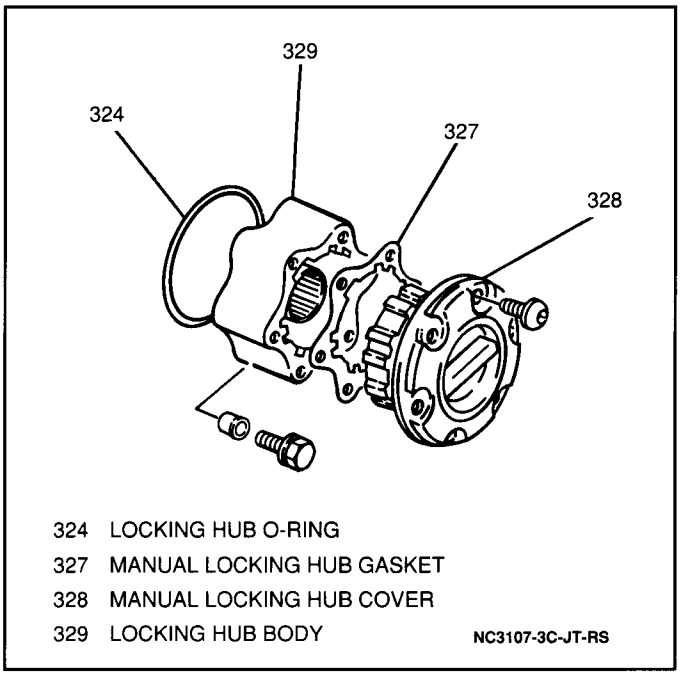

Figure 19 Manual Locking Hub

Install or Connect

1. New O-ring to manual locking hub body.
2. Locking hub body to wheel flange; secure with six bolts.

Tighten

- Manual locking hub body bolts to 25 N·m (18 lb.ft.).

3. New gasket to locking hub cover.
4. Locking hub cover; secure with six Allen-head bolts.

Important

- "O" mark on hub knob must be in the "FREE" position.
- Hub cover clutch must be pulled out toward locking hub cover (Figure 18).

Tighten

- Manual locking hub cover bolts to 12 N·m (106 lb.in.).

Automatic Locking Hub

Figures 20 and 21

Remove or Disconnect

- Unscrew automatic locking hub cover and remove O-ring from hub body.

1. Locking hub body and O-ring by removing six Allen-head bolts from wheel hub flange (Figure 20).

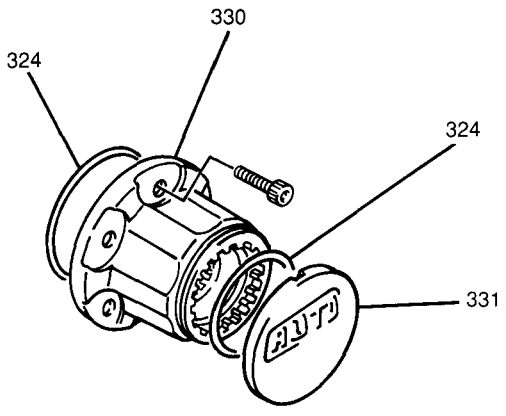

324 LOCKING HUB O-RING
330 AUTOMATIC LOCKING HUB BODY
331 AUTOMATIC LOCKING HUB COVER

NC3108-3C-JT-RS

Figure 20 Automatic Locking Hub

Install or Connect

1. New O-ring to automatic locking hub body.
2. Locking hub body to wheel hub flange, aligning indexing tab on locking hub with notched portion of spindle (Figure 21). Secure locking hub with six Allen-head bolts.

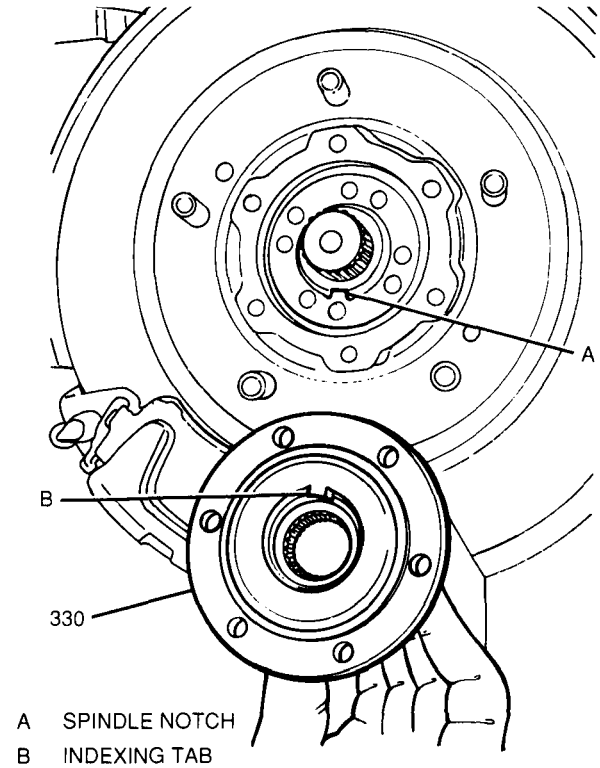

A SPINDLE NOTCH
B INDEXING TAB
330 AUTOMATIC LOCKING HUB BODY

NC3109-3C-JT-RS

Figure 21 Aligning Automatic Locking Hub

Tighten

- Automatic locking hub body bolts to 25 N·m (18 lb.ft.).

3. New O-ring to locking hub cover.
4. Locking hub cover to locking hub body; screw on.

WHEEL HUB AND BEARING

Two-Wheel Drive Models

Figures 9, 10, and 22 through 29

Remove or Disconnect

Tools Required:
- J 37763 Wheel Bearing Socket
- J 8092 Driver Handle
- J 37781 Front Wheel Hub Remover
- J 37772 Front Wheel Hub Bearing Race Remover
- J 2619-01 Slide Hammer

- Raise and suitably support vehicle. Refer to SECTION 0A.

1. Tire and wheel. Refer to SECTION 3E.
2. Brake caliper from rotor and steering knuckle by removing two caliper pin bolts. Suspend caliper assembly with wire so as not to damage brake hose (Figure 9).
3. Brake rotor from wheel hub. If rotor cannot be removed by hand, install two 8 mm bolts into rotor. Tightening the bolts will force rotor off (Figure 10).
4. Hub end cap.
5. Wheel bearing lock plate by removing four screws (Figure 22).

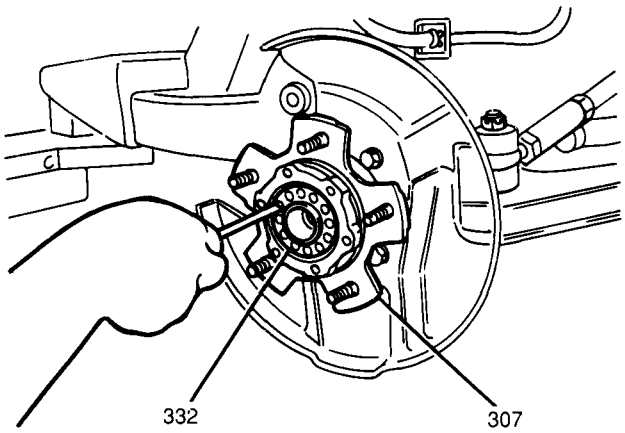

307 WHEEL HUB
332 WHEEL BEARING LOCK PLATE
NC3111-3C-JT-RS

Figure 22 Removing Wheel Bearing Lock Plate

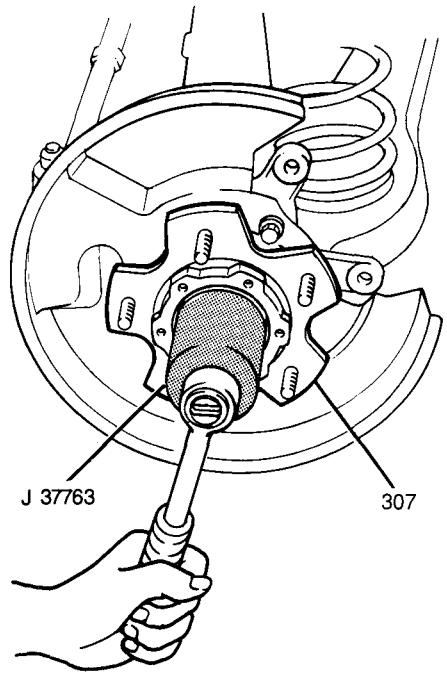

307 WHEEL HUB
NC3020-3C-JT-RS

Figure 23 Removing Wheel Bearing Locknut

6. Wheel bearing locknut by using a J 37763 (Figure 23).
7. Wheel hub complete with bearings and oil seals from spindle. If wheel hub cannot be removed by hand, use a J 37781 with a J 2619-01 (Figure 24).

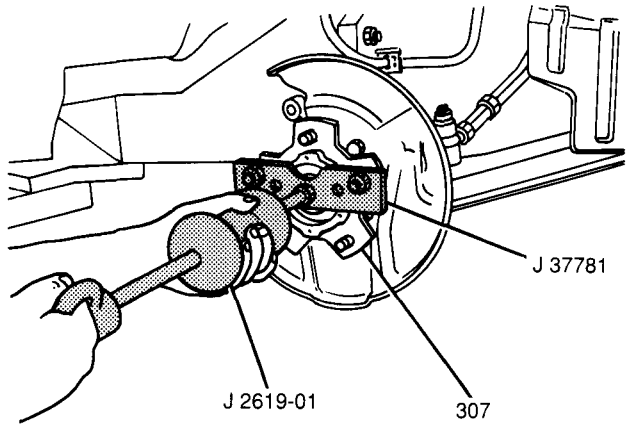

307 WHEEL HUB
NC3110-3C-JT-RS

Figure 24 Removing Wheel Hub and Bearing

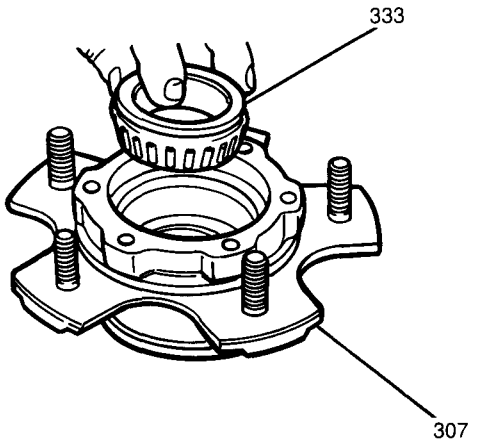

307 WHEEL HUB
333 OUTER BEARING NC3112-3C-JT-RS

Figure 25 Removing Outer Bearing From Hub

8. Outer bearing from hub (Figure 25).
9. Wheel bearing oil seal from hub (Figure 26).

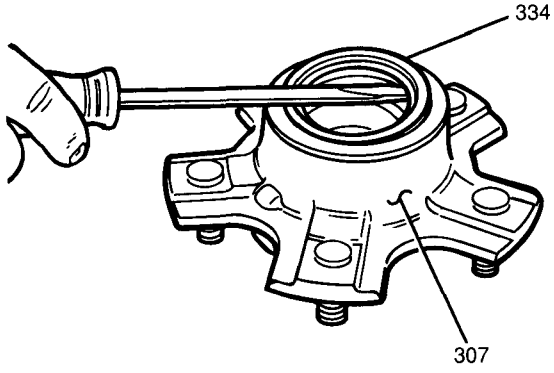

307 WHEEL HUB
334 WHEEL BEARING OIL SEAL NC3113-3C-JT-RS

Figure 26 Removing Wheel Bearing Oil Seal

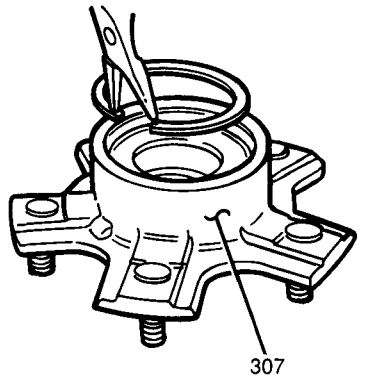

307 WHEEL HUB NC3114-3C-JT-RS

Figure 27 Removing Snap Ring

10. Snap ring from hub (Figure 27).
11. Inner bearing from hub (Figure 28).

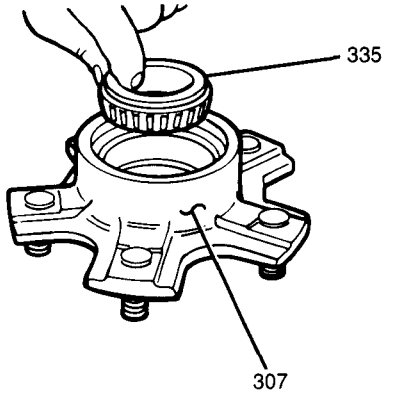

307 WHEEL HUB
335 INNER WHEEL BEARING NC3115-3C-JT-RS

Figure 28 Removing Inner Bearing From Hub

12. Inner and outer bearing races from hub using a J 37772 and a J 8092. Remove bearing races only if they are scored or pitted.

Clean

- Dirt and old grease using a suitable solvent where necessary.

Install or Connect

Tools Required:
J 8092 Driver Handle
J 37777 Front Wheel Bearing Race Installer
J 37774 Wheel Hub Oil Seal Installer
J 37763 Wheel Bearing Socket

- Pack inner and outer bearing assemblies with wheel bearing grease GM P/N 1051344, or equivalent.

1. New inner and outer bearing races (if old races were removed) to hub using a J 37777 and a J 8092.
2. Inner bearing to hub.
3. Snap ring to hub.
4. Wheel bearing oil seal to hub using a J 37774 (Figure 29).
5. Outer bearing to hub.
6. Wheel hub complete with bearings and oil seals to spindle.
7. Wheel bearing locknut by using a J 37763.

Tighten

- Wheel bearing locknut to 210 N·m (155 lb.ft.).

8. Wheel bearing lock plate; secure with four screws.
9. Hub end cap.
10. Brake rotor to wheel hub.
11. Brake caliper to rotor and knuckle; secure with two caliper pin bolts.

Tighten

- Brake caliper pin bolt to 88 N·m (65 lb.ft.).

12. Tire and wheel. Refer to SECTION 3E.

- Lower vehicle.

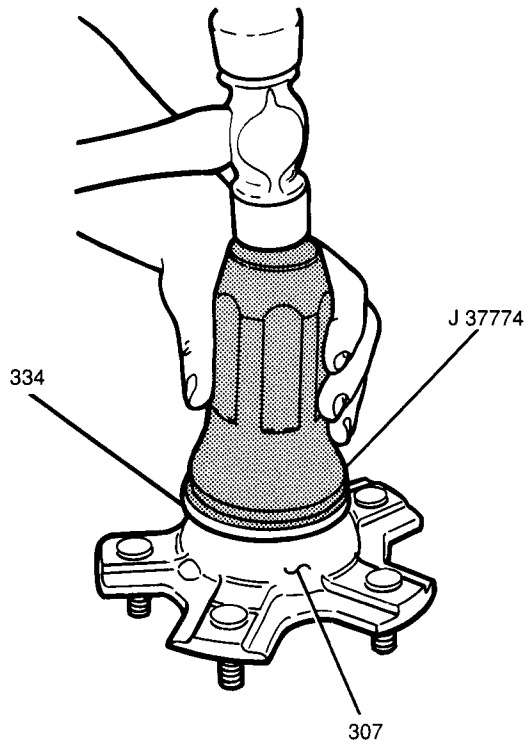

307 WHEEL HUB
334 WHEEL BEARING OIL SEAL NC3116-3C-JT-RS

Figure 29 Installing Wheel Bearing Oil Seal

SPECIFICATIONS

FASTENER TORQUES

Stabilizer Bar-to-Link Nuts	28 N·m (21 lb.ft.)
Stabilizer Bar Mounting Bracket Bolts and Nuts	50 N·m (37 lb.ft.)
Engine Skid Plate Bolts	54 N·m (40 lb.ft.)
Strut Damper-to-Knuckle Bolts and Nuts	90 N·m (66 lb.ft.)
Strut Damper Upper Support Nuts	25 N·m (18 lb.ft.)
Stabilizer Link-to-Control Arm Nut	28 N·m (21 lb.ft.)
Ball Joint Nuts and Bolts	85 N·m (63 lb.ft.)
Ball Joint Castle Nut	85 N·m (63 lb.ft.)
Tie Rod End Castle Nut	40 N·m (30 lb.ft.)
Dust Shield Bolts	15 N·m (11 lb.ft.)
Brake Caliper Pin Bolts	88 N·m (65 lb.ft.)
Control Arm-to-Chassis Through Bolts and Nuts	100 N·m (74 lb.ft.)
Manual Locking Hub Body Bolts	25 N·m (18 lb.ft.)
Manual Locking Hub Cover Bolts	12 N·m (106 lb.in.)
Automatic Locking Hub Body Bolts	25 N·m (18 lb.ft.)
Wheel Bearing Locknut	210 N·m (155 lb.ft.)

SERVICE PARTS INFORMATION

Component Name Used in Section 3C	Reference Name in Service Parts Catalog	Group Number
Automatic Locking Hub	Hub Assembly, Auto Free Wheel	6.308
Manual Locking Hub	Hub Assembly, Fr Drive Free Wheel	6.308
Front Wheel Hub	Hub, Fr Drive Axle Front Wheel	6.307
Front Hub Bearing	Bearing, Front Drive Axle	6.311
Steering Knuckle	Knuckle, Steering	6.020
Strut Damper	Strut, Front Suspension	7.345
Coil Spring	Spring, Front	7.412
Control Arm	Arm, Front Lower Control	6.168
Ball Joint	Joint Front Lower Control Arm	6.174
Stabilizer Bar	Shaft, Front Stabilizer	7.241

SPECIAL TOOLS

1

J 35561

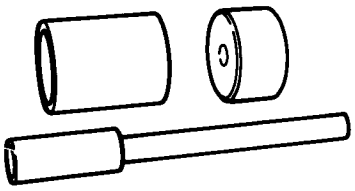

4

J 37763

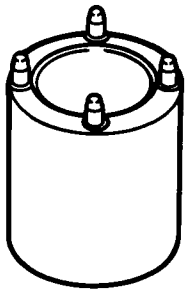

2

J 29792

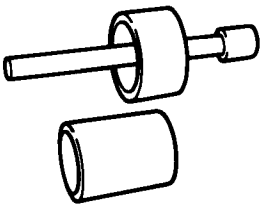

5

J 21687-02

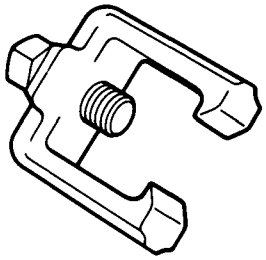

3

J 9519-7, 9, 16, 17

6

J 37781

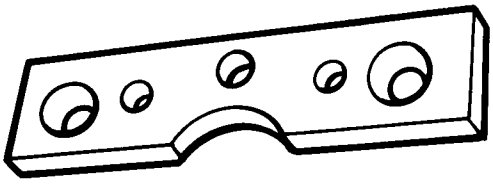

1 FRONT CONTROL ARM BUSHING SERVICE SET
2 FRONT CONTROL ARM BUSHING SERVICE SET
3 BEARING REMOVERS
4 WHEEL BEARING SOCKET
5 TIE ROD END REMOVER
6 FRONT WHEEL HUB REMOVER

NC3301-3C-JT-RS

7

J 37772

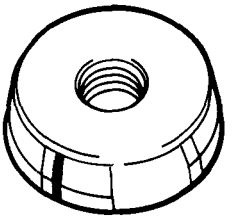

8

J 37777

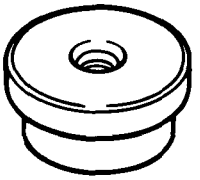

9

J 37774

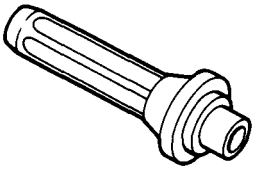

10

J 37750

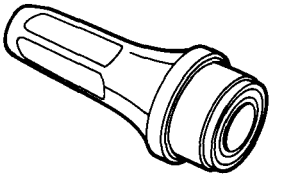

11

J 2619-02

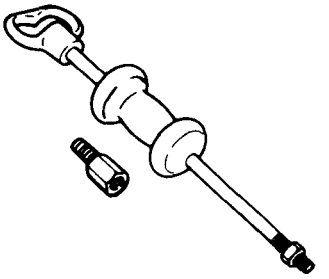

12

J 8092

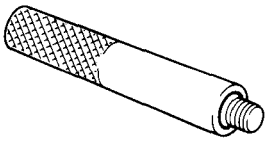

13

J 22888-D

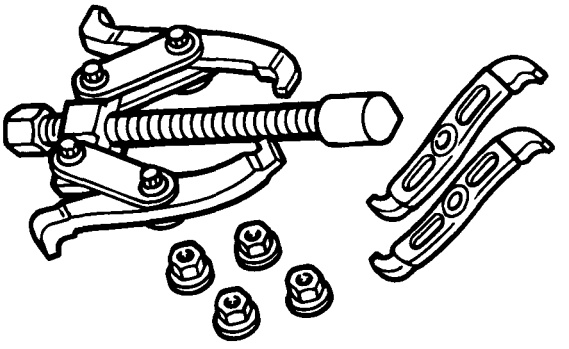

7 FRONT WHEEL BEARING RACE REMOVER
8 FRONT WHEEL BEARING RACE INSTALLER
9 WHEEL HUB OIL SEAL INSTALLER
10 STEERING KNUCKLE OIL SEAL INSTALLER
11 SLIDE HAMMER
12 DRIVER HANDLE
13 BALL JOINT REMOVER

NC3011-3C-JT-RS

SECTION 3D

REAR SUSPENSION

NOTICE: When fasteners are removed, always reinstall them at the same location from which they were removed. If a fastener needs to be replaced, use the correct part number fastener for that application. If the correct part number fastener is not available, a fastener of equal size and strength (or stronger) may be used. Fasteners that are not reused, and those requiring thread-locking compound, will be called out. The correct torque values must be used when installing fasteners that require them. It the above procedures are not followed, parts or system damage could result.

NOTICE: Never attempt to heat, quench or straighten any suspension part. Replace it with a new part, or damage to the part may result.

CONTENTS

Diagnosis 3D-1
General Description 3D-1
Rear Suspension Inspection 3D-3
On-Vehicle Service 3D-3
Shock Absorber 3D-3
Coil Spring 3D-4
Trailing Rod 3D-5
Trailing Rod Bushings 3D-6
Rear Suspension Upper Control Arm 3D-8
Rear Suspension Upper Control Arm Bushings 3D-10
Specifications 3D-11
Fastener Torques 3D-11
Service Parts Information 3D-12
Special Tools 3D-12

DIAGNOSIS

For diagnosis of the rear suspension system, refer to SECTION 3.

GENERAL DESCRIPTION

The rear suspension system is a rigid axle, coil spring-type, which consists of two coil springs, a rear axle, two shock absorbers, a single upper control arm, and two trailing rods (Figure 1).

The trailing rods are connected to the axle and body by bushings that allow the axle to move up and down with bushings at supporting points.

The rear suspension upper control arm is attached to the body and the axle (differential carrier) by bushings and a ball joint, preventing axle movement in a lateral direction. It also prevents the axle from rotating, which would occur when the brake is applied and when the vehicle accelerates.

Rear shock absorbers are attached between the body and axle to dampen road shock and vibration.

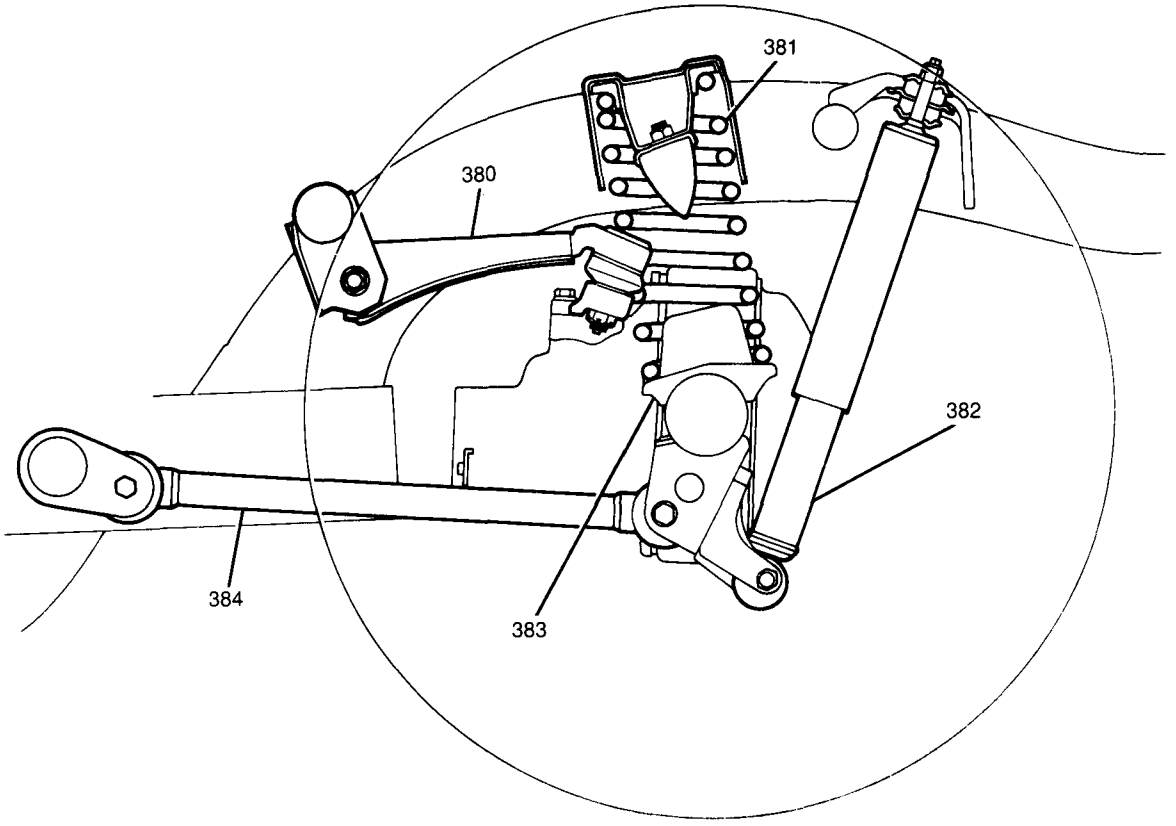

380 REAR SUSPENSION UPPER CONTROL ARM
381 COIL SPRING
382 SHOCK ABSORBER
383 REAR AXLE HOUSING
384 TRAILING ROD

NC0386-3D-JT-RS

Figure 1 Rear Suspension System

REAR SUSPENSION INSPECTION

Ride Complaints

If complaints of a hard ride are encountered, the first items to investigate are tire pressure, trim height, and strut condition; refer to SECTION 3. If these are correct, the amount of friction in the rear suspension should be checked.

Excessive Friction Check

1. Measure the distance from the ground to the center of the bumper.
2. With the aid of another technician, lift up on rear bumper and raise vehicle as high as possible. Slowly release the bumper and allow vehicle to assume normal trim height.
3. Measure the distance from ground to center of bumper. The difference between the two measurements should be less than 12.7 mm (0.5-inch). If the difference exceeds this limit, inspect the suspension arms, struts, and ball joints for damage or wear.

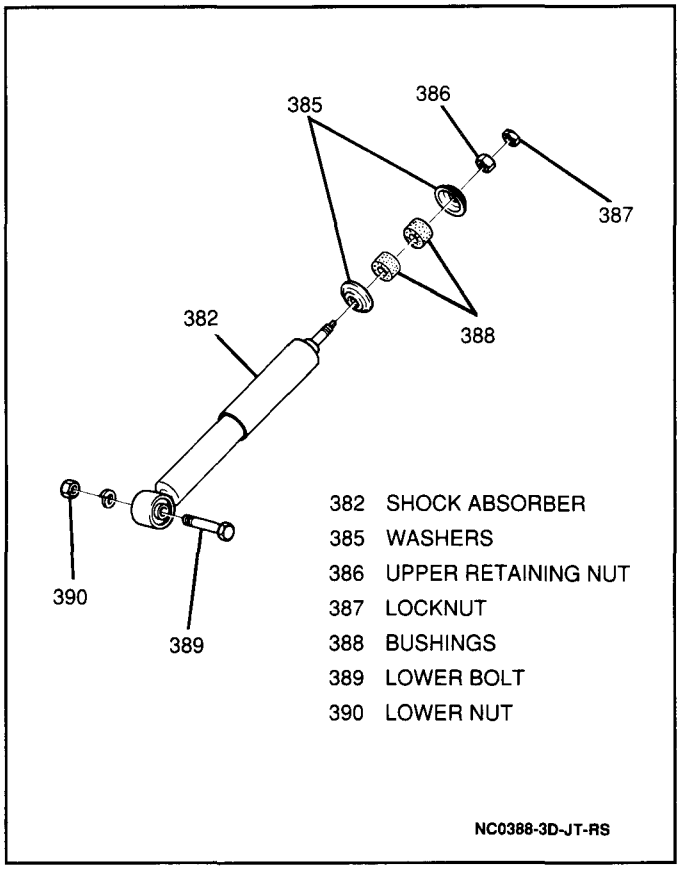

Figure 2 Shock Absorber

ON-VEHICLE SERVICE

SHOCK ABSORBER

Figures 2 through 5

The shock absorbers are non-adjustable, non-refillable, and cannot be disassembled. The only service these shock absorbers require is replacement when damaged, leaking fluid, or when loss of resiliency has occurred.

Remove or Disconnect

- Raise and suitably support vehicle. Refer to SECTION 0A.
- Support rear axle housing by using floor jack to prevent it from lowering (Figure 3).

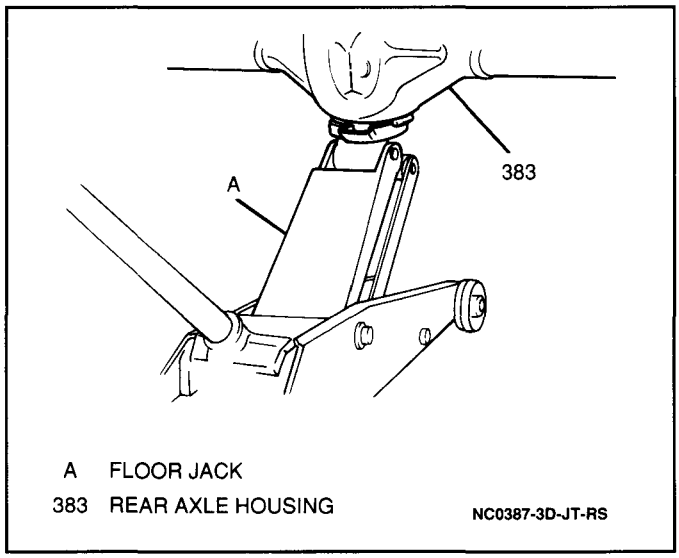

Figure 3 Rear Axle Housing Support

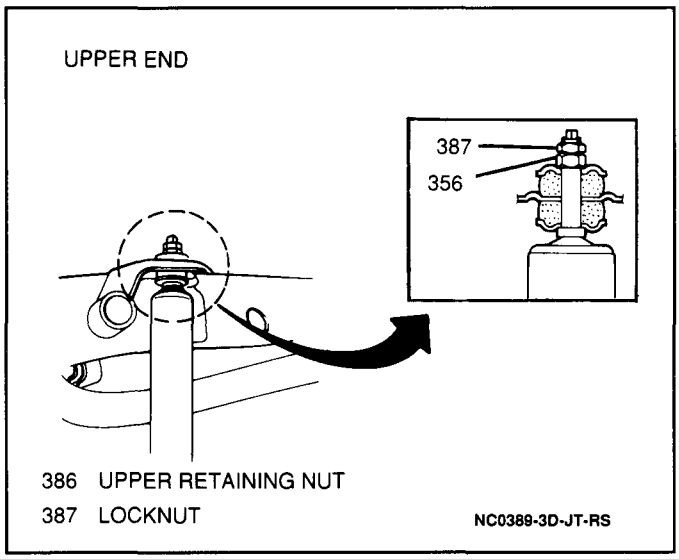

Figure 4 Shock Absorber (Upper End)

1. Shock absorber locknut and upper retaining nut (Figure 4).
2. Shock absorber lower mounting nut and bolt.
3. Shock absorber from vehicle.

Install or Connect

1. Shock absorber to vehicle; secure with lower bolt and nut. Bolt head should face body. Do not tighten at this time (Figure 5).

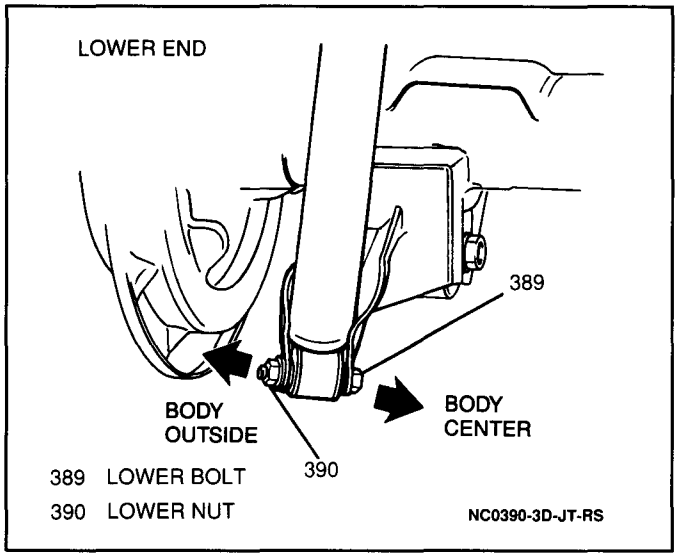

Figure 5 Shock Absorber (Lower End)

2. Shock absorber upper retaining nut and locknut.

Tighten

- Shock absorber upper retaining nut to 29 N·m (21 lb.ft.).
- Shock absorber locknut to 29 N·m (21 lb.ft.).
- Shock absorber lower bolt and nut to 85 N·m (63 lb.ft.).

- Remove floor jack from axle housing.
- Lower vehicle.

COIL SPRING

Figures 3, 5 and 6

Remove or Disconnect

- Raise and suitably support vehicle. Refer to SECTION 0A.
1. Wheel and tire. Refer to SECTION 3E.
- Support rear axle housing with floor jack (Figure 3).
2. Shock absorber lower mounting bolt and nut.
3. Coil spring, by lowering rear axle housing support jack enough to allow removal of the spring.

Install or Connect

1. Coil spring to vehicle, making sure it is properly seated at the axle and at the body (Figure 6).

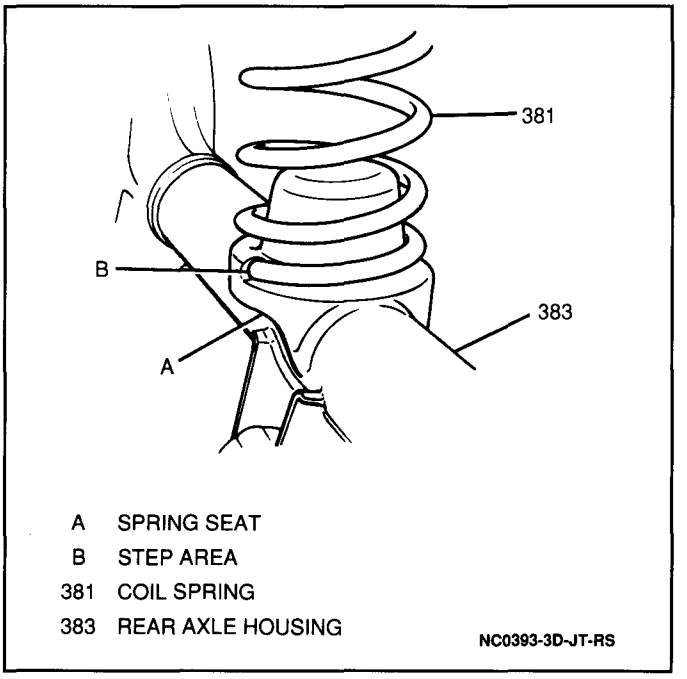

Figure 6 Coil Spring Mounting

- Raise floor jack to compress spring.
2. Shock absorber lower mounting bolt and nut. Bolt head should face body (Figure 5).

Tighten

- Shock absorber lower bolt and nut to 85 N·m (63 lb.ft.).

- Remove floor jack from axle housing.
3. Wheel and tire. Refer to SECTION 3E.
- Lower vehicle.

TRAILING ROD

Figures 3, 7, 8, and 9

Remove or Disconnect

- Raise and suitably support vehicle. Refer to SECTION 0A.

1. Wheel and tire. Refer to SECTION 3E.
2. Parking brake cable hanger from trailing rod by removing nut and bolt (Figure 7).

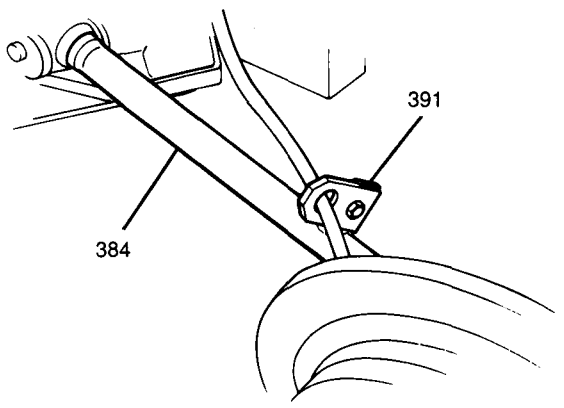

384 TRAILING ROD
391 PARKING BRAKE CABLE HANGER NC0395-3D-JT-RS

Figure 7 Parking Brake Cable Hanger

- Support rear axle housing by using floor jack (Figure 3).

3. Trailing rod rear nut, bolt and washer.
4. Trailing rod front nut, bolt and washer and trailing rod from vehicle.

Install or Connect

Inspect

- If both trailing rods were removed, inspect rods to distinguish between right and left rod prior to installation (Figure 8).

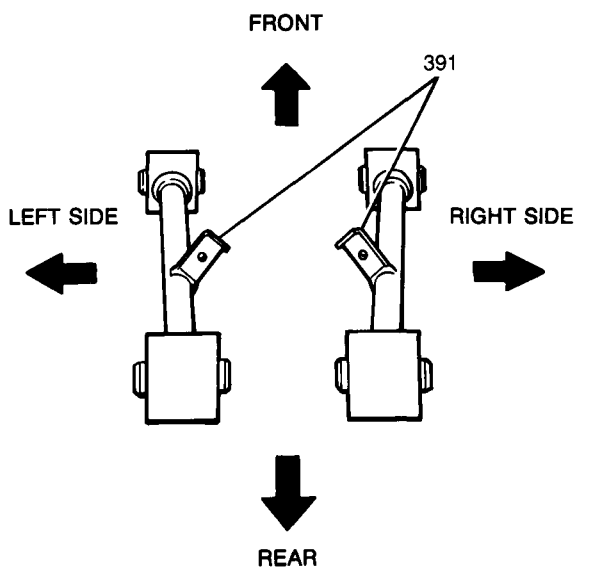

391 PARKING BRAKE CABLE HANGER NC0400-3D-JT-RS

Figure 8 Right and Left Trailing Rods

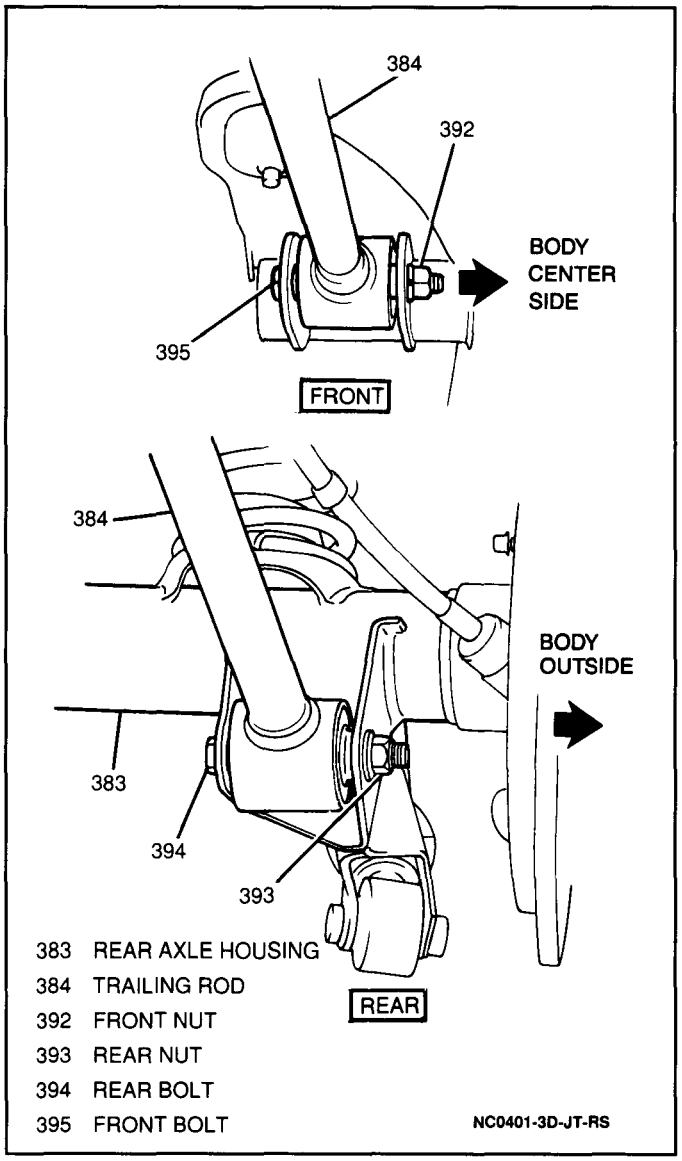

Figure 9 Trailing Rod Installation

1. Trailing rod to vehicle body and rear axle housing; secure with with front and rear nuts, bolts and washers (Figure 9).

Tighten

- Trailing rod front and rear nuts and bolts to 90 N·m (66 lb.ft.).

- Remove floor jack from rear axle housing.

2. Parking brake cable hanger to trailing rod; secure with nut and bolt.

Tighten

- Parking brake cable nut and bolt to 10 N·m (89 lb.in.).

3. Wheel and tire. Refer to SECTION 3E.

- Lower vehicle.

Trailing Rod Bushings

Figures 10, 11 and 12

Remove or Disconnect

Tools Required:
J 29792 Front Control Arm Bushing Service Set
J 28685 Rear Suspension Bushing Service Set

- Raise and suitably support vehicle. Refer to SECTION 0A.

1. Trailing rod from vehicle. Refer to "Trailing Rod" earlier in this section.

- Mount trailing rod into a press with a J 29792-1, a J 29792-3 and a J 28685-2 (Figure 10).

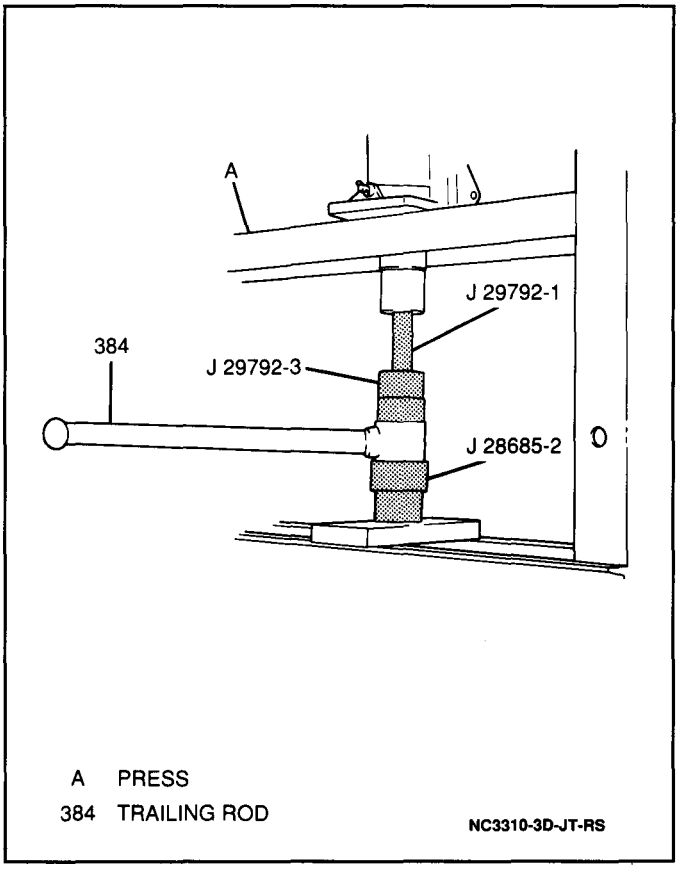

Figure 10 Removing Trailing Rod Bushing — 1 of 2

- Press bushing out until it bottoms into the J 28685-2.
- Release pressure from press. Remove the J 28685-2 and install a J 28685-1. Press the remainder of the bushing out of the trailing rod (Figure 11).

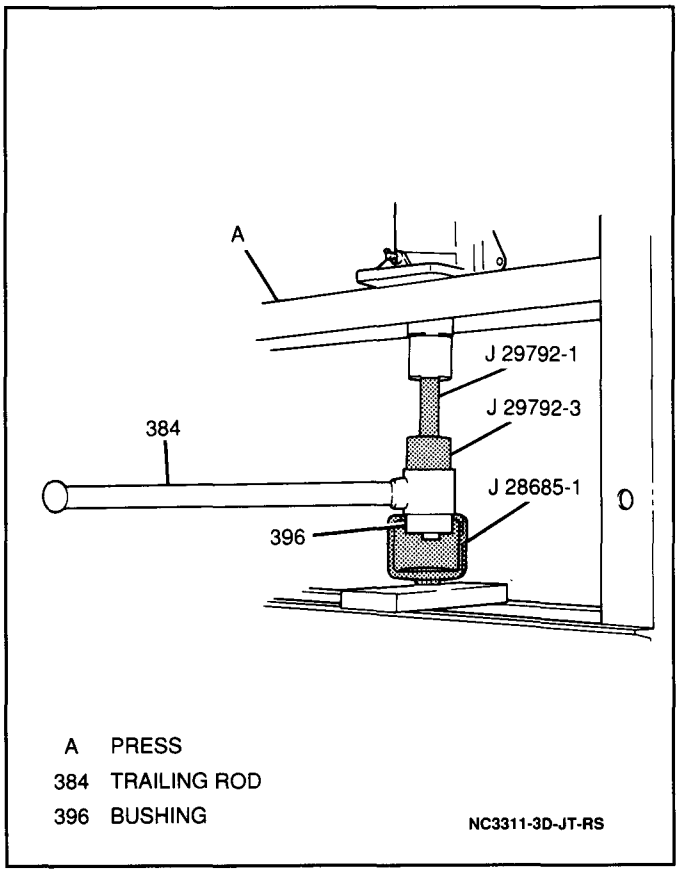

Figure 11 Removing Trailing Rod Bushing — 2 of 2

Install or Connect

Tools Required:
J 29792 Front Control Arm Bushing Service Set
J 9519-9 Bearing Remover

- Mount trailing rod into press with a J 29792-1, a J 29792-3 and a J 9519-9.

1. New bushing into trailing rod using press (Figure 12).

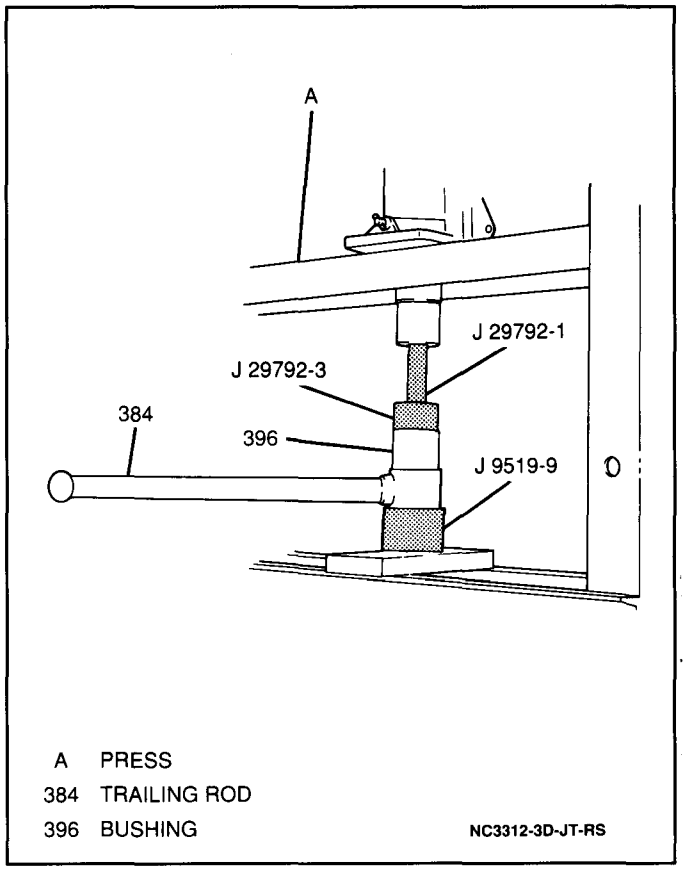

Figure 12 Installing Trailing Arm Bushing

2. Trailing rod to vehicle. Refer to "Trailing Rod" earlier in this section.

- Lower vehicle.

REAR SUSPENSION UPPER CONTROL ARM

Figures 3 and 13 through 18

Remove or Disconnect

Tool Required:
J 22888 Universal Puller

- Raise and suitably support vehicle. Refer to SECTION 0A.

1. Wheel and tire. Refer to SECTION 3E.

- Support rear axle housing with a floor jack (Figure 3).

2. Four bolts and ball joint boss from differential carrier (Figure 13).

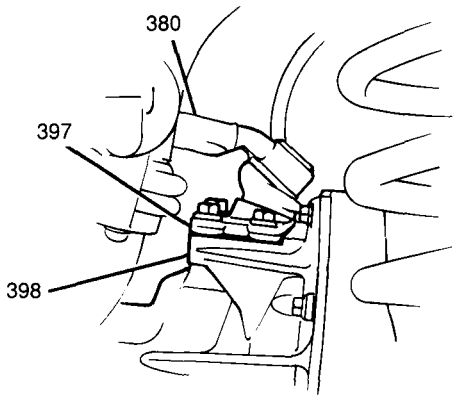

380 REAR SUSPENSION UPPER CONTROL ARM
397 BALL JOINT BOSS
398 DIFFERENTIAL CARRIER
NC0404-3D-JT-RS

Figure 13 Ball Joint Boss

3. Upper control arm through bolts and nuts; remove rear suspension upper control arm from body (Figure 14).

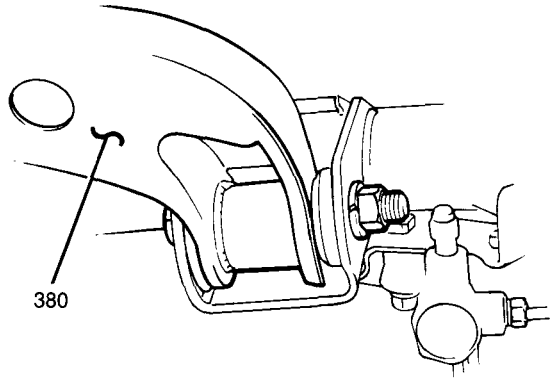

380 REAR SUSPENSION UPPER CONTROL ARM
NC0405-3D-JT-RS

Figure 14 Rear Suspension Upper Control Arm

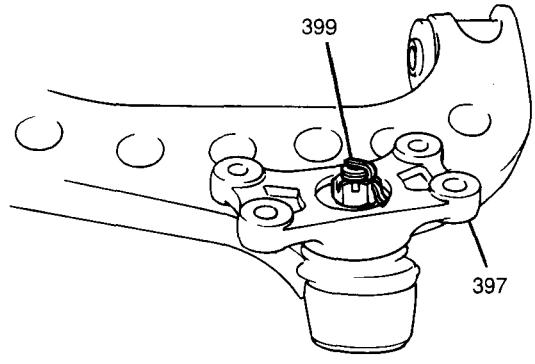

397 BALL JOINT BOSS
399 COTTER PIN
NC0406-3D-JT-RS

Figure 15 Cotter Pin

4. Cotter pin from ball joint stud (Figure 15).

- Mount ball joint boss in a table vise.

5. Castle nut from ball joint boss (Figure 16).

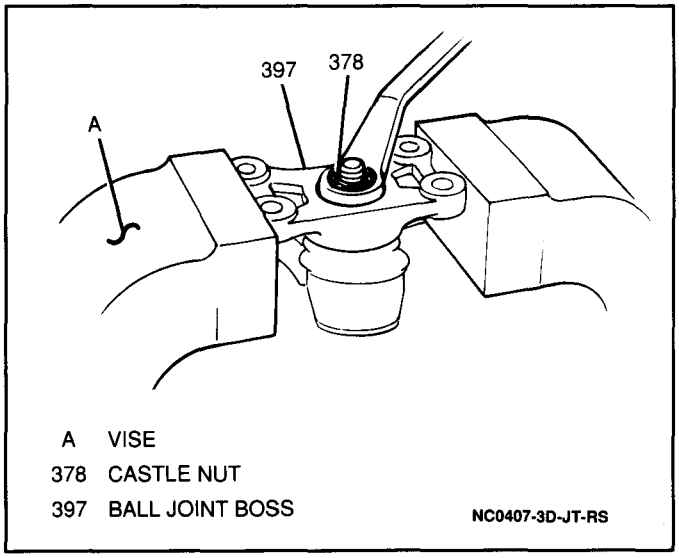

Figure 16 Removing Castle Nut

6. Ball joint boss from ball joint stud using a J 22888 with appropriate tips (Figure 17).

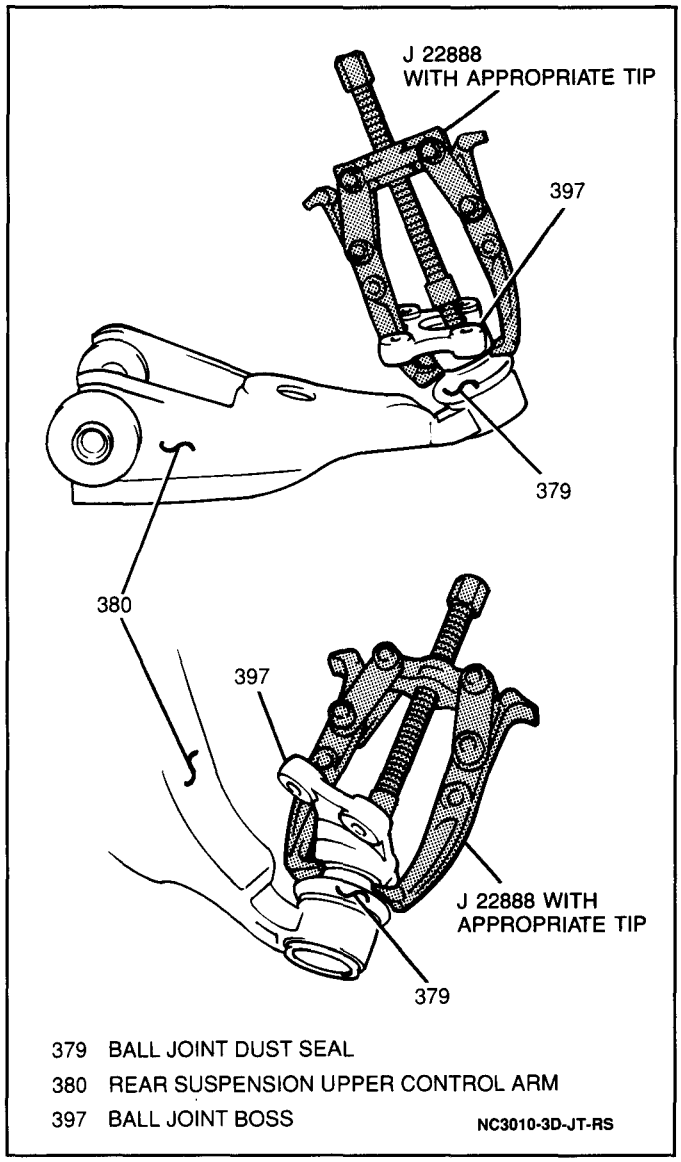

Figure 17 Removing Ball Joint Boss

7. Dust seal retainer and dust seal from ball joint (Figure 18).

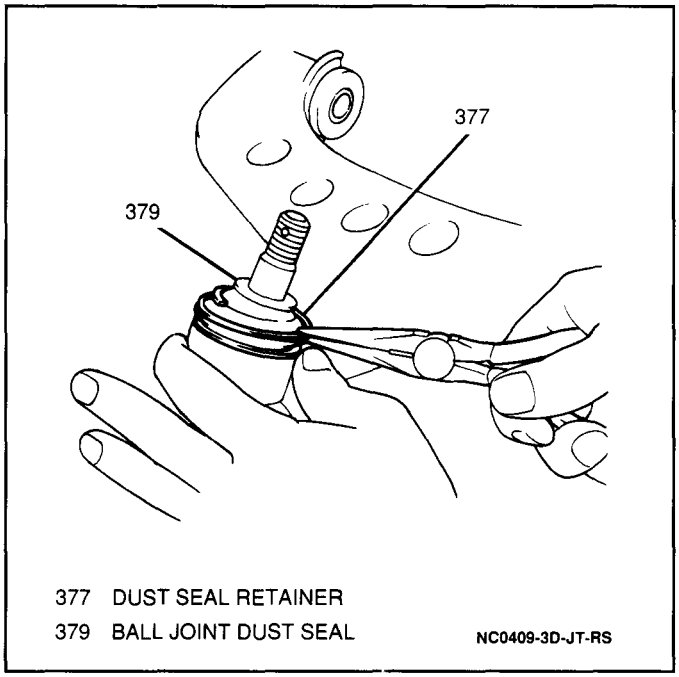

Figure 18 Removing Dust Seal Retainer

Install or Connect

1. New dust seal and retainer to ball joint.
2. Ball joint boss to ball joint stud; secure with castle nut.

Tighten

- Ball joint castle nut to 58 N·m (43 lb.ft.).

3. New cotter pin to ball joint stud.
4. Upper upper control arm to body; secure with through bolts and nuts. Do not tighten fully.
5. Ball joint boss to differential carrier; secure with four bolts.

Tighten

- Ball joint boss bolts to 50 N·m (37 lb.ft.).
- Rear suspension upper control arm nuts and bolts to 90 N·m (66 lb.ft.).

- Remove floor jack from axle housing.

6. Wheel and tire. Refer to SECTION 3E.

- Lower vehicle.

Rear Suspension Upper Control Arm Bushings

Figures 19 and 20

Remove or Disconnect

Tools Required:
J 29792 Front Control Arm Bushing Service Set
J 35561 Front Control Arm Bushing Service Set

1. Rear suspension upper control arm from vehicle. Refer to "Rear Suspension Upper Control Arm" earlier in this section.

- Mount upper control arm into a press with a J 29792-1 and a J 35561-2 (Figure 19).

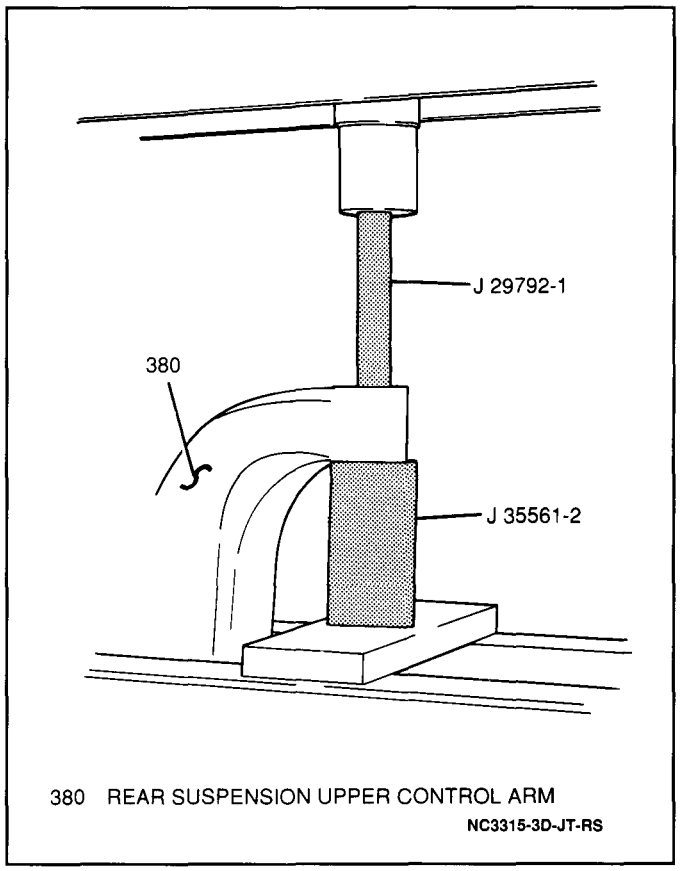

Figure 19 Removing Rear Suspension Upper Control Arm Bushing

2. Bushing from upper control arm using a press.

Install or Connect

Tools Required:
J 29792-1 Front Control Arm Bushing Service Set
J 35561-2 Front Control Arm Bushing Service Set

1. New bushing into upper control arm using a press, a J 29792-1 and a J 35561-2 (Figure 20).

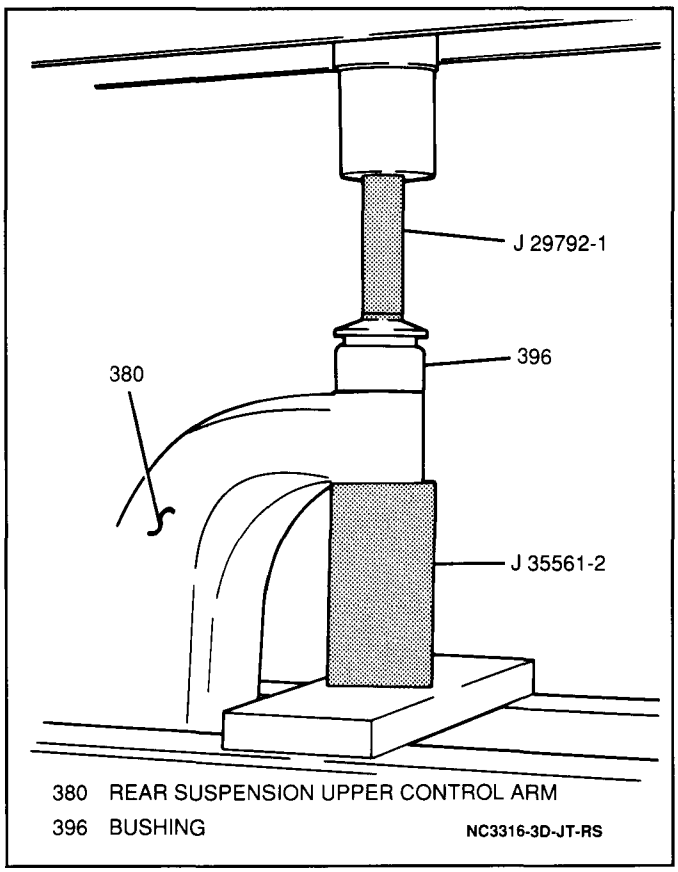

Figure 20 Installing Rear Suspension Upper Control Arm Bushing

2. Upper control arm to vehicle. Refer to "Rear Suspension Upper Control Arm" earlier in this section.

SPECIFICATIONS

FASTENER TORQUES

Shock Absorber Locknut	29 N·m (21 lb.ft.)
Shock Absorber Upper Retaining Nut	29 N·m (21 lb.ft.)
Shock Absorber Lower Bolt and Nut	85 N·m (63 lb.ft.)
Parking Brake Cable Nut and Bolt	10 N·m (89 lb.in.)
Trailing Rod Front and Rear Nuts and Bolts	90 N·m (66 lb.ft.)
Ball Joint Boss Bolts	50 N·m (37 lb.ft.)
Rear Suspension Upper Control Arm Nuts and Bolts	90 N·m (66 lb.ft.)
Ball Joint Castle Nut	58 N·m (43 lb.ft.)

SERVICE PARTS INFORMATION

Component Name Used in Section 3D	Reference Name in Service Parts Catalog	Group Number
Shock Absorber	Absorber, Rr Shock	7.345
Coil Spring	Spring, Rr Coil	7.503
Trailing Rod	Rod, Rr Axle Tie	5.415
Trailing Rod Bushings	Bushings, Rr Axle Tie Rod	5.417
Rear Suspension Upper Control Arm	Arm, Rr Susp Upper Control	5.382
Rear Suspension Upper Control Arm Bushings	Bushings, Rear Control Arm	5.381
Ball Joint Boss	Mount, Rr Susp Support	5.380

SPECIAL TOOLS

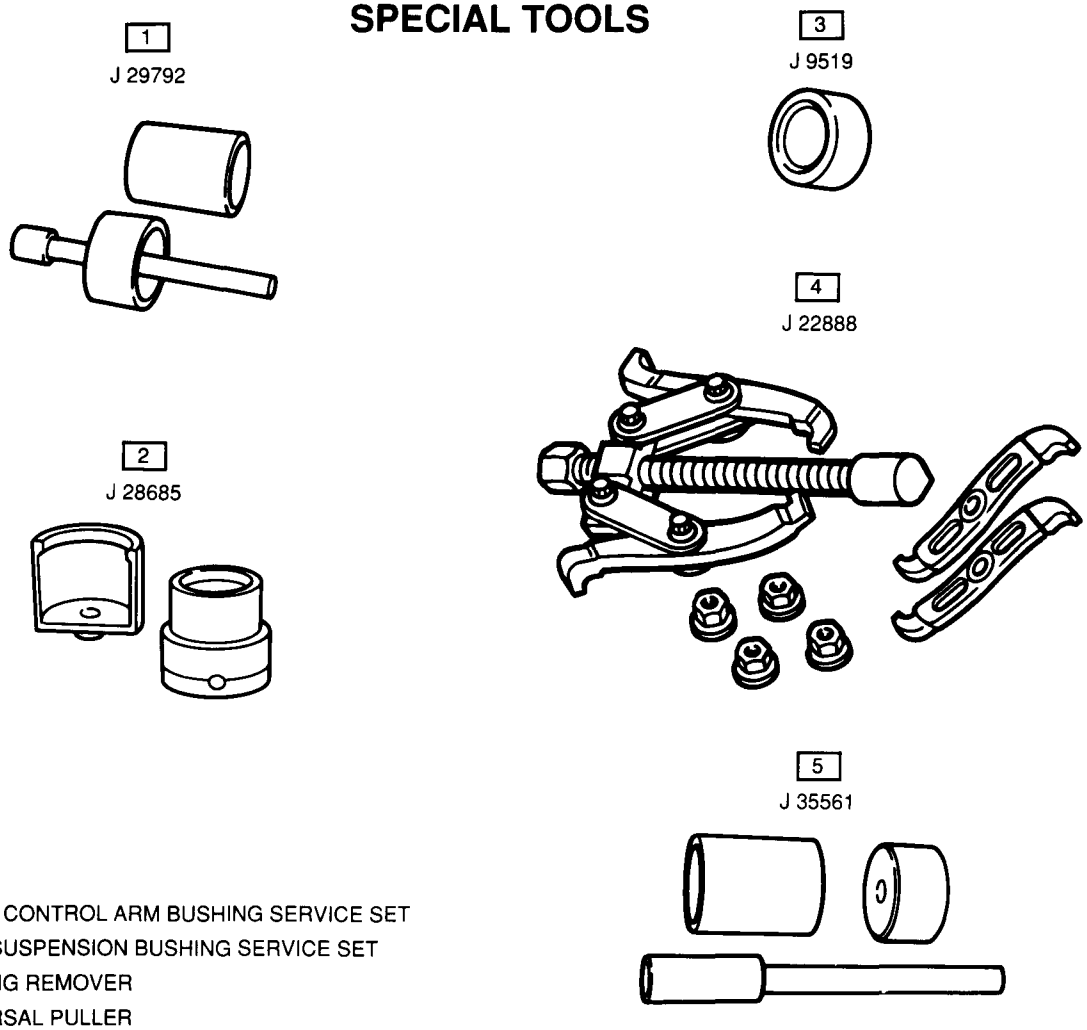

1 FRONT CONTROL ARM BUSHING SERVICE SET
2 REAR SUSPENSION BUSHING SERVICE SET
3 BEARING REMOVER
4 UNIVERSAL PULLER
5 FRONT CONTROL ARM BUSHING SERVICE SET

NC3313-3D-JT-RS

SECTION 3E

TIRES AND WHEELS

NOTICE: When fasteners are removed, always reinstall them at the same location from which they were removed. If a fastener needs to be replaced, use the correct part number fastener for that application. If the correct part number fastener is not available, a fastener of equal size and strength (or stronger) may be used. Fasteners that are not reused, and those requiring thread-locking compound, will be called out. The correct torque values must be used when installing fasteners that require them. If the above conditions are not followed, parts or system damage could result.

CONTENTS

Diagnosis 3E-1
General Description 3E-1
Replacement Tires 3E-1
All Season Tires 3E-2
P-Metric Tires 3E-2
Tire Placard 3E-3
Wheels 3E-3
On-Vehicle Service 3E-3
Wheel Repair 3E-3
Metric Wheel Nuts and Studs 3E-3
Tire Inflation 3E-3
Wheel Installation 3E-4
Wheel Removal 3E-4
Tire Rotation 3E-5
Tire Mounting and Dismounting 3E-6
Tire Repair 3E-6
Measuring Wheel Runout 3E-6
Spare Tire 3E-6
Balancing Tire and Wheel 3E-7
General Balance Precautions 3E-7
Off-Vehicle Balancing 3E-8
Wheel Balance Weights 3E-8
Correcting Non-Uniform Tires 3E-8
Specifications 3E-8
Wheel Nut Torque 3E-8
Service Parts Information 3E-8

DIAGNOSIS

For tire and wheel diagnosis, refer to SECTION 3.

GENERAL DESCRIPTION

This vehicle is equipped with P205/75R15M/S tires on four-wheel drive models, and P195/75R15M/S on two-wheel drive models.

REPLACEMENT TIRES

Figure 1

A tire performance criteria (TPC) specification number is molded in the sidewall, near the tire size on all original equipment tires. This specification number assures that the tire meets GM's performance standards for traction, endurance, dimensions, noise, handling, rolling resistance and others. Usually, a specific TPC number is assigned to each tire size.

CAUTION: Do not mix different types of tires on the same vehicle such as radial, bias and bias-belted tires except in an emergency, because vehicle handling may be seriously affected and may result in loss of control.

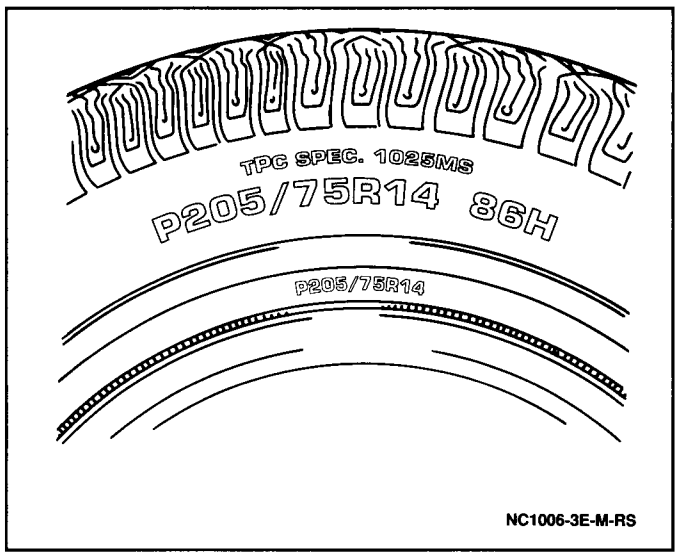

Figure 1 Tire Identification — Typical

Replacement tires should be of the same size, load range and construction as those originally on the vehicle. This can best be accomplished by using tires of the same TPC specification number. Use of any other tire size or construction type may seriously affect ride, handling, speedometer/odometer calibration, vehicle ground clearance and tire clearance to the body and chassis. This does not apply to the spare furnished with the vehicle.

It is recommended that new tires be installed in pairs on the same axle. In order to equalize braking traction, if it is necessary to replace only one tire, the replacement should be paired with the tire that has the most tread.

Although they may appear different in tread design, tires built by different manufacturers with identical TPC specification numbers can be intermixed on the same vehicle.

Tires should be replaced when:

1. They are worn to a point where 1.6 mm (0.063-inch) or less tread remains, or the cord or fabric is showing. To help detect this condition, tires have built-in tread wear indicators that appear between the tread grooves when the tread is worn to 1.6 mm (0.063-inch) or less. When the indicators appear in two or more adjacent grooves at three spot around the tire, the tire should be replaced.
2. The tread or sidewall is cracked, cut or snagged deeply enough to expose the cord or fabric.
3. The tire has a bump, bulge or split. Slight sidewall indentations are normal and should not affect ride.
4. The tire has a puncture, cut or other damage that cannot be correctly repaired because of the size or location of the damage.

ALL SEASON TIRES

Figure 1

Most GM vehicles are now equipped with steel belted all season radial tires as standard equipment. These tires qualify as snow tires, with a 37 percent higher average rating for snow traction than the non-all seasons previously used. Performance in other areas, such as wet traction, rolling resistance, tread life, and air retention is also slightly better. The above changes are the results of improvements in tread design and tread compounds. These tires are identified by the symbol "MS." This symbol follows the size and is molded with the size into the tire sidewall. The suffix "MS," which follows the TPC specification number, is also molded into the sidewall.

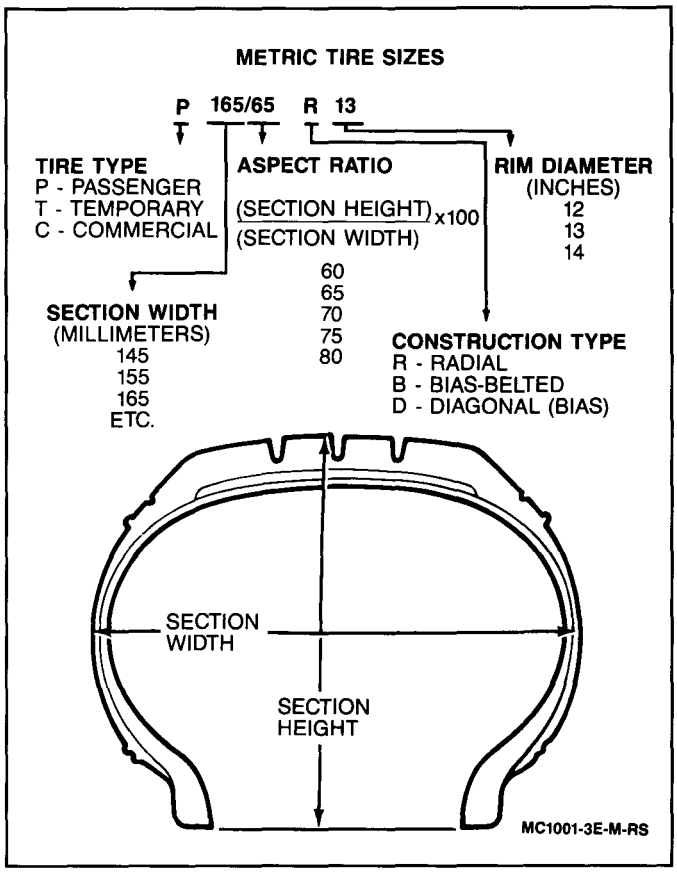

Figure 2 Metric Tire Size Format

P-METRIC TIRES

Figures 2 and 3

All GM vehicles now use P-metric sized tires. P-metric tires are available in two load ranges: standard load (241 kPa/35 psi maximum), and extra load (283 kPa/41 psi maximum). Most passenger car tires are standard load.

Most P-metric tire sizes do not have exact corresponding alphanumeric tire sizes. For this reason, replacement tires should be the same TPC specification number (same size, load range and construction) as those originally on the vehicle. If P-metric tires must be replaced with other sizes, a tire dealer should be consulted. Tire companies can better recommend the closest match of alphanumeric to P-number sizes with their own tire lines.

Refer to the tire placard located in the left front door lock pillar (Figure 3).

RECOMMENDED

	FRONT	REAR	SPARE TIRE
TIRE SIZE	P165/65R13		T115/70014
COLD TIRE PRESSURE AT MAX. LOAD	26PSI 180 kPa		60 PSI 420 kPa

VEHICLE CAPACITY

MAX LOAD (LBS)	688 (OCCUPANTS PLUS LUGGAGE)	
OCCUPANTS	FRONT 2	REAR 0

SEE OWNER'S MANUAL FOR ADDITIONAL INFORMATION

LC1003-3E-MC-RS

Figure 3 Tire Placard — Typical

TIRE PLACARD

Figure 3

The tire placard is located on the left door lock pillar and should be referred to for tire information. The placard lists the maximum load capacity, recommended tire size and cold tire pressure at maximum load (including spare).

WHEELS

Standard equipment wheels are 15 x 15½ JJ steel wheels. Replacement wheels must be equivalent to the original equipment wheels in load capacity, diameter, rim width, offset and mounting configuration. A wheel of improper size or type may affect wheel and bearing life, brake cooling, speedometer/odometer calibration, vehicle ground clearance and tire clearance to the body and chassis.

ON-VEHICLE SERVICE

WHEEL REPAIR

Wheel repairs that use welding, heating or peening are not approved. Wheels must be replaced if they are dented, have excessive lateral or radial runout, leak air through welds, have elongated bolt holes, if wheel nuts will not stay tight, or if wheel nuts are heavily rusted. An inner tube is not an acceptable repair for leaky wheels or tires.

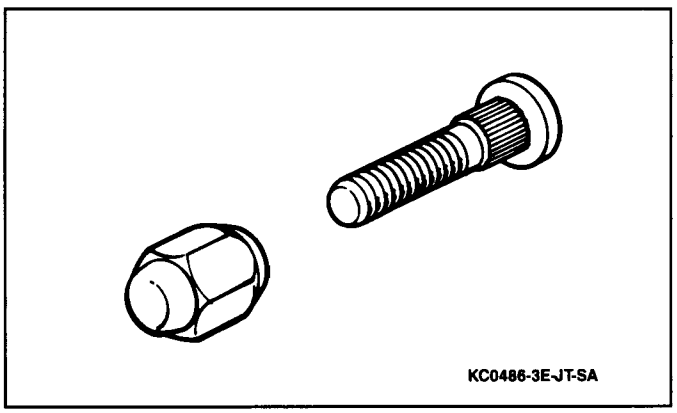

Figure 4 Metric Stud and Nut

METRIC WHEEL NUTS AND STUDS

Figure 4

This vehicle uses metric wheel nuts and wheel studs. The thread size of the metric wheel nuts and studs is "M12 x 1.25." This stands for:

M = Metric
12 = Diameter in millimeters
1.25 = Millimeters per thread

The nut will have the word "Metric" stamped on the face and the stud will have the letter "M" stamped into the threaded end. The word "Metric" is stamped on the head of the stud.

If a broken stud is found, refer to SECTION 3C for front wheel stud replacement or SECTION 3D for rear wheel stud replacement.

TIRE INFLATION

Figures 3 and 5

The pressure recommended for any model is carefully calculated to give a satisfactory ride, stability, steering, tread wear, tire life, load carrying capacity, and resistance to bruises.

The metric term for tire inflation pressure is the kilopascal (kPa). Tire pressure may be printed in both kPa and psi. One psi equals 6.9 kPa. Refer to the tire pressure conversion chart (Figure 5) for equivalent kPa-psi measurements. Refer to the tire placard located on the left door lock pillar for tire inflation specifications (Figure 3).

TIRE PRESSURE CONVERSION CHART (KILOPASCALS TO PSI)

kPa	psi	kPa	psi
140	20	215	31
145	21	220	32
155	22	230	33
160	23	235	34
165	24	240	35
170	25	250	36
180	26	275	40
185	27	310	45
190	28	345	50
200	29	380	55
205	30	415	60

Conversion: 6.9 kPa = 1 psi

NC1007-3E-M-RS

Figure 5 Tire Pressure Conversion Chart

Tire pressure, with tires cold (after vehicle has set for three hours or more or driven less than one mile), should be checked monthly or before any extended trip. The front and rear tires require 160 kPa (23 psi) of air. It is normal for tire pressure to increase 28 kPa (4 psi) when the tires become hot during driving. **Do not** bleed or reduce tire pressure after driving. Bleeding reduces the cold inflation pressure.

Valve caps should be on the valves to keep dust and water out.

Tires inflated to higher than recommended pressure can cause:
- Hard ride.
- Tire bruising or carcass damage.
- Rapid tread wear at center of tire.
- Reduced handling.

Tires inflated to a lower than recommended pressure can cause:
- Tire squeal on turns.
- Hard steering.
- Rapid and uneven wear on the edges of the tread.
- Tire rim bruises and rupture.
- Tire cord damage.
- High tire temperatures.
- Reduced handling.
- Reduced fuel economy.

Unequal tire pressure on the same axle can cause:
- Uneven braking.
- Steering lead.
- Reduced handling.
- Swerve on acceleration.

WHEEL INSTALLATION

Figure 6

NOTICE: Before installing wheels, remove any build-up of corrosion on the wheel mounting surface and brake drum or rotor mounting surface by scraping and wire brushing. Installing wheels without good metal-to-metal contact at the mounting surfaces can cause wheel nuts to loosen, which can later allow a wheel to come off while the vehicle is moving. Wheel nuts must be tightened in sequence and to proper torque to avoid bending the wheel, brake drum or rotor.

1. Install wheel to vehicle; secure with wheel nuts.

Important
- Wheel nuts must be tightened in sequence and to proper torque to avoid bending the wheel, brake drum or rotor. Refer to Figure 6.

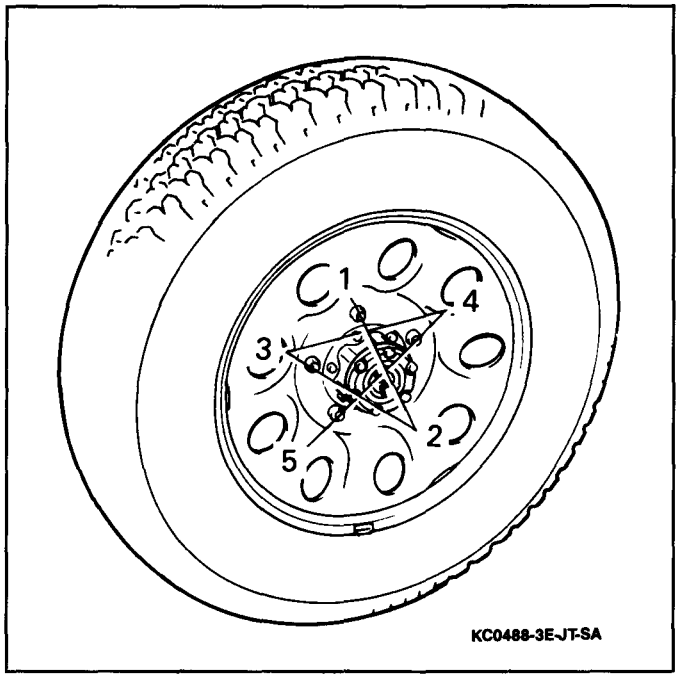

Figure 6 Wheel Nut Tightening Sequence

Tighten
- Wheel nuts to 95 N·m (70 lb.ft.).

2. Lower vehicle.

Inspect
- Wheel alignment and matching of tread wear. Adjust as necessary. Refer to SECTION 3A.

WHEEL REMOVAL

1. Loosen wheel nuts by approximately 180 degrees (one-half turn).
2. Raise and suitably support vehicle. Refer to SECTION 0A.
3. Remove wheel nuts and wheel from vehicle.

Difficult to Remove Wheels

Sometimes wheels can be difficult to remove from the vehicle due to foreign material or a tight fit between the wheel center hole and the hub or rotor. These wheels can be removed without damage as follows:

1. Tighten all wheel nuts on the affected wheel, then loosen each wheel nut two turns.
2. Lower vehicle.
3. Rock the vehicle from side to side as hard as possible using one or more person's body weight to loosen the wheel. Rock the vehicle from "D" (automatic transmission) or "1" (manual transmission) to "R" allowing the vehicle to move several feet in each direction. Apply quick, hard pumps on the brake pedal to loosen the wheel.
4. Raise and suitably support vehicle. Refer to SECTION 0A.
5. Remove the wheel nuts and the wheel. Penetrating oil has not been found to be effective in removing tight wheels; however, if it is used, it should be applied sparingly to the wheel's center hole area only.

   CAUTION: Do not allow the penetrating oil to get on the vertical surfaces between the wheel and the drum or rotor because penetrating oil in this area could cause the wheel to work loose as the vehicle is driven, resulting in loss of control.

   NOTICE: NEVER use heat to loosen a tight wheel. It can shorten the life of the wheel, wheel nuts and wheel bearings. Excessive force, such as hammering the wheel or tire, can also cause damage and is not recommended. Slight tapping of the tire side wall, such as with one's hand or a rubber mallet, is normally acceptable.

TIRE ROTATION

Figure 7

To equalize wear, rotate tires using the pattern in Figure 7. Radial tires should be rotated every 12 500 km (7,500 miles). After rotation, be sure to check wheel nut torque and tire pressure.

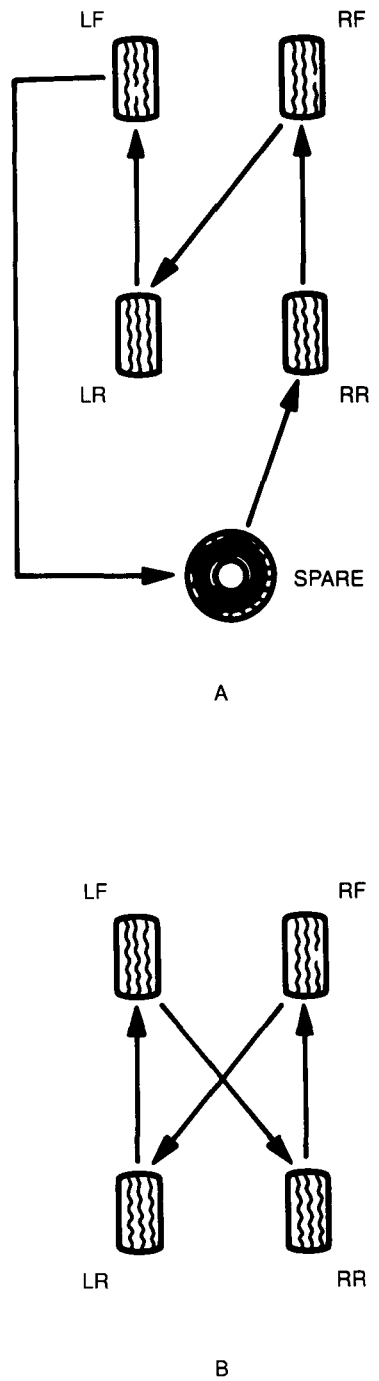

A WITH FULL-SIZE SPARE WHEEL

B IF SPARE WHEEL DOES NOT MATCH YOUR OTHER WHEELS

NC1004-0B-JT-RS

Figure 7 Tire Rotation Pattern

TIRE MOUNTING AND DISMOUNTING

Use a tire changing machine to mount or dismount tires. Follow the equipment manufacturer's instructions. Do not use hand tools or tire irons to change tires as they may damage the tire beads or wheel rim.

Wheel rim bead seats should be cleaned with a wire brush or coarse steel wool to remove lubricants, old rubber and light rust. Before mounting a tire, the bead area should be well lubricated with an approved tire lubricant.

After mounting, inflate the tire to 220 kPa (32 psi) so that beads are completely seated. Install valve core and inflate to proper pressure.

CAUTION: To avoid serious personal injury, do not stand over tire when inflating. Bead may break when it snaps over safety hump. Do not exceed 220 kPa (32 psi) pressure when inflating any tire if beads are not seated. If 220 kPa (32 psi) pressure will not seat beads, deflate, relubricate the beads and reinflate. Overinflation may cause the bead to break and cause serious personal injury.

TIRE REPAIR

There are many different materials on the market used to repair tires. Manufacturers have published detailed instructions on how and when to repair tires. These instructions can be obtained from the tire manufacturer if they are not included with the repair kit.

MEASURING WHEEL RUNOUT

Wheel runout should be measured with an accurate dial indicator. Measurements may be taken with wheel installed on or off the vehicle using an accurate mounting surface, such as on a wheel balancer. Measurements may also be taken with or without the tire mounted on the wheel.

Radial runout and lateral runout should be measured on both the inboard rim flanges. With the dial indicator firmly in position, slowly rotate the wheel one revolution and record the total indicator reading. If any measurement exceeds specifications, and there is a vibration that wheel balancing will not correct, the wheel should be replaced. Disregard any indicator readings due to welds, paint runs, scratches, etc. For procedures on measuring runout, refer to SECTION 3A.

SPARE TIRE

Figure 8

The spare is a full-size radial tire, identical in size to the other four tires, and located on the rear door. As with all the other tires on the vehicle, this wheel and/or tire must be replaced with equipment that has the same load capacity, diameter, rim width, offset and mounting configuration as the original wheel and/or tire.

CAUTION: Operating a vehicle with wheels or tires of improper size may result in loss of control, personal injury or property damage.

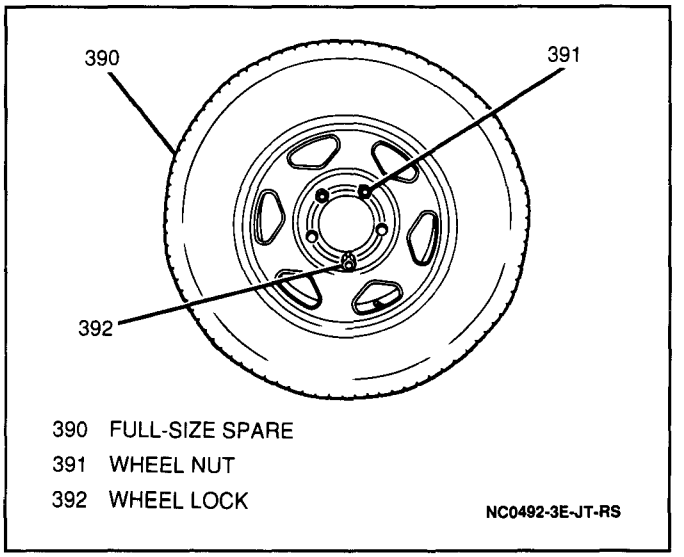

Figure 8 Full-Size Spare

Remove or Disconnect

- Unlock wheel lock and slide off lock piece.

1. Wheel nuts with lug wrench and remove spare tire from rear door.

Install or Connect

1. Spare tire to tailgate; secure with wheel nuts.
2. Lock piece to spare tire, relocking wheel to rear door.

BALANCING TIRE AND WHEEL

Figures 9 and 10

There are two types of wheel and tire balance: static and dynamic. Static balance is the equal distribution of weight around the wheel (Figure 9). Assemblies that are statically unbalanced, cause a bouncing action called tramp. This condition will eventually cause uneven tire wear.

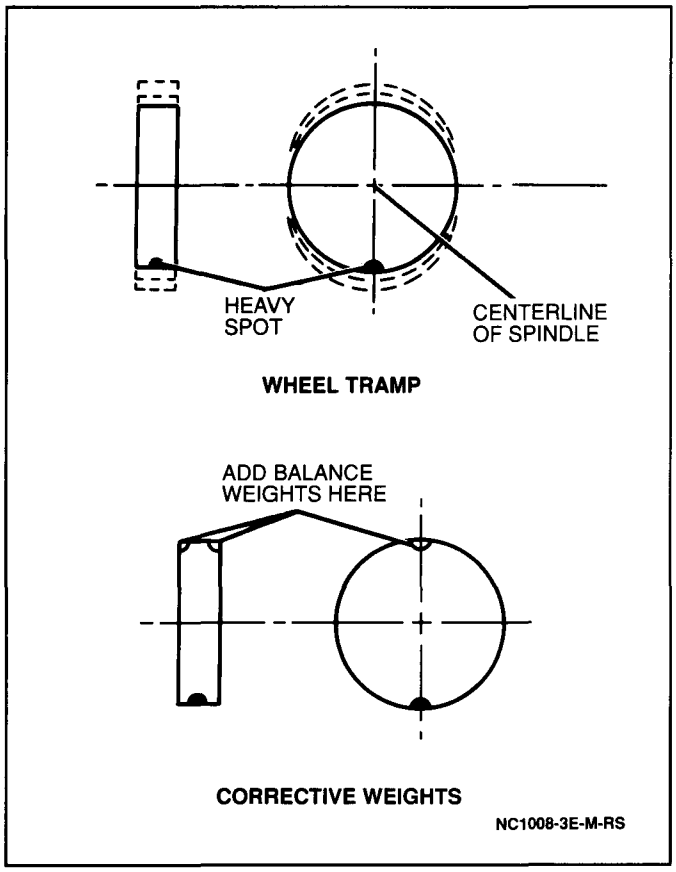

Figure 9 Static Unbalance Correction

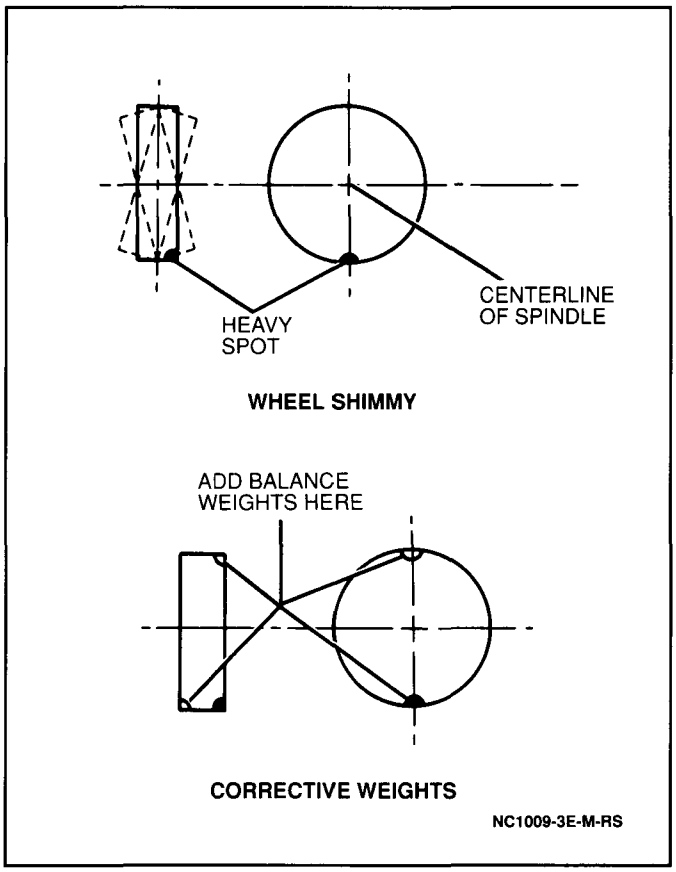

Figure 10 Dynamic Unbalance Correction

Dynamic balance is the equal distribution of weight on each side of the wheel centerline so that when the tire spins there is no tendency for the assembly to move from side to side (Figure 10). Assemblies that are dynamically unbalanced may cause shimmy.

General Balance Precautions

CAUTION: Eye protection must be used to prevent personal injury. Stones should be removed from the tread to avoid operator injury during spin balancing and to obtain a good balance.

Deposits of foreign material must be cleaned from the inside of the wheel.

The tire should be inspected for any damage, then balanced according to the equipment manufacturer's recommendations.

Off-Vehicle Balancing

Figure 11

Most electronic off-vehicle balancers are more accurate than the on-vehicle spin balancers. They are easy to use and give a dynamic (two plane) balance. Although they do not correct for drum or rotor unbalance as does on-vehicle spin balancing, this is overcome by their accuracy.

When balancing tire and wheel assemblies off the vehicle, use a balancer that pilots the wheel by centerhole (not the lug holes), if possible.

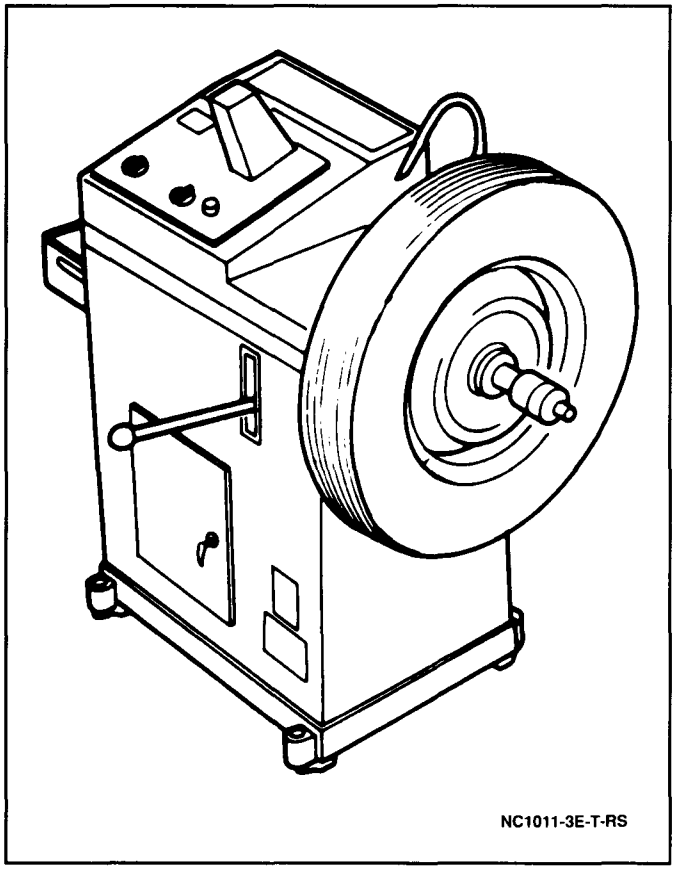

Figure 11 Off-Vehicle Balancing

Wheel Balance Weights

When static balancing, if more than 85 grams (3.0 oz.) are needed, the wheel weights should be split as equally as possible between the inboard and outboard flanges.

CORRECTING NON-UNIFORM TIRES

There are two ways to correct tires which cause a vibration even through they are properly balanced. One method uses an automatic machine which loads the tire and buffs small amounts of rubber from the stiff spots on the outer two tread rows. Correction by this method is usually permanent and, if done properly, does not significantly affect the appearance or tire tread life. Tire trueing for free runout with a blade-type machine is not recommended as this reduces the tread life substantially and often does not permanently correct the problem.

Another method is to dismount the tire and rotate it 180 degrees on the rim. It is important that this be done on tire and wheel assemblies which are known to be causing a vibration, because this method is just as likely to cause good assemblies to vibrate, as rotating the tire on the wheel will unbalance the wheel/tire assembly. Refer to SECTION 3.

SPECIFICATIONS

WHEEL NUT TORQUE

Wheel Nuts ..... 95 N·m (70 lb.ft.)

SERVICE PARTS INFORMATION

Component Name Used in Section 3E	Reference Name in Service Parts Catalog	Group Number
Wheel Stud	Bolt, Rr Hub	5.812
Wheel Nut	Nut, Wheel	5.813
Wheel	Wheel	5.803

SECTION 3F1

STANDARD STEERING WHEEL AND COLUMN

NOTICE: When fasteners are removed, always reinstall them at the same location from which they were removed. If a fastener needs to be replaced, use the correct part number fastener for that application. If the correct part number fastener is not available, a fastener of equal size and strength (or stronger) may be used. Fasteners that are not reused, and those requiring thread-locking compound, will be called out. The correct torque values must be used when installing fasteners that require them. If the above conditions are not followed, parts or system damage could result.

CONTENTS

General Description 3F1-1
Ignition Lock System 3F1-1
Lubrication 3F1-1
Diagnosis 3F1-1
On-Vehicle Service 3F1-1
Steering Wheel 3F1-1
Combination Switch 3F1-3
Hazard Warning Switch 3F1-4
Ignition Switch 3F1-4
Steering Column 3F1-5
Lower Steering Shaft 3F1-7
Checking Steering Column For Accident Damage 3F1-8
Specifications 3F1-9
Fastener Torques 3F1-9
Steering Column Specifications 3F1-9
Service Parts Information 3F1-9
Special Tools 3F1-10

GENERAL DESCRIPTION

The steering column is an energy-absorbing mechanism designed to collapse in the event of a collision, minimizing the possibility of injury to the driver.

The ignition switch is column-mounted and the column can be locked to inhibit theft. The combination switch controls the turn signal operation, headlamp operation and windshield wiper/washer operation.

The steering column can be removed from the vehicle with relative ease. To ensure that proper column energy absorption is maintained, use only the specified screws, bolts and nuts and tighten them to the specified torques.

If the column assembly is removed from the vehicle, take special care when handling it. Using a steering wheel puller other than the one recommended in this manual, hitting the end of the steering shaft and sharply leaning on or dropping the assembly could shear or loosen the plastic injections that keep the column rigid.

IGNITION LOCK SYSTEM

All automatic transmission equipped models of this vehicle are equipped with steering columns that contain a mechanical neutral start system. This system relies on a mechanical block to prevent starting the engine with the transmission in any position other than "P" (park) or "N" (neutral).

Also, a park lock (backdrive) cable connects the ignition switch to the gear shift selector. This cable prevents the gearshift selector from moving unless the ignition is in the "ON" position. Refer to SECTION 7A for further information.

LUBRICATION

Apply a thin coat of lithium grease to all friction points when reassembling.

DIAGNOSIS

For diagnosis of the steering wheel and column, and ignition switch, refer to SECTION 3. For diagnosis of the brake transmission shift interlock system, refer to SECTION 7A.

ON-VEHICLE SERVICE

STEERING WHEEL

Figures 1 through 4

Remove or Disconnect

Tool Required:
J 1859-A Steering Wheel Puller

1. Negative (-) battery cable.
2. Horn pad; pull off by hand.
3. Steering wheel retaining nut.

Important

- Scribe matchmarks on steering wheel and steering shaft to use as a guide during reinstallation (Figure 2).

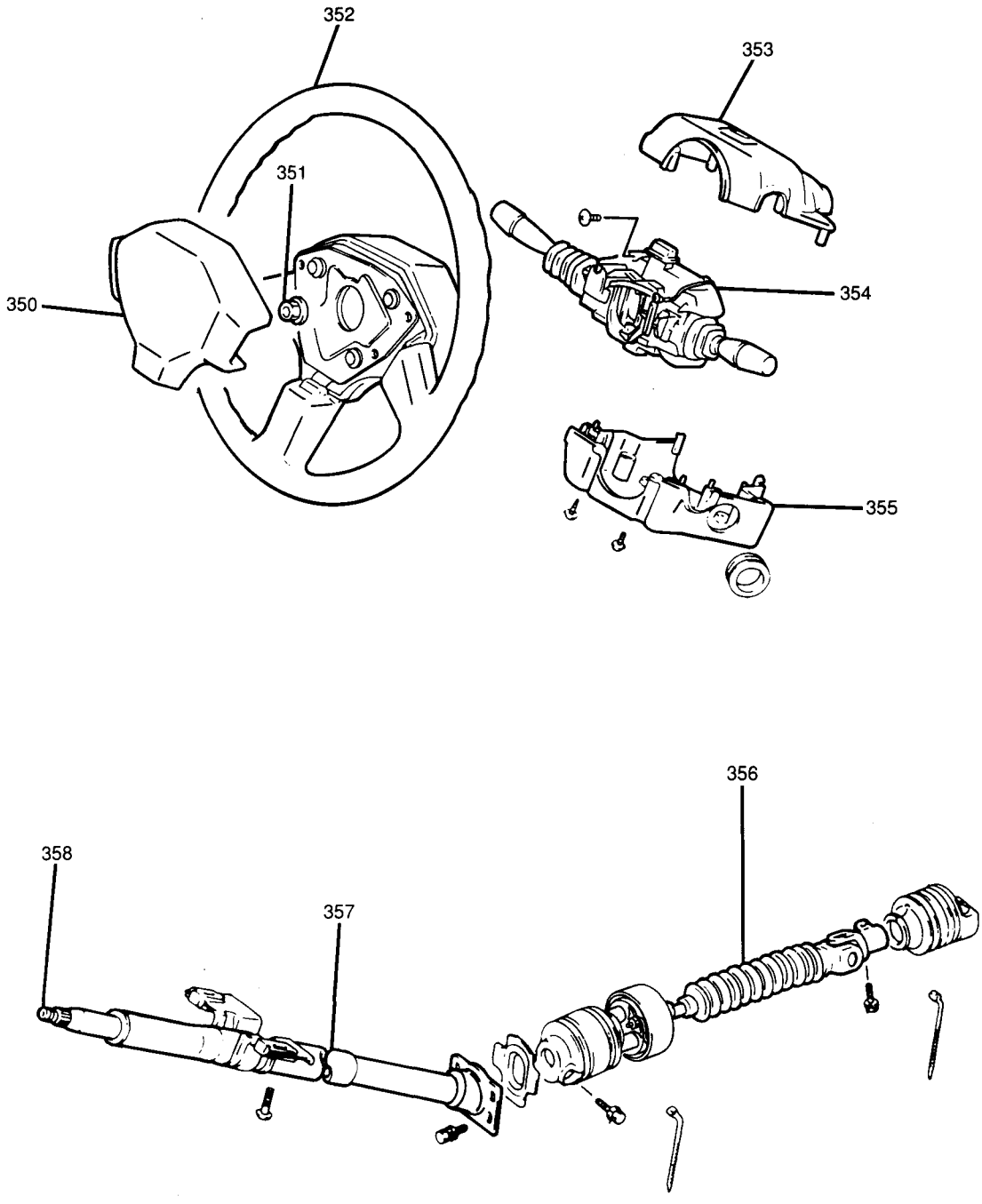

350 HORN PAD
351 STEERING WHEEL RETAINING NUT
352 STEERING WHEEL
353 UPPER STEERING COLUMN COVER
354 COMBINATION SWITCH
355 LOWER STEERING COLUMN COVER
356 LOWER STEERING SHAFT
357 STEERING COLUMN
358 STEERING SHAFT

NC0496-3F1-JT-RS

Figure 1 Standard Steering Wheel and Column Assembly

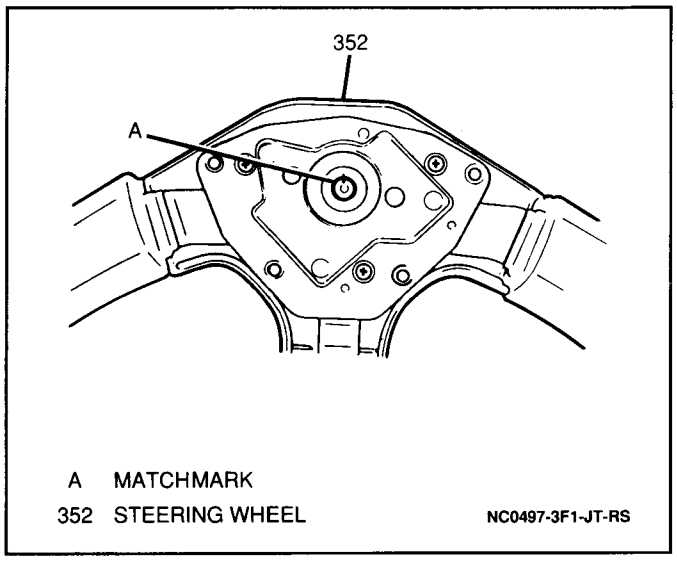

Figure 2 Horn Contact Plate

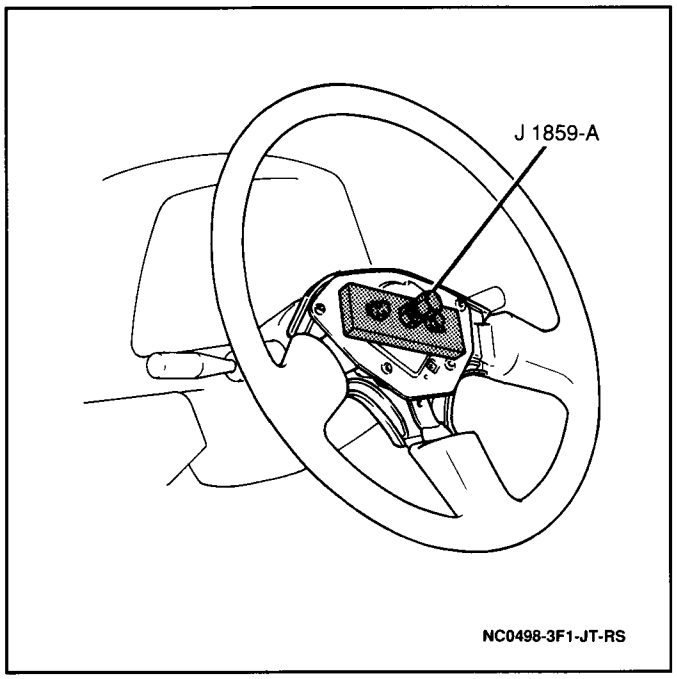

Figure 3 Removing Steering Wheel

4. Steering wheel from steering shaft using a J 1859-A (Figure 3).

Install or Connect

1. Steering wheel to steering shaft, aligning matchmarks made during the removal procedure (Figure 2).
2. Steering wheel retaining nut (Figure 4).

Tighten

- Steering wheel retaining nut to 33 N·m (24 lb.ft.).

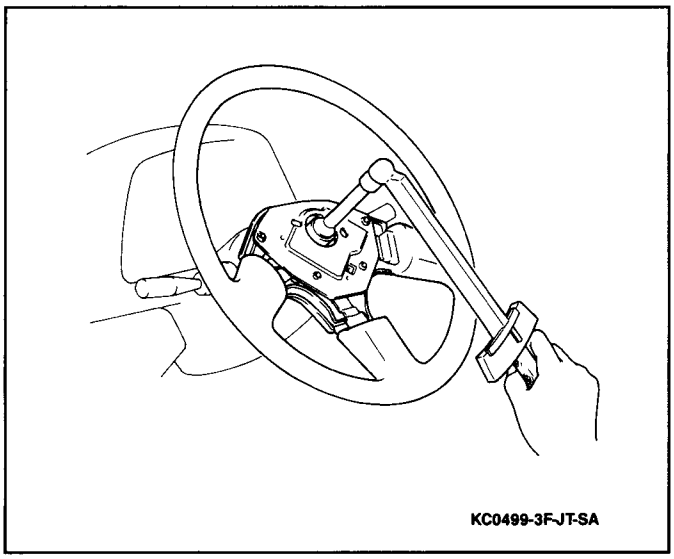

Figure 4 Torquing Steering Wheel Retaining Nut

3. Horn pad to steering wheel.
4. Negative (-) battery cable.

Tighten

- Negative (-) battery cable-to-negative (-) battery terminal retainer to 15 N·m (11 lb.ft.).

COMBINATION SWITCH

Figures 5, 6 and 7

Remove or Disconnect

1. Steering wheel from steering column. Refer to "Steering Wheel" earlier in this section.
2. Lower steering column cover panel (Figure 5).

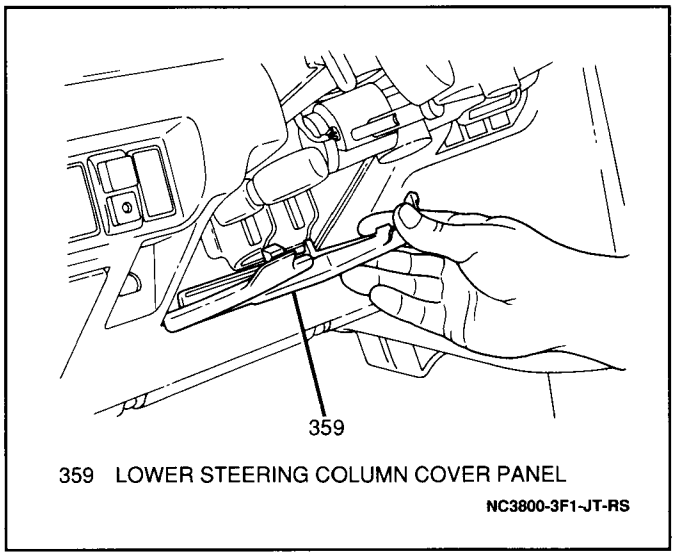

Figure 5 Removing Lower Steering Column Cover Panel

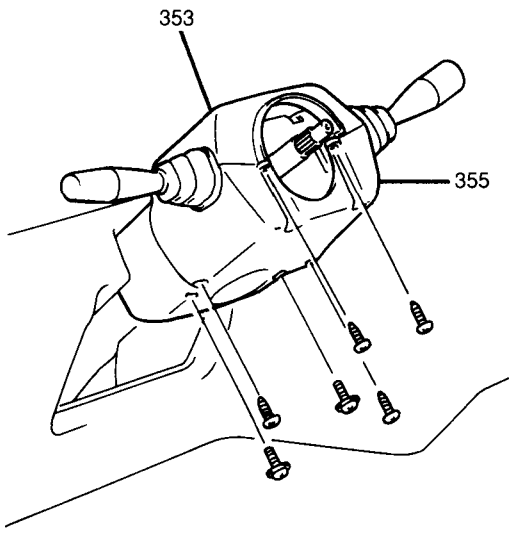

353 UPPER STEERING COLUMN COVER
355 LOWER STEERING COLUMN COVER NC0500-3F1-JT-RS

Figure 6 Steering Column Cover Screws

3. Six screws from steering column lower cover and remove upper and lower covers (Figure 6).
4. Combination switch electrical connector.
5. Retaining bands securing combination switch connector wires to steering column.
6. Four retaining screws and combination switch from steering column (Figure 7).

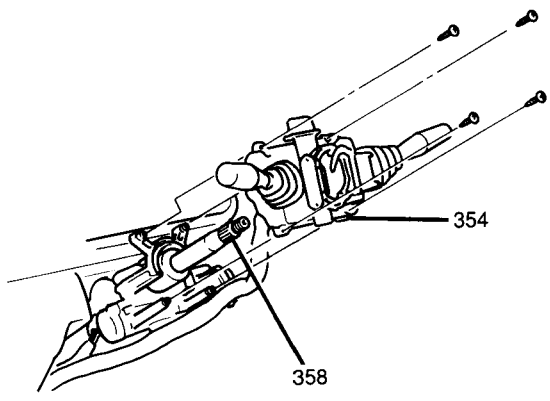

354 COMBINATION SWITCH
358 STEERING SHAFT NC0501-3F1-JT-RS

Figure 7 Removing Combination Switch

Install or Connect

1. Combination switch to steering column; secure with four retaining screws.
2. Combination switch electrical connector.
- Secure switch wiring to steering column with retaining bands.
3. Upper and lower steering column covers to column; secure with six screws.
4. Lower steering column cover panel (Figure 5).
5. Steering wheel to steering column. Refer to "Steering Wheel" earlier in this section.

HAZARD WARNING SWITCH

The hazard warning switch is incorporated into the combination switch. Refer to "Combination Switch" earlier in this section for service information.

IGNITION SWITCH

Figures 8 through 11

Remove or Disconnect

1. Steering wheel from steering column. Refer to "Steering Wheel" earlier in this section.
2. Steering column from vehicle. Refer to "Steering Column" later in this section.
- Mount steering column securely in a table vise.

NOTICE: Use care not to damage steering column when mounting it in the table vise. Use a soft-jawed vise, or wrap a shop cloth around the steering shaft assembly where it contacts the vise.

3. Two ignition switch mounting bolts. Using a hammer and chisel, create slots on the top of the mounting bolts, then remove the bolts with a screwdriver (Figure 8).

NOTICE: Be sure not to damage the aluminum ignition switch body with the chisel.

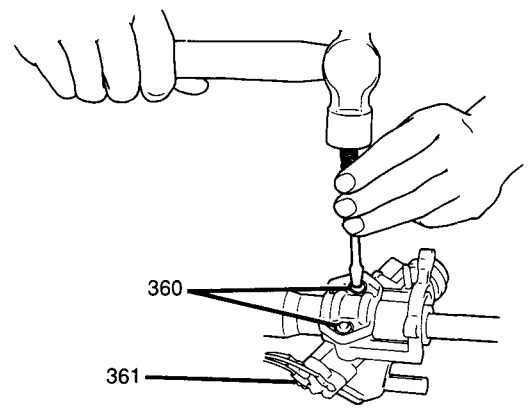

360 IGNITION SWITCH MOUNTING BOLTS
361 IGNITION SWITCH NC0508-3F1-JT-RS

Figure 8 Removing Ignition Switch Mounting Bolts

- Turn key in ignition switch to "ON" or "ACC" and remove ignition switch from steering column.

Install or Connect

- Position the oblong hole in the steering shaft so that it is visible through and in the center of the hole in the steering column (Figure 9).

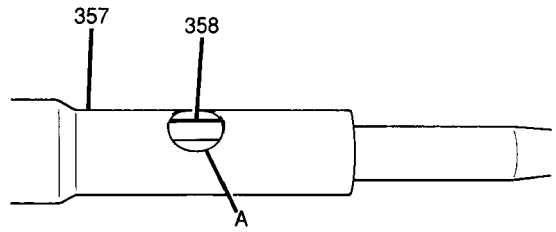

A ALIGNMENT HOLE
357 STEERING COLUMN
358 STEERING SHAFT NC0509-3F1-JT-RS

Figure 9 Aligning Steering Shaft

1. Ignition switch to column, with the ignition key still in either the "ON" or "ACC" position.
- Turn the ignition key to the "LOCK" position and remove the key from the ignition switch.
- Align the ignition switch hub with the oblong hole in the steering shaft; rotate the shaft to ensure that the steering shaft is locked (Figure 10).

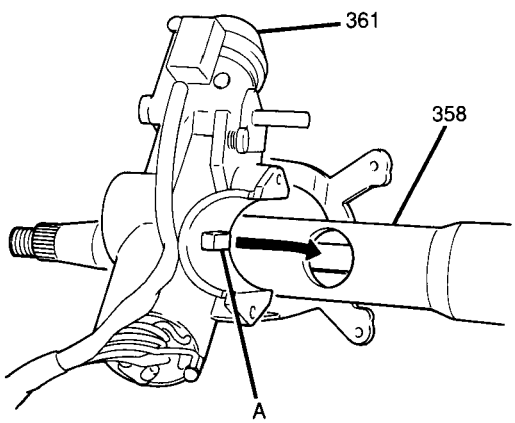

A IGNITION SWITCH HUB
358 STEERING COLUMN
361 IGNITION SWITCH NC0510-3F1-JT-RS

Figure 10 Aligning Ignition Switch Hub With Steering Shaft Hole

2. Two new break-away head bolts to ignition switch.

Tighten

- Break-away head bolts until the heads break off (Figure 11).

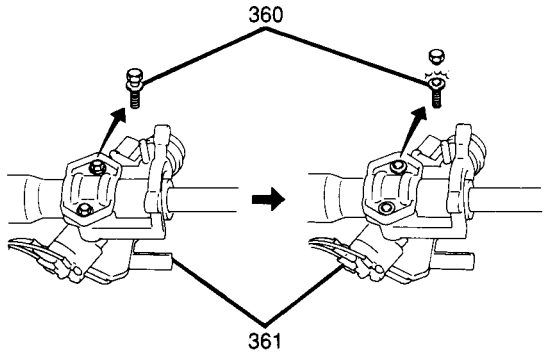

360 IGNITION SWITCH MOUNTING BOLTS
361 IGNITION SWITCH NC0511-3F1-JT-RS

Figure 11 Break-Away Head Bolts

- Turn ignition key to the "ACC" or "ON" position; check to make sure that the shaft rotates smoothly. Also check for proper lock operation.
- Remove steering column from vise.

3. Steering column to vehicle. Refer to "Steering Column" later in this section.
4. Steering wheel to steering column. Refer to "Steering Wheel" earlier in this section.

STEERING COLUMN

Figures 1, 5, 6, 7 and 12 through 15

NOTICE: The steering column is extremely susceptible to damage once it has been removed from the vehicle. Dropping the column assembly on its end could collapse the steering shaft or loosen plastic injections which maintain column rigidity. Leaning on the column could cause it to bend or deform. Any of the above damage could impair the column's collapsible design. If it is necessary to remove the steering wheel, use only the specified steering wheel puller. Under no conditions should the end of the shaft be hammered, as such action could loosen plastic injections, undermining the column's rigidity.

Remove or Disconnect

1. Steering wheel, if necessary. Refer to "Steering Wheel" earlier in this section.

Important

- If you are servicing the steering column or any column-mounted component, remove the steering wheel. If you are removing the steering column simply to gain access to instrument panel components, leave the steering wheel installed on the column.

2. Negative (-) battery cable.
3. Combination switch (if steering wheel was removed):
   A. Upper and lower steering column covers by removing six screws from lower cover (Figure 6).
   B. Lower steering column cover panel (Figure 5).
   C. Combination switch electrical connector.
   D. Loosen retaining bands securing switch connector wires to steering column.
   E. Switch from column by removing four screws (Figure 7).
4. Ignition switch electrical connector.
5. Park lock cable from ignition switch by removing one bracket retaining screw and C-clip at the ignition switch lock cylinder (automatic transmission equipped models, Figure 12).

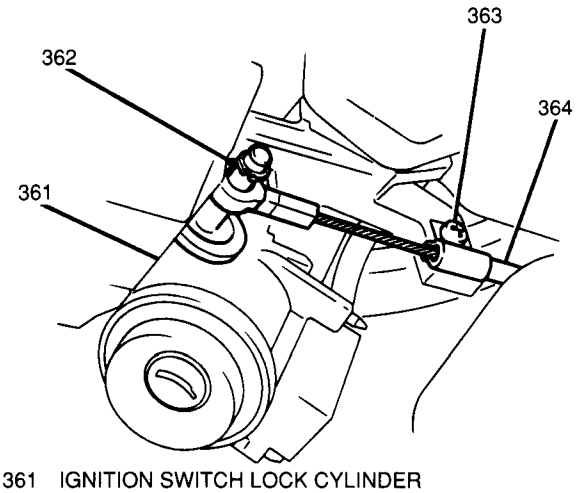

361 IGNITION SWITCH LOCK CYLINDER
362 C-CLIP
363 BRACKET RETAINING SCREW
364 PARK/LOCK CABLE
NC1242-3F1-JT-RS

Figure 12 Park Lock Cable

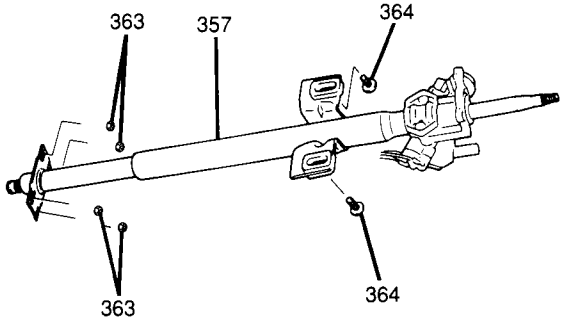

357 STEERING COLUMN ASSEMBLY
363 STEERING COLUMN-TO-BULKHEAD PLATE BOLTS
364 STEERING COLUMN MOUNTING BOLTS (TORX-HEAD)
NC3020-3F1-JT-RS

Figure 13 Steering Column Fasteners

6. Four bolts from the steering column-to-bulkhead plate (Figure 13).
7. Antilock brake valve heat shield (two bolts).
8. Steering shaft from lower steering shaft joint by removing one bolt (Figure 14).

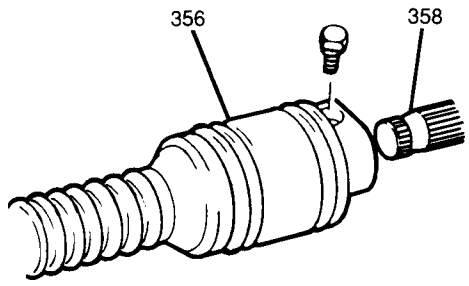

356 LOWER STEERING SHAFT
358 STEERING SHAFT
NC0502-3F1-JT-RS

Figure 14 Removing Steering Column Joint Bolt

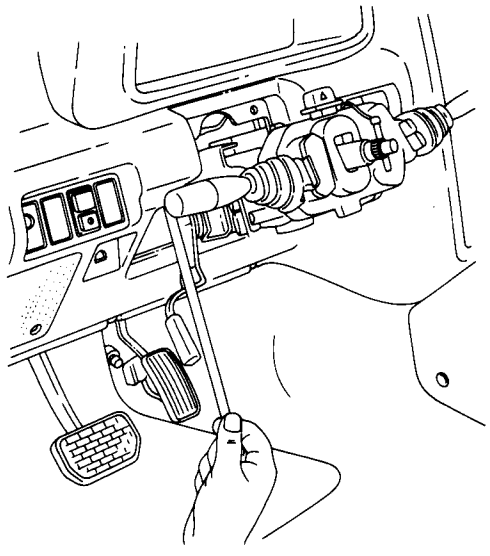

NC3801-3F1-JT-RS

Figure 15 Removing Steering Column Mounting Bolts

9. Two steering column mounting (Torx®) bolts and remove column from vehicle (Figure 15).

Install or Connect

- Position steering column in vehicle, inserting the steering shaft into the lower shaft joint; secure with joint bolt.

Tighten

- Steering shaft joint bolt to 25 N·m (18 lb.ft.).

1. Antilock brake valve heat shield; secure with two bolts.

Tighten

- Antilock brake heat shield bolts to 10 N·m (89 lb.ft.).

2. Two steering column mounting (Torx®) bolts and four bolts to the column-to-bulkhead plate (Figure 13).

Tighten

- All steering column fastening bolts to 14 N·m (124 lb.in.).

3. Park lock cable to ignition switch; secure with one bracket retaining screw and C-clip at the ignition switch lock cylinder (automatic transmission equipped vehicles, Figure 12).
4. Ignition switch electrical connector.
5. Combination switch to steering column (if steering wheel was removed); secure with four screws (Figure 7).
6. Combination switch electrical connector; secure electrical wiring to column with retaining bands.
7. Lower steering column cover panel (Figure 5).
8. Upper and lower steering column covers; secure with six screws (Figure 6).
9. Steering wheel to steering column (if steering wheel was removed). Refer to "Steering Wheel" earlier in this section.
10. Negative (-) battery cable.

Tighten

- Negative (-) battery cable-to-negative (-) battery terminal retainer to 15 N·m (11 lb.ft.).

LOWER STEERING SHAFT

Figures 5, 16 and 17

Remove or Disconnect

- Make sure the front wheels are in a straight-ahead direction before removing lower steering shaft.

1. Antilock brake valve heat shield (two bolts).
2. Steering shaft from lower steering shaft by removing one joint bolt (Figure 14).
3. Lower shaft-to-steering gear joint bolt (Figure 16).
4. Lower steering column cover panel (Figure 5).

- Loosen all steering column mounting bolts — two upper Torx® and four steering column-to-bulkhead plate bolts.
- Move steering column rearward.

5. Lower steering shaft from steering gear, steering column and vehicle.

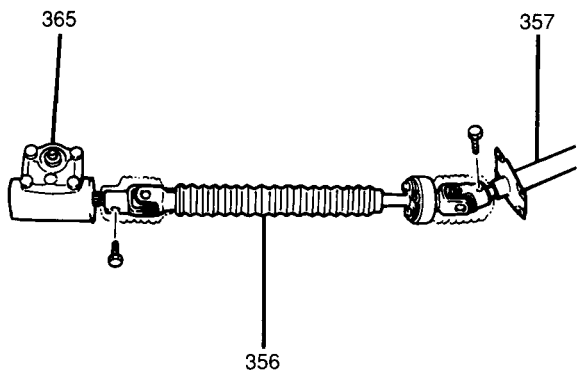

356 LOWER STEERING SHAFT
357 STEERING COLUMN
365 STEERING GEAR NC3001-3F1-JT-RS

Figure 16 Lower Steering Shaft Bolts

Install or Connect

1. Lower shaft to steering gear, aligning flat on steering gear shaft and lower shaft (Figure 17).

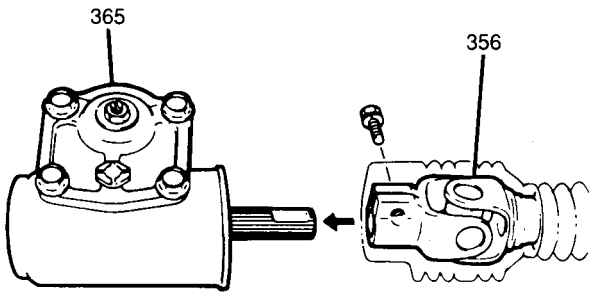

356 LOWER STEERING SHAFT
365 STEERING GEAR NC0513-3F1-JT-RS

Figure 17 Aligning Lower Shaft and Steering Gear

2. Lower shaft-to-steering gear joint bolt.
3. Lower shaft to steering shaft; secure with one joint bolt.

Tighten

- Lower steering shaft joint bolts to 25 N·m (18 lb.ft.).

4. Antilock brake valve heat shield; secure with two bolts.

Tighten

- Antilock brake heat shield bolts to 10 N·m (89 lb.in.).

- Move steering column forward to its correct position.

Tighten

- All steering column fastening bolts to 14 N·m (124 lb.in.).

5. Lower steering column cover panel (Figure 5).

CHECKING STEERING COLUMN FOR ACCIDENT DAMAGE

Figures 18 through 21

NOTICE: Vehicles involved in accidents resulting in frame damage, major body or sheet metal damage where the steering column has been impacted may also have a damaged or misaligned steering column. In such cases, the following the steps should be performed.

Important

- The steering shaft and column are not serviced separately. If either the shaft or column is found to be defective, replace the unit as an assembly.

Inspect

- Capsules on steering column bracket; each capsule should be within 1.0 mm (0.039-inch) from bottom of slots (Figure 18). If capsules fail to meet this specification, the steering column assembly should be replaced. For convenience, a thickness gage can be used.

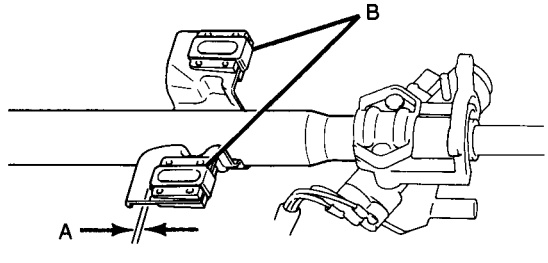

A 1.0 mm (0.039")
B CAPSULES
NC0514-3F1-JT-RS

Figure 18 Inspecting Capsule

Measure

Tools Required:
J 8001 Dial Indicator
J 26900-13 Magnetic Base

1. Steering shaft length. If the length is shorter than specification, replace the column assembly (Figure 19).
   - Steering column length:
     Standard — 780 mm (30.70-inches).
     Minimum — 778 mm (30.63-inches).

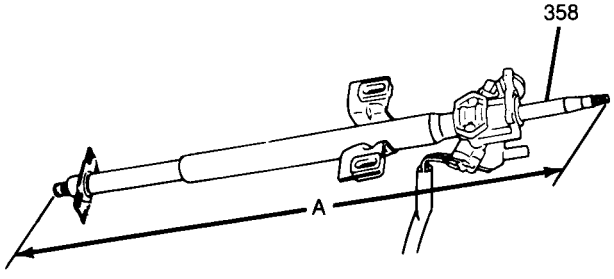

A STEERING SHAFT LENGTH
STANDARD — 780 mm (30.70")
STEERING SHAFT LENGTH
MINIMUM — 778 mm (30.63")
358 STEERING SHAFT
NC0515-3F1-JT-RS

Figure 19 Measuring Steering Shaft

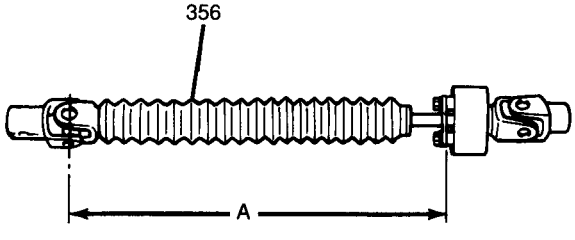

A LOWER STEERING SHAFT LENGTH
W/POWER STEERING — 287 mm (11.30")
LOWER STEERING SHAFT LENGTH
W/MANUAL STEERING — 332 mm (13.07")
356 LOWER STEERING SHAFT
NC3010-3F1-JT-RS

Figure 20 Measuring Lower Steering Shaft

2. Lower steering shaft length. If the length is shorter than specification, replace the lower steering shaft (Figure 20).
   - Lower steering shaft length:
     With power steering — 287 mm (11.30-inches).
     With manual steering — 332 mm (13.07-inches).
3. Lower steering shaft runout using a J 8001 and a J 26900-13 (Figure 21). To ensure accuracy, clean area of the lower shaft where measurement will be taken. If runout exceeds specified limits, replace it with a new one.
   - Lower steering shaft maximum allowable runout — 2 mm (0.079-inch).

Inspect

1. Steering shaft joints and shaft for any damage such as cracks, breaks, malfunctions or excessive play. If anything is found faulty, replace as shaft assembly.
2. Steering shaft for smooth rotation. If found defective, replace as column assembly.

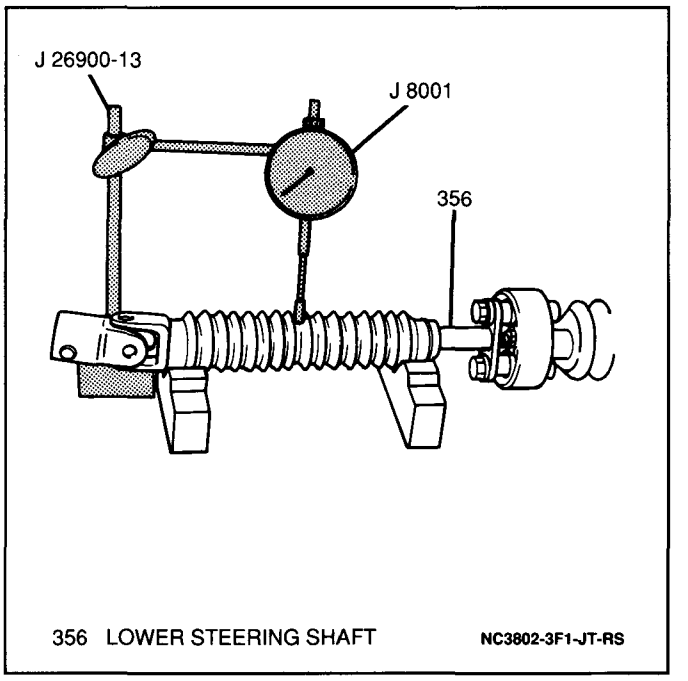

Figure 21 Measuring Lower Steering Shaft Runout

SPECIFICATIONS

FASTENER TORQUES

Steering Wheel Retaining Nut	33 N·m (24 lb.ft.)
Negative (-) Battery Cable-to-Negative (-) Battery Terminal Retainer	15 N·m (11 lb.ft.)
Steering Column Fastening Bolts	14 N·m (124 lb.in.)
Steering Shaft Joint Bolts	25 N·m (18 lb.ft.)
Lower Steering Shaft-to-Steering Gear Bolt	25 N·m (18 lb.ft.)
Antilock Brake Valve Heat Shield Bolts	10 N·m (89 lb.in.)

STEERING COLUMN SPECIFICATIONS

Steering Column Capsule-to-Slot Clearance	1 mm (0.039 in.)
Steering Column Length	
Standard	780 mm (30.70 in.)
Minimum	778 mm (30.63 in.)
Lower Steering Shaft Length	
With Power Steering	287 mm (11.30 in.)
With Manual Steering	332 mm (13.07 in.)
Lower Steering Shaft Maximum Allowable Runout	2 mm (0.079 in.)

SERVICE PARTS INFORMATION

Component Name Used in Section 3F1	Reference Name in Service Parts Catalog	Group Number
Steering Wheel	Wheel, Steering	6.513
Horn Pad	Button, Steering Wheel Horn	2.819
Combination Switch	Switch Assm, Steering Wheel	2.895
Column Covers	Covers, Steering Wheel	6.518
Steering Column	Column Assm, Steering	6.518
Lower Steering Shaft	Shaft, Steering Column Lower	6.524
Ignition Switch	Lock, Steering	2.188

SPECIAL TOOLS

1
J 26900-13

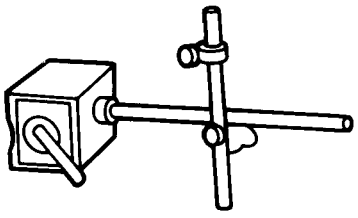

3
J 8001

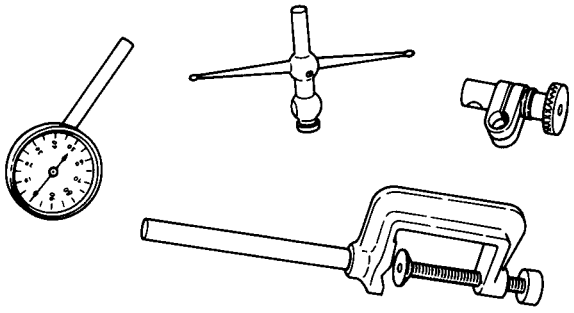

2
J 1859-A

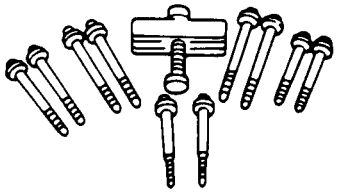

1 MAGNETIC BASE
2 STEERING WHEEL PULLER
3 DIAL INDICATOR

NC3803-3F1-JT-RS

SECTION 3F2

TILT STEERING WHEEL AND COLUMN

NOTICE: When fasteners are removed, always reinstall them at the same location from which they were removed. If a fastener needs to be replaced, use the correct part number fastener for that application. If the correct part number fastener is not available, a fastener of equal size and strength (or stronger) may be used. Fasteners that are not reused, and those requiring thread-locking compound, will be called out. The correct torque values must be used when installing fasteners that require them. If the above conditions are not followed, parts or system damage could result.

CONTENTS

General Description 3F2-1
Tilt Steering Column 3F2-1
Ignition Lock System 3F2-1
Lubrication 3F2-1
Diagnosis 3F2-2
On-Vehicle Service 3F2-2
Steering Wheel 3F2-2
Combination Switch 3F2-3
Hazard Warning Switch 3F2-4
Ignition Switch 3F2-4
Steering Column 3F2-5
Lower Steering Shaft 3F2-7
Checking Steering Column For Accident Damage 3F2-8
Specifications 3F2-9
Fastener Torques 3F2-9
Steering Column Specifications 3F2-9
Service Parts Information 3F2-9
Special Tools 3F2-10

GENERAL DESCRIPTION

TILT STEERING COLUMN

Figures 1 and 2

The tilt steering column available in this vehicle features a column mounting bracket and a pivot plate at its base which are designed to raise or lower the height of the steering column, offering greater driver comfort. Steering column tilt is regulated by the tilt lever, which is located along the bottom of the left side of the column (Figure 1).

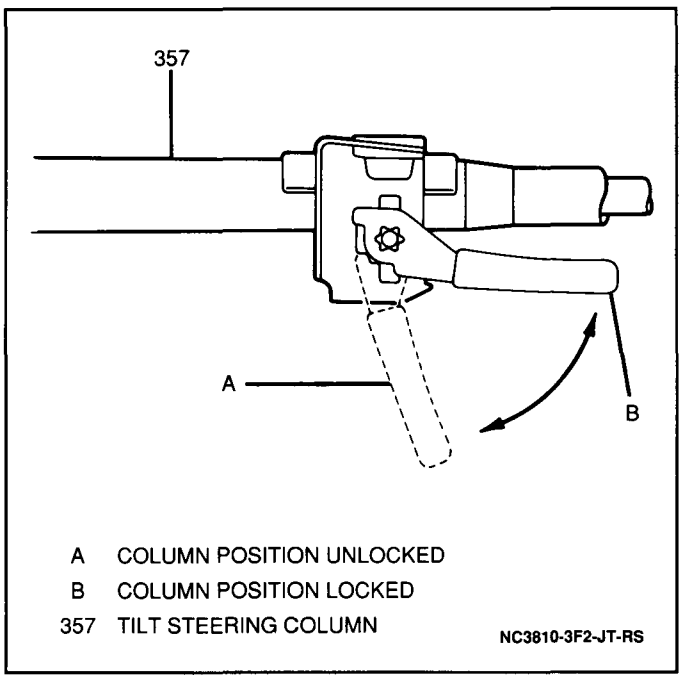

Figure 1 Tilt Column Lever

The steering column is an energy-absorbing mechanism designed to collapse in the event of a collision, minimizing the possibility of injury to the driver.

The ignition switch is column-mounted and the column can be locked to inhibit theft. The combination switch controls the turn signal operation, headlamp operation and windshield wiper/washer operation.

The steering column can be removed from the vehicle with relative ease. To ensure that proper column energy absorption is maintained, use only the specified screws, bolts and nuts and tighten them to the specified torques.

If the column assembly is removed from the vehicle, take special care when handling it. Using a steering wheel puller other than the one recommended in this manual, hitting the end of the steering shaft and sharply leaning on or dropping the assembly could shear or loosen the plastic injections that keep the column rigid.

IGNITION LOCK SYSTEM

All automatic transmission-equipped models of this vehicle are equipped with steering columns that contain a mechanical neutral start system. This system relies on a mechanical block to prevent starting the engine with the transmission in any position other than "P" (park) or "N" (neutral).

Also, a park lock (back drive) cable connects the ignition switch to the gear shift selector. This cable prevents the gear shift selector from moving unless the ignition is in the "ON" position. Refer to SECTION 7A for further information.

LUBRICATION

Apply a thin coat of lithium grease to all friction points when reassembling.

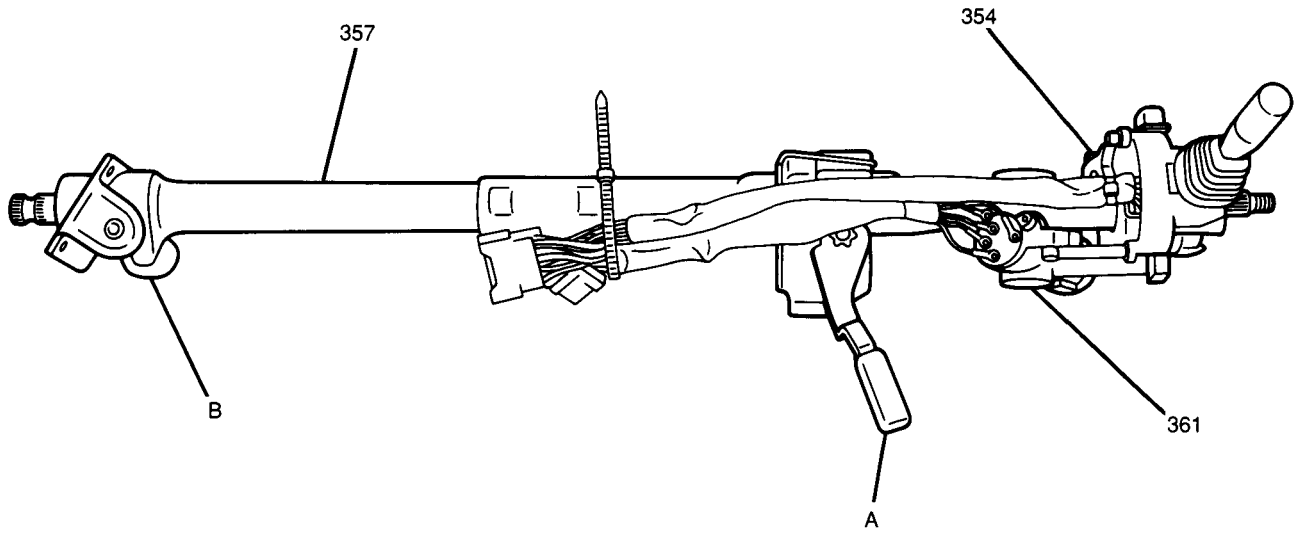

A TILT LEVER
B COLUMN PIVOT
354 COMBINATION SWITCH
357 TILT STEERING COLUMN
361 IGNITION SWITCH

NC3811-3F2-JT-RS

Figure 2 Tilt Steering Column

DIAGNOSIS

For diagnosis of the steering wheel and column and ignition switch, refer to SECTION 3. For diagnosis of the brake transmission shift interlock system, refer to SECTION 7A.

ON-VEHICLE SERVICE

STEERING WHEEL

Figures 3, 4 and 5

Remove or Disconnect

Tool Required:
J 1859-A Steering Wheel Puller

1. Negative (-) battery cable.
2. Horn pad; pull off by hand.
3. Steering wheel retaining nut.

Important

- Scribe match marks on steering wheel and steering shaft to use as a guide during installation (Figure 3).

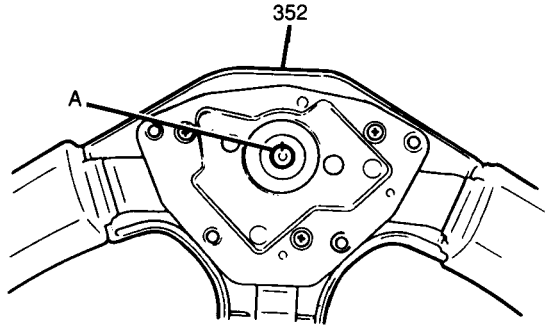

A MATCHMARK
352 STEERING WHEEL

NC0497-3F1-JT-RS

Figure 3 Steering Wheel-to-Steering Shaft Scribe Marks

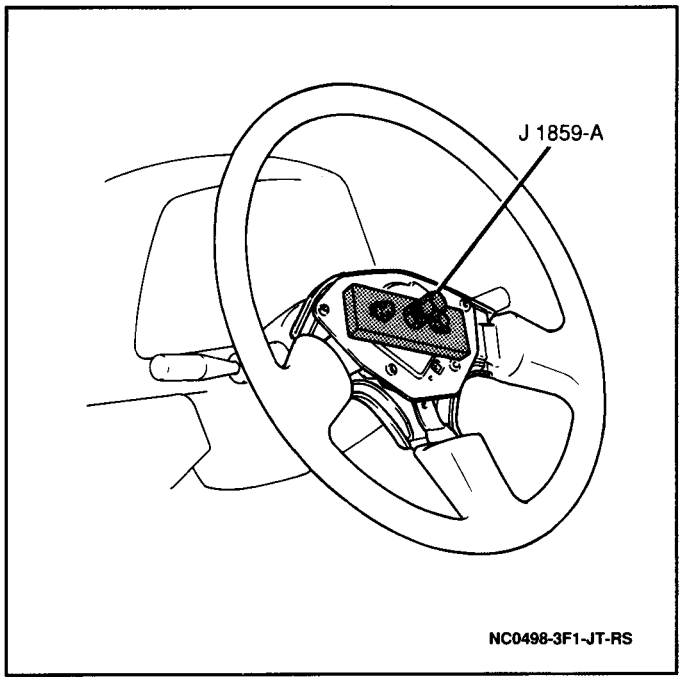

Figure 4 Removing Steering Wheel

4. Steering wheel from steering shaft using a J 1859-A (Figure 4).

Install or Connect

1. Steering wheel to steering shaft, aligning match marks made during the removal procedure (Figure 3).
2. Steering wheel retaining nut (Figure 5).

Tighten

- Steering wheel retaining nut to 33 N·m (24 lb.ft.).

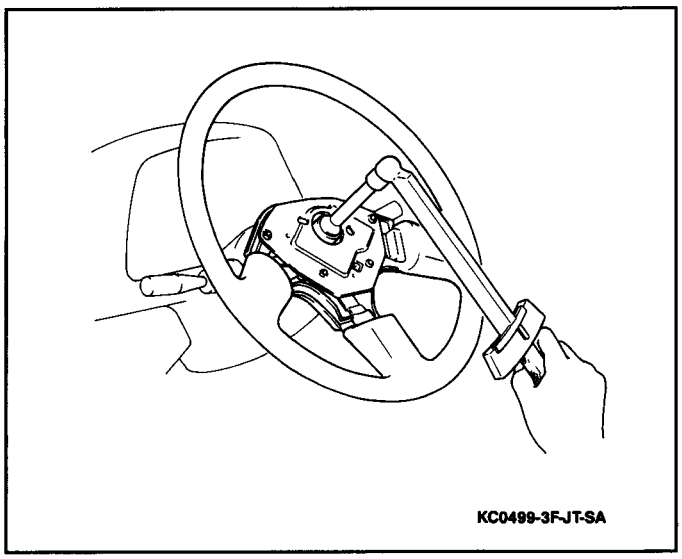

Figure 5 Torquing Steering Wheel Retaining Nut

3. Horn pad to steering wheel.
4. Negative (-) battery cable.

Tighten

- Negative (-) battery cable-to-negative (-) battery terminal retainer to 15 N·m (11 lb.ft.).

COMBINATION SWITCH

Figures 6, 7 and 8

Remove or Disconnect

1. Steering wheel from steering column. Refer to "Steering Wheel" earlier in this section.
2. Lower steering column cover panel (Figure 6).

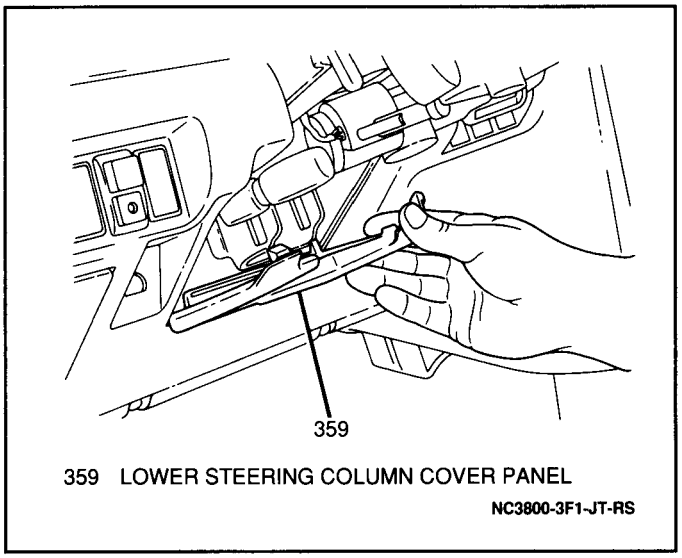

Figure 6 Removing Lower Steering Column Cover

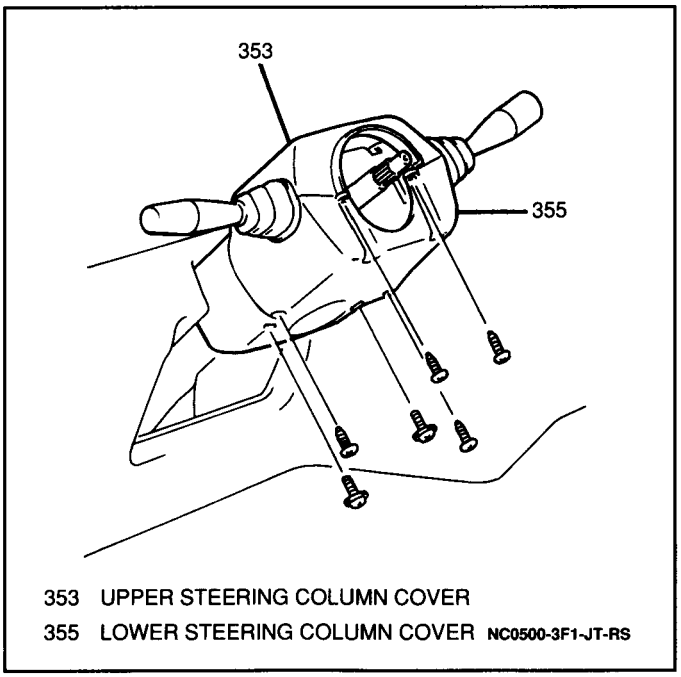

Figure 7 Steering Column Cover Screws

3. Six screws from steering column lower cover and remove upper and lower covers (Figure 7).
4. Combination switch electrical connector.
5. Retaining bands securing combination switch connector wires to steering column.
6. Four retaining screws and combination switch from steering column (Figure 8).

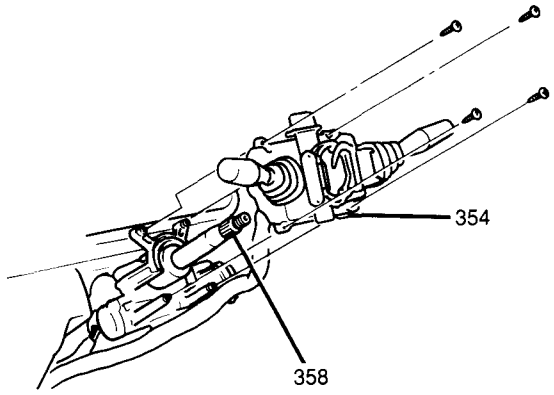

354 COMBINATION SWITCH
358 STEERING SHAFT NC0501-3F1-JT-RS

Figure 8 Removing Combination Switch

Install or Connect

1. Combination switch to steering column; secure with four retaining screws.
2. Combination switch electrical connector.
- Secure switch wiring to steering column with retaining bands.
3. Upper and lower steering column covers to column; secure with six screws.
4. Lower steering column cover panel (Figure 5).
5. Steering wheel to steering column. Refer to "Steering Wheel" earlier in this section.

HAZARD WARNING SWITCH

The hazard warning switch is incorporated into the combination switch. Refer to "Combination Switch" earlier in this section for service information.

IGNITION SWITCH

Figures 9 through 12

Remove or Disconnect

1. Steering wheel from steering column. Refer to "Steering Wheel" earlier in this section.
2. Steering column from vehicle. Refer to "Steering Column" later in this section.
- Mount steering column securely in a table vise.

NOTICE: Use care not to damage steering column when mounting it in the table vise. Use a soft-jawed vise, or wrap a shop cloth around the steering shaft assembly where it contacts the vise.

3. Two ignition switch mounting bolts. Using a hammer and chisel, create slots on the top of the mounting bolts, then remove the bolts with a screwdriver (Figure 9).

NOTICE: Be sure not to damage the aluminum ignition switch body with the chisel.

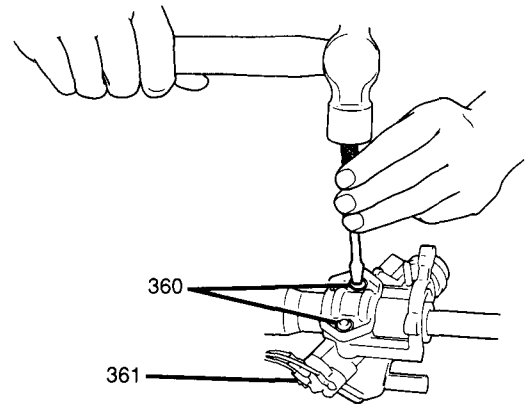

360 IGNITION SWITCH MOUNTING BOLTS
361 IGNITION SWITCH NC0508-3F1-JT-RS

Figure 9 Removing Ignition Switch Mounting Bolts

- Turn key in ignition switch to "ON" or "ACC" and remove ignition switch from steering column.

Install or Connect

- Position the oblong hole in the steering shaft so that it is visible through and in the center of the hole in the steering column (Figure 10).

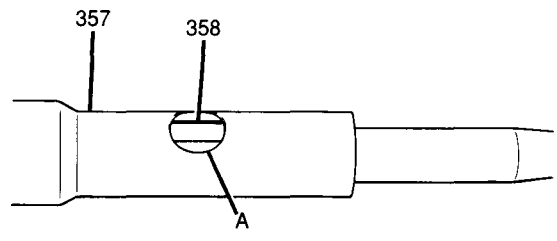

A ALIGNMENT HOLE
357 STEERING COLUMN
358 STEERING SHAFT NC0509-3F1-JT-RS

Figure 10 Aligning Steering Shaft

1. Ignition switch to column, with the ignition key still in either the "ON" or "ACC" position.
- Turn the ignition key to the "LOCK" position and remove the key from the ignition switch.

- Align the ignition switch hub with the oblong hole in the steering shaft; rotate the shaft to ensure that the steering shaft is locked (Figure 11).

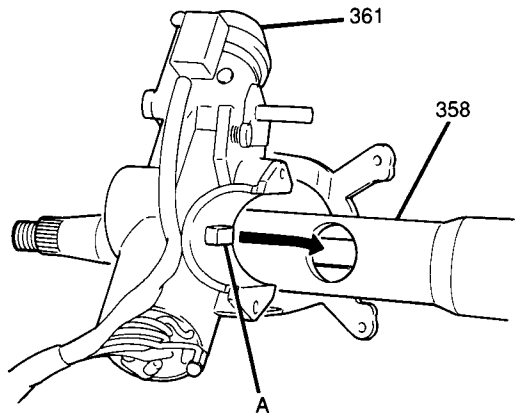

A IGNITION SWITCH HUB
358 STEERING COLUMN
361 IGNITION SWITCH NC0510-3F1-JT-RS

Figure 11 Aligning Ignition Switch Hub With Steering Shaft Hole

2. Two new break-away head bolts to ignition switch.

Tighten

- Break-away head bolts until the heads break off (Figure 12).

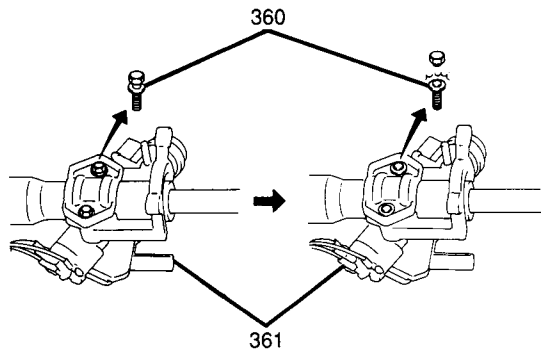

360 IGNITION SWITCH MOUNTING BOLTS
361 IGNITION SWITCH NC0511-3F1-JT-RS

Figure 12 Break-Away Head Bolts

- Turn ignition key to the "ACC" or "ON" position; check to make sure that the shaft rotates smoothly. Also check for proper lock operation.
- Remove steering column from vise.

3. Steering column to vehicle. Refer to "Steering Column" later in this section.
4. Steering wheel to steering column. Refer to "Steering Wheel" earlier in this section.

STEERING COLUMN

Figures 2, 6, 7, 8 and 13 through 16

NOTICE: The steering column is extremely susceptible to damage once it has been removed from the vehicle. Dropping the column assembly on its end could collapse the steering shaft or loosen plastic injections which maintain column rigidity. Leaning on the column could cause it to bend or deform. Any of the above damage could impair the column's collapsible design. If it is necessary to remove the steering wheel, use only the specified steering wheel puller. Under no conditions should the end of the shaft be hammered, as such action could loosen plastic injections, undermining the column's rigidity.

Remove or Disconnect

1. Steering wheel, if necessary. Refer to "Steering Wheel" earlier in this section.

Important

- If you are servicing the steering column or any column-mounted component, remove the steering wheel. If you are removing the steering column simply to gain access to instrument panel components, leave the steering wheel installed on the column.

2. Negative (-) battery cable.
3. Combination switch (if steering wheel was removed):
   A. Upper and lower steering column covers by removing six screws from lower cover (Figure 7).
   B. Lower steering column cover panel (Figure 6).
   C. Combination switch electrical connector.
   D. Loosen retaining bands securing switch connector wires to steering column.
   E. Switch from column by removing four screws (Figure 8).
4. Ignition switch electrical connector.

5. Park lock cable from ignition switch by removing one bracket retaining screw and C-clip at the ignition switch lock cylinder (automatic transmission equipped models only, Figure 13).

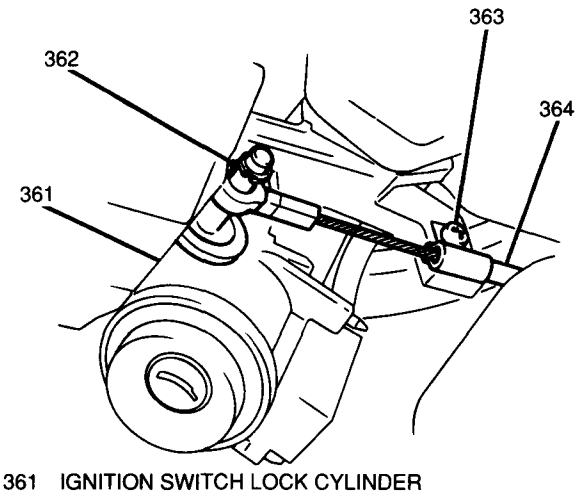

361 IGNITION SWITCH LOCK CYLINDER
362 C-CLIP
363 BRACKET RETAINING SCREW
364 PARK/LOCK CABLE
NC1242-3F1-JT-RS

Figure 13 Park Lock Cable

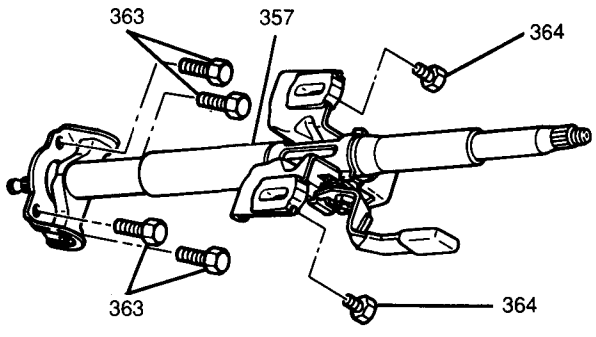

357 STEERING COLUMN ASSEMBLY
363 STEERING COLUMN-TO-BULKHEAD PLATE BOLTS
364 STEERING COLUMN MOUNTING BOLTS (TORX-HEAD)
NC3820-3F2-JT-RS

Figure 14 Steering Column Fasteners

6. Four bolts from the steering column-to-bulkhead plate (Figure 14).
7. Antilock brake valve heat shield (two bolts).
8. Steering shaft from lower steering shaft joint by removing one bolt (Figure 15).

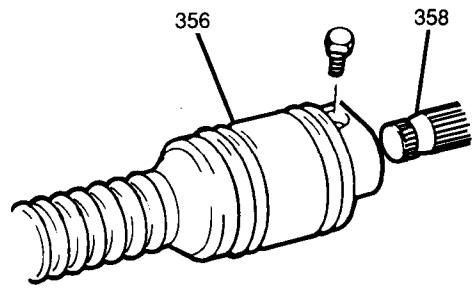

356 LOWER STEERING SHAFT
358 STEERING SHAFT
NC0502-3F1-JT-RS

Figure 15 Removing Steering Column Joint Bolt

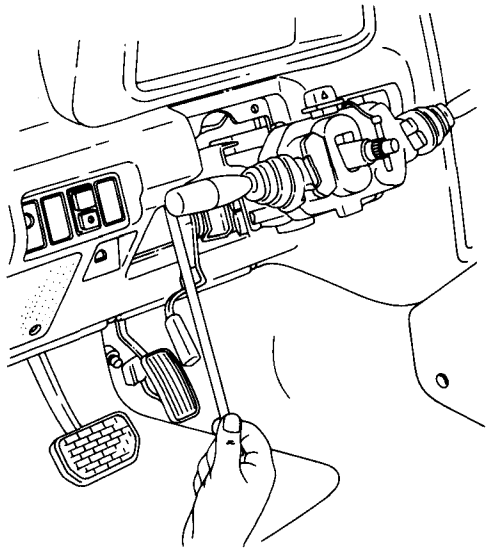

NC3801-3F1-JT-RS

Figure 16 Removing Steering Column Mounting Bolts

9. Two steering column mounting (Torx®) bolts and remove column from vehicle (Figure 16).

Install or Connect

- Position steering column in vehicle, inserting the steering shaft into the lower shaft joint; secure with joint bolt.

Tighten

- Steering shaft joint bolt to 25 N·m (18 lb.ft.).

1. Antilock brake valve heat shield; secure with two bolts.

Tighten

- Antilock brake heat shield bolts to 10 N·m (89 lb.in.).

2. Two steering column mounting (Torx®) bolts and four bolts to the column-to-bulkhead plate (Figure 14).

Tighten

- All steering column fastening bolts to 14 N·m (124 lb.in.).

3. Park lock cable to ignition switch; secure with one bracket retaining screw and C-clip at the ignition switch lock cylinder (automatic transmission equipped vehicles only, Figure 13).
4. Ignition switch electrical connector.
5. Combination switch to steering column (if steering wheel was removed); secure with four screws (Figure 8).
6. Combination switch electrical connector; secure electrical wiring to column with retaining bands.
7. Lower steering column cover panel (Figure 6).
8. Upper and lower steering column covers; secure with six screws (Figure 7).
9. Steering wheel to steering column (if steering wheel was removed). Refer to "Steering Wheel" earlier in this section.
10. Negative (-) battery cable.

Tighten

- Negative (-) battery cable-to-negative (-) battery terminal retainer to 15 N·m (11 lb.ft.).

LOWER STEERING SHAFT

Figures 6, 15, 17 and 18

Remove or Disconnect

- Make sure the front wheels are in a straight-ahead direction before removing lower steering shaft.

1. Antilock brake valve heat shield (two bolts).
2. Steering shaft from lower steering shaft by removing one joint bolt (Figure 15).
3. Lower shaft-to-steering gear joint bolt (Figure 17).
4. Lower steering column cover panel (Figure 6).

- Loosen all steering column mounting bolts — two upper Torx® and four steering column-to-bulkhead plate bolts.
- Move steering column rearward.

5. Lower steering shaft from steering gear, steering column and vehicle.

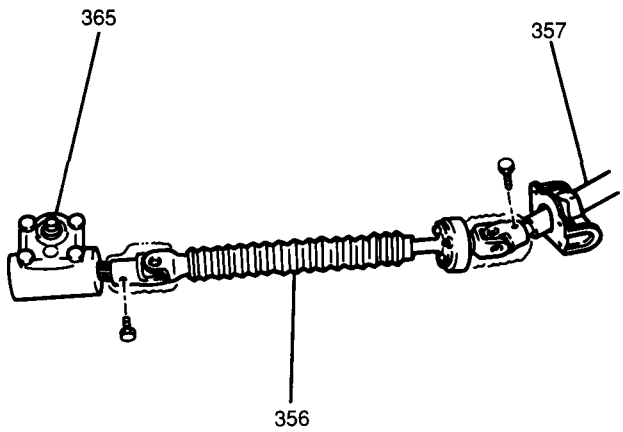

356 LOWER STEERING SHAFT
357 STEERING COLUMN
365 STEERING GEAR
NC3860-3F2-JT-RS

Figure 17 Lower Steering Shaft Bolts

Install or Connect

1. Lower shaft to steering gear, aligning flat on steering gear shaft and lower shaft (Figure 18).

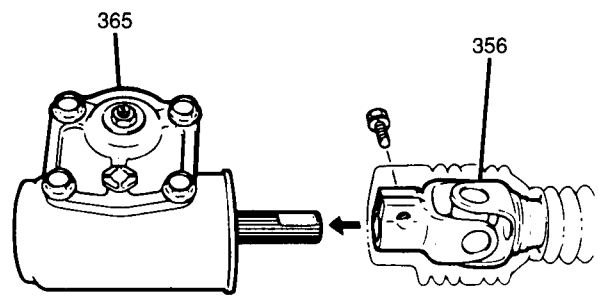

356 LOWER STEERING SHAFT
365 STEERING GEAR
NC0513-3F1-JT-RS

Figure 18 Aligning Lower Shaft and Steering Gear

2. Lower shaft-to-steering gear joint bolt.
3. Lower shaft to steering shaft; secure with one joint bolt.

Tighten

- Lower steering shaft joint bolts to 25 N·m (18 lb.ft.).

4. Antilock brake valve heat shield; secure with two bolts.

Tighten

- Antilock brake heat shield bolts to 10 N·m (89 lb.in.).

- Move steering column forward to its correct position.

Tighten

- All steering column fastening bolts to 14 N·m (124 lb.in.).

5. Lower steering column cover panel (Figure 6).

CHECKING STEERING COLUMN FOR ACCIDENT DAMAGE

Figures 19 through 22

NOTICE: Vehicles involved in accidents resulting in frame damage, major body or sheet metal damage where the steering column has been impacted may also have a damaged or misaligned steering column. In such cases, the following steps should be performed.

Important

- The steering shaft and column are not serviced separately. If either the shaft or column is found to be defective, replace the unit as an assembly.

Inspect

- Capsules on steering column bracket; each capsule should be within 1.0 mm (0.039-inch) from bottom of slots. If capsules fail to meet this specification, the steering column assembly should be replaced. For convenience, a feeler gage can be used (Figure 19).

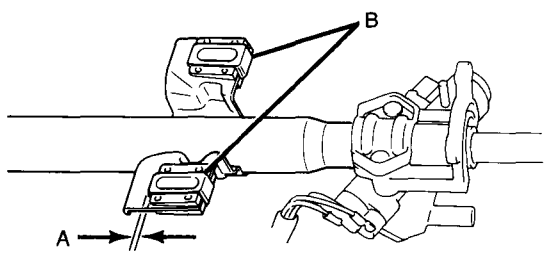

A 1.0 mm (0.039")
B CAPSULES NC0514-3F1-JT-RS

Figure 19 Inspecting Steering Column Capsules

Measure

Tools Required:
J 8001 Dial Indicator
J 26900-13 Magnetic Base

1. Steering shaft length (Figure 20). If the length is shorter than specification, replace the column assembly.
   - Steering column length:
     Standard – 780 mm (30.70-inches).
     Minimum – 778 mm (30.63-inches).

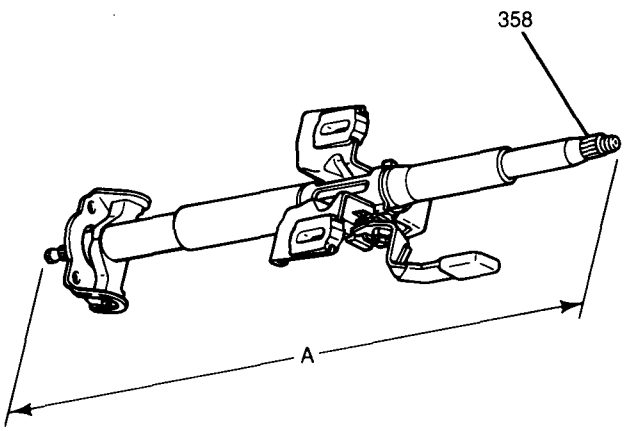

A STEERING SHAFT LENGTH STANDARD — 780 mm (30.70")
STEERING SHAFT LENGTH MINIMUM — 778 mm (30.63")
358 STEERING SHAFT NC3840-3F2-JT-RS

Figure 20 Measuring Steering Shaft

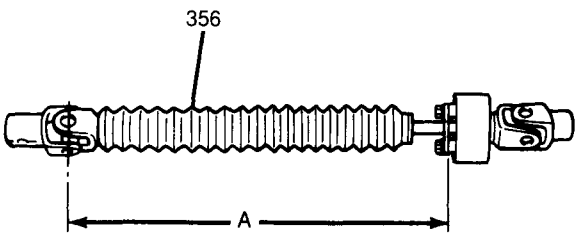

A LOWER STEERING SHAFT LENGTH W/POWER STEERING — 287 mm (11.30")
LOWER STEERING SHAFT LENGTH W/MANUAL STEERING — 332 mm (13.07")
356 LOWER STEERING SHAFT NC3010-3F1-JT-RS

Figure 21 Measuring Lower Steering Shaft

2. Lower steering shaft length (Figure 21). If the length is shorter than specification, replace the lower steering shaft.

- Lower steering shaft length:
  With power steering – 287 mm (11.30-inches).
  With manual steering – 332 mm (13.07-inches).

3. Lower steering shaft runout using a J 8001 and a J 26900-13 (Figure 22). To ensure accuracy, clean area of the lower shaft where measurement will be taken. If runout exceeds specified limits, replace it with a new one.
   - Lower steering shaft maximum allowable runout – 2 mm (0.079-inch).

Inspect

1. Steering shaft joints and shaft for any damage such as cracks, breaks, malfunctions or excessive play. If anything is found faulty, replace as shaft assembly.
2. Steering shaft for smooth rotation. If found defective, replace as column assembly.

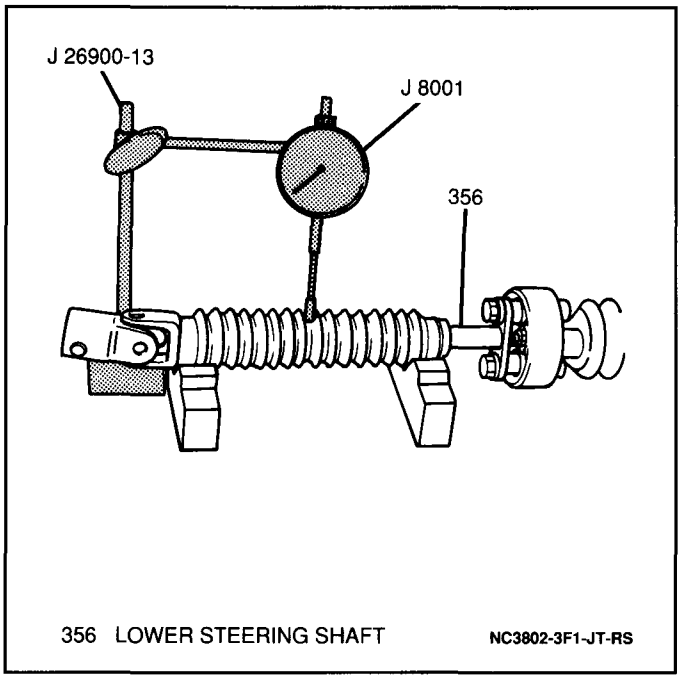

Figure 22 Measuring Lower Steering Shaft Runout

SPECIFICATIONS

FASTENER TORQUES

Steering Wheel Retaining Nut	33 N·m (24 lb.ft.)
Negative (-) Battery Cable-to-Negative (-) Battery Terminal Retainer	15 N·m (11 lb.ft.)
Steering Column Fastening Bolts	14 N·m (124 lb.in.)
Steering Shaft Joint Bolts	25 N·m (18 lb.ft.)
Lower Steering Shaft-to-Steering Gear Bolt	25 N·m (18 lb.ft.)
Antilock Brake Valve Heat Shield Bolts	10 N·m (89 lb.in.)

STEERING COLUMN SPECIFICATIONS

Steering Column Capsule-to-Slot Clearance	1 mm (0.039 in.)
Steering Column Length	
Standard	780 mm (30.70 in.)
Minimum	778 mm (30.63 in.)
Lower Steering Shaft Length	
With Power Steering	287 mm (11.30 in.)
With Manual Steering	332 mm (13.07 in.)
Lower Steering Shaft Maximum Allowable Runout	2 mm (0.079 in.)

SERVICE PARTS INFORMATION

Component Name Used in Section 3F2	Reference Name in Service Parts Catalog	Group Number
Steering Wheel	Wheel, Steering	6.513
Horn Pad	Button, Steering Wheel Horn	2.819
Combination Switch	Switch Assm, Steering Wheel	2.895
Column Covers	Covers, Steering Wheel	6.518
Steering Column	Column, Strg	6.518
Lower Steering Shaft	Shaft, Steering Column Lower	6.524
Ignition Switch	Lock, Steering	2.188

SPECIAL TOOLS

1
J 26900-13

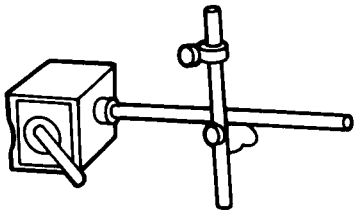

3
J 8001

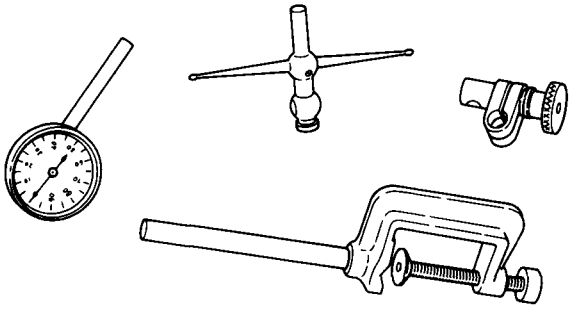

2
J 1859-A

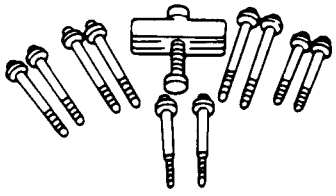

1 MAGNETIC BASE
2 STEERING WHEEL PULLER
3 DIAL INDICATOR

NC3803-3F1-JT-RS

SECTION 4

Drive Axles

CONTENTS

Propeller Shaft 4A-1
Rear Axle 4B-1
Front Axle 4C-1

Geo

SECTION 4A

PROPELLER SHAFT

NOTICE: When fasteners are removed, always reinstall them at the same location from which they were removed. If a fastener needs to be replaced, use the correct part number fastener for that application. If the correct part number fastener is not available, a fastener of equal size and strength (or stronger) may be used. Fasteners that are not reused, and those requiring thread-locking compound, will be called out. The correct torque values must be used when installing fasteners that require them. If the above procedures are not followed, parts or system damage could result.

CONTENTS

General Description 4A-1
Propeller Shaft 4A-1
Universal Joint 4A-3
Diagnosis 4A-3
Road Test 4A-3
Coast Test 4A-3
Universal Joint Noises 4A-4
On-Vehicle Service 4A-5
Propeller Shaft Runout Check 4A-5
Propeller Shaft Balance Check 4A-6
Propeller Shaft 4A-8
Universal Joints 4A-9
Pinion Flange Yoke Joint 4A-9
Sliding Yoke Joint 4A-13
Specifications 4A-14
Fastener Torques 4A-14
Propeller Shaft Specifications 4A-14
Service Parts Information 4A-14
Special Tools 4A-15

GENERAL DESCRIPTION

PROPELLER SHAFT

Figure 1

The propeller shaft is a balanced cylindrical shaft which transfers engine torque from the transmission or transfer case to the front or rear differential carrier through universal joints. The number of propeller shafts and universal joint assemblies can be either one propeller shaft and two universal joint assemblies (two-wheel drive), or two propeller shafts and four universal joint assemblies (four-wheel drive) (Figure 1). The sliding yoke is splined to the transmission or transfer case output shaft. The sliding yoke permits fore and aft movement of the propeller shaft as the differential moves up or down with suspension movement. The splines are lubricated internally by transmission or transfer case lubricant.

The pinion flange yoke is bolted to the differential pinion flange and needs no lubrication. The propeller shaft is designed and built with the yoke lugs in line with each other. This design produces the smoothest running shaft possible and is known as phasing. The propeller shaft will absorb vibrations from speeding up and slowing on each revolution of the universal joints. A total cancellation of vibration produces a smooth flow of power through the driveline.

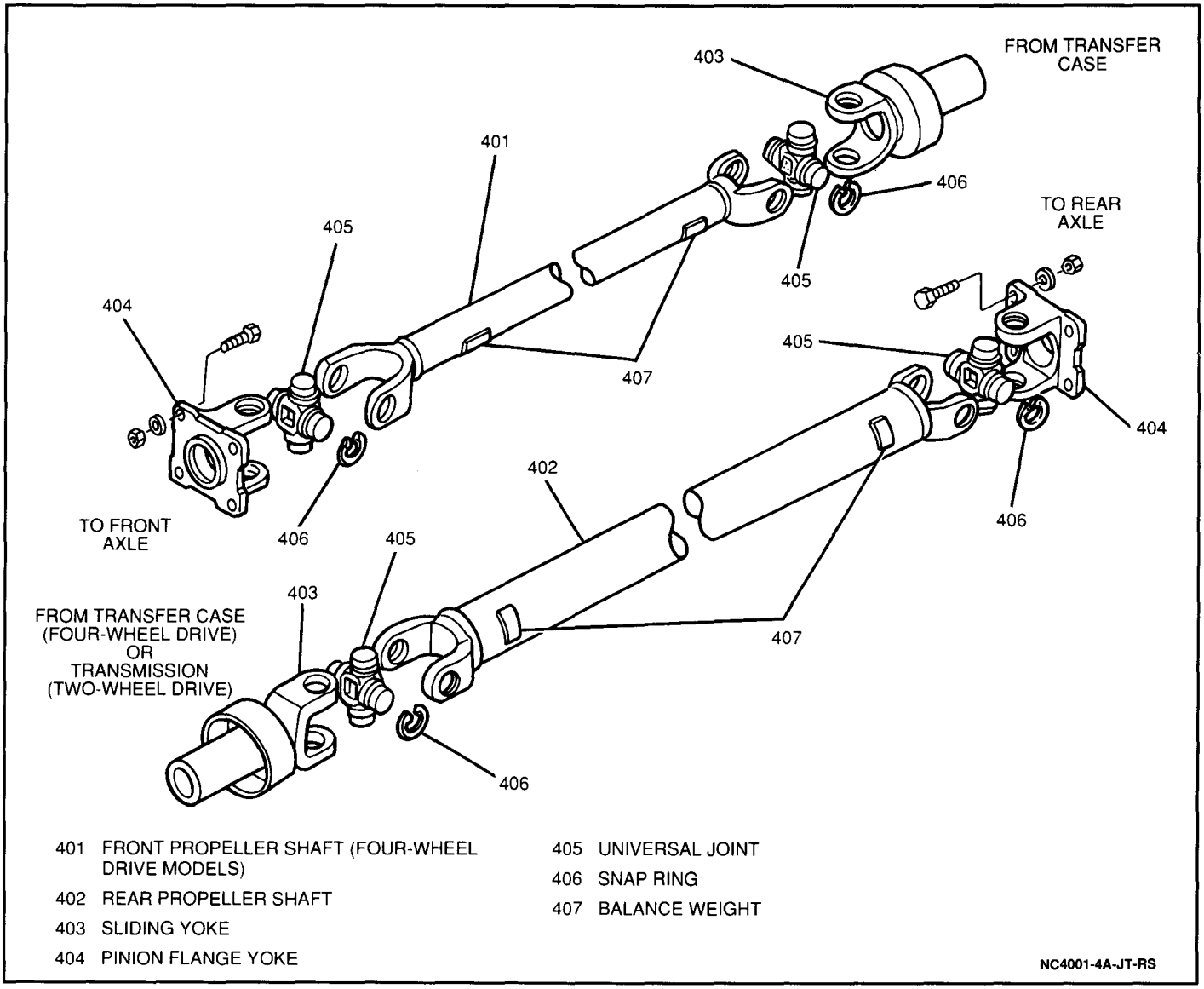

Figure 1 Front and Rear Propeller Shafts (Front Propeller Shaft Available on Four-Wheel Drive Models Only)

When servicing the propeller shaft and its components, care must be exercised during removal and installation procedures to make sure the propeller shaft is installed in the same position from which it was removed. It is necessary to make index marks (reference marks) on the propeller shaft pinion flange yoke and differential pinion flange before removing them to ensure correct installation and alignment. If this precaution is not observed, a driveline imbalance may result, causing vibration, premature component wear or other undesirable problems.

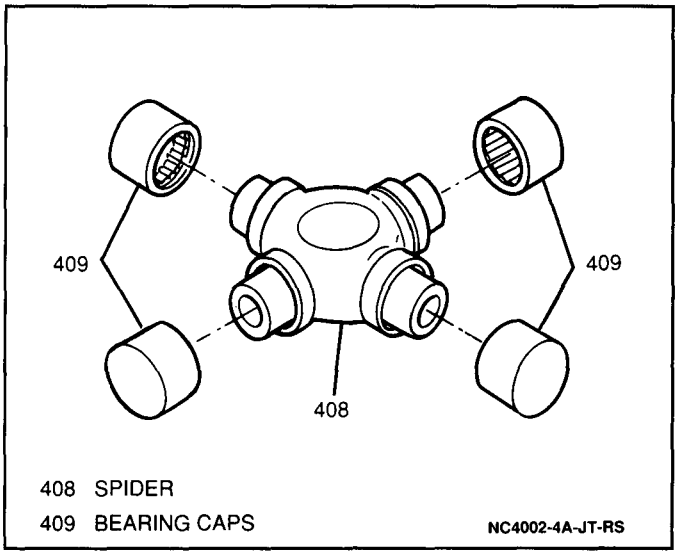

Figure 2 Universal Joint — Typical

UNIVERSAL JOINT

Figure 2

A universal joint consists of bearing assemblies connected by a crossmember called a spider. The spider is shaped like a cross and has arms of equal length. The bearings used in universal joints are the needle roller type and revolve around the ends of the spider inside bearing caps which act as races. The bearing caps are fitted into the propeller shaft yokes and are held in place with snap rings. The universal joint is designed to handle the effects of various loadings and axle windup during acceleration.

The universal joints will operate safely and efficiently within design angle variations. When the design angle is changed or exceeded, the operational life of the joint may decrease. Universal joints are lubricated and sealed during manufacturing and do not require maintenance. If a universal joint becomes noisy or worn, it must be replaced as an assembly.

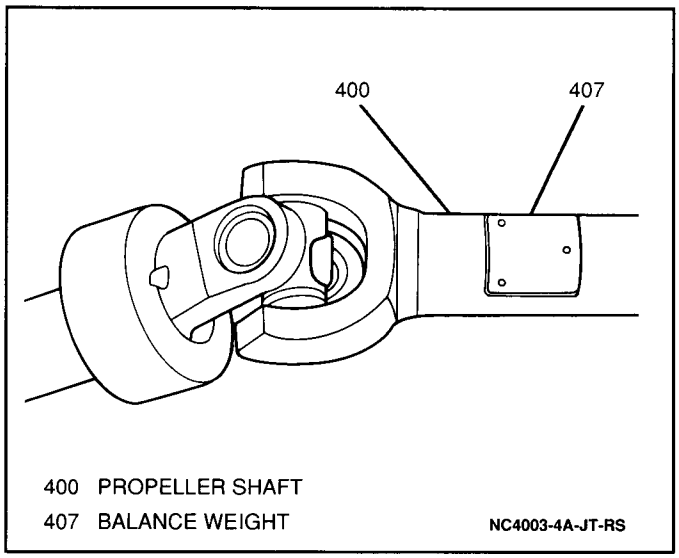

Figure 3 Balance Weight — Typical

DIAGNOSIS

If a problem is suspected of originating in the driveline, it is necessary to identify the component causing the problem. Since the propeller shaft rotates according to vehicle speed, the component responsible can be anything that rotates proportionally with vehicle speed (i.e., wheels, tires, brake rotors, brake drums). Most driveline problems can usually be classified in one of two categories: noise or vibration. The road test is a beneficial way to help the technician verify the problem and locate the suspected component causing the noise or vibration.

When diagnosing a driveline noise or vibration, there are four major component groups that can usually cause or contribute to a noise or vibration:

- Engine and mounts
- Clutch and transmission
- Tires, wheels and brake drums and rotors
- Propeller shaft and universal joints

ROAD TEST

Figures 3 and 4

Before road testing the vehicle, several inspections must be made to rule out other components which may cause or contribute to the problem.

Inspect

1. Propeller shaft for missing or loose balance weights (Figure 3). If balance weights are loose or missing, the propeller shaft must be balanced or replaced.
2. All fasteners for tightness and correct torque specifications at universal joints, wheel nuts and engine mounts.
3. Tires for correct inflation pressure. Refer to the tire placard located on the driver's door jamb for correct tire inflation information.
4. Vehicle for correct load conditions. Refer to the tire placard located on the driver's door jamb for correct vehicle load specifications.

When road testing the vehicle, verify that the condition exists and record the speed and rpm at which the condition is most pronounced. A vibration is likely to be felt in two places; the steering wheel or in the seat cushion. The road test is also helpful in determining the location of a noise or vibration in either the front or rear of the vehicle.

COAST TEST

Figure 4

NOTICE: When performing a "Coast Test" on a vehicle equipped with an automatic transmission, care must be exercised when returning the selector lever from "N" (neutral) to "D" (drive) or transmission damage may occur. When shifting from "N" (neutral) to "D" (drive) during a "Coast Test," use the following procedure:

1. Maintain engine speed at 1500 rpm.
2. Apply brakes and gradually slow vehicle to 40 km/h (25 mph).
3. Return selector lever to "D" (drive).

This test helps determine in what area the vibration or noise exists. Drive the vehicle past the vibration or noise speed, shift the transmission into neutral, and coast back through the speed at which the vibration or noise occurs. At this stage, one of two types of vibration or noise normally occurs. A "shaking" type of vibration is usually a tires or a wheel and brake drum/disc assembly problem. A "buzzing" type noise or vibration is usually a driveline problem. Use the "Propeller Shaft Diagnosis" chart to determine possible causes of propeller shaft conditions (Figure 4).

CONDITION	INSPECT COMPONENT	FOR PROBABLE CAUSE
FLUID LEAK AT FRONT OR REAR SLIDING YOKE JOINT	SLIDING YOKE JOINT	ROUGH, NICKED OR BURRED SURFACE WHERE SEAL MAKES CONTACT
	TRANSMISSION OR TRANSFER CASE OUTPUT SHAFT SEALS	CUT SEALS OR BROKEN GARTER SPRING
PING, SNAP OR CLICK IN DRIVELINE ON INITIAL LOAD WITH THE TRANSMISSION IN GEAR	FRONT OR REAR CONTROL ARMS	LOOSE OR WORN BUSHINGS
	PINION FLANGE YOKE JOINT	WEAR OR DAMAGE
KNOCKING OR CLUNKING IN DRIVELINE WHEN VEHICLE IS OPERATED UNDER FLOAT CONDITION AT 16 km/h (10 mph) IN HIGH GEAR OR NEUTRAL	SLIDING YOKE JOINT	WEAR OR DAMAGE
	PINION FLANGE YOKE JOINT	WEAR OR DAMAGE
	FRONT OR REAR DIFFERENTIAL SIDE GEARS	EXCESSIVE GEAR BACKLASH OR WEAR
SHUDDER ON LOW SPEED ACCELERATION	SLIDING YOKE JOINT	WEAR OR DAMAGE
	PINION FLANGE YOKE JOINT	WEAR OR DAMAGE
	VEHICLE HEIGHT	EXCESSIVE JOINT ANGLE
ROUGHNESS OR VIBRATION ABOVE 48 km/h (30 mph)	PROPELLER SHAFT	UNDERCOATING OR OTHER FOREIGN MATERIAL
		LOOSE OR MISSING BALANCE WEIGHTS
		DISTORTED OR DAMAGED JOINT YOKES
		RUNOUT, DENTS OR DAMAGE
	SLIDING YOKE JOINT	WEAR OR DAMAGE
	PINION FLANGE YOKE JOINT	WEAR OR DAMAGE
	FRONT OR REAR TIRES AND WHEELS	UNDER-INFLATION OR IMBALANCE
	VEHICLE HEIGHT	EXCESSIVE JOINT ANGLE

NC4004-4A-JT-RS

Figure 4 Propeller Shaft Diagnosis Chart

UNIVERSAL JOINT NOISES

Figure 5

If a universal joint is suspected of producing a rattling or knocking noise, the universal joint may be worn or loose. Make a preliminary inspection by grasping the propeller shaft toward the end near the suspected universal joint and rotate it back and forth. Then, move the propeller shaft in an up and down direction while feeling for any looseness (Figure 5). If the propeller shaft shows excessive movement, the universal joint should be removed and inspected for wear or damage.

Inspect

1. Needle bearings for locking or wear. If needle bearings exhibit signs of locking or wear, replace the universal joint as an assembly. Refer to "Universal Joints" later in this section.

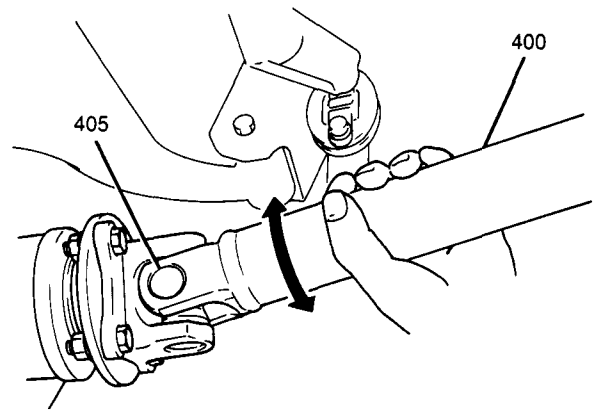

400 PROPELLER SHAFT
405 UNIVERSAL JOINT

NC4005-4A-JT-RS

Figure 5 Inspecting Universal Joints

2. Bearing surfaces on spiders for wear or flat spots. If spider bearing surfaces exhibit flat spots or appear worn, replace the universal joint as an assembly. Refer to "Universal Joints" later in this section.
3. Bearing caps for cracks or other damage. If bearing caps are damaged in any way, replace the universal joint as an assembly. Refer to "Universal Joints" later in this section.

ON-VEHICLE SERVICE

PROPELLER SHAFT RUNOUT CHECK

Figures 6, 7 and 8

If a noise vibration is present in the vehicle driveline, the propeller shaft may be out of round due to damage. This check will help to determine if the propeller shaft and its attaching driveline components are "true" or turning with an absolute minimum amount of lateral movement.

Tool Required:
J 7872 Magnetic Base Indicator Set

1. Place selector lever in "N" (neutral) position.
2. Raise and suitably support vehicle. Refer to SECTION 0A.

Inspect

- Propeller shaft for any dents or damage. If any portion of the propeller shaft appears dented or damaged, replace the propeller shaft. Refer to "Propeller Shaft" under "On-Vehicle Service" later in this section.

3. Install a J 7872 to the vehicle undercarriage and place the indicator plunger on the propeller shaft (Figure 6).

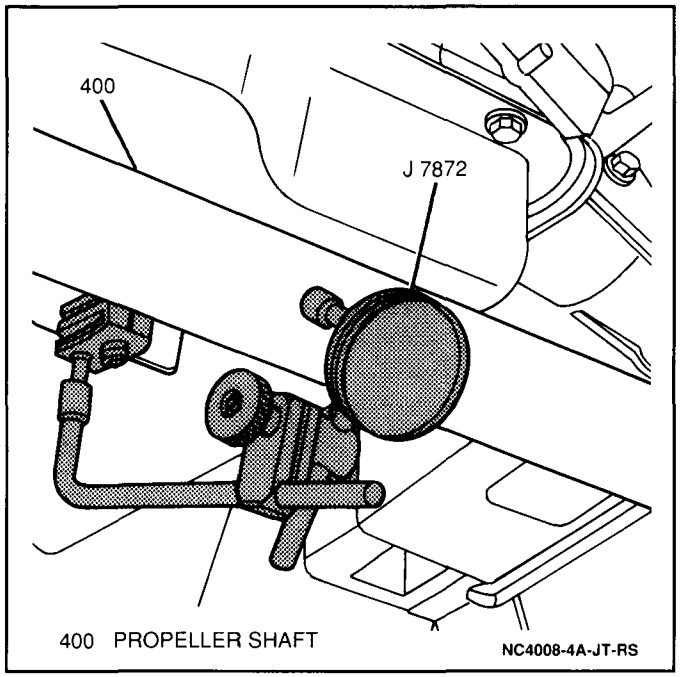

Figure 6 Measuring Propeller Shaft Runout

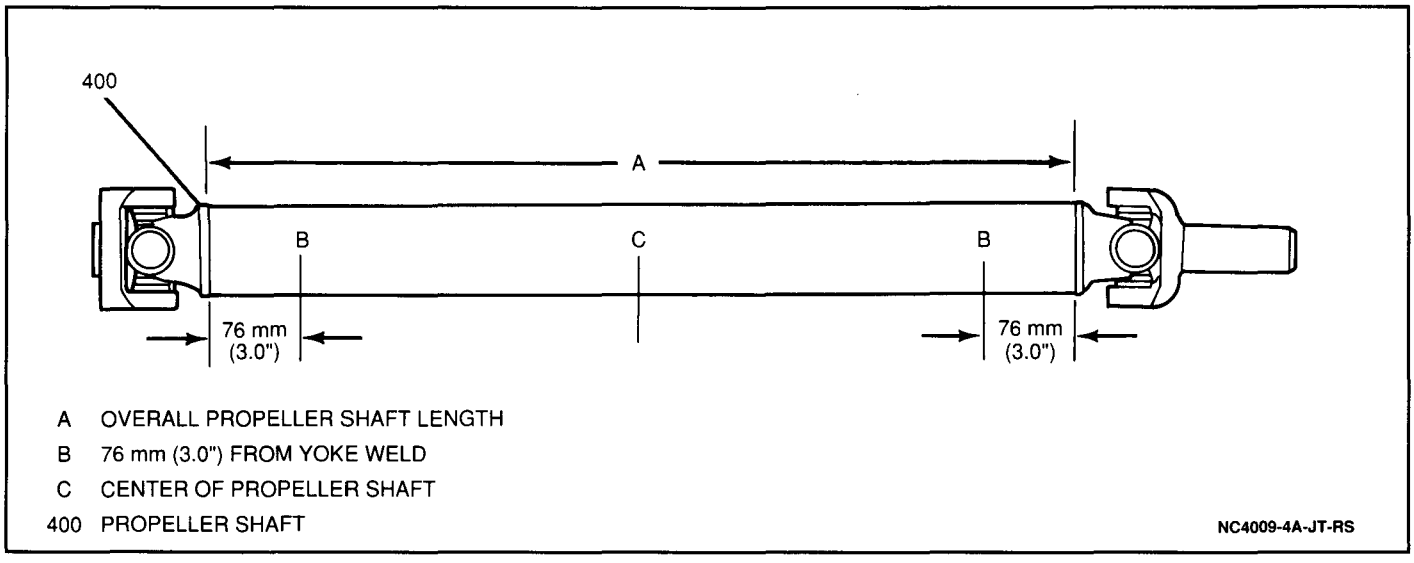

Figure 7 Dial Indicator Placement

Measure

- Propeller shaft in three separate positions (Figure 7): at the center, and 76.2 mm (3.0-inches) from each yoke weld. Slowly turn one of the rear wheels in order to rotate the propeller shaft. Record the highest dial indicator reading in all three locations.

4. After all readings have been recorded, remove the J 7872.
5. Lower vehicle.

Propeller shaft runout should not exceed 0.8 mm (0.031-inch). If runout exceeds specification, remove the propeller shaft at the differential pinion flange. Refer to "Propeller Shaft" under "On-Vehicle Service" later in this section. Without removing the sliding yoke from the transmission or transfer case, rotate the shaft 180 degrees (½ turn). Then, reconnect the shaft to the differential pinion flange and recheck runout. If runout is still beyond specification at one or more check points, remove the propeller shaft and place in two V-blocks. Recheck runout while slowly rotating the propeller shaft in the two V-blocks (Figure 8). If runout still exceeds specification, replace the propeller shaft. If runout no longer exceeds specification, the differential pinion flange, transmission output shaft or transfer case output shaft may be out of round. Refer to SECTION 4B for rear axle service procedures, SECTION 4C for front axle service procedures, AUTOMATIC TRANSMISSION — UNIT REPAIR (SECTION 3L30) for automatic transmission service procedures, SECTION 7B1 for manual transmission service procedures or SECTION 7D for transfer case service procedures.

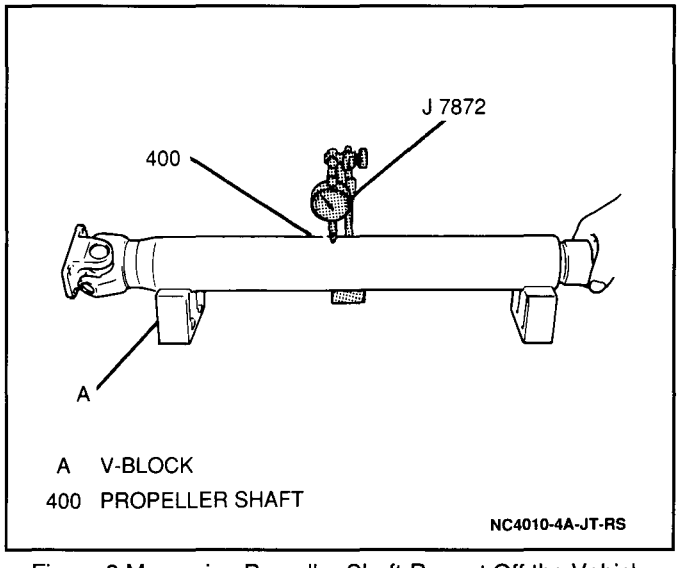

Figure 8 Measuring Propeller Shaft Runout Off the Vehicle

PROPELLER SHAFT BALANCE CHECK

Figures 9 and 10

1. Raise and suitably support vehicle. Refer to SECTION 0A.
2. Remove tire and wheel assemblies. Refer to SECTION 3E.

3. Remove brake drums and rotors. Refer to SECTION 5.
4. Clean the propeller shaft, universal joints and attaching parts of any mud, undercoating or foreign material.
5. Inspect the propeller shaft, universal joints and attaching parts for loose fasteners or balance weights. Tighten any loose fasteners to specification. If balance weights are loose or missing, the propeller shaft must be balanced or replaced.
6. Lower vehicle.
7. Start engine.
8. Operate the vehicle in gear at the speed and rpm at which the vibration or noise occurs and observe the intensity of the problem.
9. Turn ignition switch to the "OFF" position.
10. Place selector lever in "N" (neutral) position.
11. Raise and suitably support vehicle. Refer to SECTION 0A.
12. Place index marks (reference marks) on the pinion flange yoke and the differential pinion flange in order to ensure proper installation (Figure 9).

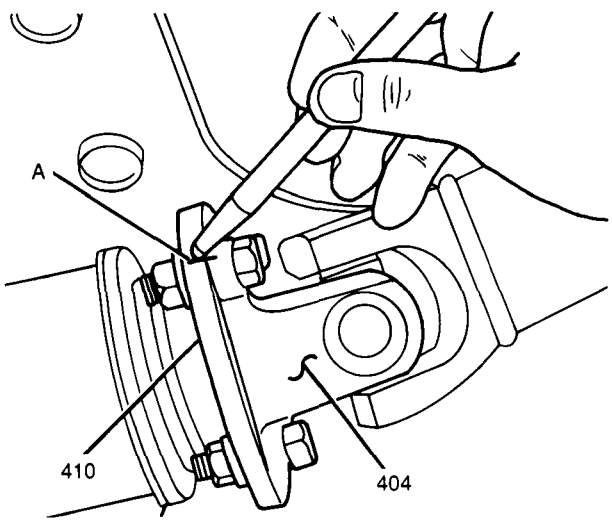

A INDEX MARK (REFERENCE MARK)
404 PINION FLANGE YOKE
410 DIFFERENTIAL PINION FLANGE
NC4006-4A-JT-RS

Figure 9 Placing Index Marks on Pinion Flange Yoke and Differential Pinion Flange

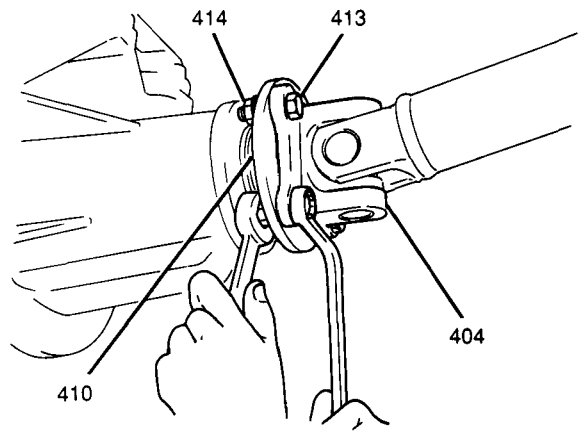

404 PINION FLANGE YOKE
410 DIFFERENTIAL PINION FLANGE
413 PROPELLER SHAFT BOLT
414 PROPELLER SHAFT NUT
NC4007-4A-JT-RS

Figure 10 Removing Propeller Shaft Bolts and Nuts

13. Remove four bolts, four nuts and separate propeller shaft pinion flange yoke from differential pinion flange (Figure 10).
14. Rotate propeller shaft 180 degrees (½ turn) from its original position.
15. Install pinion flange yoke to differential pinion flange; secure with four bolts and four nuts.

Tighten

- Propeller shaft bolts and nuts to 50 N·m (37 lb.ft.).

16. Lower vehicle.
17. Start engine.
18. Operate the vehicle in gear at the speed and rpm at which the vibration or noise occurred previously and observe the intensity of vibration or noise in comparison with the previous amount.
19. Turn ignition switch to the "OFF" position.
20. Raise and suitably support vehicle. Refer to SECTION 0A.
21. Install brake drums and rotors. Refer to SECTION 5.
22. Install tire and wheel assemblies. Refer to SECTION 3E.
23. Lower vehicle.

Determine the propeller shaft position which gives the best driveline response by road testing the vehicle for a final check of the propeller shaft balance. If the balance is unacceptable, the propeller shaft must be balanced or replaced.

PROPELLER SHAFT

Figures 9 through 14

Remove or Disconnect

- Raise and suitably support vehicle. Refer to SECTION 0A.
- Place a drain pan or suitable container underneath transfer case (four-wheel drive models).

1. Transfer case oil level/filler plug from transfer case (four-wheel drive models).
2. Transfer case drain plug from transfer case and drain transfer case oil (four-wheel drive models).

- Place index marks (reference marks) on the pinion flange yoke and the differential pinion flange (Figure 9).

3. Four bolts, four nuts and separate pinion flange yoke from differential pinion flange (Figure 10).
4. Sliding yoke from transmission or transfer case and remove propeller shaft from vehicle (Figure 11).

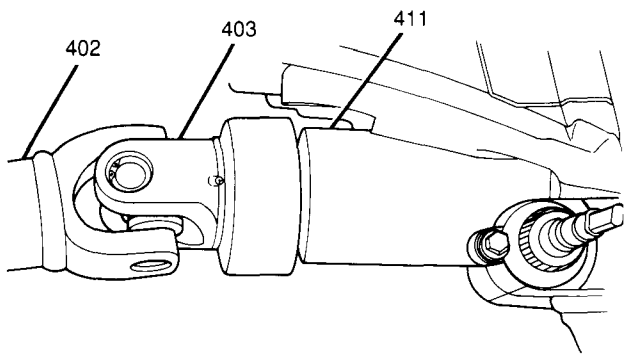

400 PROPELLER SHAFT
403 SLIDING YOKE
411 TRANSFER CASE
NC4011-4A-JT-RS

Figure 11 Sliding Yoke at Transfer Case

Inspect

1. Propeller shaft for dents or other damage. If shaft appears damaged, replace it.
2. Universal joints for smooth pivoting. If universal joints bind or appear tight, replace them as assemblies. Refer to "Universal Joints" later in this section.
3. Sliding yoke splines for excessive wear or damage. If splines appear worn or rounded, replace the sliding yoke. Refer to "Sliding Yoke Joint" later in this section (Figure 12).

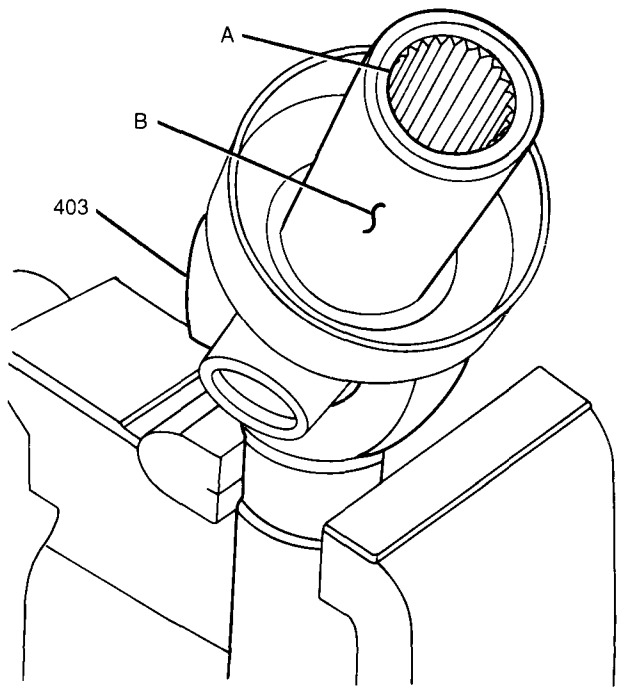

A SLIDING YOKE SPLINES
B SLIDING YOKE SURFACE
403 SLIDING YOKE
NC4012-4A-JT-RS

Figure 12 Inspecting Sliding Yoke

4. Sliding yoke surface for scoring, burrs or other damage. If sliding yoke surface appears scored or rough, replace it. Refer to "Sliding Yoke Joint" later in this section (Figure 12).
5. Pinion flange yoke for cracks, distortion or other damage. If pinion flange yoke appears damaged or distorted, replace it. Refer to "Pinion Flange Yoke Joint" later in this section.

Install or Connect

1. Sliding yoke into transmission or transfer case (Figure 13).

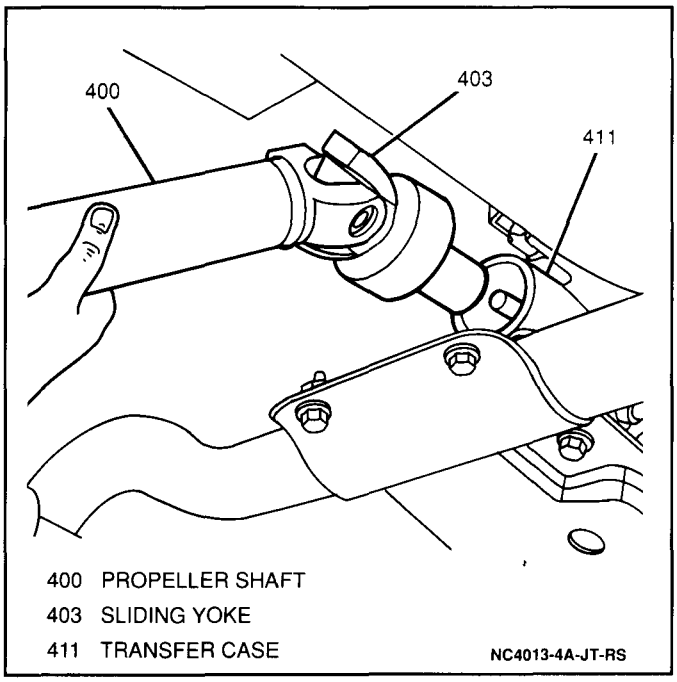

Figure 13 Installing Sliding Yoke Into Transfer Case

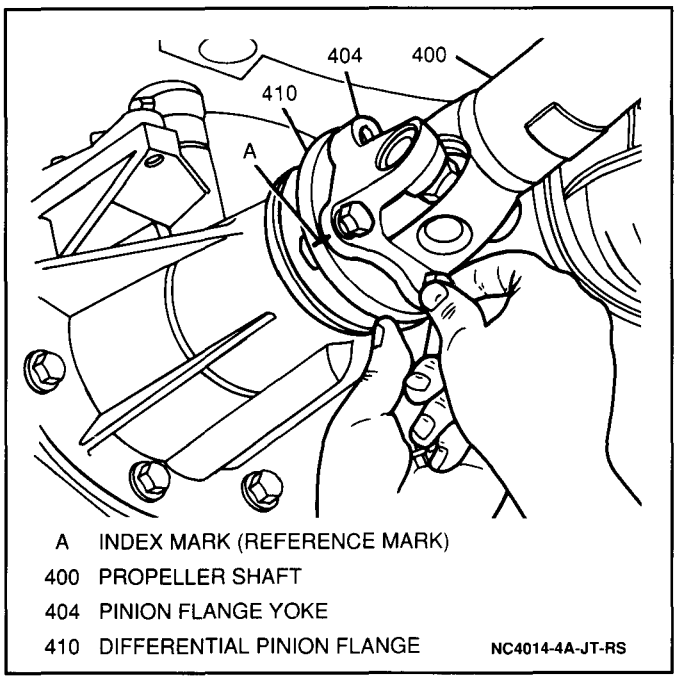

Figure 14 Installing Pinion Flange Yoke to Differential Pinion Flange

2. Pinion flange yoke to differential pinion flange aligning index marks (reference marks) on the pinion flange yoke and the differential pinion flange; secure with four bolts and four nuts (Figure 14).

Tighten

- Propeller shaft bolts and nuts to 50 N·m (37 lb.ft.).

- Apply Loctite® pipe sealant GM P/N 1052080, or equivalent, to the threaded portion of the transfer case drain plug (four-wheel drive models).

3. Transfer case drain plug into transfer case (four-wheel drive models).

Tighten

- Transfer case drain plug to 28 N·m (21 lb.ft.).

- Refill transfer case with approximately 1.7 liters (1.8 qts.) of synthetic gear lubricant GM P/N 12345836, or equivalent (four-wheel drive models).
- Apply Loctite® pipe sealant GM P/N 1052080, or equivalent, to the threaded portion of the transfer case oil level filler plug (four-wheel drive models).

4. Transfer case oil level/filler plug into transfer case (four-wheel drive models).

Tighten

- Transfer case oil filler/level plug to 28 N·m (21 lb.ft.).

- Remove drain pan from underneath transfer case (four-wheel drive models).
- Lower vehicle.

UNIVERSAL JOINTS

Pinion Flange Yoke Joint

Figures 15 through 23

Remove or Disconnect

1. Propeller shaft from vehicle. Refer to "Propeller Shaft" under "On-Vehicle Service" earlier in this section.
2. Two snap rings from pinion flange yoke (Figure 15).

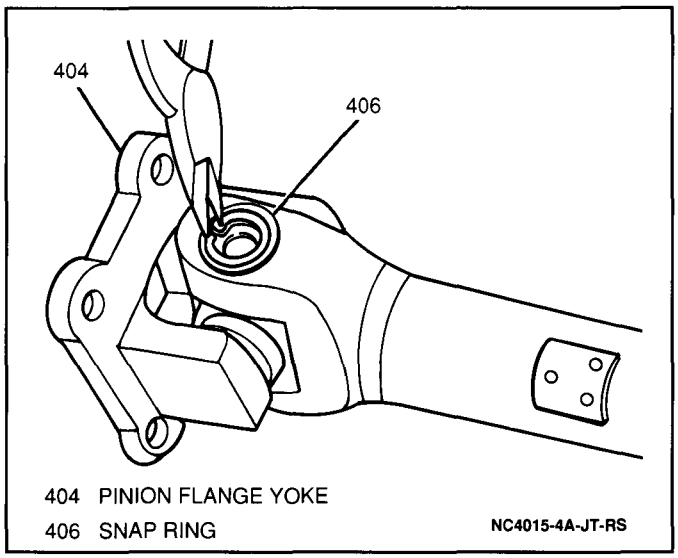

Figure 15 Removing Snap Ring From Pinion Flange Yoke

- Apply moisture displacing lubricant GM P/N 1052864, or equivalent, to the outside of the pinion flange yoke joint bearing caps.
- Using an 18 mm socket in conjunction with a 24 mm socket and soft-jaw vise, place the pinion flange yoke into the soft-jaw vise with the 18 mm socket acting as a driver and the 24 mm socket acting as a hollow support. Tighten the vise until the bearing cap inside of the 24 mm socket has been exposed approximately 3 to 4 mm (0.12 to 0.16-inch) (Figure 16).

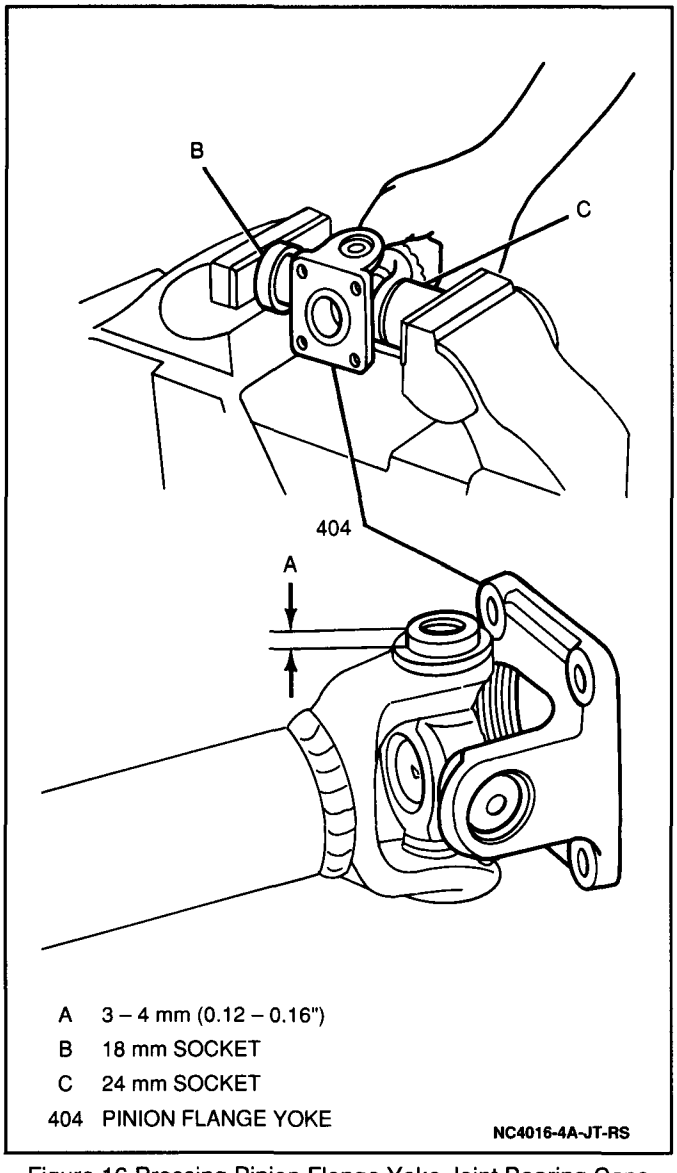

Figure 16 Pressing Pinion Flange Yoke Joint Bearing Caps

3. Bearing cap from pinion flange yoke by placing the exposed portion of the bearing cap into a soft-jaw vise and tapping upwards on the pinion flange yoke with a hammer until the bearing cap is free of the pinion flange yoke.
- Insert the 18 mm socket through the bearing cap opening in the pinion flange yoke and tap the socket gently with a hammer until the opposite bearing cap is exposed approximately 3 to 4 mm (0.12 to 0.16-inch).

4. Opposite bearing cap from pinion flange yoke by placing the exposed portion of the bearing cap into a soft-jaw vise and tapping upwards on the pinion flange yoke with a hammer until the bearing cap is free of the pinion flange yoke.
5. Pinion flange yoke from spider.
6. Two snap rings from propeller shaft yoke (Figure 17).

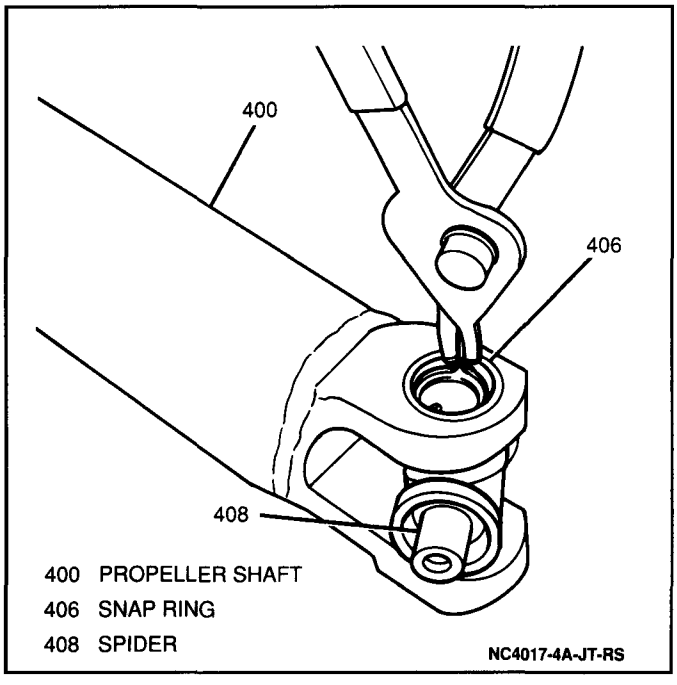

Figure 17 Removing Propeller Shaft Yoke Snap Ring

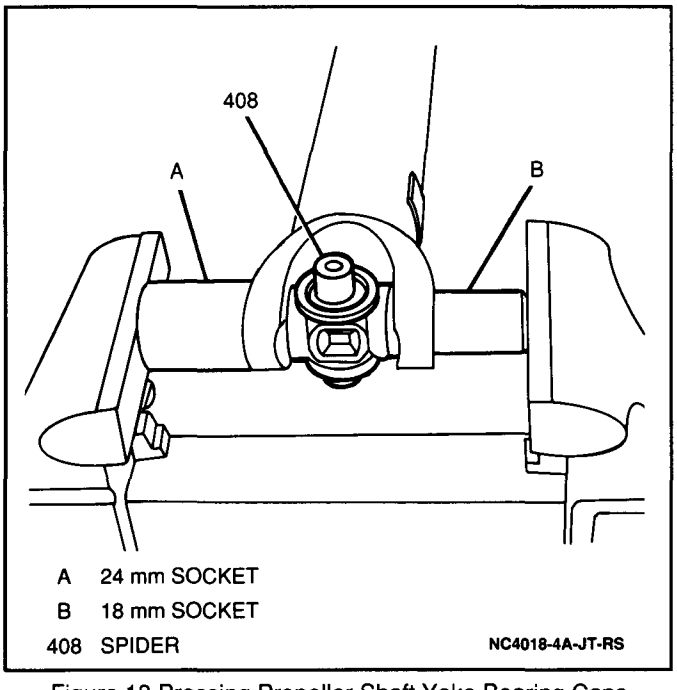

Figure 18 Pressing Propeller Shaft Yoke Bearing Caps

- Using an 18 mm socket in conjunction with a 24 mm socket and soft-jaw vise, place the propeller shaft yoke into the soft-jaw vise with the 18 mm socket acting as a driver and the 24 mm socket acting as a hollow support. Tighten the vise until the bearing cap inside of the 24 mm socket has been exposed approximately 3 to 4 mm (0.12 to 0.16-inch) (Figure 18).

7. Bearing cap from propeller shaft yoke by placing the exposed portion of the bearing cap into a soft-jaw vise and tapping upwards on the propeller shaft yoke with a hammer until the bearing cap is free of the propeller shaft yoke (Figure 19).

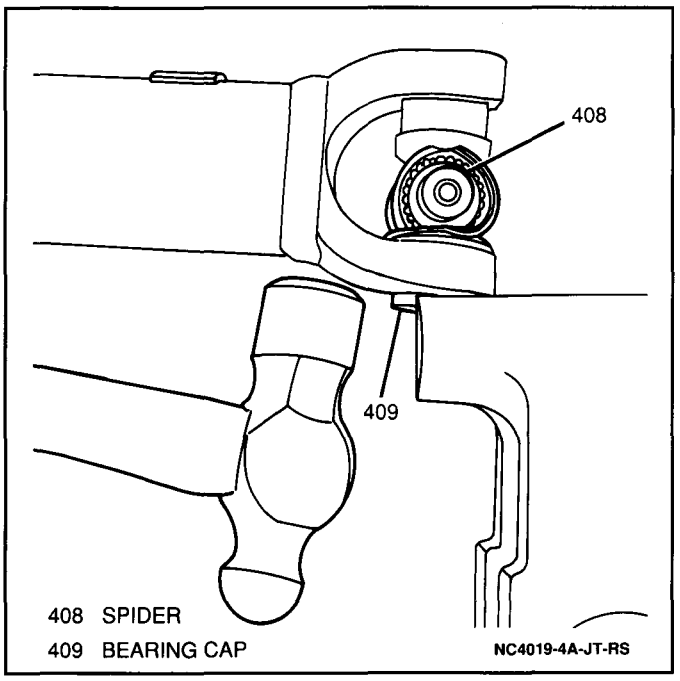

Figure 19 Removing Bearing Cap From Propeller Shaft Yoke

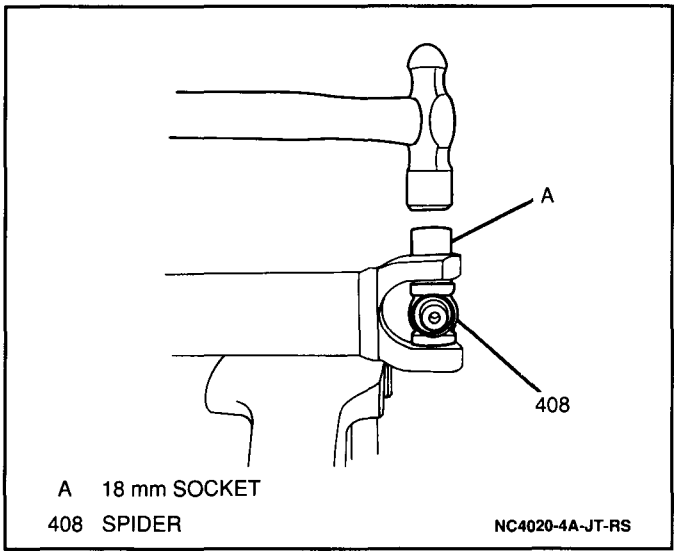

Figure 20 Removing Opposite Bearing Cap

8. Opposite bearing cap by inserting the 18 mm socket through the bearing cap opening in the propeller shaft yoke and tapping on the socket gently with a hammer until the opposite bearing cap is exposed approximately 3 to 4 mm (0.12 to 0.16-inch) (Figure 20).
9. Opposite bearing cap from propeller shaft yoke by placing the exposed portion of the bearing cap into a soft-jaw vise and tapping upwards on the propeller shaft yoke with a hammer until the bearing cap is free of the propeller shaft yoke.
10. Spider from propeller shaft yoke.

Inspect

1. Propeller shaft yoke for distortion, cracks or other damage. If propeller shaft yoke appears distorted or damaged, replace it. Refer to "Propeller Shaft" under "On-Vehicle Service" earlier in this section.
2. Pinion flange yoke for distortion, cracks or other damage. If pinion flange yoke appears distorted or damaged, replace it.
3. Bearing caps for broken or missing needle bearings. If needle bearing appears missing or worn, replace universal joint as an assembly (Figure 21).

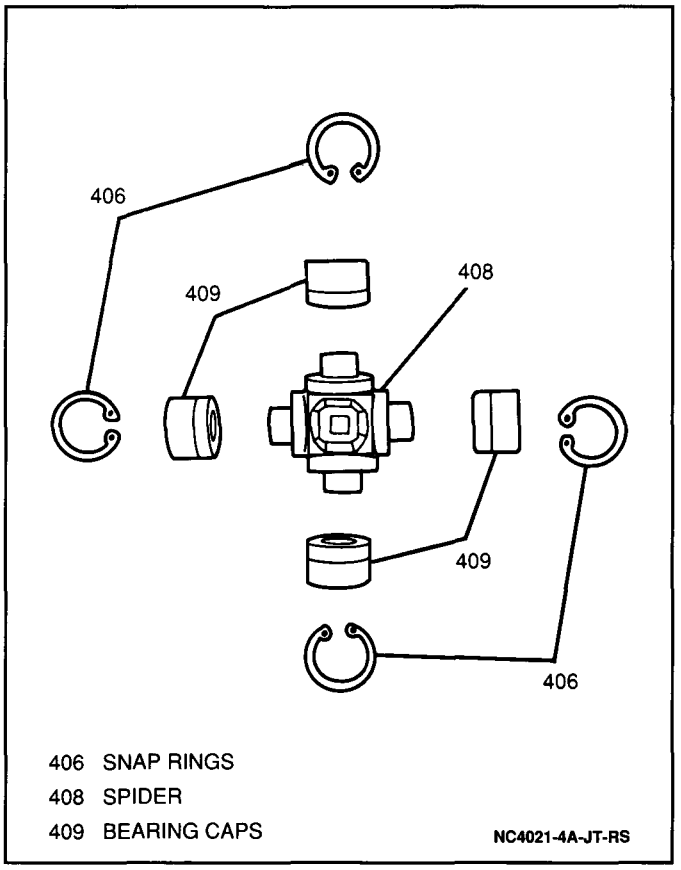

Figure 21 Inspecting Universal Joint Components

4. Bearing surfaces on the spider for flat spots or excessive wear. If bearing surfaces on spider appear worn or flat, replace universal joint as an assembly (Figure 21).

Important

- If any unusual wear or damage is found on any component upon universal joint inspection, DO NOT attempt to repair or replace the component. Replace the universal joint as an assembly.

Install or Connect

1. Spider into propeller shaft yoke.

NOTICE: During bearing cap installation, make sure that the needle bearings are correctly positioned. If the needle bearings become mispositioned during installation, damage to the needle bearings and spider will result (Figure 22).

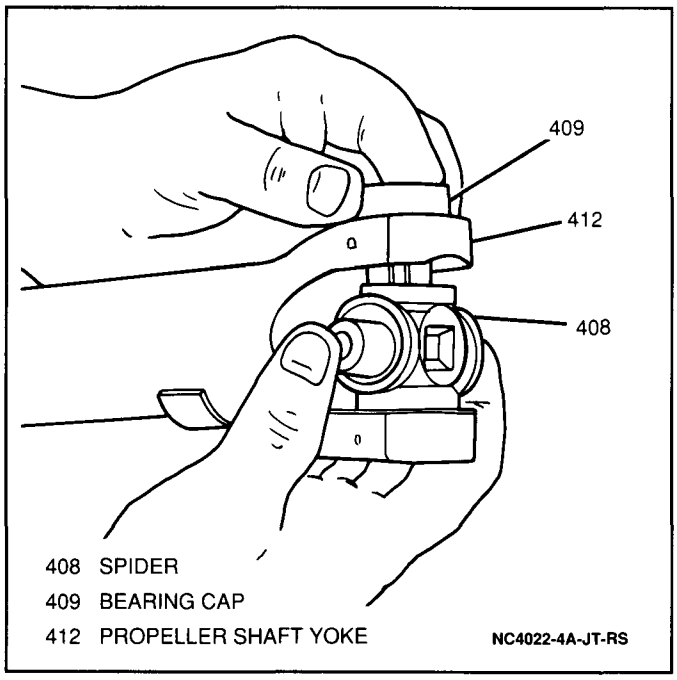

Figure 22 Installing Bearing Cap Onto Spider

- Apply moisture displacing lubricant GM P/N 1052864, or equivalent, to the outside of the pinion flange yoke joint bearing caps.
2. One bearing cap into propeller shaft yoke and tapping gently with a hammer making sure the bearing cap fits smoothly over the pinion flange yoke joint spider.
3. Opposite bearing cap into propeller shaft yoke and tapping gently with a hammer until a snap ring can be fitted.
4. One snap ring into the propeller shaft yoke.

Inspect

- Snap ring upon installation. Make sure the snap ring is completely seated and firm.

- Using an 18 mm socket in conjunction with a 24 mm socket and soft-jaw vise, place the propeller shaft yoke into the soft-jaw vise with the 18 mm socket acting as a driver and the 24 mm socket acting as a hollow support. Tighten the vise until the opposite bearing cap is pressed into the propeller shaft yoke so that a snap ring can be fitted.
5. One snap ring into propeller shaft yoke.

Inspect

- Snap ring upon installation. Make sure the snap ring is completely seated and firm.

6. Pinion flange yoke onto spider (Figure 23).

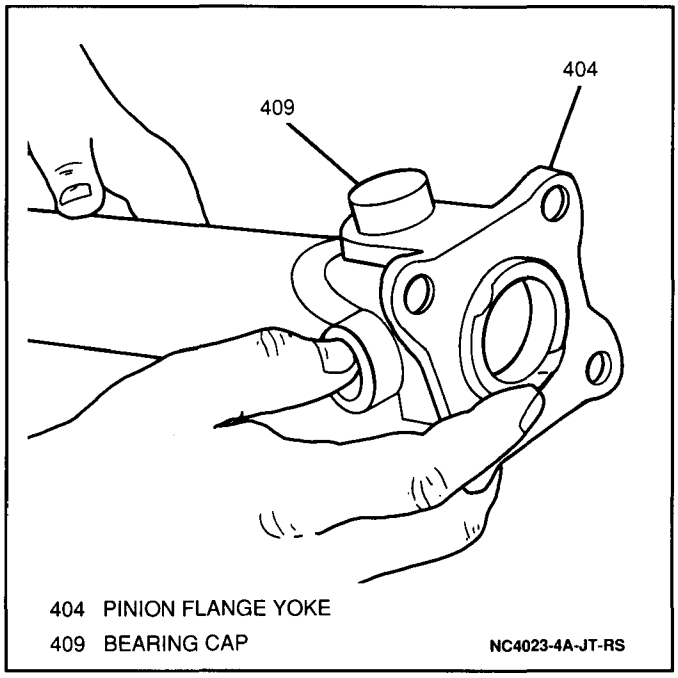

Figure 23 Installing Pinion Flange Yoke

7. Bearing cap into pinion flange yoke and tapping gently with a hammer making sure the bearing cap fits smoothly over the spider (Figure 23).
8. Opposite bearing cap into pinion flange yoke and tapping gently with a hammer until a snap ring can be fitted.
9. One snap ring into pinion flange yoke.

Inspect

- Snap ring upon installation. Make sure the snap ring is completely seated and firm.

- Using an 18 mm socket in conjunction with a 24 mm socket and soft-jaw vise, place the pinion flange yoke into the soft-jaw vise with the 18 mm socket acting as a driver and the 24 mm socket acting as a hollow support. Tighten the vise until the opposite bearing cap is pressed into the pinion flange yoke so that a snap ring can be fitted.

10. One snap ring into pinion flange yoke.

Inspect

- Snap ring upon installation. Make sure the snap ring is completely seated and firm.

11. Propeller shaft into vehicle. Refer to "Propeller Shaft" under "On-Vehicle Service" earlier in this section.

Sliding Yoke Joint

Figures 17 through 22

Remove or Disconnect

1. Propeller shaft from vehicle. Refer to "Propeller Shaft" under "On-Vehicle Service" earlier in this section.
2. Two snap rings from sliding yoke.

- Apply moisture displacing lubricant GM P/N 1052864, or equivalent, to the outside of the sliding yoke joint bearing caps.
- Using an 18 mm socket in conjunction with a 24 mm socket and soft-jaw vise, place the sliding yoke into the soft-jaw vise with the 18 mm socket acting as a driver and the 24 mm socket acting as a hollow support. Tighten the vise until the bearing cap inside of the 24 mm socket has been exposed approximately 3 to 4 mm (0.12 to 0.16-inch).

3. Bearing cap from sliding yoke by placing the exposed portion of the bearing cap into a soft-jaw vise and tapping upwards on the sliding yoke with a hammer until the bearing cap is free of the sliding yoke.

- Insert the 18 mm socket through the bearing cap opening in the sliding yoke and tap gently with a hammer until the opposite bearing cap is exposed approximately 3 to 4 mm (0.12 to 0.16-inch).

4. Opposite bearing cap from sliding yoke by placing the exposed portion of the bearing cap into a soft-jaw vise and tapping upwards on the sliding yoke with a hammer until the bearing cap is free of the sliding yoke.
5. Sliding yoke from spider.
6. Two snap rings from propeller shaft yoke (Figure 17).

- Using an 18 mm socket in conjunction with a 24 mm socket and soft-jaw vise, place the propeller shaft yoke into the soft-jaw vise with the 18 mm socket acting as a driver and the 24 mm socket acting as a hollow support. Tighten the vise until the bearing cap inside of the 24 mm socket has been exposed approximately 3 to 4 mm (0.12 to 0.16-inch) (Figure 18).

7. Bearing cap from propeller shaft yoke by placing the exposed portion of the bearing cap into a soft-jaw vise and tapping upwards on the propeller shaft yoke with a hammer until the bearing cap is free of the propeller shaft yoke (Figure 19).
8. Opposite bearing cap by inserting the 18 mm socket through the bearing cap opening in the propeller shaft yoke and tapping on the socket gently with a hammer until the opposite bearing cap is exposed approximately 3 to 4 mm (0.12 to 0.16-inch) (Figure 20).
9. Opposite bearing cap from propeller shaft yoke by placing the exposed portion of the bearing cap into a soft-jaw vise and tapping upwards on the propeller shaft yoke with a hammer until the bearing cap is free of the propeller shaft yoke.
10. Spider from propeller shaft yoke.

Inspect

1. Propeller shaft yoke for distortion, cracks or other damage. If shaft appears damaged, replace it. Refer to "Propeller Shaft" under "On-Vehicle Service" earlier in this section.
2. Sliding yoke for distortion, cracks or other damage. If sliding yoke appears worn or damaged, replace it.
3. Bearing caps and roller bearings for broken or missing bearings. If bearing caps appear damaged or have missing bearings, replace universal joint as an assembly (Figure 21).
4. Bearing surfaces on the universal joint spider for flat spots or excessive wear. Replace universal joint as an assembly (Figure 21).

Important

- If any unusual wear or damage is found on any component upon universal joint inspection, DO NOT attempt to repair or replace the component. Replace the universal joint as an assembly.

Install or Connect

1. Spider into propeller shaft yoke.

NOTICE: During bearing cap installation, make sure that the needle bearings are correctly positioned. If the needle bearings become mispositioned during installation, damage to the needle bearings and spider will result.

- Apply moisture displacing lubricant GM P/N 1052864, or equivalent, to the outside of the sliding yoke joint bearing caps.

2. One bearing cap into propeller shaft yoke and tapping gently with a hammer making sure the bearing cap fits smoothly over the spider (Figure 22).
3. Opposite bearing cap into propeller shaft yoke and tapping gently with a hammer until a snap ring can be fitted.
4. One snap ring into the propeller shaft yoke.

Inspect

- Snap ring upon installation. Make sure the snap ring is completely seated and firm.

- Using an 18 mm socket in conjunction with a 24 mm socket and soft-jaw vise, place the propeller shaft yoke into the soft-jaw vise with the 18 mm socket acting as a driver and the 24 mm socket acting as a hollow support. Tighten the vise until the opposite bearing cap is pressed into the propeller shaft yoke so that a snap ring can be fitted.

5. One snap ring into propeller shaft yoke.

Inspect

- Snap ring upon installation. Make sure the snap ring is completely seated and firm.

6. Sliding yoke onto spider.
7. Bearing cap into sliding yoke and tapping gently with a hammer making sure the bearing cap fits smoothly over the spider.
8. Opposite bearing cap into sliding yoke and tapping gently with a hammer until a snap ring can be fitted.
9. One snap ring into sliding yoke.

Inspect

- Snap ring upon installation. Make sure the snap ring is completely seated and firm.

- Using an 18 mm socket in conjunction with a 24 mm socket and soft-jaw vise, place the propeller shaft yoke into the soft-jaw vise with the 18 mm socket acting as a driver and the 24 mm socket acting as a hollow support. Tighten the vise until the opposite bearing cap is pressed into the sliding yoke so that a snap ring can be fitted.

10. One snap ring into sliding yoke.

Inspect

- Snap ring upon installation. Make sure the snap ring is completely seated and firm.

11. Propeller shaft into vehicle. Refer to "Propeller Shaft" under "On-Vehicle Service" earlier in this section.

SPECIFICATIONS

FASTENER TORQUES

Propeller Shaft Bolts and Nuts	50 N·m (37 lb.ft.)
Transfer Case Oil Level/Filler Plug	28 N·m (21 lb.ft.)
Transfer Case Drain Plug	28 N·m (21 lb.ft.)

PROPELLER SHAFT SPECIFICATIONS

Propeller Shaft Runout (Maximum)	0.8 mm (0.031 in.)

SERVICE PARTS INFORMATION

Component Name Used in Section 4A	Reference Name in Service Parts Catalog	Group Number
Front Propeller Shaft	Shaft ASM, Propeller Front	5.544
Rear Propeller Shaft	Shaft ASM, Propeller Rear	5.544
Sliding Yoke	Yoke, Propeller Shaft Sliding	5.548
Pinion Flange Yoke	Yoke, Propeller Shaft Joint Flange	5.545
Universal Joint	Joint ASM, Propeller Shaft Universal	5.548
Propeller Shaft Bolt	Bolt, Propeller Shaft	5.586
Propeller Shaft Nut	Nut, Propeller Shaft	5.586
Snap Ring	Circlip, Propeller Shaft Universal Joint	5.586

SPECIAL TOOLS

1
J 7872

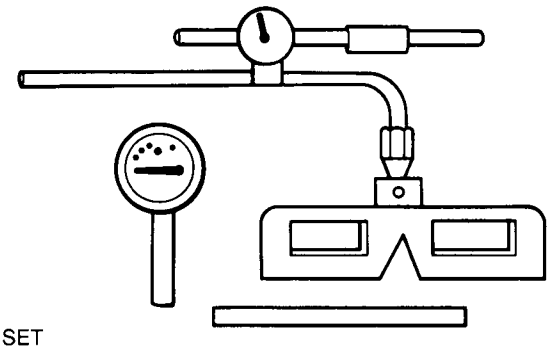

1 MAGNETIC BASE INDICATOR SET

NC4024-4A-JT-RS

SECTION 4B

REAR AXLE

NOTICE: When fasteners are removed, always reinstall them at the same location from which they were removed. If a fastener needs to be replaced, use the correct part number fastener for that application. If the correct part number fastener is not available, a fastener of equal size and strength (or stronger) may be used. Fasteners that are not reused, and those requiring thread-locking compound, will be called out. The correct torque values must be used when installing fasteners that require them. If the above procedures are not followed, parts or system damage could result.

CONTENTS

General Description 4B-2
Rear Axle Assembly 4B-2
Differential Assembly 4B-2
Rear Axle Operation 4B-3
Rear Wheel Antilock Brakes (RWAL) 4B-3
Diagnosis 4B-3
Preliminary Checks 4B-3
Road Test 4B-3
Determining the Type of Noise 4B-3
Road Noise 4B-3
Tire Noise 4B-3
Engine and Transmission Noise 4B-3
Brake Noise 4B-4
Body Boom Noise or Vibration 4B-4
Rear Axle Shaft Bearing Noise 4B-4
Pinion Bearing Noise 4B-4
Side Bearing Noise 4B-4
Side Gear and Pinion Gear Noise 4B-4
Ring and Pinion Gear Noise 4B-4
On-Vehicle Service 4B-6
Checking Rear Axle Oil Level 4B-6
Rear Axle Oil Change Procedure 4B-7
Rear Axle Shaft and Bearing 4B-7
Rear Axle Shaft Inner Oil Seal 4B-11
Differential Carrier 4B-12
Rear Axle Housing 4B-14
Unit Repair 4B-20
Differential Carrier Disassembly 4B-20
Differential Carrier Assembly 4B-25
Setting Pinion Depth 4B-30
Side Bearing Preload and Backlash Adjustment Procedure 4B-36
Specifications 4B-41
Fastener Torques 4B-41
Rear Axle Specifications 4B-41
Oil Capacity (Approximate) 4B-41
Service Parts Information 4B-41
Special Tools 4B-43

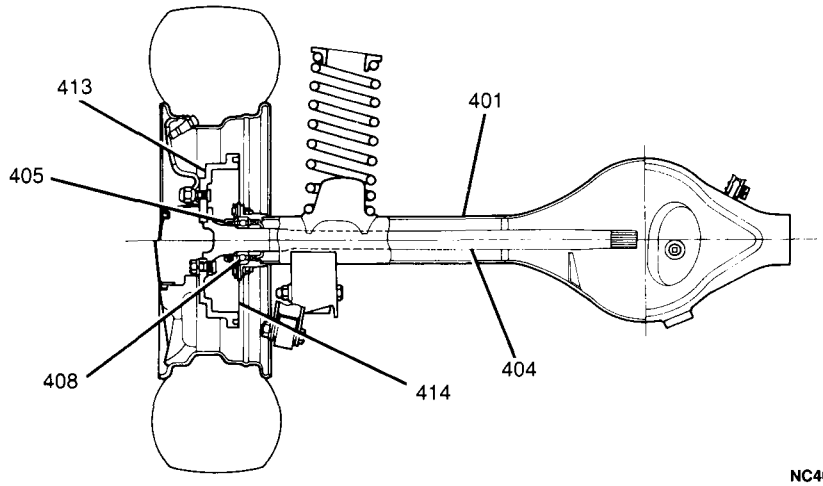

401 REAR AXLE HOUSING
404 REAR AXLE SHAFT
405 REAR AXLE SHAFT BEARING RETAINER
408 REAR AXLE SHAFT BEARING
413 BRAKE DRUM
414 BRAKE BACKING PLATE

Figure 1 Rear Axle

GENERAL DESCRIPTION

REAR AXLE ASSEMBLY

Figure 1

The rear axle assembly contains two rigid axle shafts which transfer engine torque to the the rear wheels. These axle shafts are supported in the rear axle housing by bearings at both outer ends, and driven by the differential assembly which is mounted in the center of the rear axle housing. A propeller shaft turns the differential assembly and transfers power to the rear axle shafts. The rear axle housing is sealed and contains a synthetic gear lubricant which lubricates the differential assembly and axle shafts bearings. The rear axle housing is also vented to prevent excessive heat buildup (Figure 1).

Rear trailing rods connect the rear axle housing to the frame and act as pivot points for the housing as it moves up and down with the rear suspension. Coil springs support the rear of the vehicle and are seated into the frame and rear axle housing axle. Shock absorbers are fitted between the rear axle housing and the frame to help to reduce road vibration and rough pavement. An upper control arm is fitted to the body by bushings, and to the rear differential carrier by a rear control arm ball joint to prevent the rear axle housing from moving in a lateral direction.

DIFFERENTIAL ASSEMBLY

Figure 2

The differential assembly uses a hypoid, beveled ring and pinion gear set. It consists of a ring gear which is mounted to the differential case and a pinion gear which is mounted in the differential carrier. The ring and pinion gears are in constant mesh with each other (Figure 2). A set of six gears are mounted inside the differential case. Two of these gears are known as side gears and the other four are known as differential pinion gears. Each side gear is splined to an axle shaft which causes each axle shaft to turn when its side gear rotates. The differential pinion gears are mounted on a pinion cross shaft and are free to rotate on it. The pinion shaft is fitted into a bore in the differential case and is held in place by a pinion shaft roll pin.

The differential case is mounted in the differential carrier where the pinion gear drives the ring gear, differential case, and the side and differential pinion gears. The differential carrier is mounted near the center of the rear axle housing. For removal and installation procedures, refer to "Rear Differential Carrier" later in this section. For differential carrier overhaul procedures, refer to UNIT REPAIR later in this section.

404 REAR AXLE SHAFT
445 OUTER PINION BEARING
447 INNER PINION BEARING
449 DIFFERENTIAL CARRIER
451 SIDE BEARING CAP
453 COLLAPSIBLE SPACER
454 PINION SELECTIVE SHIM
455 PINION GEAR
456 RING GEAR
459 LEFT DIFFERENTIAL CASE
461 SIDE GEAR
463 SIDE BEARING
466 RIGHT SIDE BEARING ADJUSTER
470 DIFFERENTIAL PINION GEAR
476 PINION CROSS SHAFT (LONG)

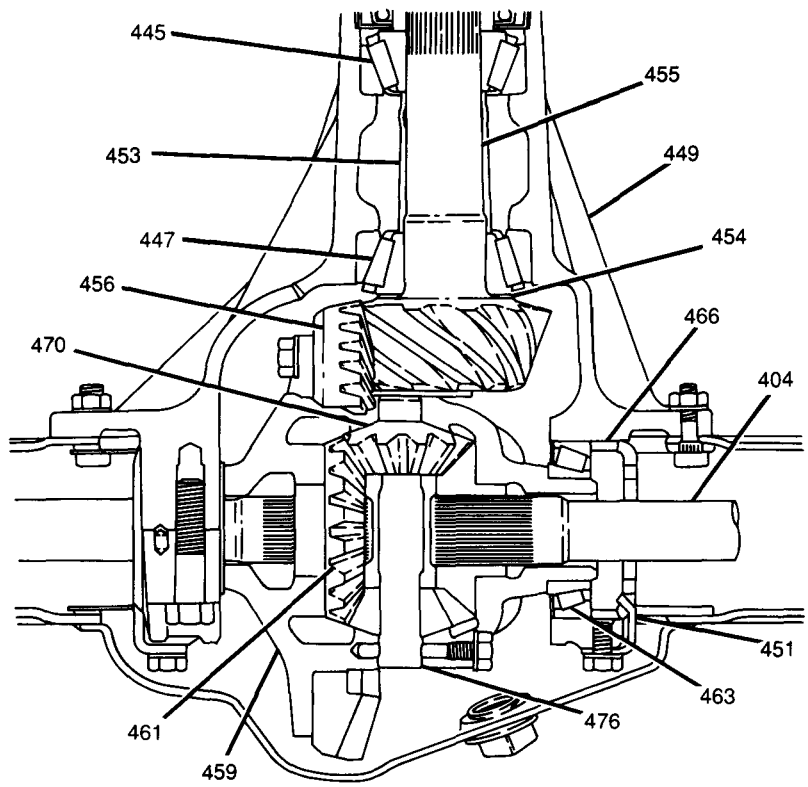

Figure 2 Typical Differential

REAR AXLE OPERATION

Engine torque is provided by a rear propeller shaft that is bolted to the pinion gear by a universal joint and pinion flange. The pinion gear is in constant mesh with the ring gear and causes it to turn. The ring gear then rotates the differential case — causing the differential pinion gears to turn with the case. This causes the side gears and both rear axle shafts to rotate. When both wheels have equal traction, the pinion gears do not rotate on the cross shaft. This is due to an input force that is equally divided between the side gears. In other words, the pinion gears revolve with the cross shaft but do not rotate around it. When the vehicle turns a corner, the outer axle must turn faster than the inner axle. When the inner axle turns slower than the outer, it slows its side gear. The differential pinion gears will roll around the slower side gear providing torque to the outer axle shaft.

REAR WHEEL ANTILOCK BRAKES (RWAL)

Rear wheel antilock brakes are standard equipment on this vehicle. The rear wheel speed sensor is mounted on the rear differential carrier. The rear wheel speed sensor consists of a magnetic core, with a magnet and coil. The exciter ring is mounted on the differential case behind the ring gear and rotates with it. An electrical impulse is produced each time a gear tooth of the exciter ring passes the rear wheel speed sensor allowing it to receive a signal in direct proportion to rear axle speed. This signal is then sent to the electronic brake control module (EBCM). For more information and diagnostic procedures, refer to SECTION 5E3 or SECTION 8A.

DIAGNOSIS

The most essential part of rear axle service, as with any mechanical repair, is proper diagnosis of the problem. In axle work, one of the most difficult areas to diagnose is noise. Any gear driven unit, especially a gear driven axle where engine torque occurs at a 90 degree angle, produces a certain amount of noise. An interpretation should be made for each vehicle to determine whether a noise is normal or if a problem actually exists. One way of determining this is road testing an identical vehicle with the same options under the same conditions. If the same amount of noise is audible at the same speeds and under the same conditions, it may be deemed commercially acceptable since it is unlikely that the exact same problem exists in both vehicles. A normal amount of noise must be expected and cannot be eliminated by conventional repairs or adjustments. However, if a noise proves to be extremely loud or unusual, then it should be investigated. This can be accomplished by a road test and a systematic check of the components associated with the rear axle to isolate the noise.

PRELIMINARY CHECKS

In order to perform an accurate road test, it is important that certain checks be performed to eliminate other possible problems that may point to the rear axle. Make sure to check the following items before performing a road test.

Inspect

1. Tires for correct inflation pressure. Refer to SECTION 3E.
2. Rear axle housing for correct oil level. Refer to "Checking Rear Axle Oil Level" later in this section.
3. Undercarriage for loose attaching rear axle parts which may cause noise. Refer to SECTION 10-3.
4. Rear suspension for any loose or worn components. Refer to SECTION 3D.

ROAD TEST

When road testing a vehicle, a smooth asphalt road surface is preferable because it dampens a high degree of road noise. Road test the vehicle to verify the problem and the speed and/or rpm at which the problem occurs. Once the problem has been verified, duplicate the noise under varying road conditions to eliminate the possibility of road noise. Once the noise and the conditions under which it exists has been verified, the type of noise and its location must be identified.

DETERMINING THE TYPE OF NOISE

Many noises thought to be coming from the rear axle may actually be originating from other sources such as tires, road surfaces, wheel bearings, engine, transmission or body. Because noise is a major factor in determining or diagnosing a rear axle problem, a thorough and careful check should be made to determine the source of the noise before proceeding with rear axle repair.

Road Noise

Some road surfaces such as brick or rough-surfaced concrete, cause noise which may be mistaken for tire or rear axle noise. Driving the vehicle on varying types of road surfaces such as smooth asphalt or dirt will help in determining whether road surface is the cause of the noise. Noise caused by road surface should be the same in drive or coast.

Tire Noise

Tire noise can be easily mistaken for rear axle noise. Because noise can transmit or dissipate through the vehicle body, noise coming from the front tires can also be mistaken for a rear axle noise. Tires showing uneven wear or that are underinflated, are usually noisy and may produce vibrations which can appear at other places on the vehicle. This is particularly true with low tire pressure. For tire inspection procedures, refer to SECTION 3.

Engine and Transmission Noise

The engine or transmission may sometimes produce noises which may be mistaken for rear axle noise. To determine which unit is actually causing the noise, record the speed, rpm and other conditions at which the noise is most pronounced. Then stop the vehicle in a quiet place to avoid interference with other extraneous noises. With the transmission in neutral, slowly run the engine speed up and down to the engine speeds that correspond with the vehicle speed at which the noise was most pronounced. If the noise is produced with the vehicle at a standstill, the problem lies in the engine or transmission and not the rear axle.

Brake Noise

Most noises caused by the front or rear brakes are rotational and occur once every wheel revolution. During a road test, duplicate the conditions under which the noise is most pronounced and gently apply the brakes. If the noise immediately appears or disappears when lightly depressing the brake pedal, the noise may be caused by an out of round brake rotor or drum. For brake diagnosis and repair procedures, refer to SECTION 5.

Body Boom Noise or Vibration

Objectionable "body boom" noise or vibration usually occurs at 90 to 100 km/h (55 to 65 mph) and can be caused by an out of balance propeller shaft. Excessive looseness or wear at the propeller shaft sliding yoke splines may also cause a propeller shaft to be unbalanced. For propeller shaft inspections procedures, refer to SECTION 4A.

If all indications point to a rear axle noise after making a comprehensive check of the vehicle, it is necessary to determine what component in the rear axle is a fault. True rear axle noise generally falls into two categories:

- Bearing noise.
- Gear noise.

Rear Axle Shaft Bearing Noise

A rough rear axle shaft bearing produces a vibration or growl which continues with the vehicle coasting and the transmission in neutral. A brinelled rear axle shaft bearing causes a knock or click approximately every two revolutions of the rear wheel. Since the rear axle shaft bearing rollers do not travel at the same speed as the rear axle shaft, this condition can be diagnosed by supporting the rear axle with a hydraulic floor jack and spinning the rear wheels by hand and listening at the hub for evidence of a rough or brinelled rear axle shaft bearing.

CAUTION: DO NOT operate the vehicle with the rear axle supported by a hydraulic floor jack. Should either one of the wheels touch the ground while operating, serious bodily injury could result.

Pinion Bearing Noise

Pinion bearing failures can be distinguished because they rotate at a higher rate of speed than the differential side bearings or rear axle shaft bearings. Rough or excessively worn pinion bearings produce a continuous low pitched whirring or scraping noise on low speed acceleration from a stop.

Side Bearing Noise

Side bearings produce a constant rough noise at a lower pitch than with pinion bearing noise. Side bearing noise may also fluctuate with rear axle bearing noise.

Side Gear and Pinion Gear Noise

Side gears and differential pinion gears rarely cause noise. This is due mainly to their lack of movement during straight ahead driving. Noise produced by these gears will be most pronounced on turns.

Ring and Pinion Gear Noise

There are two basic types of gear noise. One type is produced by broken, bent, overheated, or forcibly damaged gear teeth. This noise is usually quite audible through all speed ranges and can be easily diagnosed upon visual inspection. This type of damage generally results from the following:

- Insufficient lubricant.
- Improper or contaminated lubricant.
- Insufficient gear backlash.
- Improper pinion depth.
- Improper ring and pinion gear alignment.
- Improper pinion bearing preload.

Any damage will progressively lead to complete erosion of the gear teeth and eventually, a fracture will result if the initial damaging condition is not corrected.

Another common cause of hypoid gear tooth fracturing is extended overloading or shock loading — causing the differential pinion gears and cross shaft to seize. This can result from lubrication breakdown caused by excessive wheel spin. The second type of gear noise pertains to the contact pattern of the ring and pinion gear teeth. This form of abnormal gear noise can be recognized because it produces a cycling pitch (whine) and will be very pronounced at the speed range in which it occurs. This noise may occur under one or all of the following conditions:

"Drive" — is under acceleration or heavy pull. The pinion gear riding on the drive side of the ring gear.

"Float" — is only enough throttle to keep the engine from pulling the vehicle (between "Drive" and "Coast"). The vehicle slows down gradually with the engine pulling only slightly.

"Coast" — is with the throttle closed and vehicle in gear. The pinion gear riding on the coast side of the ring gear.

Gear noise tends to peak at a narrow speed range or ranges and tends to remain constant in pitch. Bearing noise will vary in pitch and vehicle speeds. For further diagnosis, refer to the "Rear Axle Noise Diagnosis Charts" (Figures 3 and 4).

CONDITION	INSPECT COMPONENT	FOR POSSIBLE CAUSE
GROANING NOISE IN FORWARD OR REVERSE	REAR AXLE LUBRICANT	LOW LUBRICANT LEVEL CONTAMINATION
NOISE CHANGES ON A DIFFERENT TYPE OF ROAD	WHEELS AND TIRES	IMBALANCE OR IMPROPER INFLATION
NOISE TONE IS LOWERED WITH VEHICLE SPEED	WHEELS AND TIRES	IMBALANCE OR IMPROPER INFLATION
CLUNK OR KNOCK ON ROUGH ROAD OPERATION	REAR AXLE SHAFTS	EXCESSIVE END PLAY
CLUNK NOISE ON ACCELERATION OR DECELERATION	PINION SHAFT OR PINION BEARINGS	WEAR OR DAMAGE
	DIFFERENTIAL CASE SIDE GEAR HUB	WORN, OVERSIZED OR DAMAGED
	UNIVERSAL JOINTS	WEAR OR DAMAGE
CONTINUOUS LOW-PITCHED WHIRRING OR SCRAPING NOISE AT LOW SPEED	PINION BEARINGS	WEAR OR DAMAGE
KNOCK OR CLICK EVERY TWO REVOLUTIONS OF REAR WHEELS	REAR AXLE SHAFT BEARINGS	LOW LUBRICANT LEVEL WEAR OR DAMAGE
NOISE MOST PRONOUNCED ON TURNS	DIFFERENTIAL SIDE GEARS AND PINION GEARS	WEAR OR DAMAGE EXCESSIVE BACKLASH
NOISE IS THE SAME IN DRIVE OR COAST	WHEELS AND TIRES	IMBALANCE OR IMPROPER INFLATION

NC4003-4B-JT-RS

Figure 3 Rear Axle Noise Diagnosis Chart – 1 of 2

CONDITION	INSPECT COMPONENT	FOR POSSIBLE CAUSE
NOISE IS IN DRIVE OR COAST (CONT.)	FRONT WHEEL BEARINGS	WEAR OR DAMAGE
	PROPELLER SHAFT	EXCESSIVE DRIVE LINE ANGLE
DRIVE NOISE, COAST NOISE OR FLOAT NOISE	RING AND PINION GEARS	INCORRECT BACKLASH
		INCORRECT PINION DEPTH
		WEAR OR DAMAGE

NC4004-4B-JT-RS

Figure 4 Rear Axle Noise Diagnosis Chart – 2 of 2

ON-VEHICLE SERVICE

CHECKING REAR AXLE OIL LEVEL

Figure 5

1. Raise and suitably support vehicle. Refer to SECTION 0A.
2. Rear axle housing oil level/filler plug from rear axle housing (Figure 5).

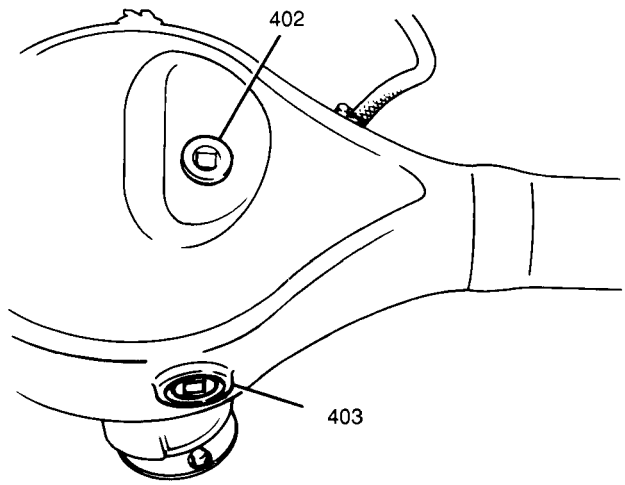

402 REAR AXLE HOUSING OIL LEVEL/FILLER PLUG

403 REAR AXLE HOUSING DRAIN PLUG

NC4005-4B-JT-RS

Figure 5 Rear Axle Housing Oil Level/Filler Plug

Inspect

- Rear axle oil level. Oil level should be even with the bottom of the rear axle housing oil level/filler plug hole. If oil level is low and no oil leaks exist, adjust oil level using synthetic 75W-90 GL4 lubricant GM P/N 12345871, or equivalent.

3. Install rear axle housing oil level/filler plug into rear axle housing (Figure 5).

Tighten

- Rear axle housing oil level/filler plug to 50 N·m (37 lb.ft.).

4. Lower vehicle.

REAR AXLE OIL CHANGE PROCEDURE

Figure 5

1. Raise and suitably support vehicle. Refer to SECTION 0A.
2. Place a drain pan or suitable container under rear axle housing.
3. Remove rear axle housing oil level/filler plug from rear axle housing (Figure 5).
4. Remove rear axle housing drain plug from rear axle housing and drain rear axle housing (Figure 5).

- Apply Loctite® pipe sealant GM P/N 1052080, or equivalent, to the threaded portion of the rear axle housing drain plug.

5. Install rear axle housing drain plug into rear axle housing after rear axle housing has completely drained (Figure 5).

Tighten

- Rear axle housing drain plug to 25 N·m (18 lb.ft.).

6. Refill the rear axle housing with approximately 2.2 liters (4.6 pts.) of synthetic 75W-90 GL4 lubricant GM P/N 12345871, or equivalent. Oil level should be even with the bottom of the rear axle housing oil level/filler plug hole.
7. Install rear axle housing oil level/filler plug into rear axle housing (Figure 5).

Tighten

- Rear axle housing oil level/filler plug to 50 N·m (37 lb.ft.).

8. Remove drain pan from under rear axle housing.
9. Lower vehicle.

REAR AXLE SHAFT AND BEARING

Figures 5 through 17

Remove or Disconnect

Tools Required:
J 37781 Rear Axle Shaft and Brake Drum Remover
J 2619-01 Slide Hammer
J 22912-01 Rear Bearing Remover

- Raise and suitably support vehicle. Refer to SECTION 0A.
- Place a drain pan or suitable container under rear axle housing.

1. Rear axle housing oil level/filler plug from rear axle housing (Figure 5).
2. Rear axle housing drain plug from rear axle housing and drain rear axle housing (Figure 5).
3. Rear tire and wheel assembly. Refer to SECTION 3E.
4. Rear brake drum from rear axle. Refer to SECTION 5.
5. Rear antilock brake shoe return spring from both rear brake shoes (Figure 6).

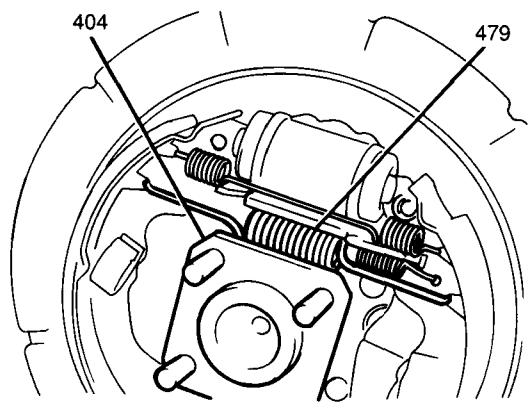

404 REAR AXLE SHAFT
479 REAR ANTILOCK BRAKE SHOE RETURN SPRING
NC4006-4B-JT-RS

Figure 6 Rear Antilock Brake Shoe Return Spring

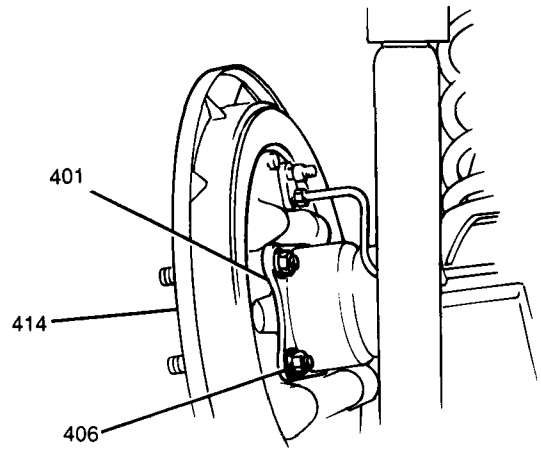

401 REAR AXLE HOUSING
406 REAR AXLE SHAFT RETAINING NUTS
414 BRAKE BACKING PLATE
NC4007-4B-JT-RS

Figure 7 Removing Rear Axle Shaft Retaining Nuts

6. Four rear axle shaft retaining nuts from rear axle shaft bearing retainer studs behind brake backing plate (Figure 7).

Important

- DO NOT remove the brake backing plate with the rear axle shaft. If this precaution is not observed, inner seal damage may result.

7. Rear axle shaft and bearing from rear axle housing using a J 37781 with a J 2619-01 (Figure 8).

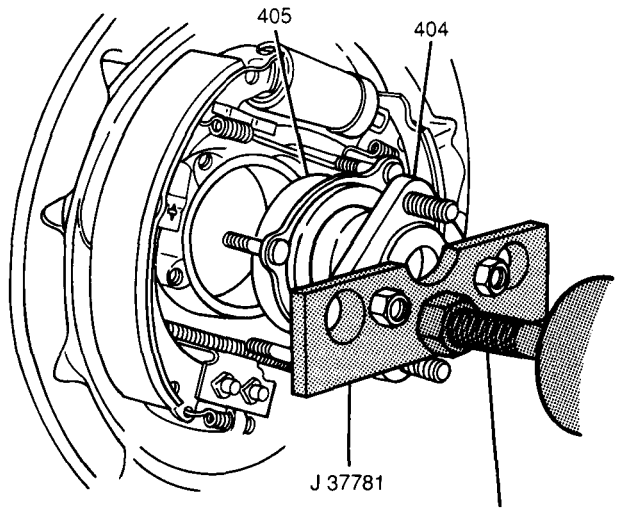

404 REAR AXLE SHAFT
405 REAR AXLE SHAFT BEARING RETAINER
NC4008-4B-JT-RS

Figure 8 Removing Rear Axle Shaft

Important

- Right and left rear axle shafts are different lengths. The right rear axle shaft is 722.5 mm (28.4-inches) in length. The left rear axle shaft is 679.5 mm (26.8-inches) in length. When removing both axle shafts, make sure they are installed in their respective sides of the rear axle housing.

Measure

- Rear axle shaft length. Length should be measured from the differential end of the shaft to the outside edge of the axle shaft flange (Figure 9).

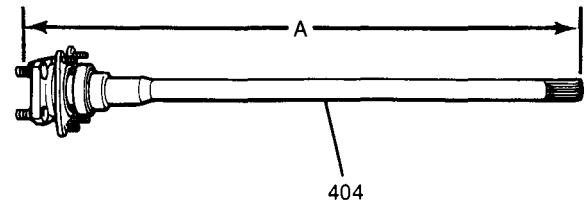

A AXLE SHAFT LENGTH – FROM END OF FLANGE TO END OF SHAFT
404 REAR AXLE SHAFT
NC4009-4B-JT-RS

Figure 9 Rear Axle Shaft Lengths

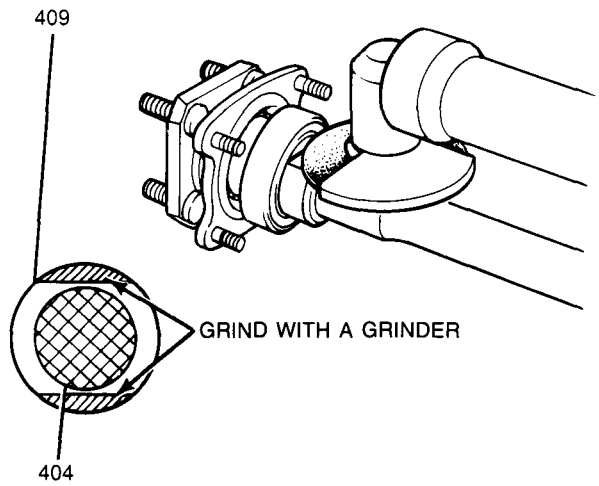

404 REAR AXLE SHAFT
409 REAR AXLE SHAFT BEARING RETAINING RING
NC4010-4B-JT-RS

Figure 10 Grinding Rear Axle Shaft Bearing Retainer Ring

- Using a hand grinder, flatten two opposite sides of the rear axle shaft bearing retainer ring (Figure 10).

  NOTICE: Use caution not to grind on the axle shaft itself. If the axle shaft is damaged by grinding, the shaft may become weak or unbalanced causing vibration, bearing or seal failure.

8. Rear axle shaft bearing retainer ring on axle shaft using a hammer and cold chisel (Figure 11).

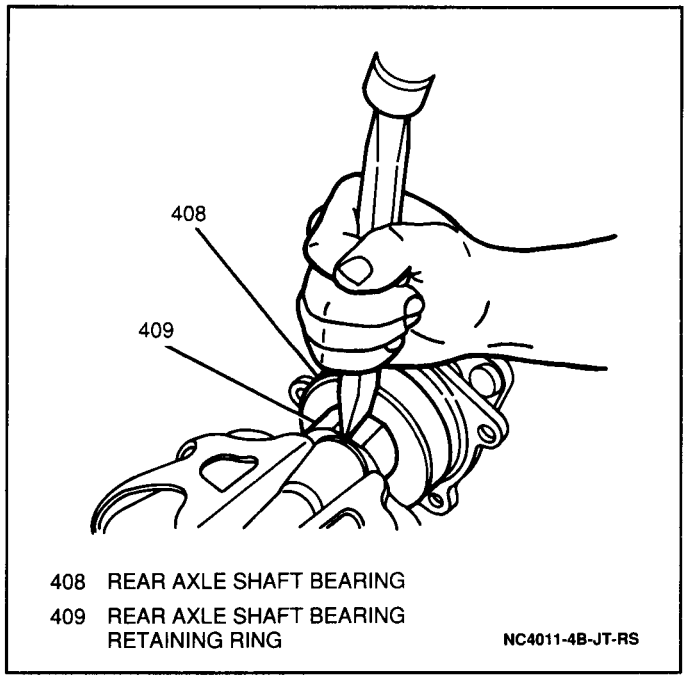

Figure 11 Removing Rear Axle Shaft Bearing Retainer Ring

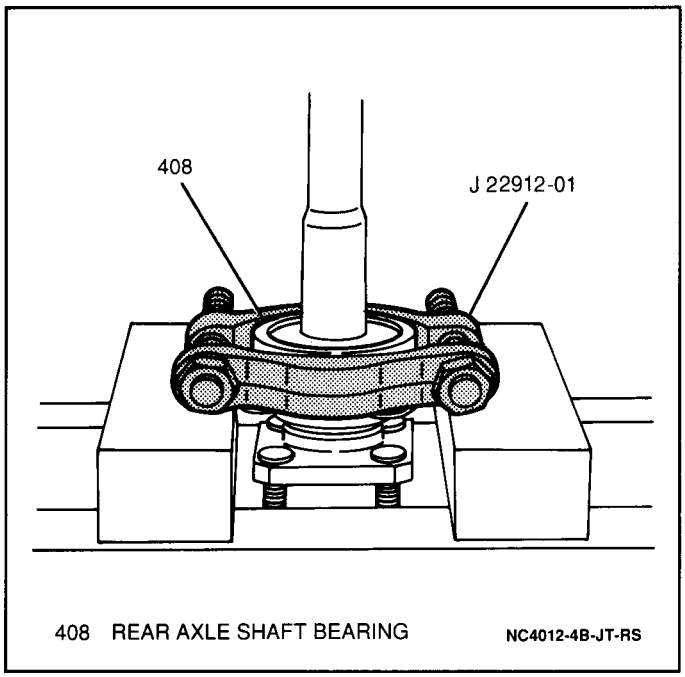

Figure 12 Removing Rear Axle Shaft Bearing

9. Rear axle shaft bearing from rear axle shaft using a J 22912-01 and a hydraulic press. Place the J 22912-01 on the rear axle shaft between the rear axle shaft bearing and the rear axle shaft bearing retainer. Then place the rear axle shaft in a hydraulic press and slowly press the rear axle shaft bearing off the rear axle shaft (Figure 12).
10. Rear axle shaft bearing retainer from rear axle shaft.
11. Rear axle shaft outer oil seal from the rear axle shaft bearing retainer (Figure 13).

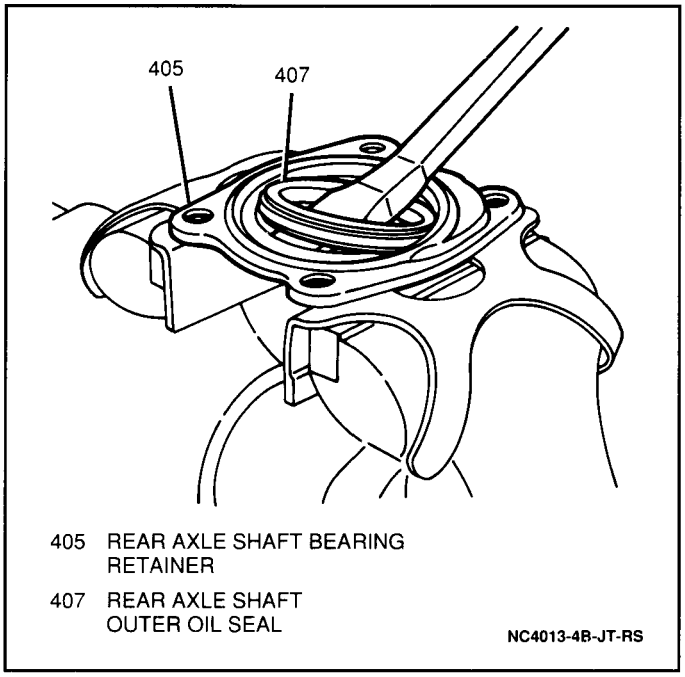

Figure 13 Removing Rear Axle Shaft Outer Oil Seal

Inspect

1. Rear axle shaft bearing for brinelling or roughness. Replace as necessary.
2. Rear axle shaft for flat spots or blue discoloration indicating overheating. Replace as necessary.

Install or Connect

Tools Required:
J 37771 Rear Axle Bearing Retainer Seal Installer
J 22912-01 Rear Bearing Remover

- Apply wheel bearing lubricant GM P/N 1051344, or equivalent, to the inner surface of the new rear axle shaft outer oil seal.

1. Rear axle shaft outer oil seal into the rear axle shaft bearing retainer using a J 37771 (Figure 14).

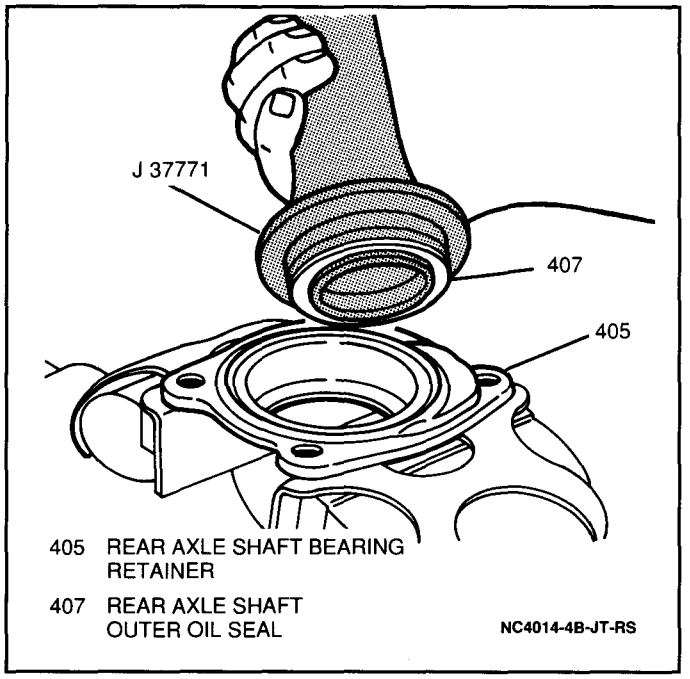

Figure 14 Installing Rear Axle Shaft Outer Oil Seal

2. Rear axle shaft bearing retainer onto the rear axle shaft.
3. Rear axle shaft bearing onto the rear axle shaft using the J 22912-01 and a hydraulic press. With the concave side facing away from the rear axle shaft bearing, place the J 22912-01 on the rear axle shaft below the rear axle shaft bearing. Then place the rear axle shaft in a hydraulic press and slowly press the rear axle shaft bearing to its original position behind the rear axle shaft bearing retainer (Figure 15).

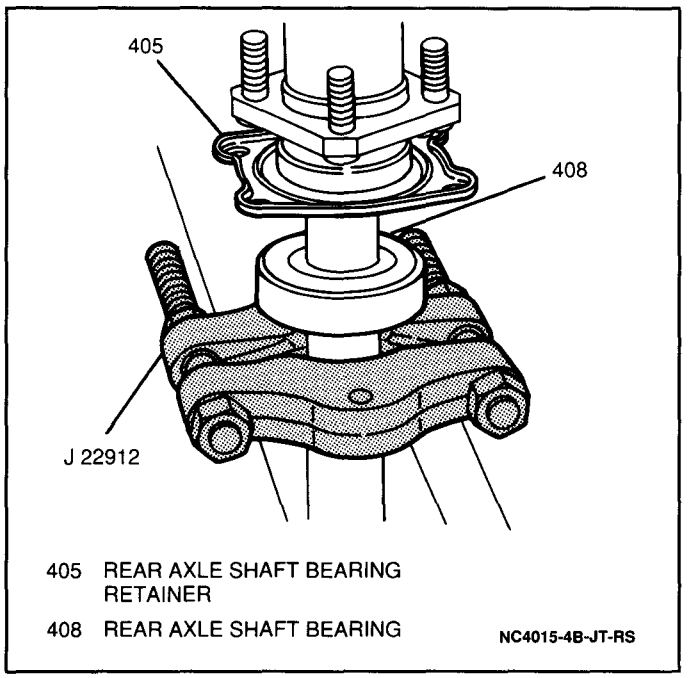

Figure 15 Installing Rear Axle Shaft Bearing

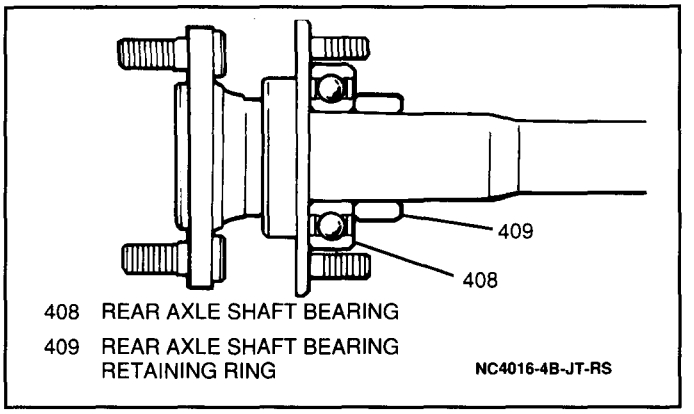

Figure 16 Rear Axle Shaft Bearing Retainer Ring Position

4. Rear axle shaft bearing retainer ring onto the rear axle shaft using a J 22912-01 and a hydraulic press. With the concave side facing away from the rear axle shaft bearing retainer ring, place the J 22912-01 on the rear axle shaft below the rear axle shaft bearing retainer ring. Then place the rear axle shaft in a hydraulic press and slowly press the rear axle shaft bearing retainer ring past the shaft taper to its original position behind the rear axle shaft bearing (Figure 16).

Inspect

- Rear axle shaft inner oil seal for cuts or other damage. Replace as necessary. Refer to "Rear Axle Shaft Inner Oil Seal" later in this section.

- Apply wheel bearing lubricant GM P/N 1051344, or equivalent, to the rear axle inner oil seal lip in the rear axle housing.
- Apply wheel bearing lubricant GM P/N 1051344, or equivalent, to the rear axle shaft bearing retainer ring mating surface on the brake backing plate.

5. Rear axle shaft and bearing into the rear axle housing making sure the rear axle shaft bearing is firmly seated into the rear axle housing (Figure 17).

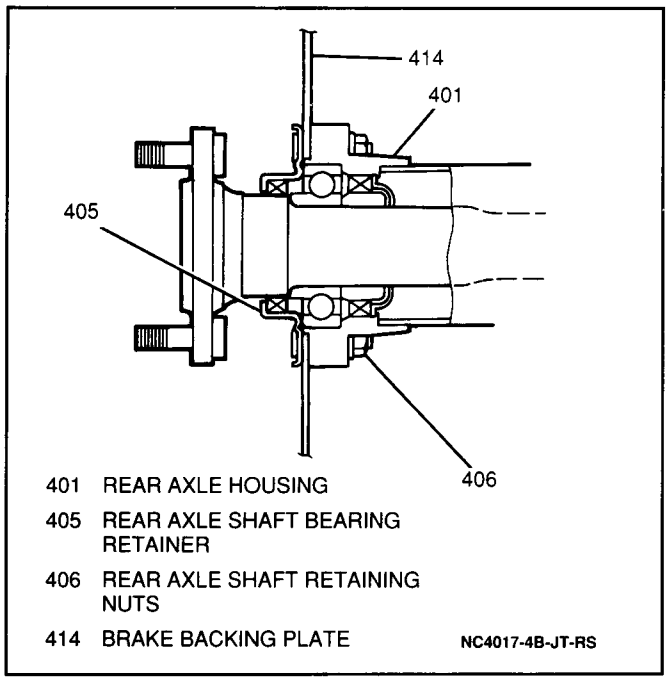

Figure 17 Rear Axle Shaft Installation

6. Four rear axle shaft retaining nuts to rear axle shaft retainer studs behind brake backing plate (Figure 17).

Tighten

- Rear axle shaft retaining nuts to 23 N·m (17 lb.ft.).

7. Rear antilock brake shoe return spring to both rear brake shoes (Figure 6).
8. Rear brake drum to rear axle. Refer to SECTION 5.
9. Rear tire and wheel assembly. Refer to SECTION 3E.

- Apply Loctite® pipe sealant GM P/N 1052080, or equivalent, to the threaded portion of the rear axle housing drain plug.

10. Rear axle housing drain plug into rear axle housing (Figure 5).

Tighten

- Rear axle housing drain plug to 25 N·m (18 lb.ft.).

- Refill the rear axle housing with approximately 2.2 liters (4.6 pts.) of synthetic 75W-90 GL4 lubricant GM P/N 12345871, or equivalent. Oil level should be even with the bottom of the rear axle housing oil level/filler plug hole.

11. Rear axle housing oil level/filler plug into rear axle (Figure 5).

Tighten

- Rear axle housing oil level/filler plug to 50 N·m (37 lb.ft.).

- Remove drain pan from under rear axle housing.
- Lower vehicle.

REAR AXLE SHAFT INNER OIL SEAL

Figures 5, 18 and 19

Remove or Disconnect

Tools Required:
J 26941 Axle Shaft Seal Remover
J 23907 Slide Hammer

- Raise and suitably support vehicle. Refer to SECTION 0A.
- Place a drain pan or suitable container under rear axle housing.

1. Rear axle housing oil level/filler plug from rear axle housing (Figure 5).
2. Rear axle housing drain plug from rear axle housing and drain rear axle housing (Figure 5).
3. Rear tire and wheel assembly. Refer to SECTION 3E.
4. Rear brake drum from rear axle. Refer to SECTION 5C.
5. Rear axle shaft from rear axle housing. Refer to "Rear Axle Shaft and Bearing" earlier in this section.
6. Rear axle shaft inner oil seal from rear axle housing using a J 26941 with a J 23907 (Figure 18).

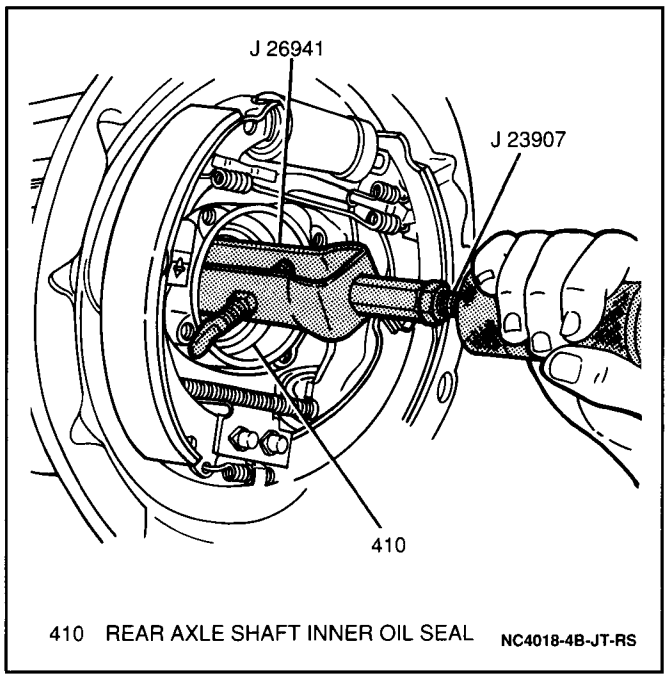

Figure 18 Removing Rear Axle Shaft Inner Oil Seal

Inspect

- Rear axle inner oil seal protector for damage. Replace as necessary.

Install or Connect

Tools Required:
J 29039 Axle Shaft Inner Oil Seal Installer
J 8092 Driver Handle

1. New rear axle shaft inner oil seal into rear axle housing using a J 29039 and a J 8092 (Figure 19).

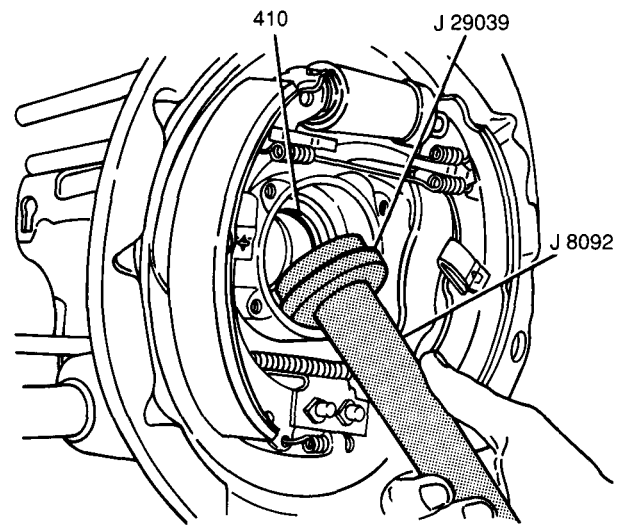

410 REAR AXLE SHAFT INNER OIL SEAL NC4019-4B-JT-RS

Figure 19 Installing Rear Axle Shaft Inner Oil Seal

- Apply wheel bearing lubricant GM P/N 1051344, or equivalent, to the new rear axle shaft inner oil seal lip.

2. Rear axle shaft into rear axle housing. Refer to "Rear Axle Shaft and Bearing" earlier in this section.
3. Rear brake drum to rear axle. Refer SECTION 5C.
4. Rear tire and wheel assembly. Refer to SECTION 3E.

- Apply Loctite® pipe sealant GM P/N 1052080, or equivalent, to the threaded portion of the rear axle housing drain plug.

5. Rear axle housing drain plug into rear axle housing (Figure 5).

Tighten

- Rear axle housing drain plug to 25 N·m (18 lb.ft.).

- Refill the rear axle housing with approximately 2.2 liters (4.6 pts.) of synthetic 75W-90 GL4 lubricant GM P/N 12345871, or equivalent. Oil level should be even with the bottom of the rear axle housing oil level/filler plug hole.

6. Rear axle housing oil level/filler plug into rear axle housing (Figure 5).

Tighten

- Rear axle housing oil level/filler plug to 50 N·m (36 lb.ft.).

- Remove drain pan from under rear axle housing.
- Lower vehicle.

DIFFERENTIAL CARRIER

Figures 5 and 20 through 25

Remove or Disconnect

- Raise and suitably support vehicle. Refer to SECTION 0A.
- Place a drain pan or suitable container under rear axle housing.

1. Rear axle housing oil level/filler plug from rear axle housing (Figure 5).
2. Rear axle housing drain plug from rear axle housing and drain rear axle housing (Figure 5).
3. Rear tire and wheel assemblies. Refer to SECTION 3E.
4. Rear brake drums from rear axle. Refer SECTION 5C.
5. Both rear axle shafts from rear axle housing. Refer to "Rear Axle Shaft and Bearing" earlier in this section.

Important

- To ensure rear propeller shaft balance, an index mark (reference mark) must be placed on the differential pinion flange and the rear propeller shaft flange so that the rear propeller shaft can be installed in the same position from which it was removed (Figure 20). If this procedure is not followed, a driveline imbalance may result causing vibration, premature component wear or other undesirable characteristics.

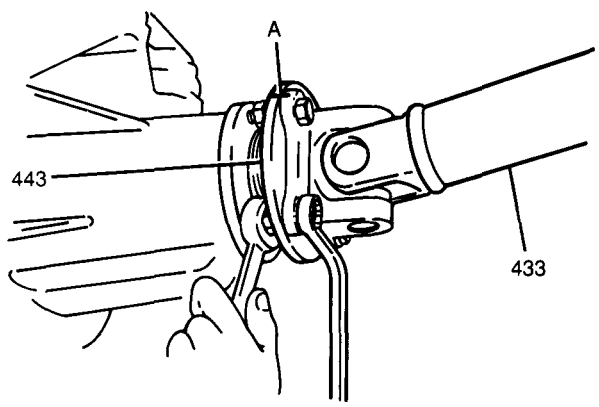

A REFERENCE MARK
433 REAR PROPELLER SHAFT
443 PINION FLANGE NC4020-4B-JT-RS

Figure 20 Removing Rear Propeller Shaft

6. Four bolts, four nuts and rear propeller shaft from vehicle (Figure 20).

- Loosen both rear control arm through bolts and nuts.

7. Four bolts from rear control arm ball joint boss and and separate rear control arm ball joint boss from differential carrier (Figure 21).

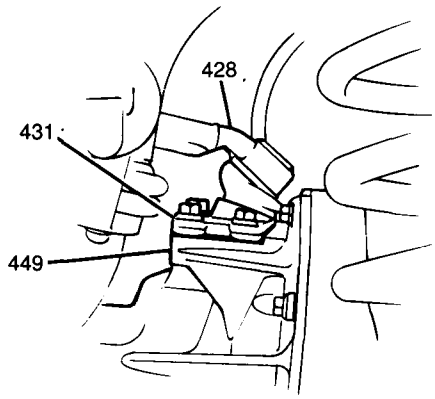

428 REAR CONTROL ARM
431 REAR CONTROL ARM BALL JOINT BOSS BOLTS
449 DIFFERENTIAL CARRIER
NC4021-4B-JT-RS

Figure 21 Removing Rear Control Arm Joint Boss Bolts

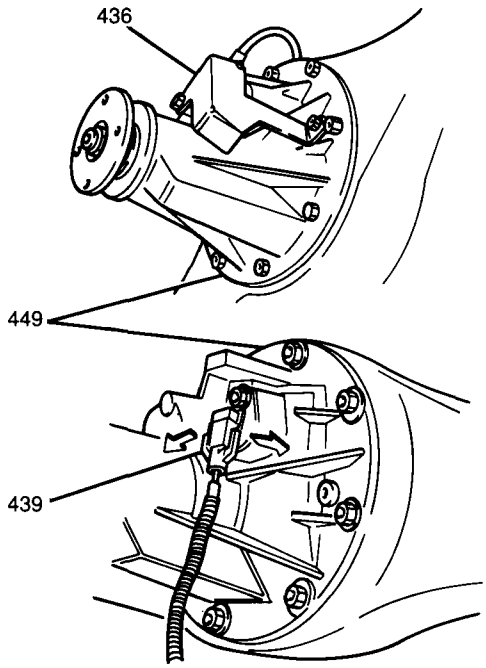

436 REAR WHEEL SPEED SENSOR COVER
439 REAR WHEEL SPEED SENSOR ELECTRICAL CONNECTOR
449 DIFFERENTIAL CARRIER
NC4022-4B-JT-RS

Figure 22 Disconnecting Rear Wheel Speed Sensor

8. Two bolts and rear wheel speed sensor cover from differential carrier (Figure 22).
9. Electrical connector from rear wheel speed sensor (Figure 22).
10. Eight nuts and differential carrier from rear axle housing (Figure 23).

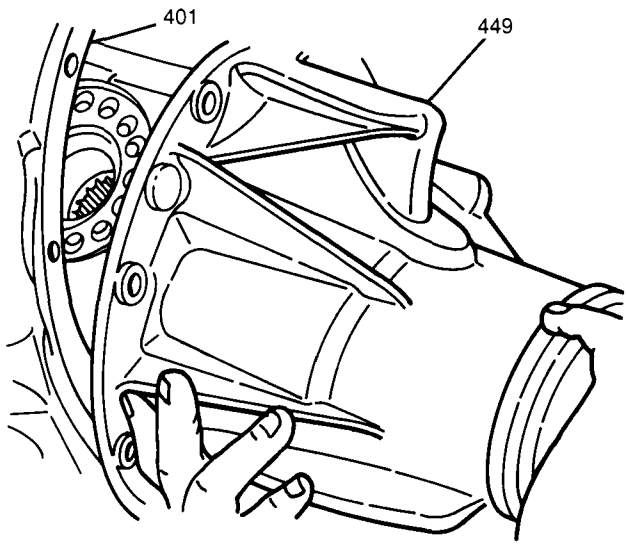

401 REAR AXLE HOUSING
449 DIFFERENTIAL CARRIER
NC4023-4B-JT-RS

Figure 23 Removing Differential Carrier

Clean

- Oil and sealant from differential carrier and rear axle housing mating surfaces.

Inspect

- For disassembly and inspection procedures, refer to "UNIT REPAIR" later in this section.

Install or Connect

- Apply RTV silicone sealer GM P/N 1052917, or equivalent, to the differential carrier mating surface on the rear axle housing.

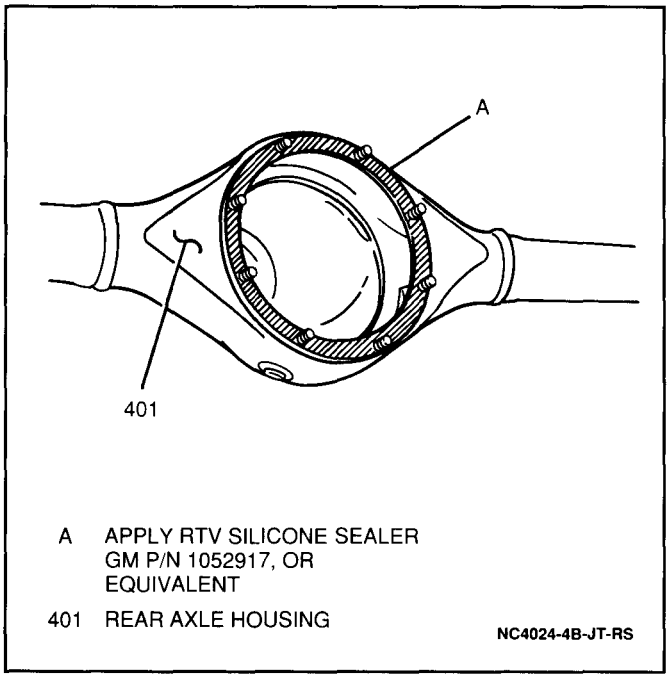

Figure 24 Sealer Application

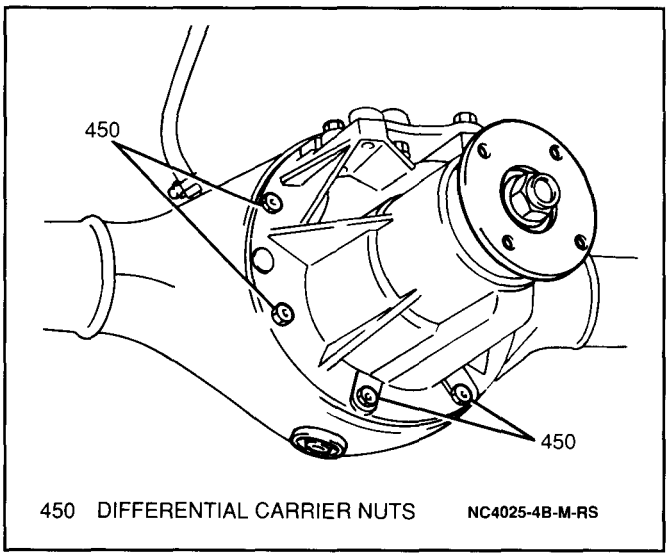

Figure 25 Differential Carrier Nuts

1. Differential carrier into rear axle housing; secure with eight nuts (Figure 25).

Tighten

- Differential carrier nuts to 55 N·m (41 lb.ft.).

2. Electrical connector to rear wheel speed sensor (Figure 22).
3. Rear wheel speed sensor cover to differential carrier; secure with two bolts (Figure 22).

Tighten

- Rear wheel speed sensor cover bolts to 15 N·m (11 lb.ft.).

4. Rear control arm ball joint boss to differential carrier; secure with four bolts (Figure 21).

Tighten

- Rear control arm ball joint boss bolts to 50 N·m (36 lb.ft.).
- Rear control arm through bolts and nuts to 90 N·m (66 lb.ft.).

Important

- Use the index (reference) marks made in the removal procedure to ensure correct rear propeller shaft installation.

5. Rear propeller shaft into vehicle; secure with four nuts and bolts (Figure 20).

Tighten

- Rear propeller shaft nuts and bolts to 50 N·m (36 lb.ft.).

6. Both rear axle shafts into rear axle housing. Refer to "Rear Axle Shaft and Bearing" earlier in this section.
7. Rear brake drums to rear axle. Refer to SECTION 5C.
8. Rear tire and wheel assemblies. Refer to SECTION 3E.

- Apply Loctite® pipe sealant GM P/N 1052080, or equivalent, to the threaded portion of the rear axle housing drain plug.

9. Rear axle housing drain plug into rear axle housing (Figure 5).

Tighten

- Rear axle housing drain plug to 25 N·m (18 lb.ft.).

- Refill the rear axle housing with approximately 2.2 liters (4.6 pts.) of synthetic 75W-90 GL4 lubricant GM P/N 12345871, or equivalent. Oil level should be even with the bottom of the rear axle housing oil level/filler plug hole.

10. Rear axle housing oil level/filler plug into the rear axle housing (Figure 5).

Tighten

- Rear axle housing oil level/filler plug to 50 N·m (36 lb.ft.).

- Remove drain pan from under rear axle housing.
- Lower vehicle.

REAR AXLE HOUSING

Figures 5 and 8 through 34

Remove or Disconnect

Tools Required:
J 26941 Axle Shaft Seal Remover
J 23907 Slide Hammer

- Raise and suitably support vehicle. Refer to SECTION 0A.
- Place a drain pan or suitable container under rear axle housing.

1. Rear axle housing oil level/filler plug from rear axle housing (Figure 50).
2. Rear axle housing drain plug from rear axle housing and drain rear axle housing (Figure 5).

3. Rear tire and wheel assemblies. Refer to SECTION 3E.
4. Rear brake drums from rear axle. Refer to SECTION 5C.
5. Both rear axle shafts from rear axle housing. Refer to "Rear Axle Shaft and Bearing" earlier in this section.
6. Both rear axle shaft inner oil seals from rear axle housing using a J 26941 with a J 23907 (Figure 18).
7. Both rear axle shaft inner oil seal protectors from rear axle housing.

Important

- To ensure rear propeller shaft balance, an index mark (reference mark) must be placed on the differential pinion flange and the rear propeller shaft flange so that the rear propeller shaft can be installed in the same position from which it was removed. If this procedure is not followed, a driveline imbalance may result causing vibration, premature component wear or other undesirable characteristics.

8. Four bolts, four nuts and rear propeller shaft from vehicle (Figure 20).

- Loosen both rear control arm through bolts and nuts (Figure 26).

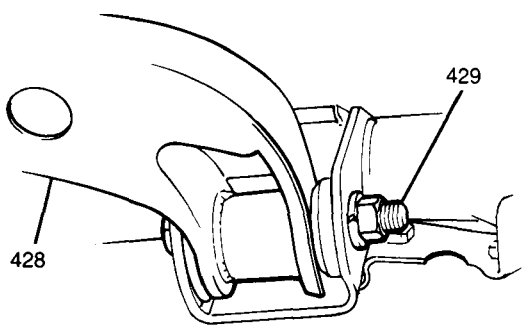

428 REAR CONTROL ARM
429 REAR CONTROL ARM THROUGH BOLT AND NUT
NC4026-4B-JT-RS

Figure 26 Rear Control Arm Nut and Bolt

- Remove drain pan from under rear axle housing.
- Lower vehicle so that the rear axle housing may be supported with a hydraulic jack.
- Support rear axle housing with a suitable hydraulic floor jack (Figure 27).

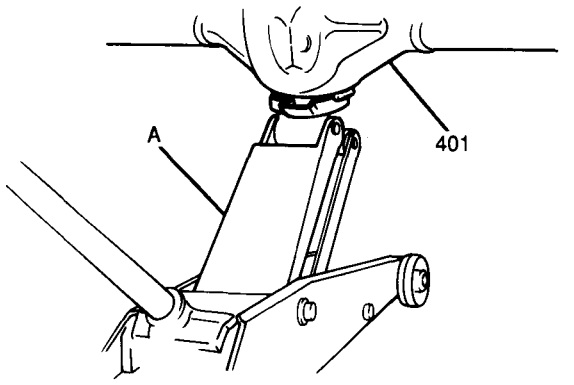

A HYDRAULIC FLOOR JACK
401 REAR AXLE HOUSING
NC4027-4B-JT-RS

Figure 27 Supporting Rear Axle Housing

9. Four bolts at rear control arm ball joint boss and separate rear control arm ball joint boss from differential carrier (Figure 21).
10. Two bolts and rear wheel speed sensor cover from differential carrier (Figure 22).
11. Electrical connector from the rear wheel speed sensor (Figure 22).
12. Eight differential carrier nuts and differential carrier from rear axle housing (Figure 23).

13. Rear brake fluid pipes from rear wheel cylinders and separate both brake backing plates from rear axle housing (Figure 28).

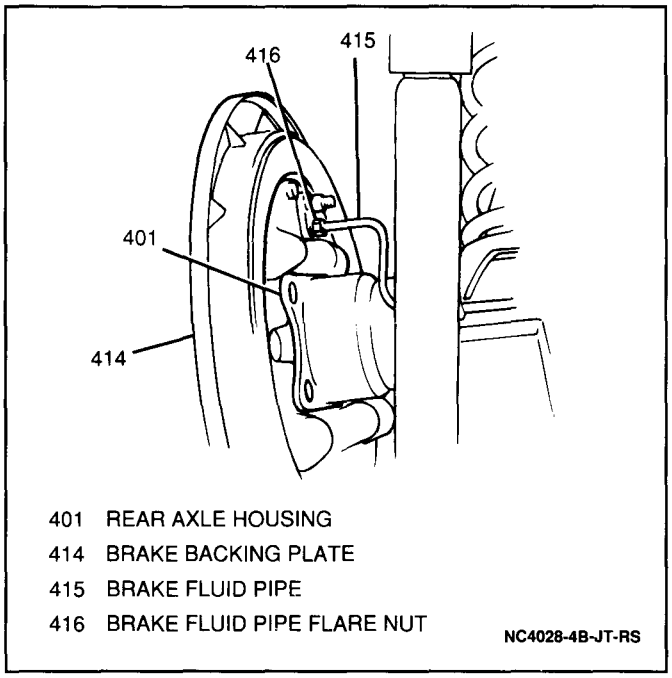

Figure 28 Rear Brake Fluid Pipe and Backing Plate

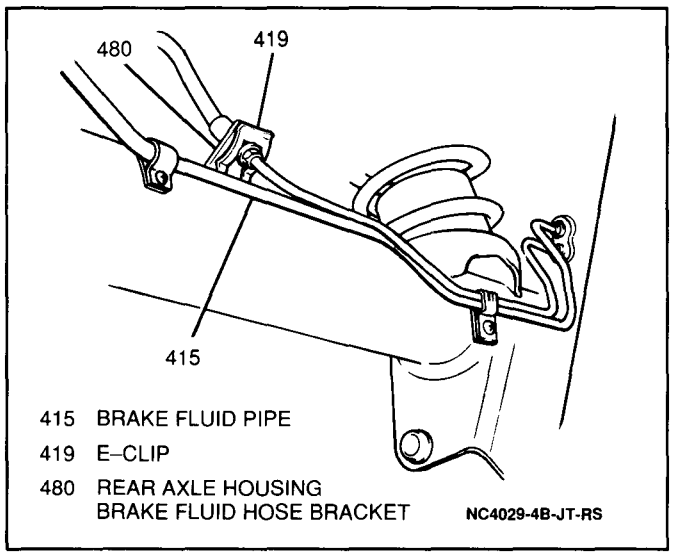

Figure 29 E-Clip and Brake Fluid Pipe Clamp Screws

14. One E-clip and brake fluid hose from rear axle housing brake fluid hose bracket (Figure 29).
15. Five screws from brake fluid pipe clamps and separate brake fluid pipes from rear axle housing (Figures 29 and 30).

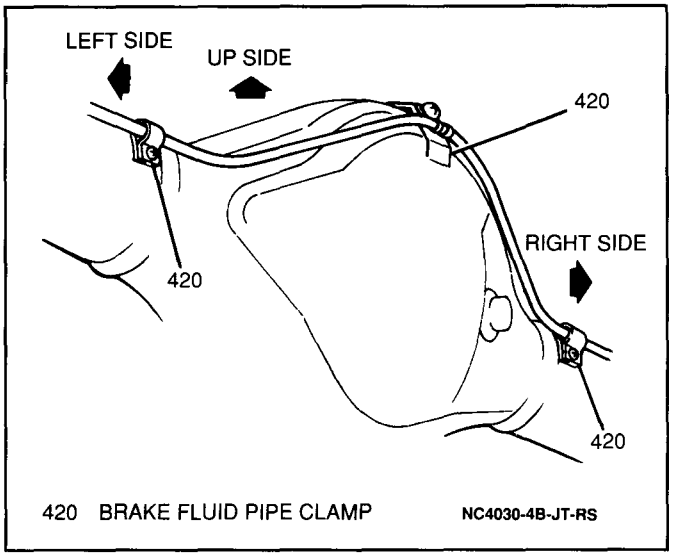

Figure 30 Brake Fluid Pipe Clamp Screws

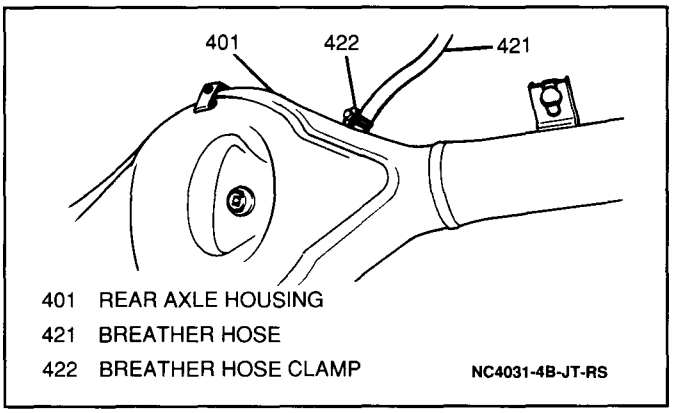

Figure 31 Rear Axle Housing Breather Hose and Clamp

16. One clamp and rear axle housing breather hose from rear axle housing (Figure 31).

17. Two nuts and two washers (one from each side) from lower rear shock absorber through bolts at rear axle housing (Figure 32).

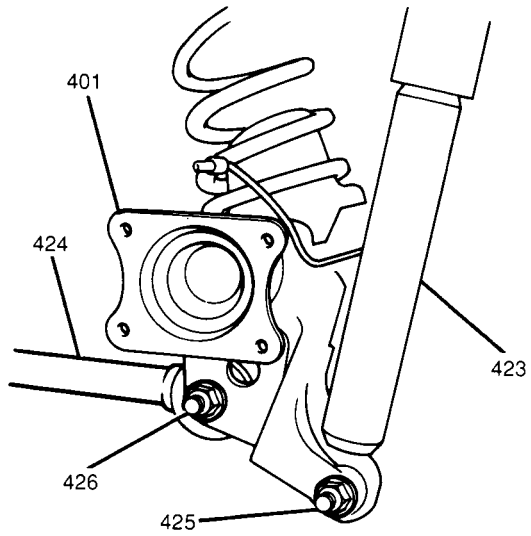

412 REAR AXLE HOUSING BRAKE BACKING PLATE FLANGE
423 REAR SHOCK ABSORBER
424 REAR TRAILING ROD
425 REAR SHOCK ABSORBER THROUGH BOLT AND NUT
426 REAR TRAILING ROD THROUGH BOLT AND NUT

NC4032-4B-JT-RS

Figure 32 Rear Shock Absorber and Rear Trailing Rod Through Bolts and Nuts

18. Two nuts and two washers (one from each side) from rear trailing rods at rear axle housing (Figure 32).

CAUTION: Rear coil springs are under pressure. Lower hydraulic floor jack under rear axle housing slowly until coil spring pressure is relieved. If rear coil springs become unseated while under pressure during removal, serious bodily injury may result.

- Slowly lower hydraulic floor jack until coil spring pressure is relieved.

19. Two through bolts (one from each side) and separate rear shock absorbers from rear axle housing.
20. Two through bolts (one from each side) and separate rear trailing rods from rear axle housing.
21. Both rear coil springs from rear axle housing.
22. Rear axle housing from under vehicle.

Clean

- Rear axle housing thoroughly with solvent and dry.

Inspect

- Rear axle housing mating surfaces and flanges for cracks or other damage. Replace as necessary.

Install or Connect

Tools Required:
J 29039 Axle Shaft Inner Oil Seal Installer
J 8092 Driver Handle

- Position rear axle housing under vehicle with hydraulic floor jack.

1. Two rear coil springs to their proper positions on the rear axle housing spring seats (Figure 33).

Important

- When installing the rear coil springs in their spring seats, make sure that the spring end with the stepped portion (landing) is aligned with the stepped portion of the rear axle housing (Figure 33).

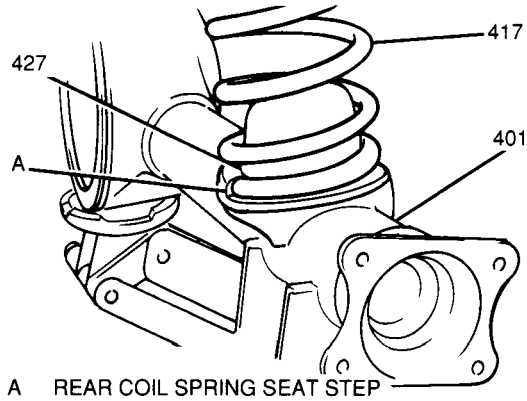

A REAR COIL SPRING SEAT STEP
401 REAR AXLE HOUSING
417 REAR COIL SPRING
427 REAR COIL SPRING SEAT

NC4033-4B-JT-RS

Figure 33 Rear Coil Spring Installation

2. Both trailing rods to rear axle housing and insert two through bolts (one in each side).
3. Both rear shock absorbers to rear axle housing and insert two through bolts (one in each side).

CAUTION: During rear coil spring installation, raise hydraulic floor jack slowly making sure rear coil springs seat correctly. If rear coil springs become unseated while under pressure during installation, serious bodily injury may result.

- Slowly raise rear axle housing with hydraulic floor jack until rear coil springs are positioned in the upper spring seats.

4. Two nuts and washers (one on each side) to rear trailing rod through bolts at rear axle housing (Figure 32).

Tighten

- Rear trailing rod through bolts and nuts to 90 N·m (66 lb.ft.).

5. Two nuts and washers (one on each side) to lower rear shock absorber through bolts at rear axle housing (Figure 32).

Tighten

- Lower rear shock absorber through bolts and nuts to 90 N·m (66 lb.ft.).

6. Rear axle breather hose to rear axle housing; secure with one clamp (Figure 31).
7. Brake fluid pipes and five brake pipe clamps to rear axle housing; secure with five screws (Figures 29 and 30).
8. Brake hose to rear axle housing brake hose bracket; secure with E-clip (Figure 29).

- Apply RTV silicone sealer GM P/N 1052917, or equivalent, to the rear axle housing brake backing plate flanges (Figure 34).

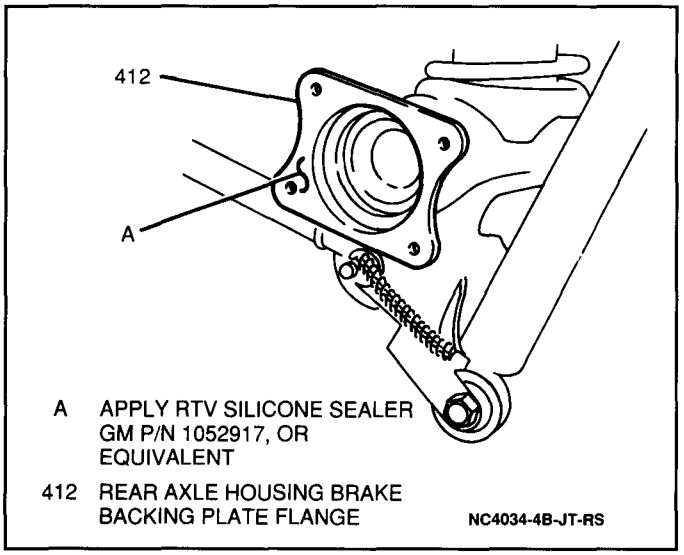

Figure 34 Rear Axle Housing Brake Backing Plate Flange

- Apply RTV silicone sealer GM P/N 1052917, or equivalent, to the differential carrier mating surface on the rear axle housing (Figure 24).

9. Differential carrier into rear axle housing; secure with eight nuts (Figure 25).

Tighten

- Differential carrier nuts to 55 N·m (41 lb.ft.).

10. Electrical connector to the rear wheel speed sensor (Figure 22).
11. Rear wheel speed sensor cover to differential carrier; secure with two bolts (Figure 22).

Tighten

- Rear wheel speed sensor cover bolts to 15 N·m (11 lb.ft.).

12. Rear control arm ball joint boss to differential carrier; secure with four bolts (Figure 21).

Tighten

- Rear control arm ball joint boss bolts to 50 N·m (37 lb.ft.).
- Rear control arm through bolts and nuts to 90 N·m (66 lb.ft.).

- Remove hydraulic floor jack from under rear axle housing.
- Raise and suitably support vehicle. Refer to SECTION 0A.

Important

- Use the index (reference) marks made in the removal procedure to ensure correct rear propeller shaft installation.

13. Rear propeller shaft into vehicle; secure with four nuts and bolts (Figure 20).

Tighten

- Rear propeller shaft nuts and bolts to 50 N·m (36 lb.ft.).

14. Both rear axle shaft inner oil seal protectors into rear axle housing.
15. New rear axle shaft inner oil seals into rear axle housing using a J 29039 and a J 8092 (Figure 19).

- Apply wheel bearing lubricant GM P/N 1051344, or equivalent, to the new seal lip.

16. Both rear axle shafts into rear axle housing. Refer to "Rear Axle Shaft and Bearing" earlier in this section.
17. Rear brake drums to rear axle. Refer SECTION 5C.

- Bleed rear brakes. For rear brake bleeding procedures, refer to SECTION 5.

18. Rear tire and wheel assemblies. Refer to SECTION 3E.

- Apply Loctite® pipe sealant GM P/N 1052080, or equivalent, to the threaded portion of the rear axle housing drain plug.

19. Rear axle housing drain plug into rear axle housing (Figure 5).

Tighten

- Rear axle housing drain plug to 25 N·m (18 lb.ft.).

- Refill the rear axle housing with approximately 2.2 liters (4.6 pts.) of synthetic gear lubricant GM P/N 12345836, or equivalent. Oil level should be even with the bottom of the rear axle housing oil level/filler plug hole.

20. Rear axle housing oil level/filler plug into rear axle housing (Figure 5).

Tighten

- Rear axle housing oil level/filler plug to 50 N·m (36 lb.ft.).

- Lower vehicle.

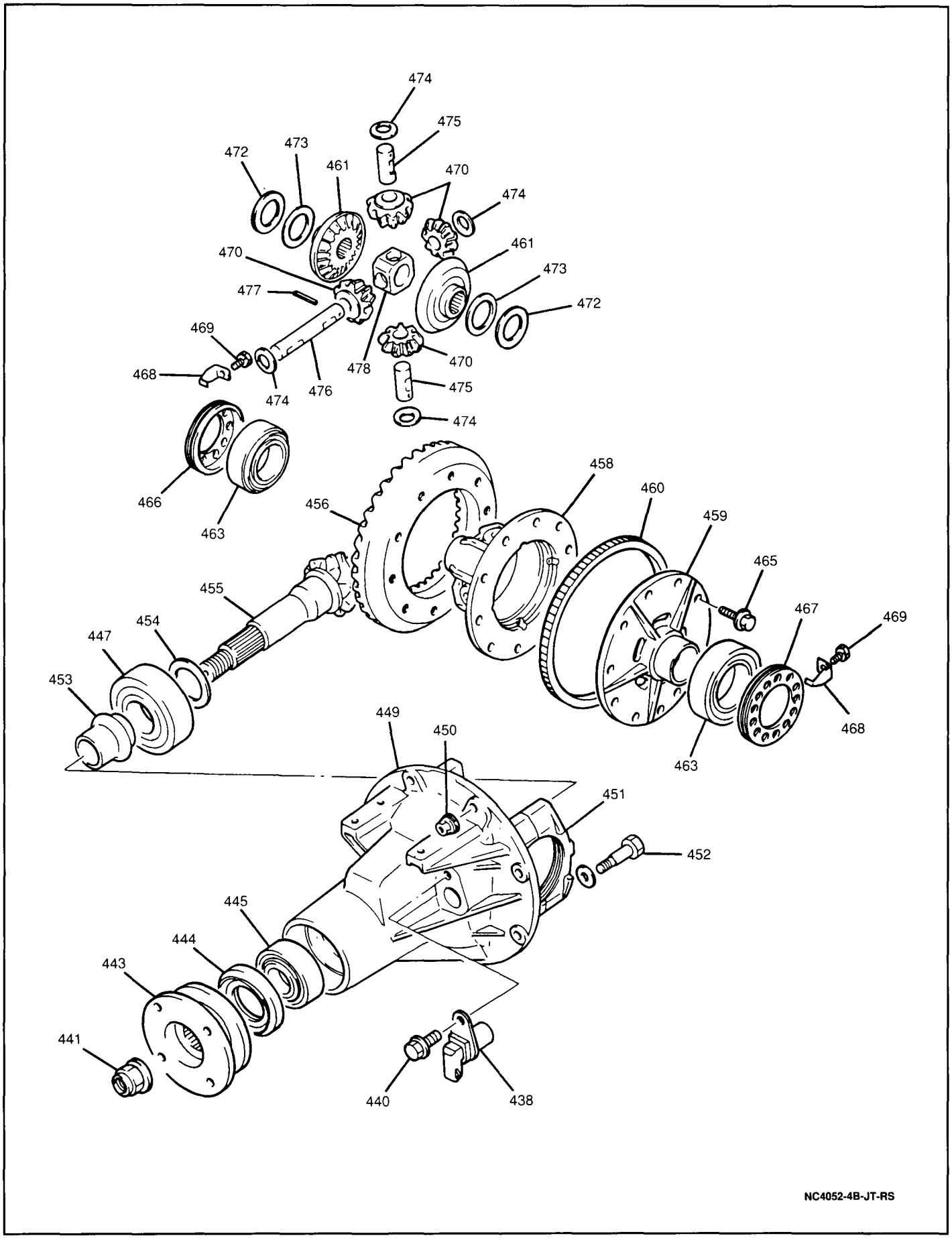

Figure 35 Differential Carrier Components

438 REAR WHEEL SPEED SENSOR
440 RWAL BRAKE SPEED SENSOR BOLT
441 PINION FLANGE NUT
443 PINION FLANGE
444 PINION SEAL
445 OUTER PINION BEARING
447 INNER PINION BEARING
449 DIFFERENTIAL CARRIER
450 DIFFERENTIAL CARRIER NUTS
451 SIDE BEARING CAP
452 SIDE BEARING CAP BOLT
453 COLLAPSIBLE SPACER
454 PINION SELECTIVE SHIM
455 PINION GEAR
456 RING GEAR
458 RIGHT DIFFERENTIAL CASE
459 LEFT DIFFERENTIAL CASE
460 RWAL EXCITER RING
461 SIDE GEAR
463 SIDE BEARING
465 RING GEAR BOLTS
466 RIGHT SIDE BEARING ADJUSTER
467 LEFT SIDE BEARING ADJUSTER
468 SIDE BEARING LOCK PLATE
469 SIDE BEARING LOCK PLATE BOLT
470 DIFFERENTIAL PINION GEAR
472 SIDE GEAR WASHER
473 SIDE GEAR SPRING WASHER
474 PINION WASHER
475 PINION CROSS SHAFT (SHORT)
476 PINION CROSS SHAFT (LONG)
477 CROSS SHAFT ROLL PIN
478 CROSS SHAFT JOINT

NC5053-4B-JT-RS

Figure 36 Differential Carrier Components–Legend

UNIT REPAIR

DIFFERENTIAL CARRIER DISASSEMBLY

Figures 35 through 54

Remove or Disconnect

Tools Required:
- J 3289-21 Differential Holding Fixture
- J 37769 Differential Holding Fixture Adapters
- J 3289-20 Holding Fixture Bench Mount
- J 8614-01 Flange Holder
- J 22912-01 Rear Bearing Remover
- J 22888-D Side Bearing Remover
- J 8107-4 Differential Side Bearing Remover Plug
- J 26941 Axle Shaft Seal Remover
- J 23907 Slide Hammer

- Mount differential carrier into a J 3289-21 with the J 37769.
- Place differential carrier and holding fixture into a J 3289-20 (Figure 37).

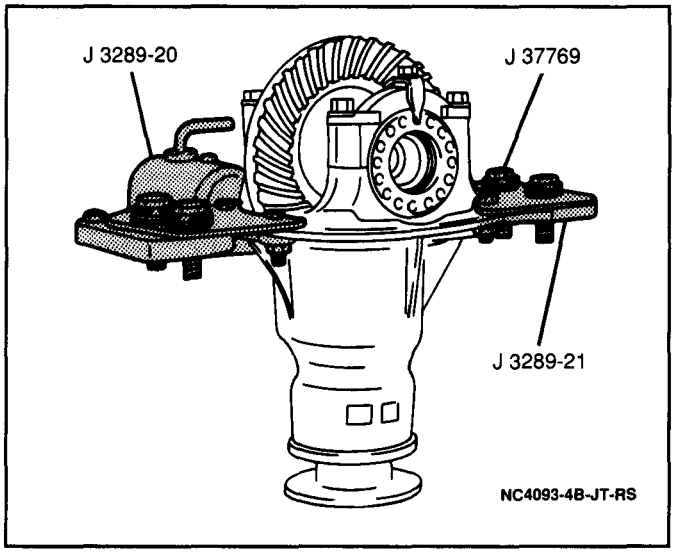

Figure 37 Differential Carrier Mounting

- Inscribe alignment marks on differential side bearing caps to ensure proper assembly.

1. Two bolts and side bearing lock plates from side bearing caps (Figure 38).

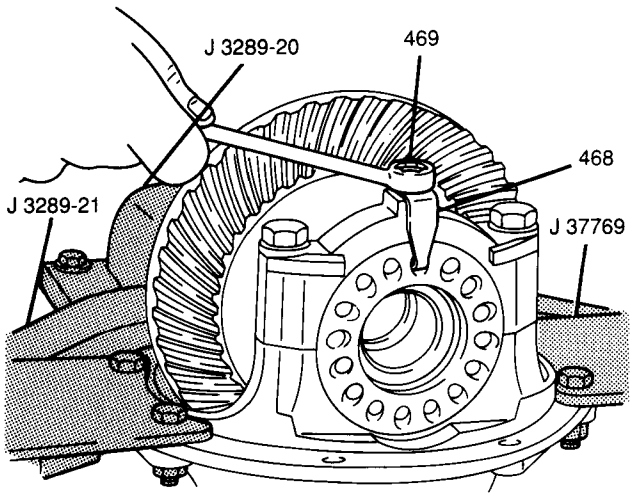

468 SIDE BEARING LOCK PLATE
469 SIDE BEARING LOCK PLATE BOLT
NC4035-4B-JT-RS

Figure 38 Removing Side Bearing Lock Plate Bolts

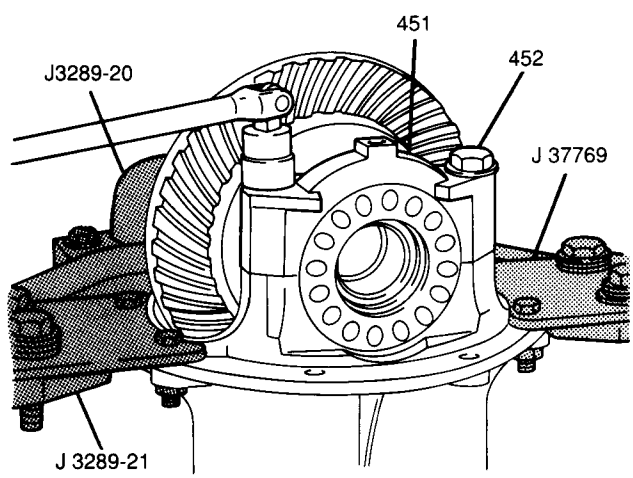

451 SIDE BEARING CAP
452 SIDE BEARING CAP BOLT
NC4036-4B-JT-RS

Figure 39 Removing Side Bearing Cap Bolts

2. Four bolts and side bearing caps from differential carrier (Figure 39).
3. Side bearing adjusters and bearing races from differential carrier (Figure 40).

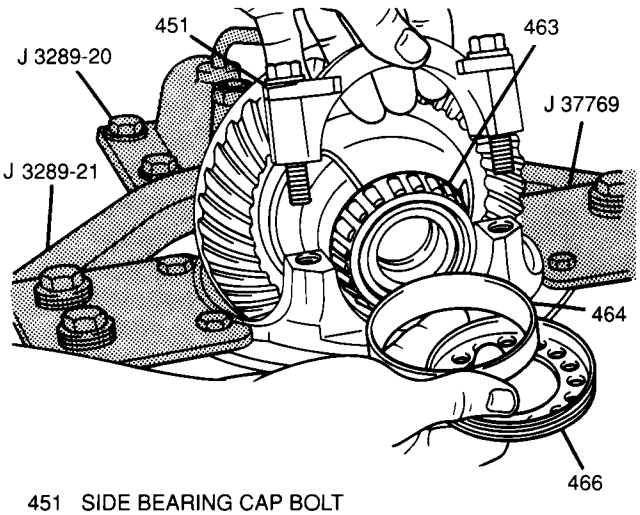

451 SIDE BEARING CAP BOLT
463 SIDE BEARING
464 SIDE BEARING RACE
466 RIGHT SIDE BEARING ADJUSTER
NC4037-4B-JT-RS

Figure 40 Removing Side Bearing Adjusters and Races

4. Differential ring gear and case from differential carrier.
- Turn differential carrier and holding fixture over so that pinion flange nut is horizontal (90 degrees).

5. One bolt and rear wheel speed sensor.
- Unstake pinion flange nut.

6. Pinion flange nut from pinion gear using a J 8614-01 to hold the pinion flange stationary (Figures 41 and 42).

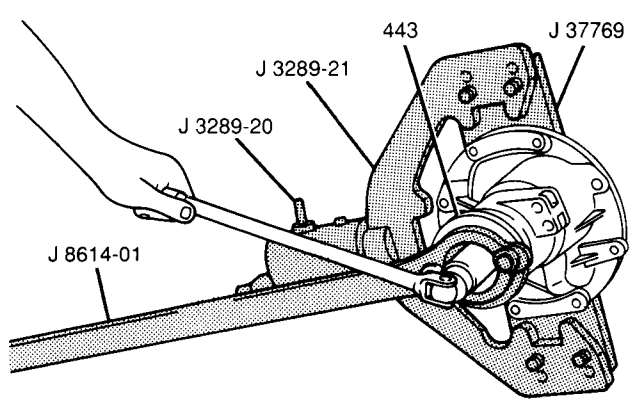

443 PINION FLANGE
NC4038-4B-JT-RS

Figure 41 Removing Pinion Flange Nut

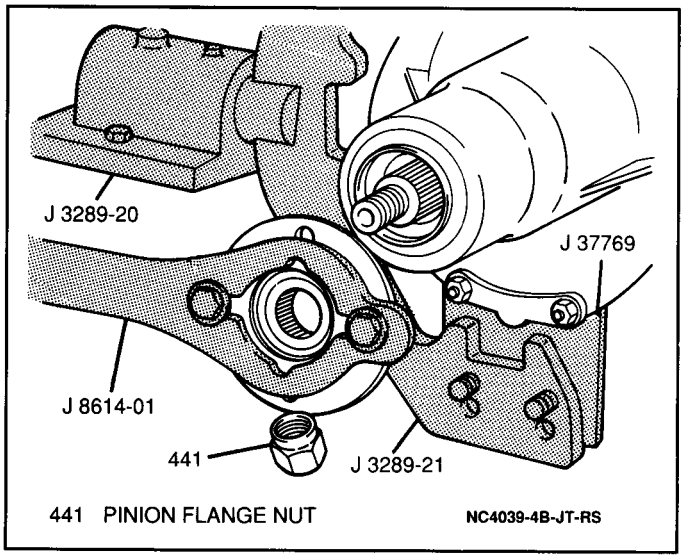

Figure 42 Pinion Nut and Pinion Flange

7. Pinion gear from differential carrier (Figure 43).

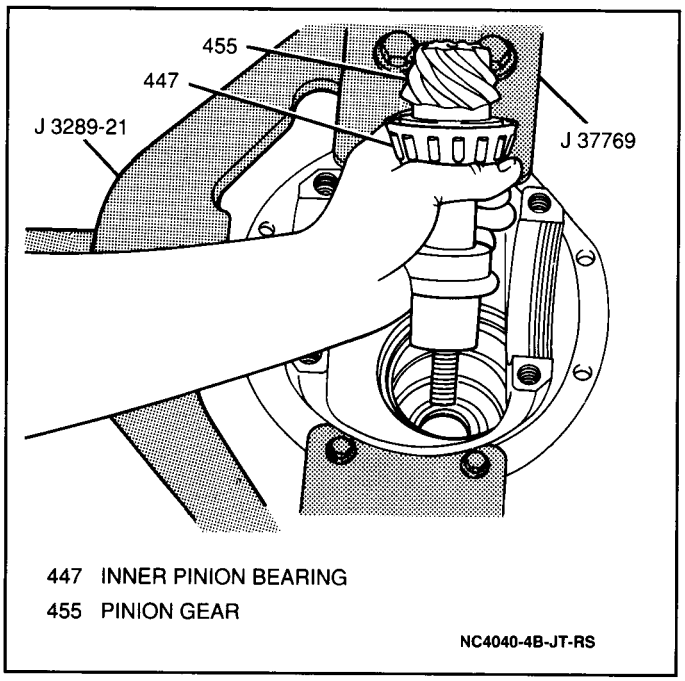

Figure 43 Removing Pinion Gear

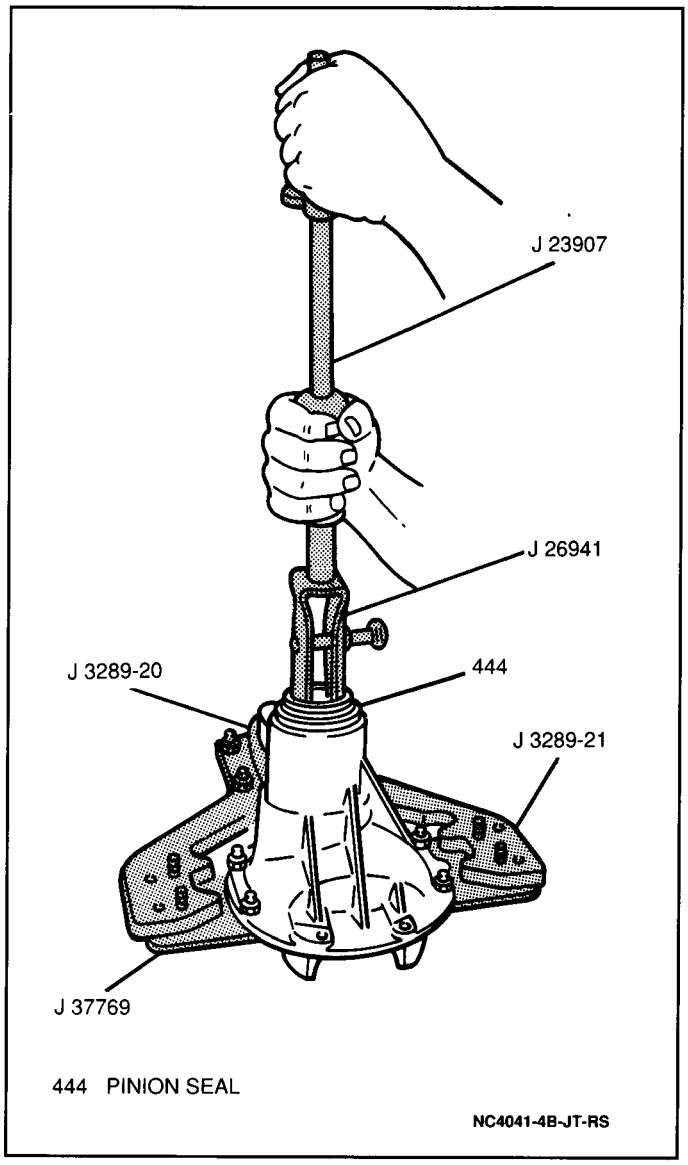

Figure 44 Removing Pinion Seal

8. Pinion seal from differential carrier using a J 26941 with a J 23907 (Figure 44).

9. Outer pinion bearing from differential carrier (Figure 45).

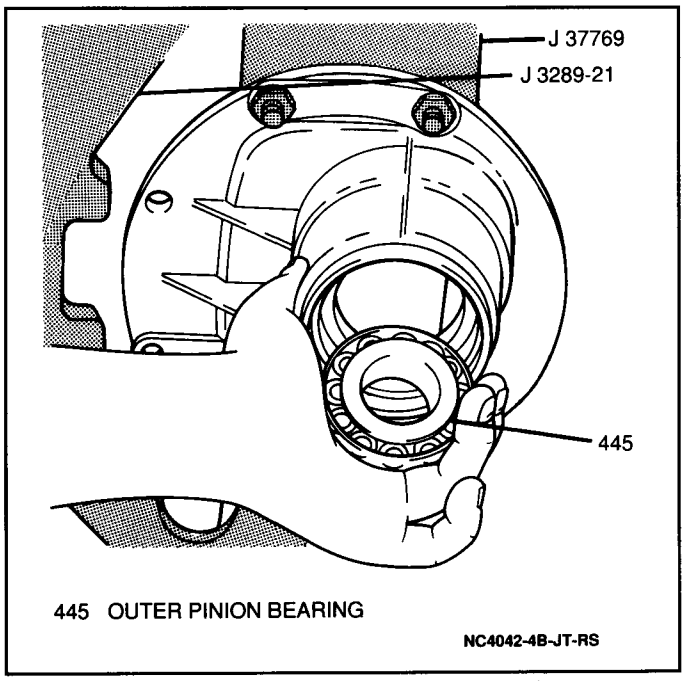

Figure 45 Removing Outer Pinion Bearing

10. Inner pinion bearing race from differential carrier using a large drift punch and hammer. Tap around the rear of the rear of the bearing race and slowly drive each race out evenly (Figure 46).

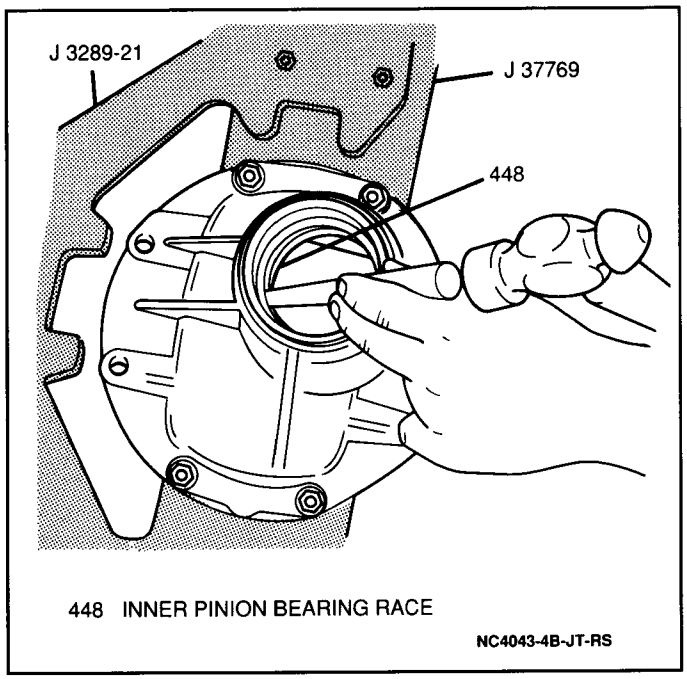

Figure 46 Removing Inner Pinion Bearing Race

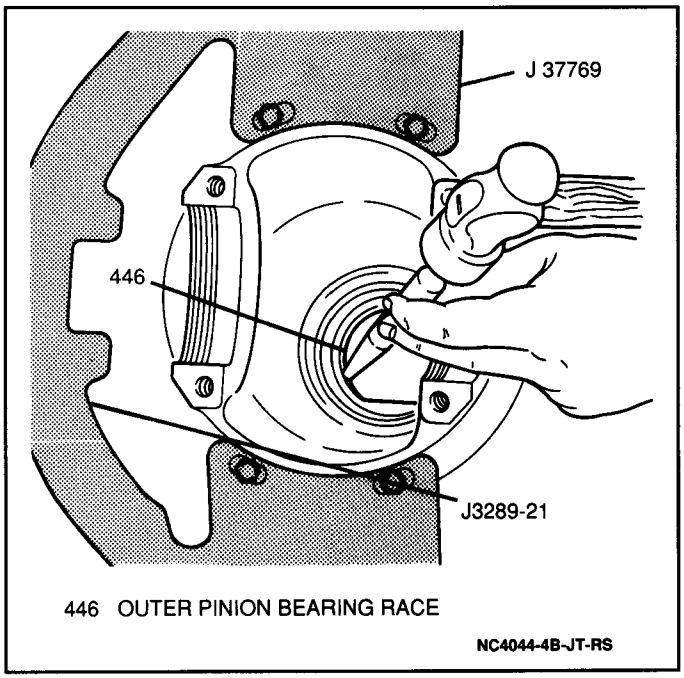

Figure 47 Removing Outer Pinion Bearing Race

11. Outer pinion bearing race from differential carrier using a large drift punch and hammer. Tap around the rear of the rear of the bearing race and slowly drive each race out evenly (Figure 47).
12. Side bearings from differential case using a J 22888-D with a J 8107-4 (Figure 48).

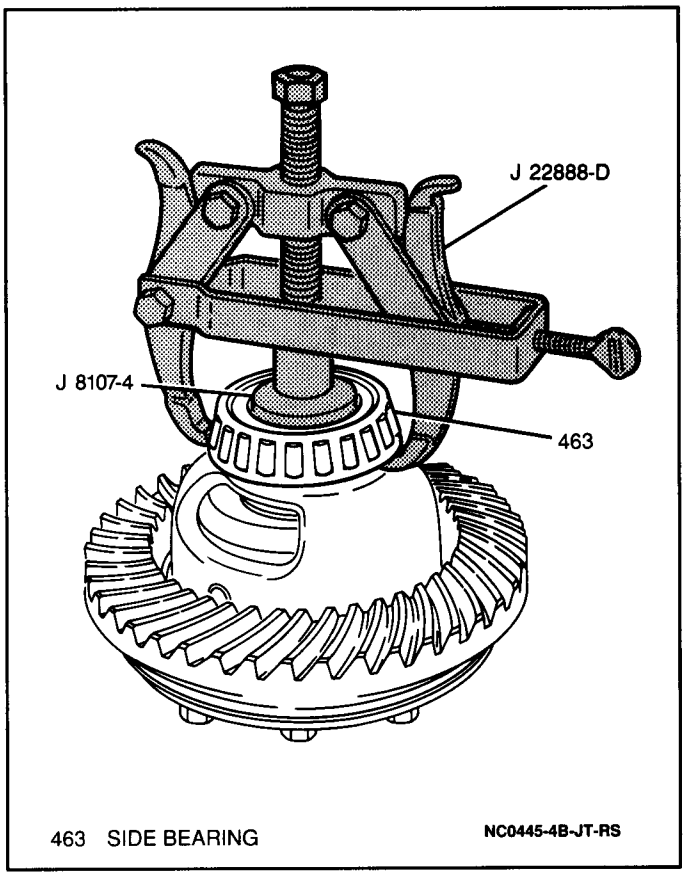

Figure 48 Removing Side Bearings

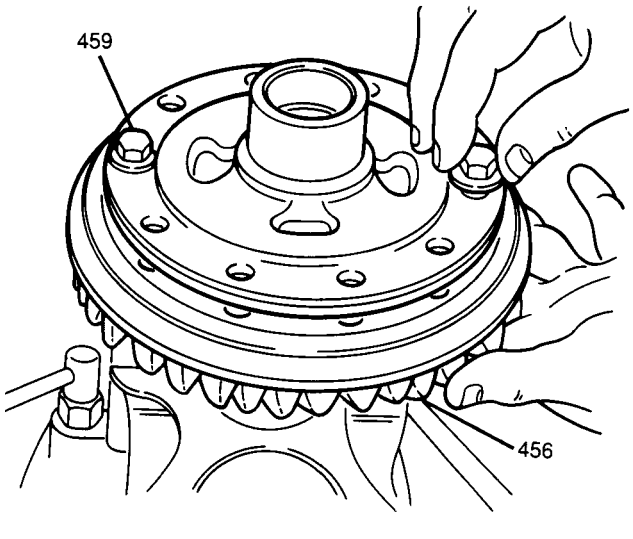

456 RING GEAR
459 LEFT DIFFERENTIAL CASE
NC0446-4B-JT-RS

Figure 49 Removing Ring Gear Bolts

13. Ten bolts and ring gear from differential case (Figure 49).
- Separate right and left differential case halves.
14. Exciter ring from left case using a copper hammer. Tap gently around the outer edge of the exciter ring evenly until the exciter ring is free of the left differential case half.
15. Three roll pins from right differential case using a hammer and standard drift punch and disassemble side gears and washers, differential pinion gears and washers, cross shafts, and pinion cross shaft joint (Figure 50).

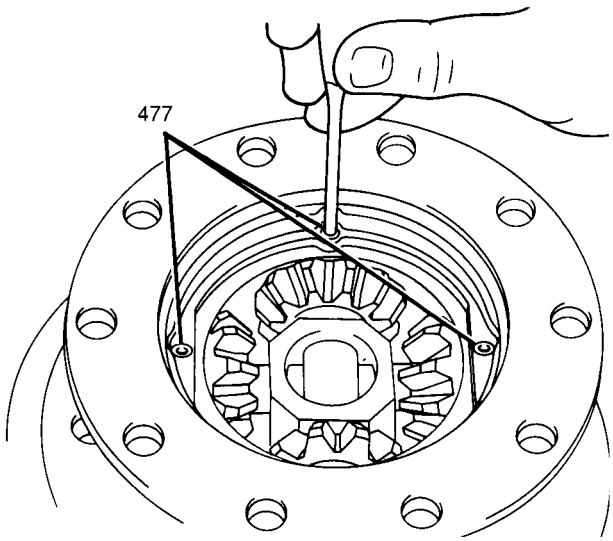

477 CROSS SHAFT ROLL PINS
NC4047-4B-JT-RS

Figure 50 Removing Roll Pins From Differential Case

16. Collapsible spacer from pinion gear shaft.
17. Inner pinion bearing from pinion gear shaft using a J 22912-01. Place the J 22912-01 on the pinion gear shaft with the concave side toward the pinion gear. Then place the pinion gear in a hydraulic press and remove the rear pinion bearing (Figure 51).
18. Pinion selective shim from pinion shaft.

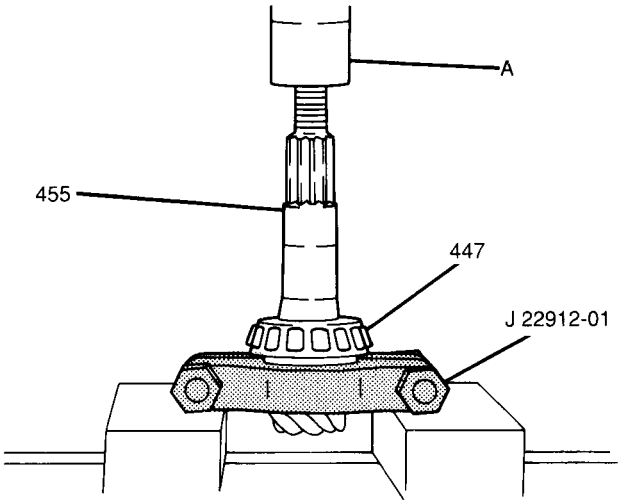

A PRESS ARBOR
447 INNER PINION BEARING
455 PINION GEAR
NC4048-4B-JT-RS

Figure 51 Removing Inner Pinion Bearing

Clean

- All parts thoroughly with solvent and air dry. If compressed air is used to dry parts, DO NOT spin dry roller bearings with compressed air or bearing damage may result.

Inspect

1. Differential carrier and case halves for cracks or stripped threads. Replace as necessary (Figures 52 and 53).

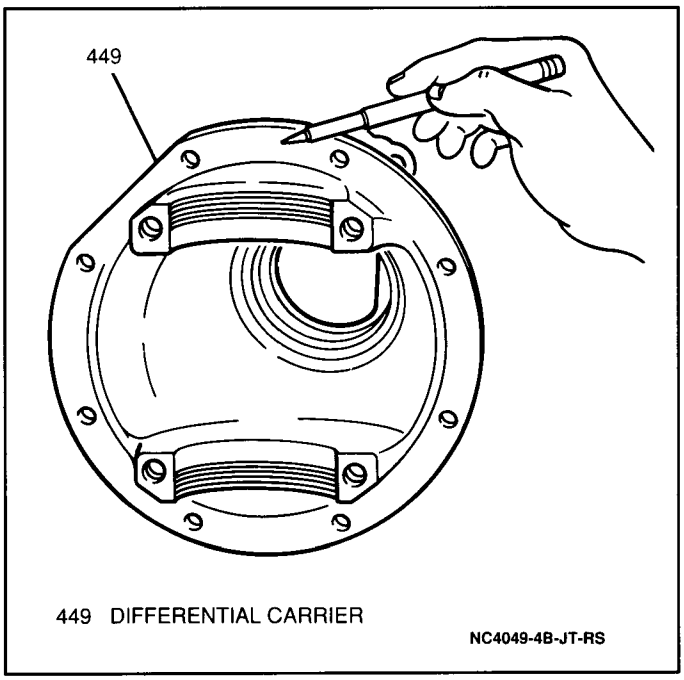

Figure 52 Inspecting Differential Carrier

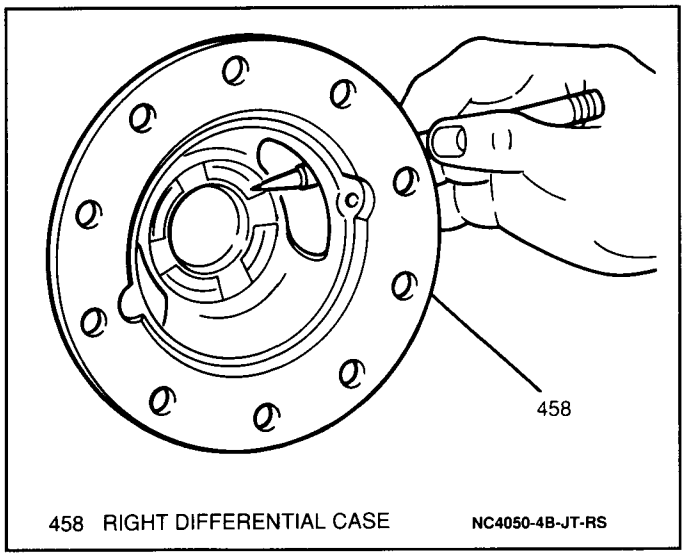

Figure 53 Inspecting Differential Case

2. Ring and pinion gears for excessive or unusual wear, cracks, overheating or other damage. Replace as necessary (Figure 54).

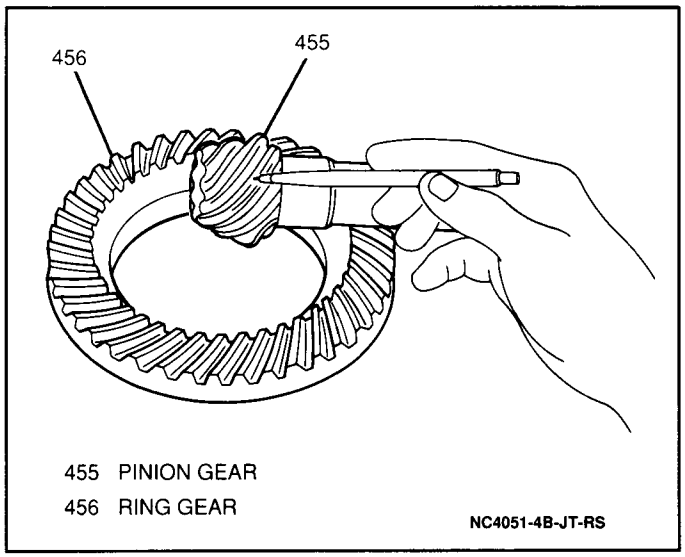

Figure 54 Inspecting Ring and Pinion Gears

3. All roller bearings and races for roughness, brinelling, or other wear or damage. Replace as necessary.
4. Side and differential pinion gears for unusual wear or damage. Replace as necessary.

Important

- Differential components are set to very close tolerances and prone to wear should one component fail. To ensure accurate adjustment and even wear, the ring and pinion gears as well as all tapered roller bearings and races must be replaced as sets.

DIFFERENTIAL CARRIER ASSEMBLY

Figures 55 through 88

Install or Connect

Tools Required:
- J 8107-4 Differential Side Bearing Remover Plug
- J 8092 Driver Handle
- J 37758 Pinion Outer Race Installer
- J 37759 Pinion Inner Bearing Race Installer
- J 35138 Side Gear Thrust Play Tool
- J 38891 Wheel Speed Sensor Ring Installer
- J 38890 Differential Torque Check Tool

1. Rear wheel antilock (RWAL) exciter ring onto left differential case half using a J 38891 exciter ring installer and a J 8107-04 (Figure 55). Place the exciter ring inside the J 38891 on a hydraulic press. Then, center the left differential case half in the exciter ring with a J 8107-4 side in the left axle shaft bore and slowly press the left differential case half evenly into the exciter ring.

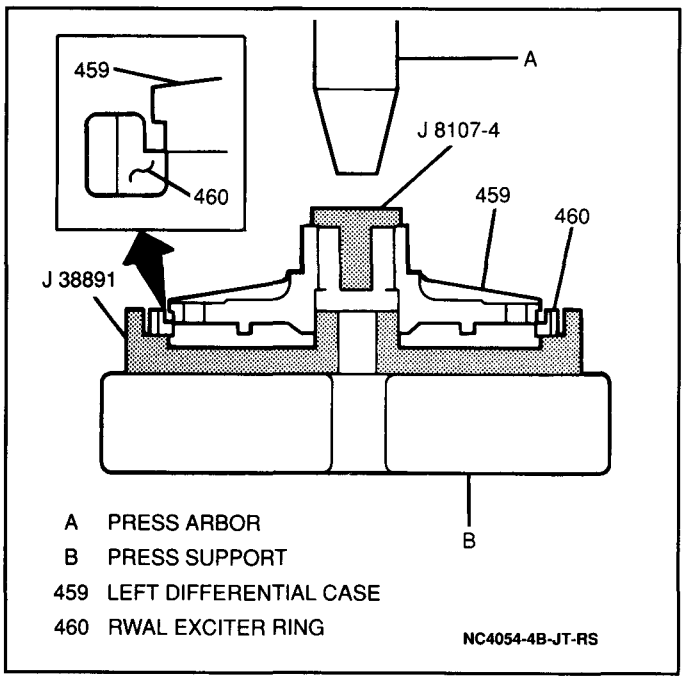

Figure 55 Installing Exciter Ring Onto Left Differential Case

Important

- Observe hydraulic pressure gage during exciter ring installation. Pressure exerted on the exciter ring should not exceed 500 kg (1102 lbs.). If pressure higher than specified is needed to install the left differential case into the exciter ring, the two components may be misaligned. Reposition the left differential case in the exciter ring so that pressure will be even around the perimeter and repeat the installation procedure.

Inspect

- Left differential case face to make sure the exciter ring is flush with or higher than the left differential case (Figure 56).

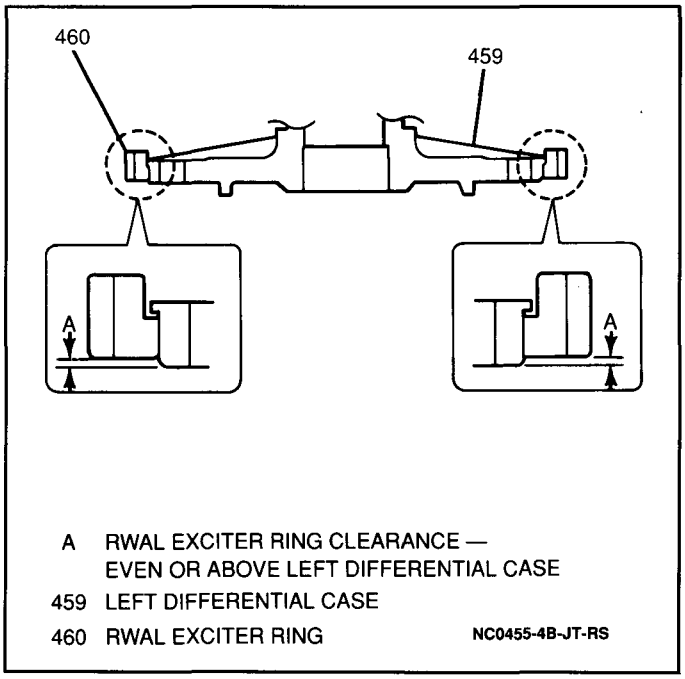

Figure 56 Exciter Ring Position on Left Differential Case

2. Rear wheel speed sensor; secure with rear wheel speed sensor bolt.

Tighten

- Rear wheel speed sensor bolt to 23 N·m (17 lb.ft.).

3. Right side gear and washers, differential pinion gears and washers, cross shafts and pinion cross shaft joint in right differential case (Figure 57).

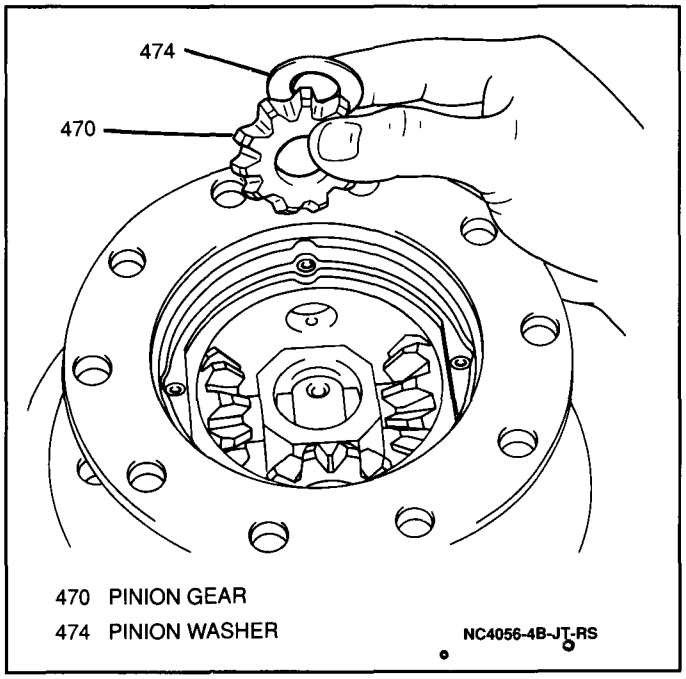

Figure 57 Installing Differential Pinion Gears

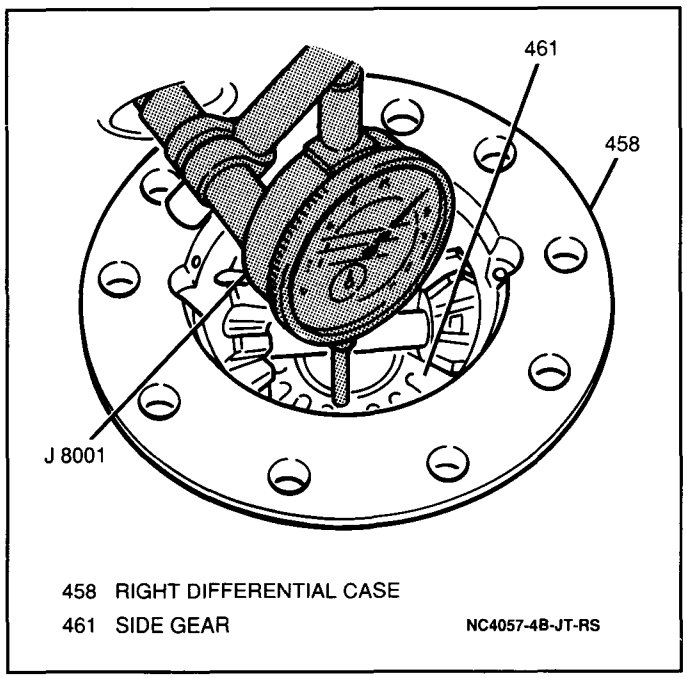

Figure 58 Measuring Right Differential Side Gear End Play

Measure

Tool Required:
J 8001 Dial Indicator Set

- Right differential side gear end play using a J 8001 (Figure 58). Insert fingers through the bottom openings of the right differential case half and move the right differential side gear up and down while observing the J 8001. Right differential side gear end play should measure 12 to 37 mm (0.005 to 0.014-inch). If right differential side gear end play is too high or low, replace the selective shim with the appropriate size to obtain correct end play.

4. Cross shaft roll pins into right differential case half. Roll pin ends should be flush with the right differential case surface (Figure 59).

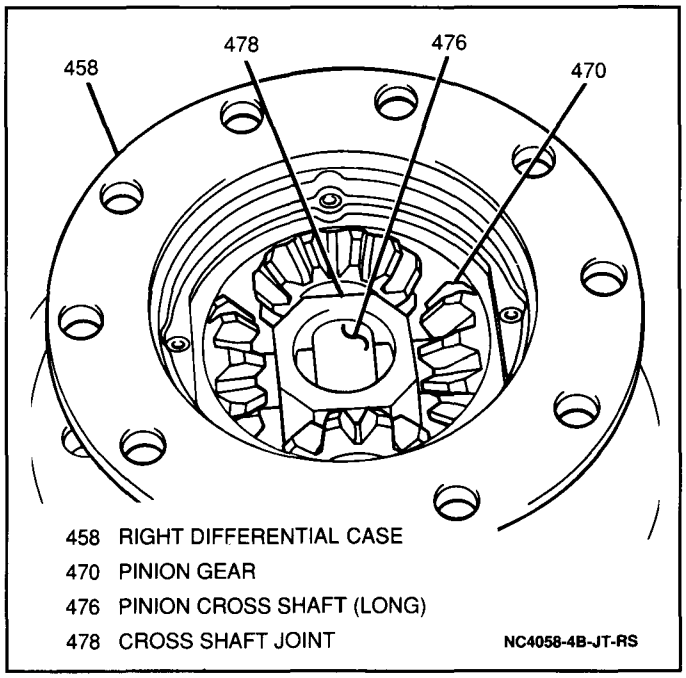

Figure 59 Cross Shaft Roll Pin Installation

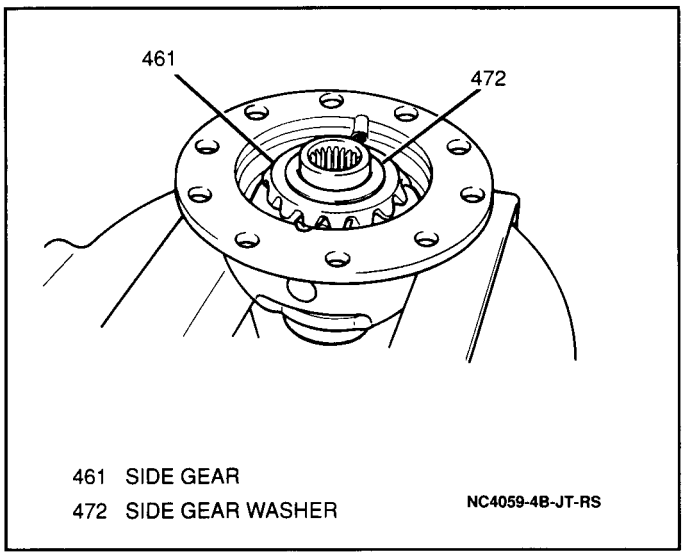

Figure 60 Left Side Gear With Washers

5. Left differential side gear and washers into right differential case (Figure 60).
6. Left differential case half and ring gear to right differential case half; secure with ten bolts (Figure 61).

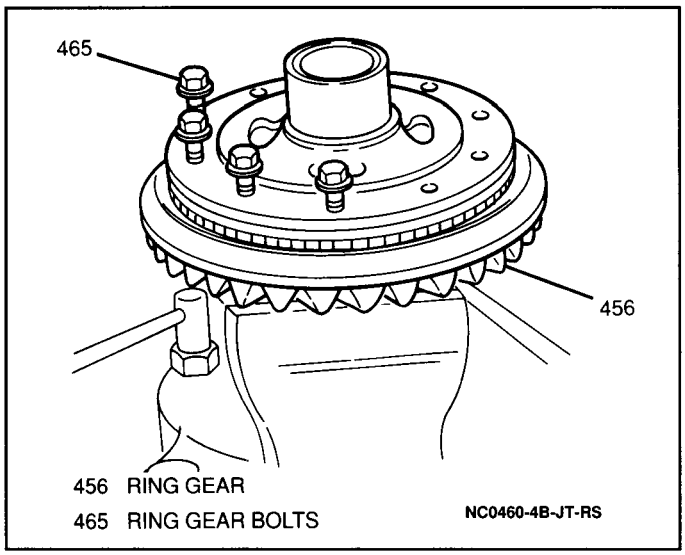

Figure 61 Installing Ring Gear Bolts

Tighten

- Ring gear bolts to 100 N·m (72 lb.ft.).

Measure

Tools Required:
J 8001 Dial Indicator Set
J 35138 Side Gear Thrust Play Tool
J 38890 Differential Torque Check Tool

1. Left differential side gear end play using a J 8001 and a J 35138 (Figure 62). Insert the J 35138 in through the left axle shaft differential case bore and adjust until the J 35138 has a firm grasp on the left differential side gear. Then, move J 35138 up and down while observing the J 8001. Left differential side gear end play should measure 12 to 37 mm (0.005 to 0.014-inch). If left differential side gear end play is too high or low, replace the selective shim with the appropriate size to obtain correct end play.

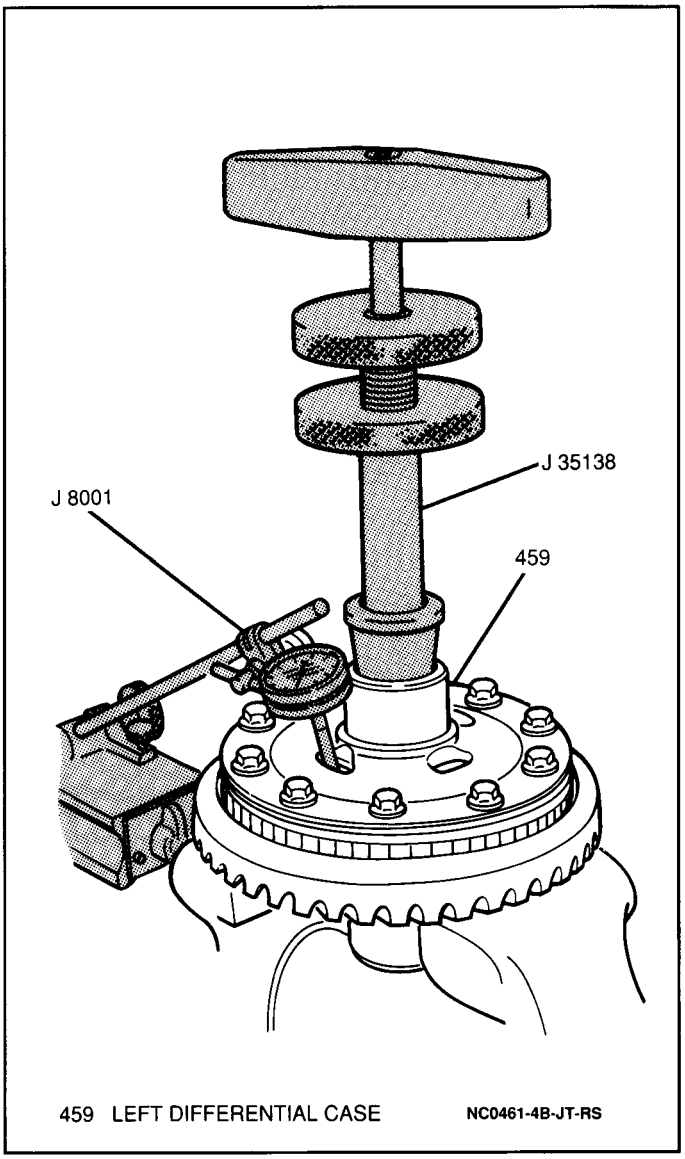

Figure 62 Measuring Left Differential Side Gear End Play

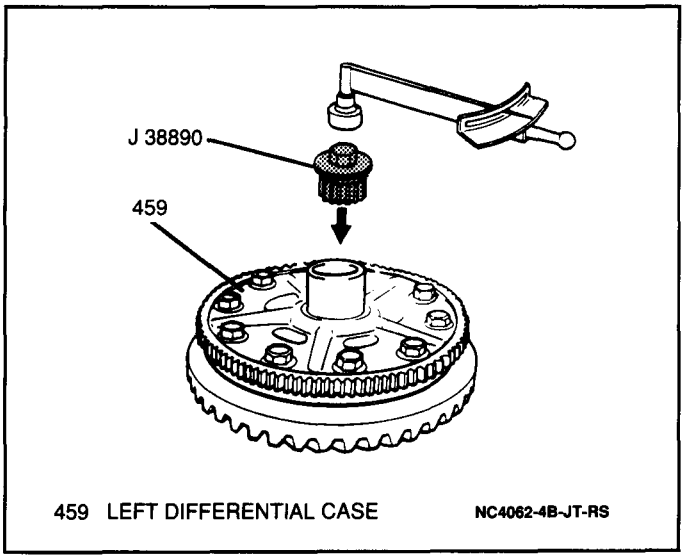

Figure 63 Measuring Side Gear Preload

2. Side gear preload using a J 38890. Insert the J 38890 into either side bearing and with a torque wrench, measure the side bearing preload (Figure 63). Maximum side gear preload should be 2.4 N·m (21 lb.in.). If preload exceeds specification, inspect side and differential pinion gears for foreign material or damage.

Important

- After correct end play and preload has been obtained, remove the ring gear bolts and apply Loctite® 414 GM P/N 12345093, or equivalent, to the threaded portion of each ring gear bolt and install into differential case assembly.

Tighten

- Ring gear bolts to 100 N·m (72 lb.ft.).

7. Right differential side bearing on the right side of the differential case assembly using a J 37758 with a J 8092 (Figure 64). Place the differential case assembly on a hydraulic press and using a J 8107-4 for support. Then, using the J 37759 with the J 8092, place the right differential side bearing on the right differential case with the taper side up and slowly press the right differential side bearing onto the right differential case.

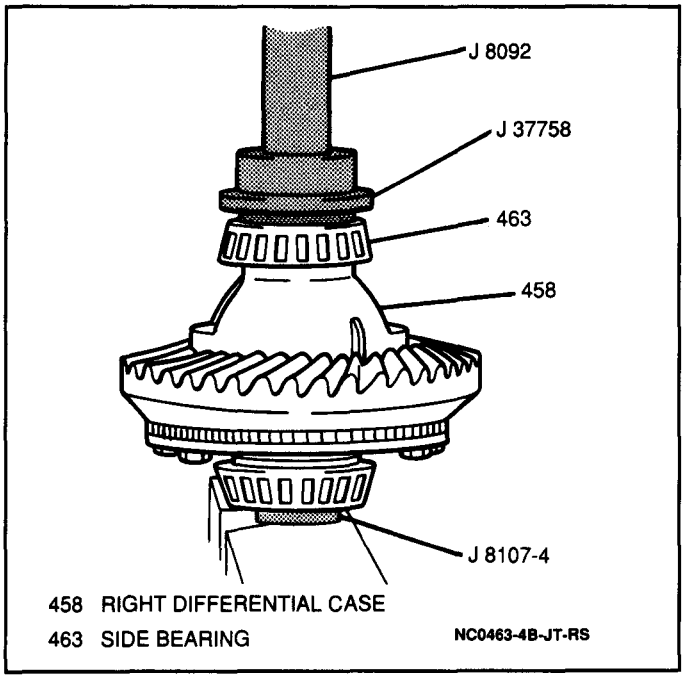

Figure 64 Installing Right Differential Side Bearing

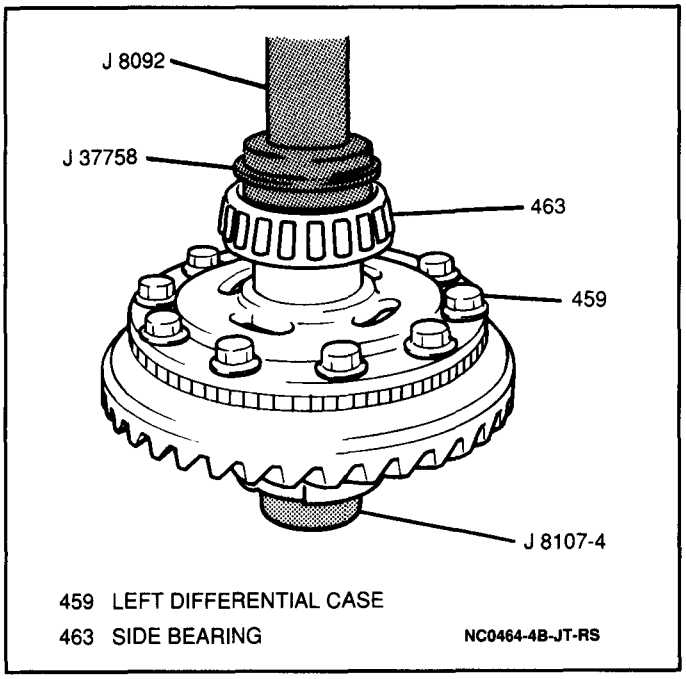

Figure 65 Installing Left Differential Side Bearing

8. Left differential side bearing to the left side of the differential case assembly using a J 37758 with a J 8092 and a J 8107-4 (Figure 65). Place the differential case assembly on a hydraulic press with a J 8107-4 for support and to protect the right differential side bearing. Then, using the J 37758 with the J 8092, place the left differential side bearing on the left differential case with the taper side up and slowly press the left differential side bearing evenly onto the left differential case.
9. Inner pinion bearing race using a J 37759 with a J 8092 (Figure 66). Place the differential carrier on a hydraulic press and position the inner pinion bearing race over its bore. Then, using the J 37759 inner with the J 8092, slowly press the inner pinion bearing race evenly into the differential carrier.

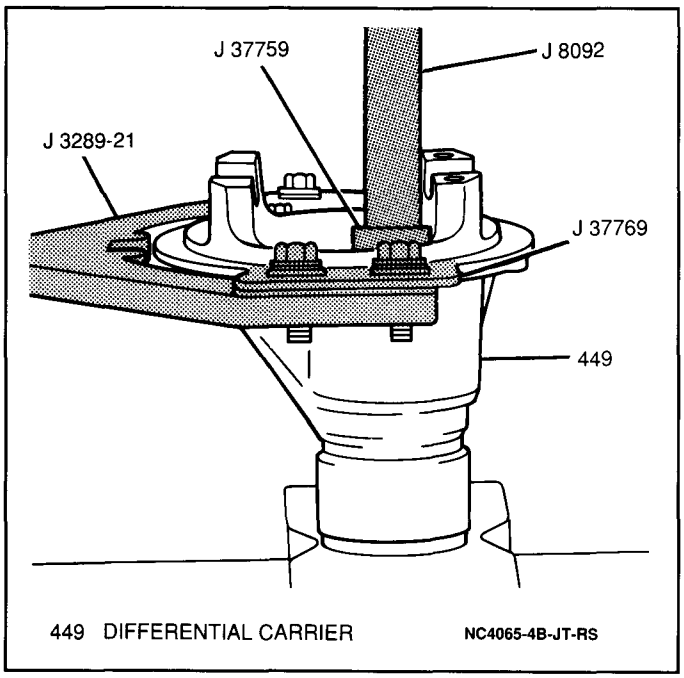

Figure 66 Installing Inner Pinion Bearing Race

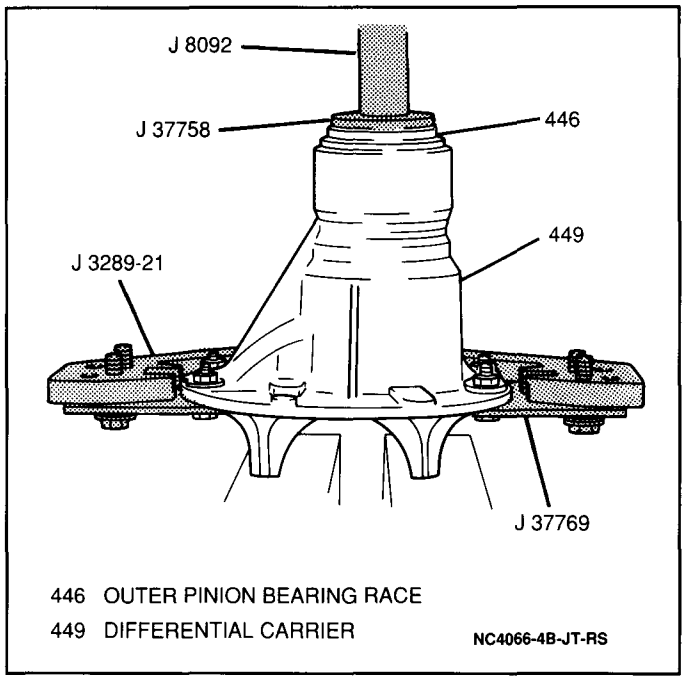

Figure 67 Installing Outer Pinion Bearing Race

10. Outer pinion bearing race using a J 37758 with a J 8092 (Figure 67). Place the differential carrier on a hydraulic press and position the outer pinion bearing race over its bore. Then, using the J 37758 with the J 8092, slowly press the outer pinion bearing race evenly into the differential carrier.

Setting Pinion Depth

Pinion depth (the distance from the face of the pinion gear to the center line of the ring gear) is critical to all differentials. Each ring and pinion gear set is matched so as to produce the best tooth contact pattern. This relationship (pinion depth) is controlled by placing the proper selective shim between the pinion gear and the inner bearing. If the original ring and pinion gears and pinion bearings are reused, the original size selective shim will set the proper pinion depth. Pinion depth is set with a J 21777-B Pinion Setting Gage Set which provides a "nominal" or "zero" as a gaging reference to find the pinion center.

Pinion Depth Setting Procedure

Figures 68 through 76

Tools Required:
- J 8001 Dial Indicator Set*
- J 23597-1 Arbor*
- J 23597-12 Pilot Washer*
- J 21777-42 Pilot Washer*
- J 21777-43 Stud Assembly*
- J 21777-101 Side Bearing Discs*
- J 21777-102 Gage Plate*
- * Included in J 21777-B Pinion Setting Gage Kit

1. Lubricate both inner and outer pinion bearings with wheel bearing lubricant GM P/N 1051344, or equivalent.
2. Place both inner and outer pinion bearings into the differential carrier and install a J21777-102, a J23597-12, a J 21777-43 and a J 21777-42 (Figures 68, 69 and 70).

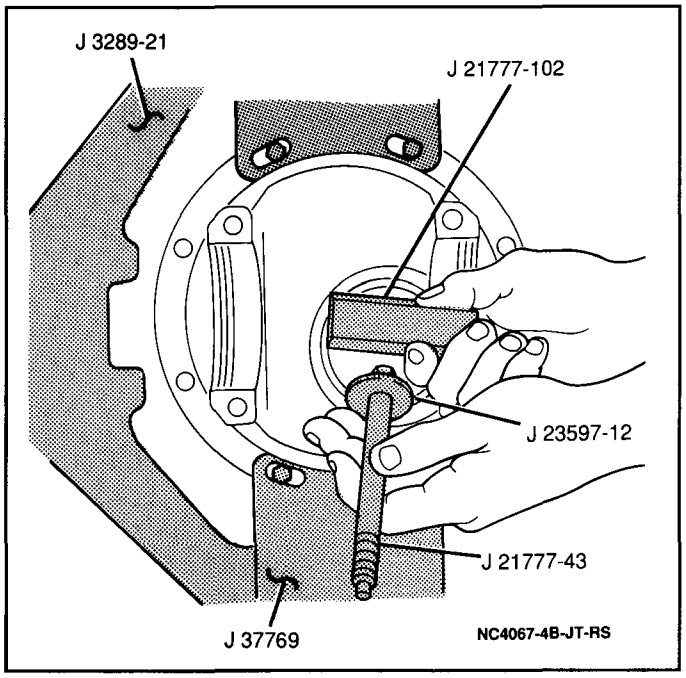

Figure 68 Assembling Gage Block and Stud

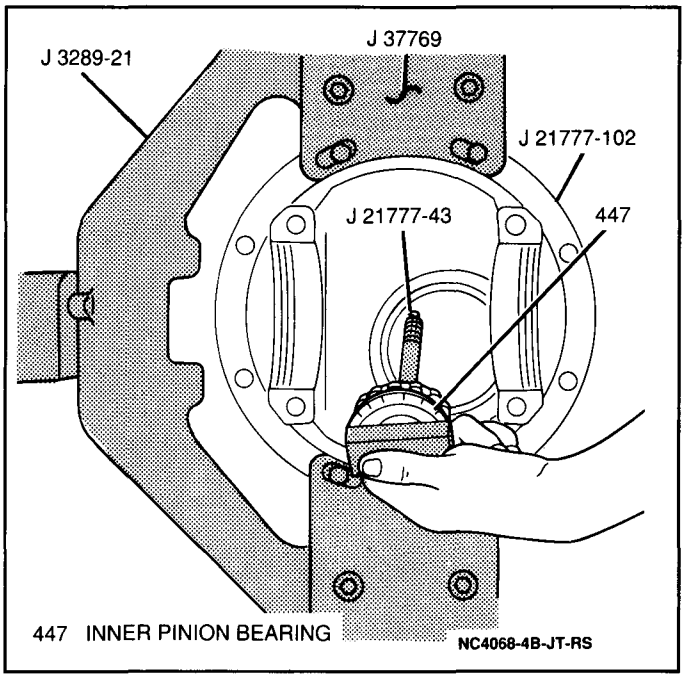

Figure 69 Installing Inner Pinion Bearing With Gage Block and Stud

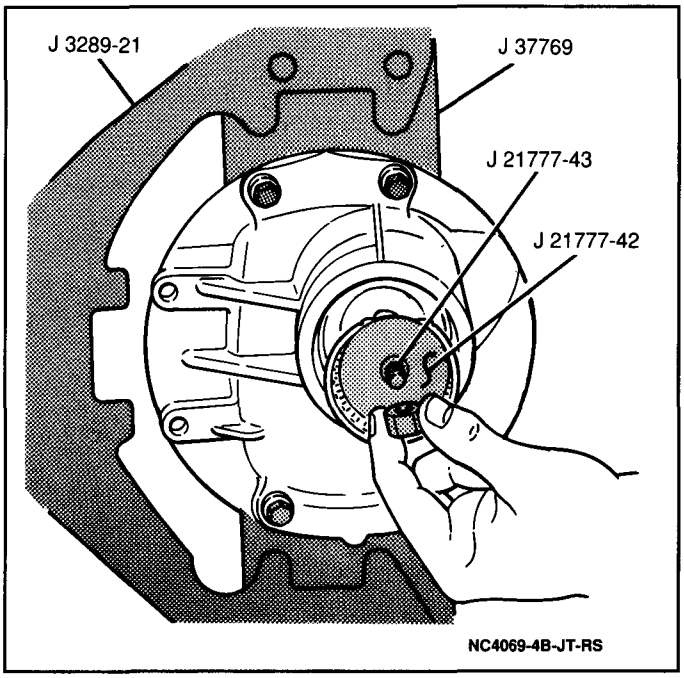

Figure 70 Installing Outer Pinion Bearing, Pilot Washer and Nut

3. Hold the J 21777-43 stationary and tighten the jam nut to 2 N·m (18 lb.in.) (Figure 71).

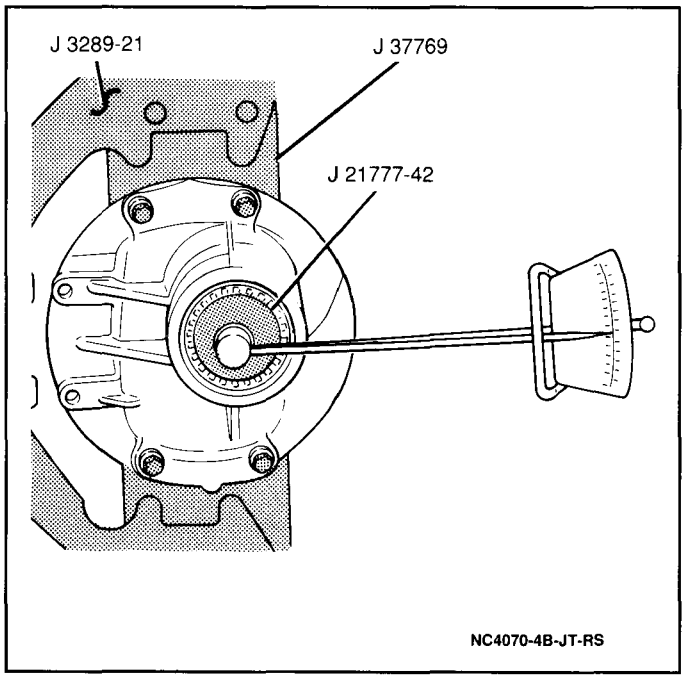

Figure 71 Adjusting Jam Nut Torque

4. Rotate the J 21777-102 25 revolutions to make sure the pinion bearings are fully seated.
5. Retighten the jam nut to 2 N·m (18 lb.in.).
6. Install the J 21777-101 in the side bearing bores with a J 23597-1 through both side bearing discs (Figure 72).

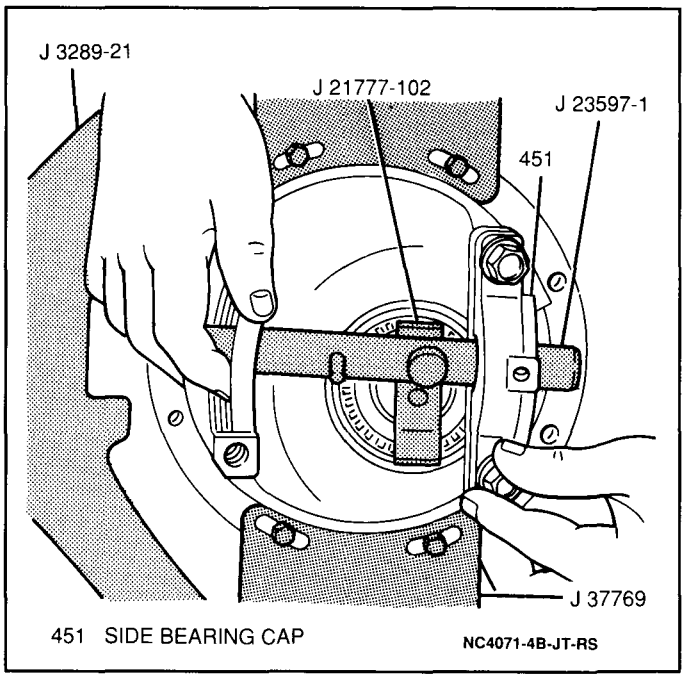

Figure 72 Installing Side Bearing Discs and Arbor

7. Rotate the J 21777-102 until both gaging levels are parallel with the J 21777-101.
8. Install the dial indicator spring loaded plunger extension through the J 23597-1 and position over the 97 mm level of the J 21777-102 (Figure 73).

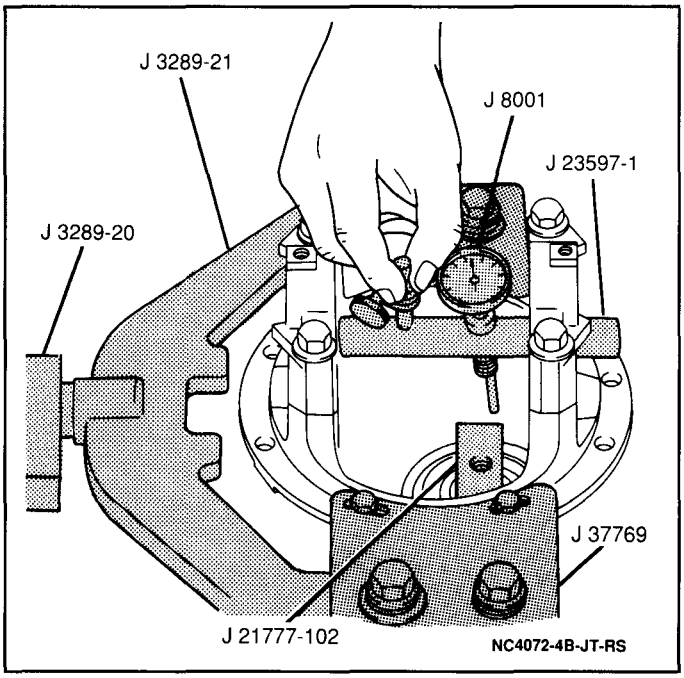

Figure 73 Installing Dial Indicator

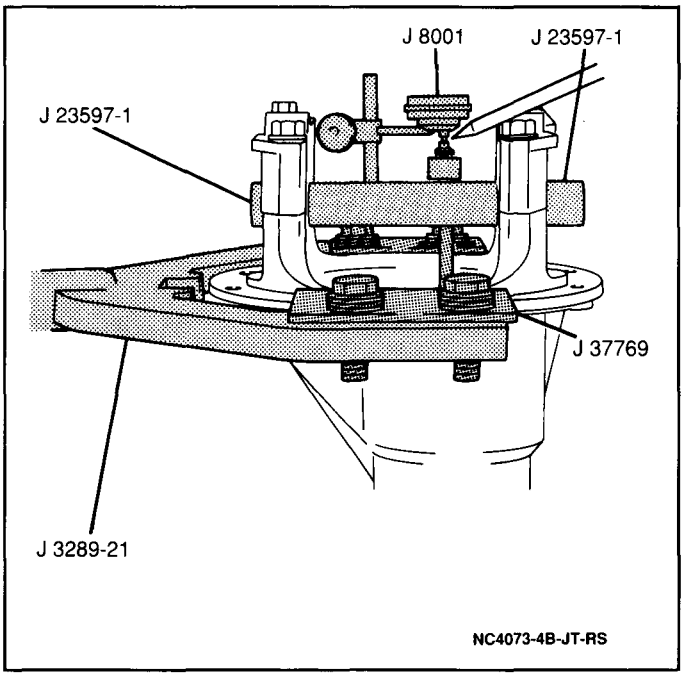

Figure 74 Setting Dial Indicator Position

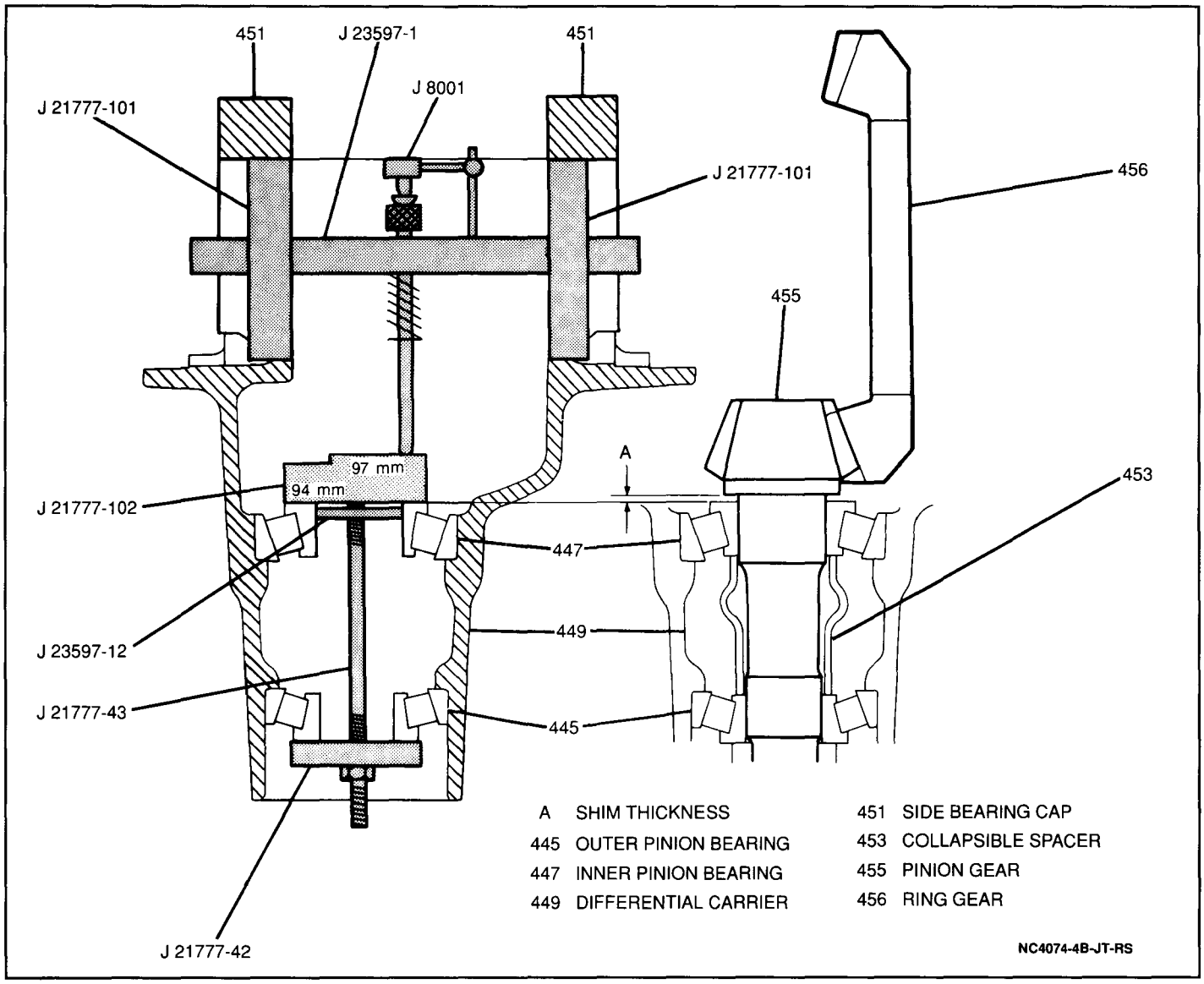

Figure 75 Special Tool Assembly for Measuring Pinion Depth

9. Install a J 8001 to the J 23597-1 and position the gage plunger over the plunger extension and slightly load the indicator (Figures 74 and 75).
10. Rotate the J 8001 adjustable face so that 0 is aligned with the dial indicator needle.
11. Slowly rotate the J 23597-1 back and forth so that the spring loaded plunger extension sweeps back and forth across the 97 mm level of the J 21777-102 while observing the dial indicator.
12. Stop the J 23597-1 at the dial indicator's greatest point of deflection.
13. Without disturbing the J 8001 needle setting, rotate the J 8001 adjustable face so that 0 is aligned with the dial indicator needle.
14. Slowly rotate the J 23597-1 one way until the spring loaded plunger extension is no longer making contact with the J 21777-102.
15. Record the deflection reading on the J 8001.

- This reading indicates the selective shim size required for the correct pinion depth. Refer to the "Pinion Depth Selective Shims" chart for the appropriate shim (Figure 76).

PART NUMBER	AVAILABLE SHIM THICKNESSES mm	in.
96057678	0.30	0.012
96057667	1.00	0.039
96057668	1.03	0.041
96057669	1.06	0.042
96057670	1.09	0.043
96057671	1.12	0.044
96057672	1.15	0.045
96057673	1.18	0.046
96057674	1.21	0.047
96057675	1.24	0.048
96057676	1.27	0.049
96057677	1.30	0.050

NC4075-4B-JT-RS

Figure 76 Pinion Depth Selective Shims

16. Remove the J 8001 and spring loaded plunger extension from the J 23597-1.
17. Remove the J 23597-1 and the two J 21777-101 from the differential carrier.
18. Remove the J 21777-102, the J 23597-12, the J 21777-43 and the J 21777-42 from the differential carrier.
19. Remove both inner and outer pinion bearings from the differential carrier.

Setting Pinion Bearing Preload

Figures 77 through 81

Install or Connect

Tools Required:
J 6133-01 Pinion Bearing Installer
J 25273 Pinion Seal Installer

1. Appropriate pinion selective shim on the pinion gear shaft.
2. Inner pinion bearing on the pinion gear shaft using a J 6133-01 (Figure 77). Place the pinion gear on a hydraulic press and install the inner pinion bearing on the pinion gear shaft with the tapered side facing away from the pinion gear. Then, place the J 6133-01 on the pinion shaft and slowly press the inner pinion bearing into place.

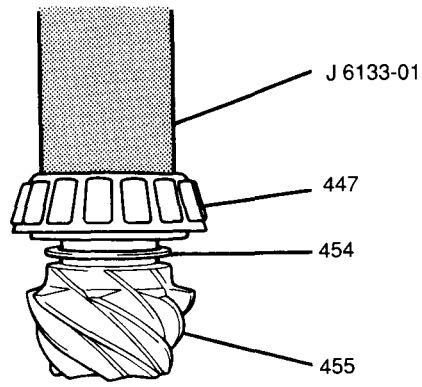

447 INNER PINION BEARING
454 PINION SELECTIVE SHIM
455 PINION GEAR

NC4076-4B-JT-RS

Figure 77 Installing Inner Pinion Bearing

3. New collapsible spacer on the pinion gear shaft with the short shank toward the pinion gear.
4. Outer pinion bearing and pinion gear into differential carrier (Figure 78).

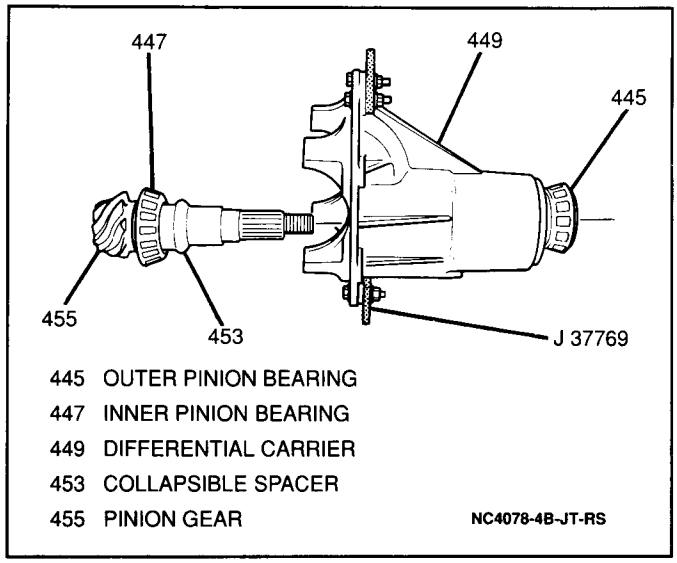

Figure 78 Installing Pinion Gear and Outer Pinion Bearing

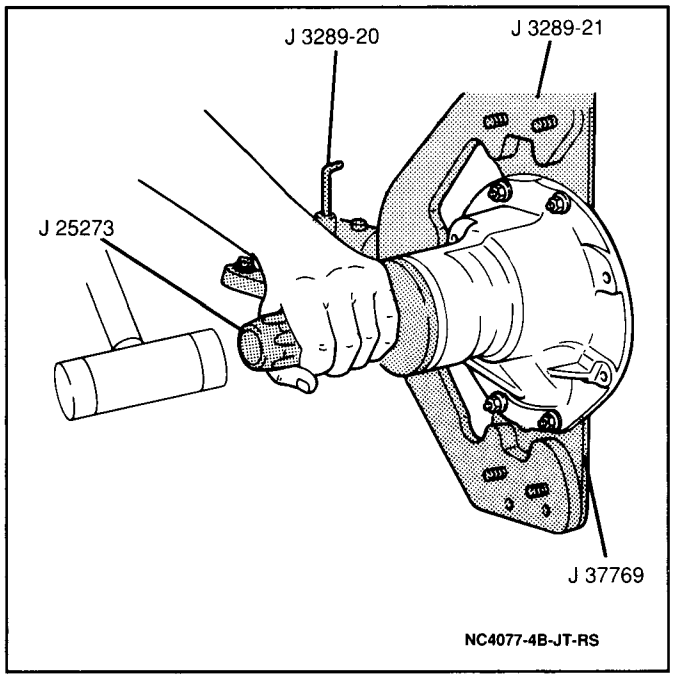

Figure 79 Installing Pinion Oil Seal

5. New pinion oil seal into differential carrier using a J 25273 (Figure 79).
- Apply wheel bearing lubricant GM P/N 1051344, or equivalent to the new pinion oil seal lip.
6. Pinion flange onto pinion gear; secure with pinion flange nut. Do not tighten fully.

Important

- Use caution not to overtighten the pinion flange nut when adjusting bearing preload. Tighten the pinion flange nut gradually while taking frequent pinion bearing preload measurements with a torque wrench. If the pinion flange nut is overtightened, the collapsible spacer will crush requiring a new collapsible spacer before pinion bearing preload can be properly adjusted.

Adjust

Tool Required:
J 8614-01 Flange Holder

- Pinion bearing preload using a J 8614-01 to hold the pinion flange stationary while tightening the pinion flange nut. Tighten the nut gradually in increments of 5 N·m (44 lb.in.). Between each increment of tightening, remove the J 8614-01, rotate the pinion gear 5 revolutions in order to ensure pinion bearing seating and measure pinion bearing preload.

Measure

- Pinion bearing preload using a torque wrench. The pinion gear should require 1.2 N·m (11 lb.in.) of torque in order to rotate. If pinion bearing preload is less than specified, repeat the adjustment procedure until proper pinion bearing preload has been attained (Figure 80).

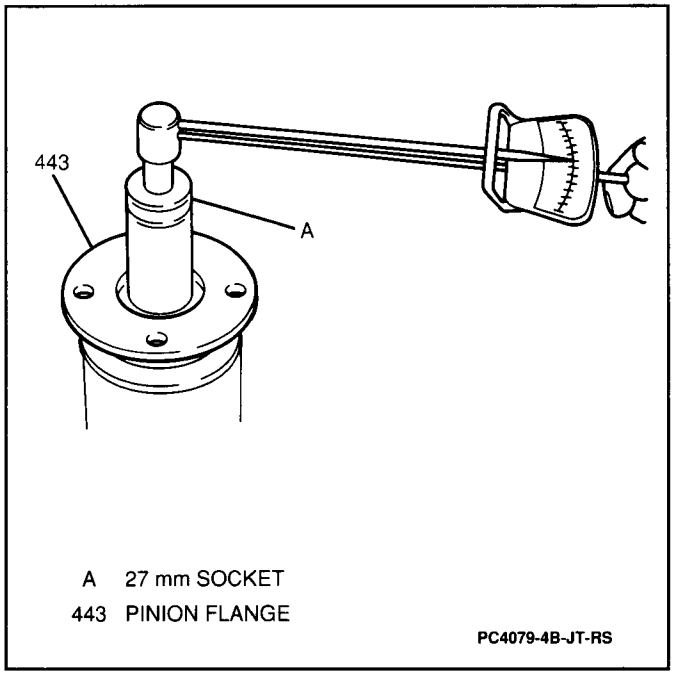

Figure 80 Measuring Pinion Bearing Preload

- Stake the pinion flange nut.
7. Differential side bearing races onto the differential side bearings.

8. Differential assembly into the differential carrier (Figure 81).

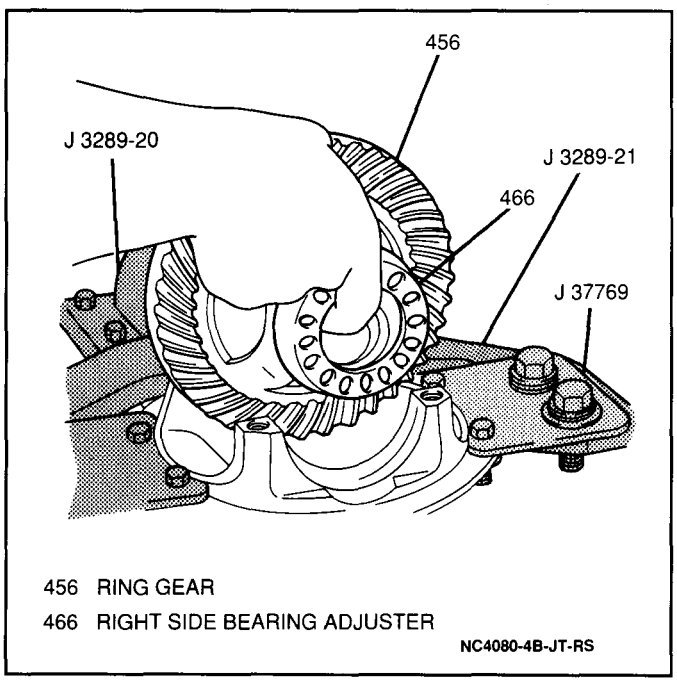

Figure 81 Installing Differential Assembly Into Differential Carrier

9. Both side bearing adjusters into differential carrier (Figure 80).
10. Both side bearing caps onto differential carrier; secure with four side bearing cap bolts.

Important

- Make sure the right and left side bearing caps are in their correct positions according to the marks scribed during disassembly. The left side bearing cap is on the ring gear side of the carrier. The right side bearing cap is on the Pinion side of the carrier.

Tighten

- Differential side bearing cap bolts to 40 N·m (30 lb.ft.).

Side Bearing Preload and Backlash Adjustment Procedure

Side bearing preload is necessary to maintain the correct bearing pressure on both sides of the differential case so that the differential case will turn evenly at all speeds. Side bearing preload is measured by the distance between the side bearing caps or case spread. Once the differential side bearing preload has been adjusted, it must be maintained throughout the differential backlash adjustment procedure.

Setting differential backlash is very important to the service life of the ring and pinion gears. Setting differential backlash determines the amount of depth at which the ring gear will contact the pinion gear. This determines the distance of the pinion gear teeth from the drive side and the coast side of the ring gear teeth. The deeper the gears mesh, the less amount of backlash. The more shallow the mesh, the more backlash is created. This adjustment is vital for correct differential operation.

Side Bearing Preload Adjustment Procedure

Figures 82 and 83

Tools Required:
J 8001 Dial Indicator Set
J 37760 Spanner Wrench

1. Loosen the right differential side bearing adjuster using a J 37760 until it no longer makes contact with the right differential side bearing race (Figure 82).

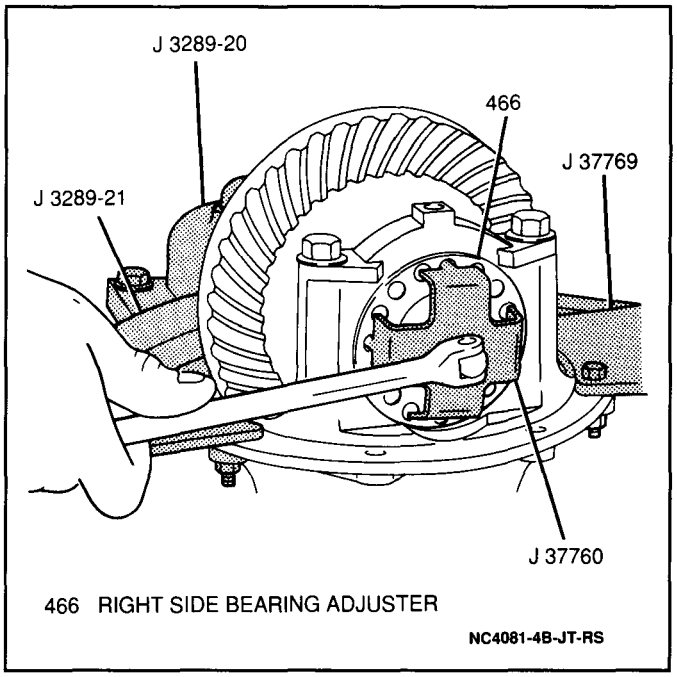

Figure 82 Loosening Right Side Bearing Adjuster

2. Tighten the left differential side bearing adjuster using a J 37760 until the ring gear is fully engaged with the pinion gear (0.000 backlash).

Inspect

1. The right adjuster making sure it is not making contact with the right side bearing race.
2. Pinion gear for binding by grasping the pinion flange and rotating the pinion gear several times.

3. Install a J 8001 on the differential carrier between the center of each side bearing cap to measure case spread (Figure 82).

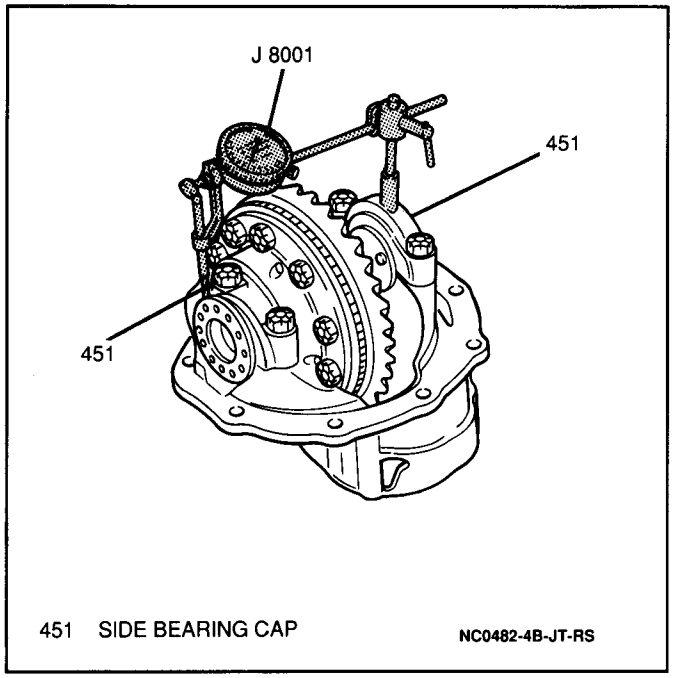

Figure 83 Measuring Case Spread Between Side Bearing Caps

4. Tighten the right adjuster using a J 37760 until the adjuster makes contact with the right side bearing race.
5. Rotate the J 8001 adjustable face until indicator needle reads 0.

Adjust

- Differential side bearing preload by tightening the right adjuster using a J 37760 until the J 8001 reads 0.0508 to 0.1524 mm (0.002 to 0.006-inch). This specification indicates the amount of case spread between the centers of both side bearing caps.

Backlash Adjustment Procedure

Figures 84 and 85

Tools Required:
J 8001 Dial Indicator Set
J 37760 Spanner Wrench

1. Install a J 8001 to the differential carrier with the dial indicator plunger against a ring gear tooth (Figure 84).

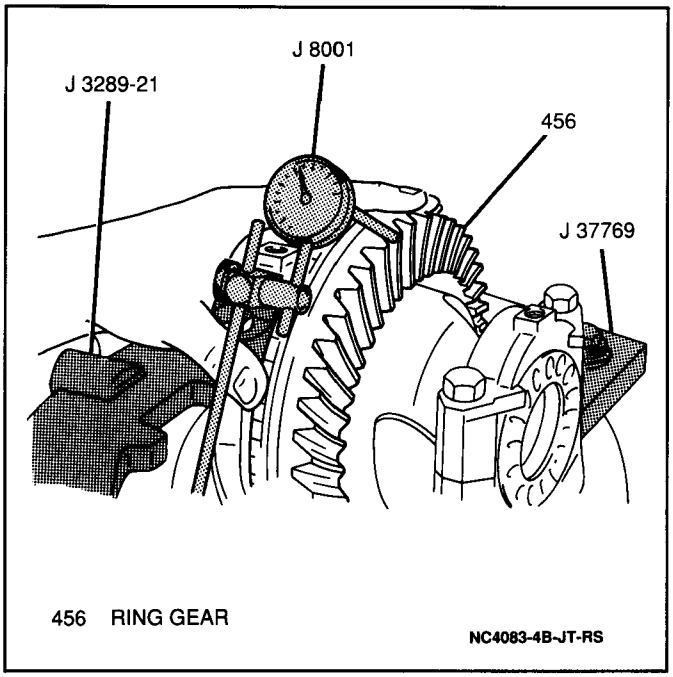

Figure 84 Installing Dial Indicator

2. While holding the pinion gear stationary, move the ring gear back and forth as far as it will travel without turning the pinion gear.
3. Observe the J 8001 while moving the ring gear as described in step 2. Differential backlash should be within 0.203 to 0.381 mm (0.008 to 0.015-inch). If differential backlash is above specification, loosen the right adjuster approximately 1/4 turn and tighten the left adjuster 1/4 turn using the J 37760 (Figure 85). This will move the ring gear closer to the pinion gear causing a tighter mesh and less backlash. If differential backlash below specification, loosen the left adjuster 1/4 turn and tighten the right adjuster 1/4 turn using the J 37760. This will move the ring gear away from the pinion gear causing a looser mesh and more backlash. Use this procedure until the most accurate differential backlash is obtained.

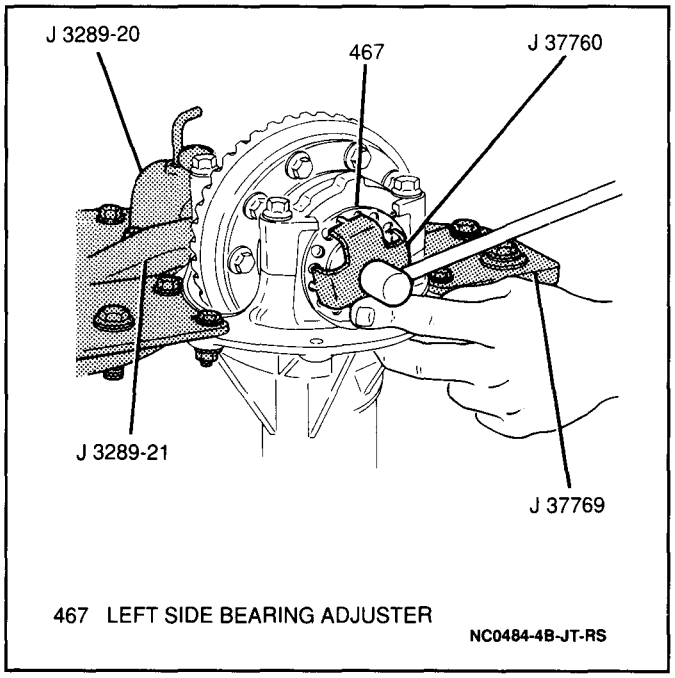

Figure 85 Adjusting Differential Backlash

Important

- In order to preserve differential side bearing preload, any time a side bearing adjuster is loosened, the other adjuster MUST be tightened the same amount. The last motion of this adjustment must be in a tightening direction.

Tighten

- Differential side bearing cap bolts to 100 N·m (72 lb.ft.).

4. Install both side bearing lock plates; secure with two bolts.

Tighten

- Both side bearing lock plate bolts to 14 N·m (10 lb.ft.).

Ring and Pinion Contact Pattern Checking Procedure

Figures 86, 87 and 88

1. Apply a light coating of gear marking compound GM P/N 1052351, or equivalent, to all ring gear teeth not making contact with the pinion gear (Figure 86).

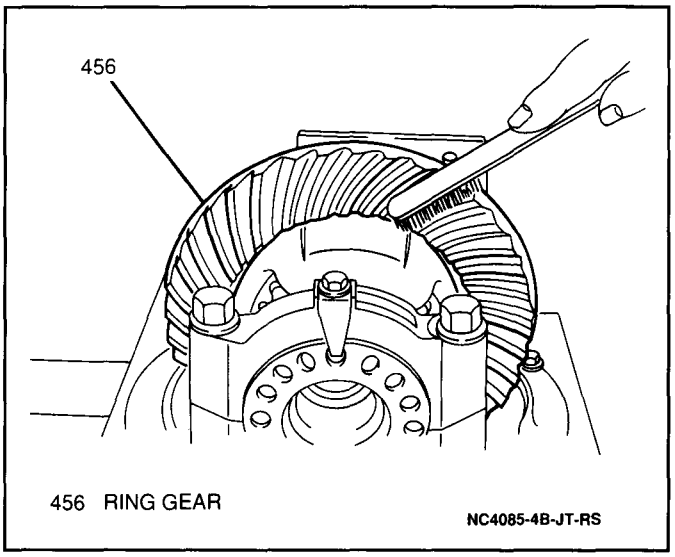

Figure 86 Applying Gear Marking Compound

2. Insert a standard drift punch between the ring gear and the differential carrier to bind the ring gear and simulate a drag.
3. Using a wrench, slowly and evenly turn the pinion gear until the ring gear has made one complete revolution. Because of the drag simulated on the ring gear, this will produce a contact pattern on the drive side of the ring gear (pinion gear driving ring gear).

Important

- In order to ensure an accurate gear contact pattern, make sure the ring gear turns one revolution only.

4. Turn the pinion gear in the opposite direction with drag simulated on the ring gear and a contact pattern on the coast side of the ring gear (ring gear driving pinion gear).

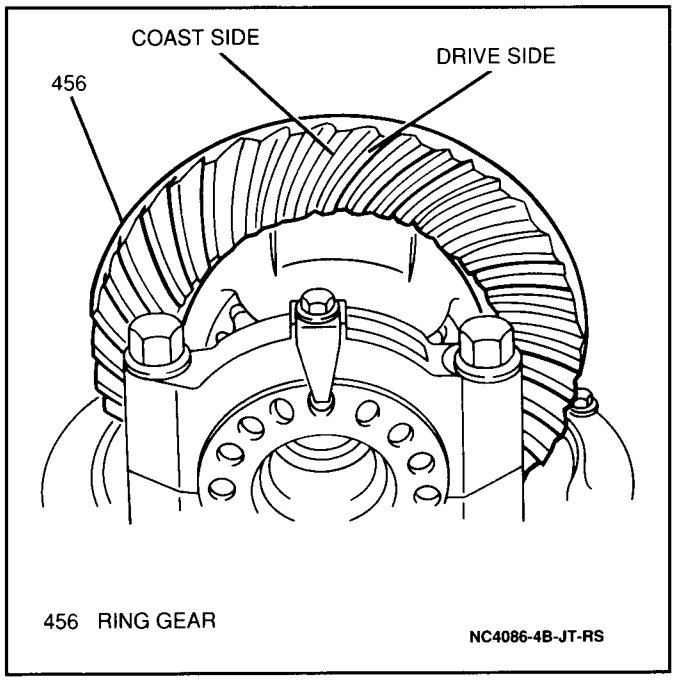

Figure 87 Checking Gear Contact Pattern

The drive side of the ring gear tooth is convex and the coast side of the ring gear tooth is concave (Figure 87). The contact pattern area should be even around the ring gear. Uneven contact around the ring gear indicates excessive ring gear runout. The drive pattern should be centrally located between the top and bottom of the ring gear tooth. Under an increased load, the pattern spreads out and tends to move toward the heel of the tooth. To compensate for this, the contact pattern can be somewhat closer to the toe. Under heavy loading conditions, uphill or rapid acceleration, the pattern may extend almost the full distance from toe to heel. Use the "Gear Contact Patterns" chart to determine if a correct contact pattern exists (Figure 88). If excessive contact pattern error is present with proper backlash specification, check pinion for proper selective shim.

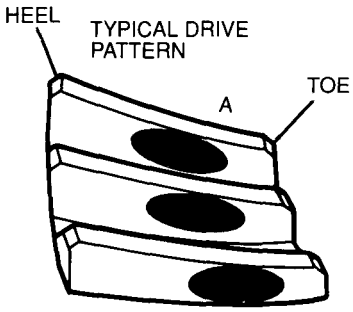

O.K. — DRIVE CONTACT

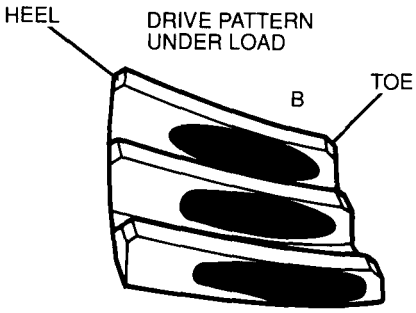

O.K. — DRIVE CONTACT

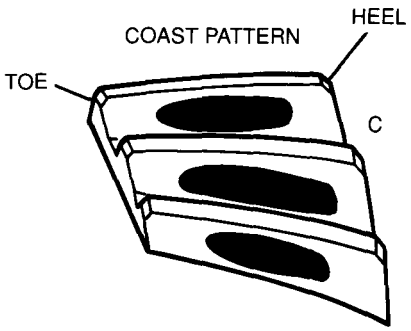

O.K. — COAST CONTACT

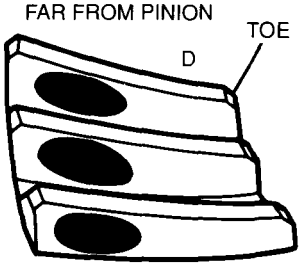

HEEL CONTACT
MOVE RING TOWARD PINION

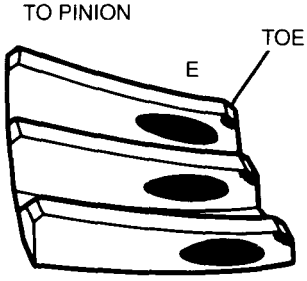

TOE CONTACT
MOVE RING AWAY FROM PINION

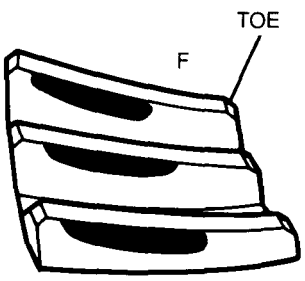

FACE CONTACT
MOVE PINION TOWARD RING

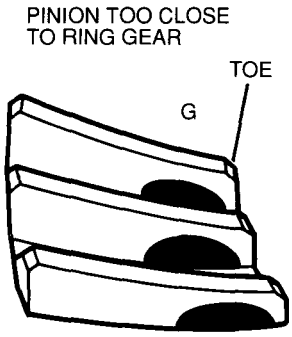

FLANK CONTACT
MOVE PINION AWAY FROM RING

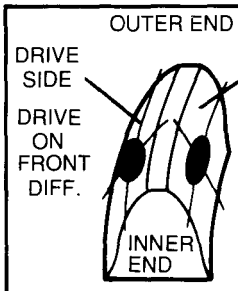	NORMAL CONTACT	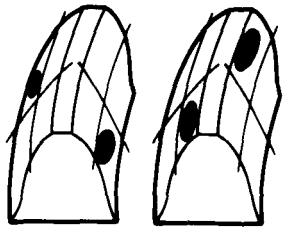	OFFSET COAST AND DRIVE PATTERN REPLACE DIFFERENTIAL CARRIER
	HIGH CONTACT PINION DEPTH IS TOO SHALLOW. INCREASE PINION SELECTIVE SHIM SIZE	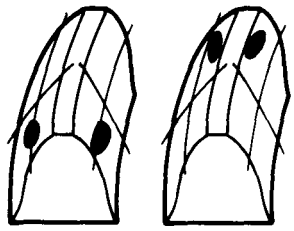	ERRATIC CONTACT PATTERNS 1. INSPECT PINION GEAR FOR PROPER SEATING 2. REPLACE RING AND PINION GEAR SET 3. REPLACE DIFFERENTIAL CARRIER
	LOW CONTACT PINION DEPTH IS TOO DEEP. DECREASE PINION SELECTIVE SHIM	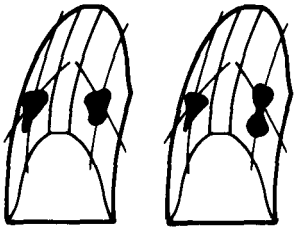	INSUFFICIENT CONTACT PATTERNS 1. REPLACE RING AND PINION GEAR SET 2. REPLACE DIFFERENTIAL CASE

NC0487-4B-JT-RS

Figure 88 Gear Contact Patterns

SPECIFICATIONS

FASTENER TORQUES

Rear Axle Housing Oil Level/Filler Plug	50 N·m (37 lb.ft.)
Rear Axle Housing Drain Plug	25 N·m (18 lb.ft.)
Rear Axle Shaft Retaining Nuts	23 N·m (17 lb.ft.)
Differential Carrier Nuts	55 N·m (41 lb.ft.)
RWAL Brake Speed Sensor Cover Bolts	15 N·m (11 lb.ft.)
RWAL Brake Speed Sensor Bolt	23 N·m (17 lb.ft.)
Rear Control Arm Ball Joint Boss Bolts	50 N·m (37 lb.ft.)
Rear Control Arm Through Bolts and Nuts	60 N·m (43 lb.ft.)
Rear Propeller Shaft Bolts and Nuts	50 N·m (37 lb.ft)
Rear Trailing Rod Through Bolts and Nut	90 N·m (66 lb.ft.)
Lower Shock Absorber Through Bolts and Nuts	90 N·m (66 lb.ft.)
Ring Gear Bolts	100 N·m (72 lb.ft.)
Differential Side Bearing Cap Bolts	100 N·m (72 lb.ft.)
Side Bearing Lock Plate Bolts	33 N·m (25 lb.ft.)

REAR AXLE SPECIFICATIONS

Rear Axle Shaft Length Right Rear Axle Shaft	722.5 mm (28.4 in.)
Left Rear Axle Shaft	679.5 mm (26.8 in.)
Differential Side Gear End Play	12 to 37 mm (0.005 to 0.014 in.)
Differential Side Gear Preload (Maximum)	2.4 N·m (21 lb.in.)
Differential Side Bearing Preload (Case Spread)	0.0508 to 0.1524 mm (0.002 to 0.006 in.)
Pinion Bearing Preload Starting Torque	1.2 N·m (11 lb.in.)
Differential Backlash	0.203 to 0.381 mm (0.008 to 0.015)

OIL CAPACITY (APPROXIMATE)

Rear Axle Housing Drain and Refill	2.2 liters (4.6 pts.)
Lubricant Recommended	Synthetic 75W-90 GL4 Lubricant GM P/N 12345871, or equivalent

SERVICE PARTS INFORMATION

Component Name Used in Section 4B	Reference Name in Service Parts Catalog	Group Number
Rear Axle Housing	Housing, Rear Axle	5.387
Rear Axle Housing Oil Level/Filler Plug	Plug, Rear Axle Oil Level	5.400
Rear Axle Housing Drain Plug	Plug, Rear Axle Oil Drain	5.400
Breather Hose	Hose, Rear Axle Breather (Short)	5.387
Breather Hose Clamp	Clamp, Rear Axle Breather Hose	5.387
Differential Carrier	Carrier ASM, Rear Axle Differential	5.505
Differential Carrier Nut	Nut, Rear Axle Carrier Mounting	5.398
Rear Axle Shaft	Shaft, Rear Axle	5.420
Rear Axle Shaft Bearing Retainer	Retainer, Rear Wheel Bearing Outer	5.001
Rear Axle Shaft Retaining Nuts	Nut, Rear Brake Mounting	5.002
Rear Axle Shaft Bearing	Bearing, Rear Wheel	5.855
Rear Axle Shaft Outer Oil Seal	Seal, Rear Axle Outer Oil	5.822
Rear Axle Bearing Retaining Ring	Ring, Rear Wheel Bearing Retainer	5.816
Rear Axle Inner Oil Seal	Seal, Rear Wheel Inner Oil	5.822
Rear Axle Oil Seal Protector	Cover, Rear Wheel Oil Seal	5.822
Rear Shock Absorber	Absorber ASM, Rear Suspension Shock	7.345
Rear Trailing Rod	Rod, Rear Suspension Trailing	5.415
Rear Wheel Speed Sensor Cover	Cover, Brake Antilock Sensor	4.710
Rear Wheel Speed Sensor Cover Bolt	Bolt, Brake Antilock Sensor Cover	4.710
Rear Wheel Speed Sensor	Sensor, Brake Antilock	4.710
Rear Wheel Speed Sensor Bolt	Bolt, Sensor	4.710
Pinion Flange Nut	Nut, Flange	5.595
Pinion Flange Washer	Washer, Flange	5.595
Pinion Flange	Flange, Universal Joint	5.545
Pinion Seal	Seal, Pinion Oil	5.387
Outer Pinion Bearing	Bearing, Pinion Front	5.447
Inner Pinion Bearing	Bearing, Pinion Rear	5.447

Differential Carrier	Carrier ASM, Differential Rear	5.505
Differential Carrier Nut	Nut, Carrier	5.398
Differential Side Bearing Cap Bolt	Bolt, Carrier Differential Front Cap	5.531
Collapsible Spacer	Spacer, Pinion.	5.453
Pinion Selective Shim	Shim, Rear Axle Drive Pinion	5.460
Pinion Gear	Gear Kit, Rear Axle Bevel Pinion	5.529
Ring Gear	Gear Kit, Rear Axle Bevel Pinion	5.529
Ring and Pinion Set	Gear Kit, Rear Axle Bevel Pinion	5.529
Right Differential Case	Case, Differential Right	5.510
Left Differential Case	Case, Differential Left	5.510
RWAL Exciter Ring	Ring, Exciter	5.510
Differential Side Bearing	Bearing, Differential Side	5.536
Differential Side Bearing Race	Bearing, Differential Side	5.536
Ring Gear Bolt	Bolt, Differential Case	5.531
Side Bearing Adjuster	Adjuster, Side Gear Bearing	5.537
Side Bearing Lock Plate	Plate, Differential Gear Bearing Lock	5.537
Side Bearing Lock Plate Bolt	Bolt, Side Gear Bearing Lock Plate	6.058
Differential Pinion Gear	Pinion, Rear Differential	5.526
Side Gear	Gear, Rear Differential Side	5.528
Side Gear Washer	Washer, Differential Side	5.543
Side Gear Spring Washer	Washer, Differential gear Spring	5.543
Differential Pinion Washer	Washer, Rear Differential Pinion	5.542
Pinion Cross Shaft (Short)	Shaft, Differential Pinion Cross	5.517
Pinion Cross Shaft (Long)	Shaft, Differential Pinion Cross	5.517
Cross Shaft Roll Pin	Pin, Differential Side Pinion Shaft	5.518
Cross Shaft Joint	Joint, Differential Pinion Shaft	5.517

SPECIAL TOOLS

1
J 37759

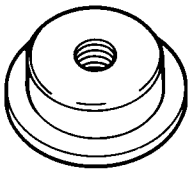

4
J 35138

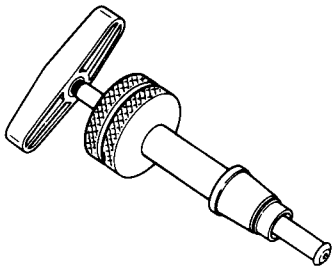

7
J 8001

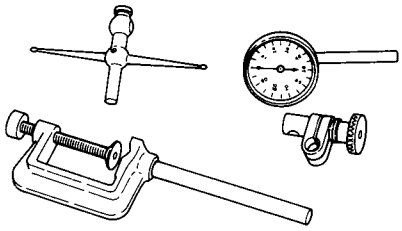

2
J 21777-102

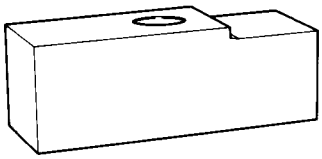

5
J 21777-101

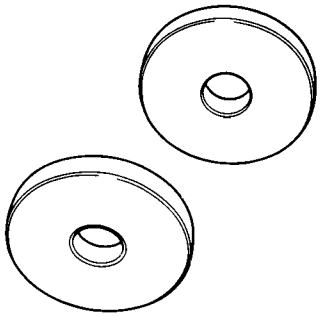

8
J 23597-1

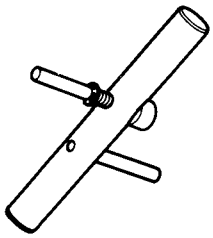

3
J 23597-12

6
J 21777-42

9
J 21777-43

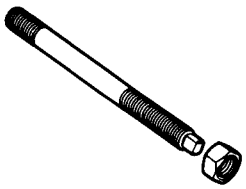

1 PINION INNER BEARING RACE INSTALLER
2 GAGE PLATE
3 PILOT WASHER
4 SIDE GEAR THRUST PLAY TOOL
5 SIDE BEARING DISCS
6 PILOT WASHER
7 DIAL INDICATOR SET
8 ARBOR
9 STUD ASSEMBLY

NC0488-4B-JT-RS

10
J 3289-20

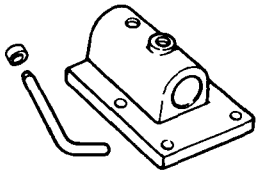

13
J 3289-21

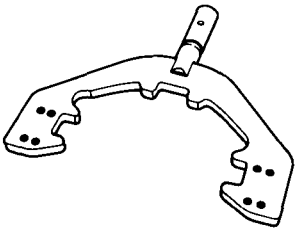

16
J 37769

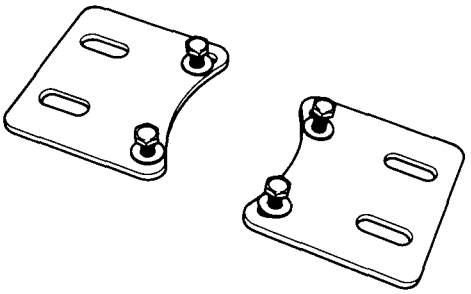

11
J 8614-01

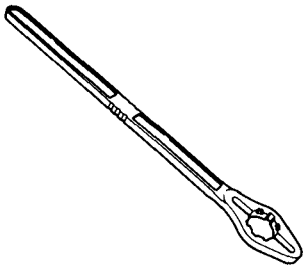

14
J 22912-01

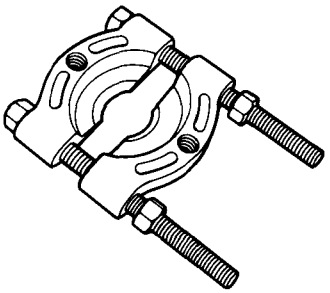

17
J 22888-D

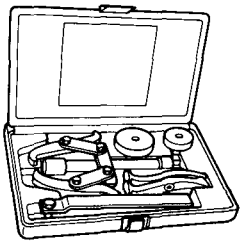

12
J 38891

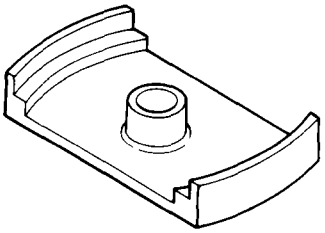

15
J 8092

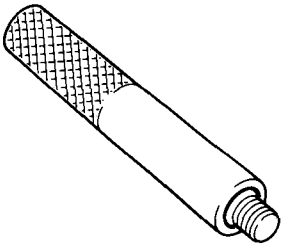

18
J 25273

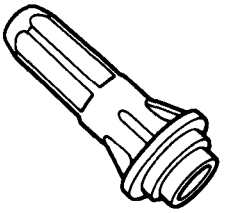

10 HOLDING FIXTURE BENCH MOUNT
11 FLANGE HOLDER
12 WHEEL SPEED SENSOR RING INSTALLER
13 DIFFERENTIAL HOLDING FIXTURE
14 REAR BEARING REMOVER
15 DRIVER HANDLE
16 DIFFERENTIAL HOLDING FIXTURE ADAPTERS
17 SIDE BEARING REMOVER
18 PINION SEAL INSTALLER

NC0489-4B-JT-RS

19
J 23907

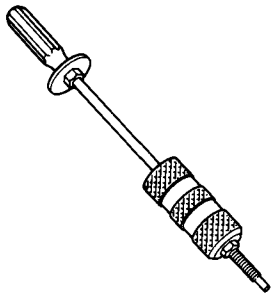

21
J 26941

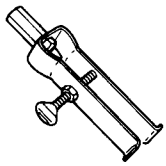

23
J 6133-01

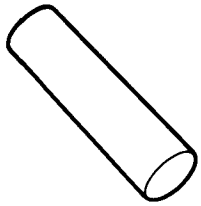

20
J 38890

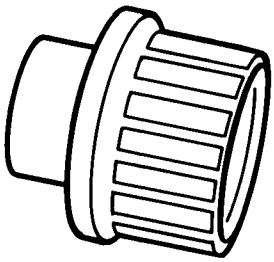

22
J 37760

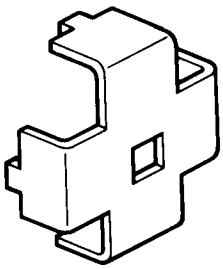

24
J 8107-4

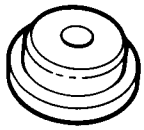

25
J 37758

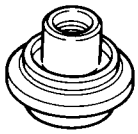

19 SLIDE HAMMER
20 DIFFERENTIAL TORQUE CHECK TOOL
21 AXLE SHAFT SEAL REMOVER
22 SPANNER WRENCH
23 PINION BEARING INSTALLER
24 DIFFERENTIAL SIDE BEARING REMOVER PLUG
25 PINION OUTER RACE INSTALLER

NC0490-4B-JT-RS

26
J 2619-01

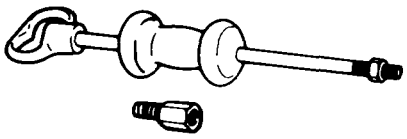

28
J 37771

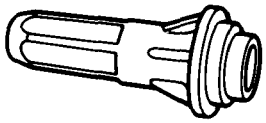

27
J 37781

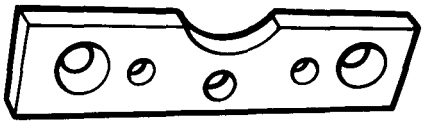

29
J 29039

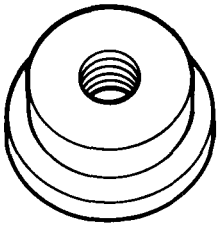

26 SLIDE HAMMER

27 REAR AXLE SHAFT AND BRAKE DRUM REMOVER

28 REAR AXLE BEARING RETAINER SEAL INSTALLER

29 AXLE SHAFT INNER OIL SEAL INSTALLER

NC0491-4B-JT-RS

SECTION 4C

FRONT AXLE

NOTICE: When fasteners are removed, always reinstall them at the same location from which they were removed. If a fastener needs to be replaced, use the correct part number fastener for that application. If the correct part number fastener is not available, a fastener of equal size and strength (or stronger) may be used. Fasteners that are not reused, and those requiring thread-locking compound, will be called out. The correct torque values must be used when installing fasteners that require them. If the above procedures are not followed, parts or system damage could result.

CONTENTS

General Description 4C-2
Front Axle Assembly 4C-2
Drive Axle Shaft 4C-3
Differential Assembly 4C-4
Front Axle Operation 4C-4
Diagnosis 4C-4
Preliminary Checks 4C-4
Road Test 4C-4
Determining the Type of Noise 4C-4
Road Noise 4C-4
Tire Noise 4C-5
Engine and Transmission Noise 4C-5
Brake Noise 4C-5
Body Boom Noise or Vibration 4C-5
Front Axle Shaft Noise 4C-5
Side Gear and Differential Pinion Gear Noise 4C-6
Pinion Bearing Noise 4C-6
Side Bearing Noise 4C-6
Ring and Pinion Gear Noise 4C-6
On Vehicle Service 4C-9
Checking Front Axle Oil Level 4C-9
Front Axle Oil Change Procedure 4C-9
Right Drive Axle Shaft 4C-9
Left Drive Axle Shaft 4C-11
Left Inner Axle Shaft, Bearing and Oil Seal 4C-11
Right Drive Axle Shaft Oil Seal 4C-14
Front Axle Housing 4C-14
Differential Carrier 4C-17
Unit Repair 4C-19
Drive Axle Shaft 4C-19
Differential Carrier Disassembly 4C-22
Differential Carrier Assembly 4C-27
Setting Pinion Depth 4C-30
Side Bearing Preload and Backlash Adjustment 4C-36
Specifications 4C-41
Fastener Torques 4C-41
Front Axle Specifications 4C-41
Front Axle Housing Oil Capacity 4C-41
Service Parts Information 4C-41
Special Tools 4C-43

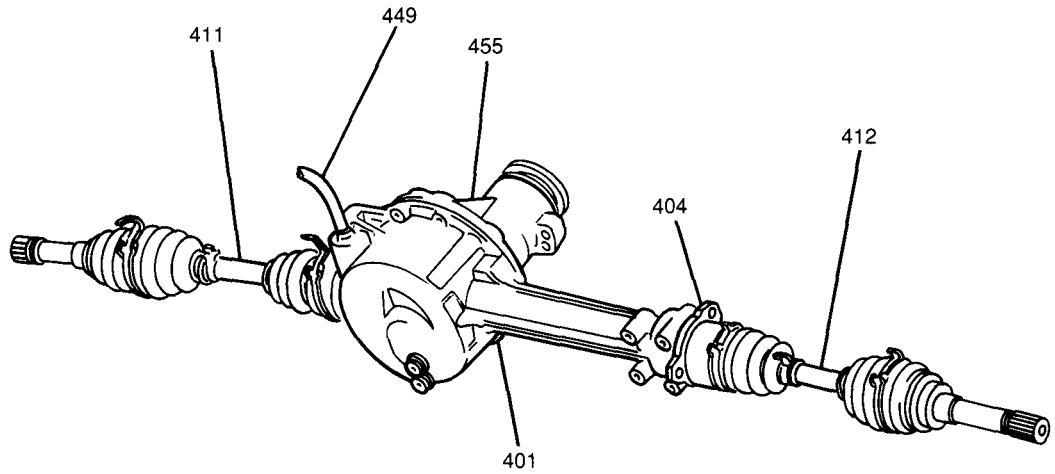

401 FRONT AXLE HOUSING
404 LEFT INNER AXLE SHAFT
411 RIGHT DRIVE AXLE SHAFT
412 LEFT DRIVE AXLE SHAFT
449 FRONT AXLE HOUSING BREATHER HOSE
455 DIFFERENTIAL CARRIER

NC4001-4C-JT-RS

Figure 1 Front Axle Assembly

GENERAL DESCRIPTION

FRONT AXLE ASSEMBLY

Figure 1

The front axle assembly consists of a front axle housing, differential carrier, a left inner axle shaft, and the left and right drive axle shafts (Figure 1). The front axle housing is mounted to the vehicle frame. The differential carrier is mounted in the right side of the front axle housing. The front propeller shaft turns the differential assembly which transfers engine power to the right and left drive axle shafts. The front axle housing is sealed and contains a synthetic gear lubricant which lubricates the differential assembly, left inner axle shaft and its support bearing. The front axle housing is also vented to prevent excessive heat buildup.

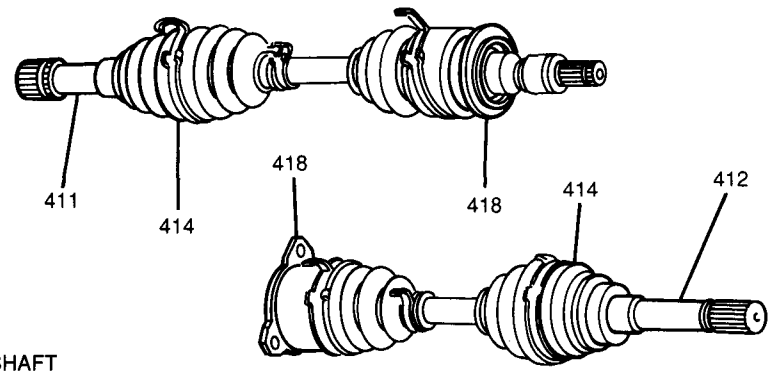

411 RIGHT DRIVE AXLE SHAFT
412 LEFT DRIVE AXLE SHAFT
414 WHEEL-SIDE JOINT
418 DIFFERENTIAL-SIDE JOINT HOUSING

NC4003-4C-JT-RS

Figure 2 Drive Axle Shafts

DRIVE AXLE SHAFT

Figure 2

The front drive axle shaft is a flexible assembly consisting of an inner and outer constant velocity (CV) joint joined by an axle shaft. The inner or differential-side CV joint is a "double offset" design which is completely flexible and has the capability of an in and out movement. The outer or wheel-side CV joint is a ball joint design that is completely flexible, but cannot move in and out (Figure 2).

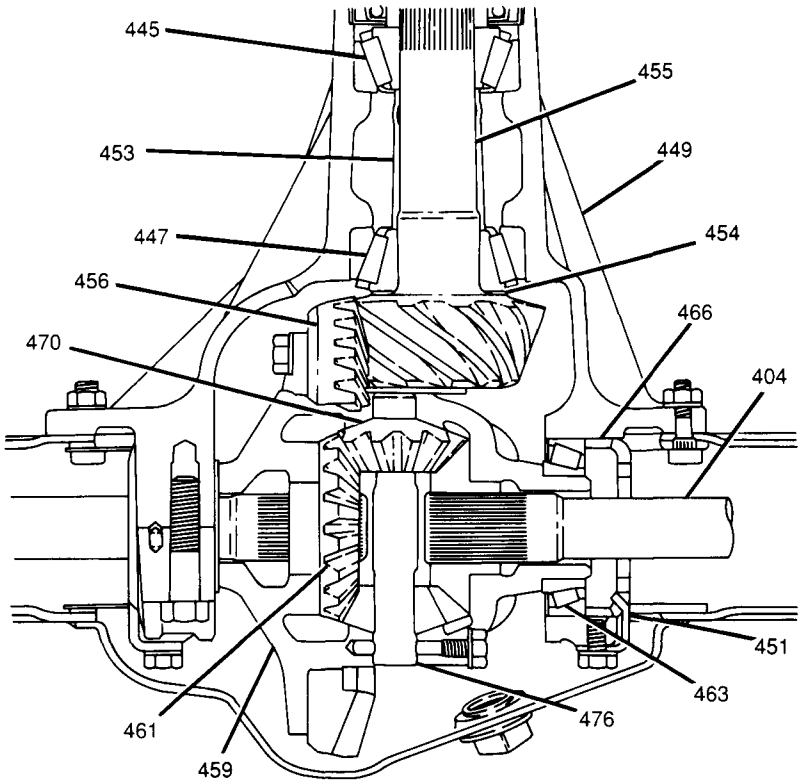

404 REAR AXLE SHAFT
445 OUTER PINION BEARING
447 INNER PINION BEARING
449 DIFFERENTIAL CARRIER
451 SIDE BEARING CAP
453 COLLAPSIBLE SPACER
454 PINION SELECTIVE SHIM
455 PINION GEAR
456 RING GEAR
459 LEFT DIFFERENTIAL CASE
461 SIDE GEAR
463 SIDE BEARING
466 RIGHT SIDE BEARING ADJUSTER
470 DIFFERENTIAL PINION GEAR
476 PINION CROSS SHAFT (LONG)

NC4002-4B-JT-RS

Figure 3 Typical Differential

DIFFERENTIAL ASSEMBLY

Figure 3

The differential assembly utilizes a hypoid beveled ring and pinion gear set. It consists of a ring gear which is mounted to the differential case, a pinion gear which is mounted in the differential carrier, and a set of four gears mounted inside the differential case (Figure 2). Two of these gears are known as side gears and the other two are known as differential pinion gears. The right side gear is splined to the right drive axle shaft, and the left side gear is splined to the left inner axle shaft.

At the end of the left inner axle shaft is a flange which bolts to a similar flange at the differential-side joint of the left drive axle shaft. Because these shafts are splined to the differential side gears, the right drive axle and the left inner axle shaft rotate as their respective side gear rotates. The differential pinion gears are mounted on a pinion shaft and are free to rotate on it. The pinion shaft is fitted into bores in the differential case and is held in place by a roll pin. The differential case is mounted in the differential carrier where the pinion gear drives the ring gear, differential case, and its side and differential pinion gears.

FRONT AXLE OPERATION

When the transfer case is placed in "4WH" or "4WL," engine torque is provided by the front propeller shaft which is bolted to the pinion flange by a universal joint. The pinion gear turns the ring gear and differential case which causes the side gears to rotate with the case. This causes the left inner axle shaft and the right drive axle shaft to rotate and drive the front wheels. When both wheels have equal traction, the differential pinion gears do not rotate on the pinion shaft. This is due to an input force which is equally divided between the side gears. In other words, the differential pinion gears revolve with the pinion shaft, but do not rotate around it. When the vehicle turns a corner, the outer drive axle must turn faster than the inner drive axle. When the inner drive axle turns slower than the outer, it slows its side gear. The differential pinion gears will roll around the slower drive axle side gear providing torque to the outer drive axle. When the transfer case is placed in "2WH" or "N," the front axle is disengaged and the front propeller shaft as well as all front axle components remain stationary while the front wheels are free to rotate.

DIAGNOSIS

The most essential part of axle service as with any mechanical repair is proper diagnosis of the problem. In axle work, one of the most difficult areas to diagnose is noise. Because the front drive axle shafts and differential turn in four-wheel drive only, all road tests and checks should be performed in and out of four-wheel drive to eliminate the possibility of the problem originating in the transfer case or rear axle. Because the front drive axle shafts are flexible assemblies, most failures occurring with a drive axle shaft will produce a noise with a rotational characteristic. In other words, a noise that is pronounced with a "click" or "knock" on every drive axle shaft rotation. These noises can usually be distinguished from differential noises because they can occur at lower speeds or around turns. Differential gear or bearing noises normally occur at higher speeds or at one specific speed.

Any gear driven gear unit, especially a gear driven axle where engine torque occurs at a 90 degree angle, produces a certain amount of noise. Therefore, an interpretation should be made for each vehicle to determine whether a noise is normal or if a problem actually exists. One way of determining this is road testing an identical vehicle with the same options and under the same conditions. If the same amount of noise is audible at the same speed and under the same conditions, it must be deemed commercially acceptable since it is unlikely that the exact same problem exists in both vehicles. Therefore, a normal amount of noise must be expected and cannot be eliminated by conventional repairs or adjustments. However, if a noise proves to be extremely loud or unusual, it should be investigated. This can be accomplished by a road test and a systematic check of the components associated with the front axle to isolate the noise.

PRELIMINARY CHECKS

In order to perform an accurate road test, it is important that certain checks be performed to eliminate other possible problems that may point to the front axle. Make sure to check the following items before performing a road test.

Inspect

1. Tires for correct inflation pressure. Refer to SECTION 3E.
2. Front axle housing for correct oil level. Refer to "Checking Front Axle Oil Level" later in this section.
3. Transfer case for correct oil level. Refer to SECTION 7D.
4. Wheel nuts for correct torque specification. Refer to SECTION 3E.
5. Undercarriage for loose attaching front axle parts which may cause noise. Refer to SECTION 10-3.
6. Front suspension for any loose or worn components. Refer to SECTION 3C.

ROAD TEST

When road testing a vehicle, a smooth asphalt road surface is preferable because it dampens a high degree of road noise. Road test the vehicle to verify the problem and the speed and/or rpm at which the it occurs. Once the problem has been verified, duplicate the noise under varying road conditions to eliminate the possibility of road noise. Once the noise and the conditions under which it exists have been verified, the type of noise and its location must be identified.

DETERMINING THE TYPE OF NOISE

Many noises thought to be coming from the front axle may actually be originating from other sources such as tires, road surfaces, wheel bearings, engine, transmission or body. Because noise is a major factor in determining or diagnosing a front axle problem, a thorough and careful check should be made to determine the source of the noise before proceeding with front axle repair.

Road Noise

Some road surfaces such as brick or rough surfaced concrete, cause noise which may be mistaken for tire or front axle noise. Driving the vehicle on varying types of road surfaces such as asphalt or dirt will help in determining whether road surface is the cause of the noise. Noise caused by road surfaces will be the same in drive, coast, two-wheel or four-wheel drive.

Tire Noise

Tire noise can easily be mistaken for front axle noise. Because noise can transmit or dissipate through the vehicle body, noise coming from the front tires can also be mistaken for a front axle noise. Tires showing uneven wear or under inflation, are usually noisy and may produce vibrations which can appear at other places on the vehicle. This is particularly true with low tire pressure. For tire inspection procedures, refer to SECTION 3.

Engine and Transmission Noise

The engine or transmission may sometimes produce noises which may be mistaken for front axle noise. To determine which unit is actually causing the noise, record the speed, rpm and other conditions during road testing, at which the noise is most pronounced. Then stop the vehicle in a quiet place to avoid interference with other extraneous noises. With the transmission in neutral, Slowly run the engine speed up and down to the engine speeds that correspond with the vehicle speed at which the noise is most pronounced. If the noise is produced with the vehicle at a standstill, the problem lies in the engine or transmission and not the front axle.

Brake Noise

Brake noises caused by the front or rear brakes are rotational once every wheel revolution. During a road test, duplicate the conditions under which the noise is most pronounced and gently apply the brakes. If the noise immediately appears or disappears when lightly depressing the brake pedal, the noise may be caused by an out of round brake rotor or drum. For brake diagnostic and repair procedures, refer to SECTION 5.

Body Boom or Vibration

Objectionable "body boom" noise or vibration usually occurs at 55 to 65 mph (90 to 100 km/h) and can be caused by an out of balance propeller shaft. Excessive looseness or wear at the propeller shaft sliding yoke splines may also cause a propeller shaft to be unbalanced. If a propeller shaft is suspected of being out of balance, refer to SECTION 4A for propeller shaft inspection procedures.

Front Axle Shaft Noise

If all indications point to a front axle noise after making a comprehensive check of the vehicle, it is necessary to determine what component of the front axle the noise is occurring. Front axle noises usually occur from one of two places: drive axle shafts and differential gear or bearing noise. Refer to the "Front Drive Axle Shaft Noise Diagnosis Chart" to determine possible causes of front drive axle shaft conditions (Figure 4).

CONDITION	INSPECT COMPONENT	FOR POSSIBLE CAUSE
CLICKING NOISE ON TURNS	OUTER CV JOINT	WEAR OR DAMAGE
"CLUNK" NOISE WHEN ACCELERATING FROM A COAST	INNER CV JOINT	WEAR OR DAMAGE LOOSE BOLTS AT LEFT INNER AXLE SHAFT
SHUDDER OR VIBRATION DURING ACCELERATION	VEHICLE HEIGHT INNER OR OUTER CV JOINTS INNER CV JOINT SPIDER	EXCESSIVE JOINT ANGLE WEAR OR DAMAGE STICKING OR SEIZED
VIBRATION AT HIGHWAY SPEEDS	FRONT TIRES AND WHEELS FRONT SUSPENSION	UNDER INFLATION OR IMBALANCE TOE MISADJUSTED

NC4004-4C-JT-RS

Figure 4 Front Drive Axle Shaft Diagnosis Chart

Side Gear and Differential Pinion Gear Noise

Side gears and differential pinion gears rarely cause noise. This is due mainly to their lack of movement during straight ahead driving. Noise produced by these gears will be most pronounced on turns.

Pinion Bearing Noise

Pinion bearing failures can be distinguished because they rotate at a higher rate of speed than the differential side bearings or drive axles. Rough or excessively worn pinion bearings produce a continuous low pitched whirring or scraping noise on low speed acceleration from a stop.

Side Bearing Noise

Side bearings, when worn, produce a constant rough noise at a lower pitch than with pinion bearing noise. Side bearing noise may also fluctuate with drive axle shaft noise.

Ring and Pinion Gear Noise

There are two types of gear noise. One type is produced by broken, bent, overheated or forcibly damaged gear teeth. This noise is usually quite audible through all speed ranges and can easily be diagnosed upon visual inspection. For example, hypoid gear tooth scoring generally results from the following:

- Insufficient lubricant
- Improper or contaminated lubricant
- Insufficient gear backlash
- Improper pinion depth
- Improper ring and pinion gear alignment
- Improper pinion bearing preload

The scoring will progressively lead to complete erosion of the gear teeth and eventually, a fracture will result if the initial scoring condition is not corrected. Another common cause of hypoid gear tooth fracturing is extended overloading or shock loading – causing the differential pinion gears and shaft to seize. This can result

from lubrication breakdown caused by excessive wheel spin. The second type of gear noise pertains to the contact pattern of the ring and pinion gear teeth. This form of abnormal gear noise can be recognized because it produces a cycling pitch (whine) and will be very pronounced at the speed range in which it occurs. Because the front differential is driven (powered) in four-wheel drive only, this noise can only be duplicated in four-wheel drive. Gear noises in the front differential can occur under one or all of the following conditions:

"Drive"— is under acceleration or heavy pull. The pinion gear riding on the drive side of the ring gear.

"Float"— is only enough throttle to keep the engine from pulling the vehicle (between "Drive" and "Coast"). The vehicle slows down gradually with the engine pulling only slightly.

"Coast"— is with the throttle closed and vehicle in gear. The pinion gear riding on the coast side of the ring gear.

Gear noises tend to peak at a narrow speed range or ranges and tends to remain constant in pitch. Bearing noise will vary in pitch with vehicle speeds. For further diagnosis, refer to "Front Differential Diagnosis Chart" for front differential diagnosis (Figure 5).

CONDITION	INSPECT COMPONENT	FOR POSSIBLE CAUSE
NOISE CHANGES ON A DIFFERENT TYPE OF ROAD	WHEELS AND TIRES	IMBALANCE OR IMPROPER INFLATION
NOISE TONE IS LOWERED WITH VEHICLE SPEED	WHEELS AND TIRES	IMBALANCE OR IMPROPER INFLATION
CLUNK NOISE ON ACCELERATION OR DECELERATION	PINION SHAFT OR PINION BEARINGS	WEAR OR DAMAGE
	DIFFERENTIAL CASE SIDE GEAR HUB	WORN OVERSIZE OR DAMAGED
	UNIVERSAL JOINTS	WEAR OR DAMAGE
CONTINUOUS LOW PITCHED WHIRRING OR SCRAPING NOISE AT LOW SPEED	PINION BEARINGS	WEAR OR DAMAGE
NOISE MOST PRONOUNCED ON TURNS	DIFFERENTIAL SIDE GEARS AND PINION GEARS	WEAR OR DAMAGE EXCESSIVE BACKLASH
NOISE IS THE SAME IN DRIVE OR COAST	WHEELS AND TIRES	IMBALANCE OR IMPROPER INFLATION
	FRONT WHEEL BEARINGS	WEAR OR DAMAGE
	PROPELLER SHAFT	EXCESSIVE DRIVE LINE ANGLE
DRIVE NOISE, COAST NOISE OR FLOAT NOISE	RING AND PINION GEARS	INCORRECT BACKLASH
		INCORRECT PINION DEPTH
		WEAR OR DAMAGE

NC4005-4C-JT-RS

Figure 5 Front Differential Diagnosis Chart

NOTICE: Driving a vehicle with the transfer case in "4H" or "4L" selections for long periods of time on dry or wet pavement can cause excessive wear and shorten the service life of the transfer case and front differential components.

ON-VEHICLE SERVICE

CHECKING FRONT AXLE OIL LEVEL

Figure 6

1. Raise and suitably support vehicle. Refer to SECTION 0A.
2. Remove four bolts and front skid plate from vehicle (if equipped).
3. Remove front axle housing oil level/filler plug from front axle housing (Figure 6).

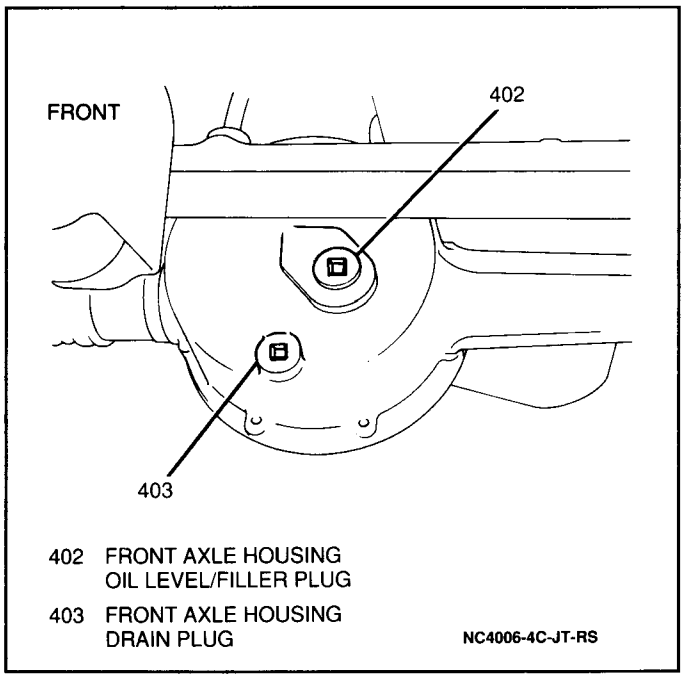

Figure 6 Front Axle Housing Oil Level/Filler and Drain Plug Locations

4. Inspect oil level. Oil level should be even with the bottom of the front axle housing oil level/filler plug hole. If oil level is low and no oil leaks exist, adjust oil level using synthetic 75W-90 GL4 lubricant GM P/N 12345871, or equivalent.
5. Install front axle housing oil level/filler plug into front axle housing.

   Tighten

   - Front axle housing oil level/filler plug to 45 N·m (33 lb.ft.).
6. Install front skid plate to vehicle; secure with four bolts (if equipped).

   Tighten

   - Front skid plate bolts to 54 N·m (40 lb.ft.).
7. Lower vehicle.

FRONT AXLE OIL CHANGE PROCEDURE

Figure 6

1. Raise and suitably support vehicle. Refer to SECTION 0A.
2. Remove four bolts and front skid plate from vehicle (if equipped).
3. Place a drain pan or suitable container under front axle housing.
4. Remove front axle housing oil level/filler plug from front axle housing (Figure 6).
5. Remove front axle housing drain plug from front axle housing and drain front axle oil (Figure 6).
6. Install front axle housing drain plug into front axle housing.

   Tighten

   - Front axle housing drain plug to 23 N·m (17 lb.ft.).
7. Refill front axle housing with approximately 1 liter (1.8 pts.) of synthetic 75W-90 GL4 lubricant GM P/N 12345871, or equivalent.
8. Install front axle housing oil level/filler plug into front axle housing.

   Tighten

   - Front axle housing oil level/filler plug to 45 N·m (33 lb.ft.).
9. Install front skid plate to vehicle; secure with four bolts (if equipped).

   Tighten

   - Front skid plate bolts to 54 N·m (40 lb.ft.).
10. Remove drain pan from under front axle housing.
11. Lower vehicle.

RIGHT DRIVE AXLE SHAFT

Figures 7 through 10

Remove or Disconnect

Tool Required:
J 37780 Axle Shaft Remover

- Raise and suitably support vehicle. Refer to SECTION 0A.

1. Four bolts and front skid plate from vehicle (if equipped).
2. Left front tire and wheel assembly. Refer to SECTION 3E.
3. Locking hub cap from locking hub cover by unscrewing locking hub cap counterclockwise (Figure 7).

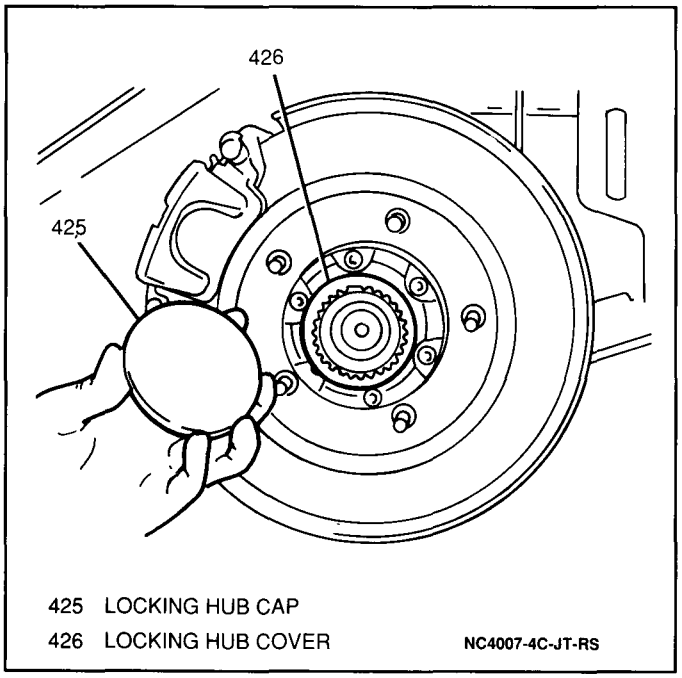

Figure 7 Removing Locking Hub Cap

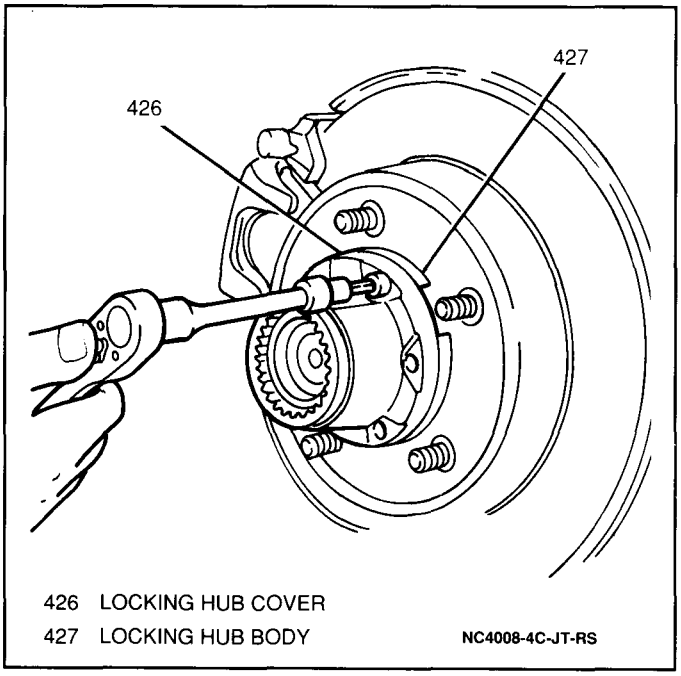

Figure 8 Removing Locking Hub Cover

4. Six Allen® head bolts and locking hub cover from locking hub body (Figure 8).
5. Drive axle shaft snap ring from end of drive axle shaft.
6. Drive axle shaft spindle washer from drive axle shaft.

- Support left front control arm with a hydraulic jack.

CAUTION: Coil spring is under extreme pressure. Make sure control arm is firmly supported with a hydraulic jack before removing lower ball joint bolts. After lower ball joint bolts have been removed, lower hydraulic jack slowly to relieve coil spring pressure. If this precaution is not observed, serious bodily injury may result.

7. Three nuts, three bolts and separate steering knuckle and lower ball joint from right front control arm.

- Slowly lower hydraulic jack until coil spring pressure is relieved.

8. Wheel-side joint of the right drive axle shaft from the steering knuckle.
9. Differential-side joint of right drive axle shaft from front axle housing using a J 37780. Place the J 37780 between the front axle housing and the differential-side joint and gently tap the differential-side joint away and out of the front axle housing (Figure 9).

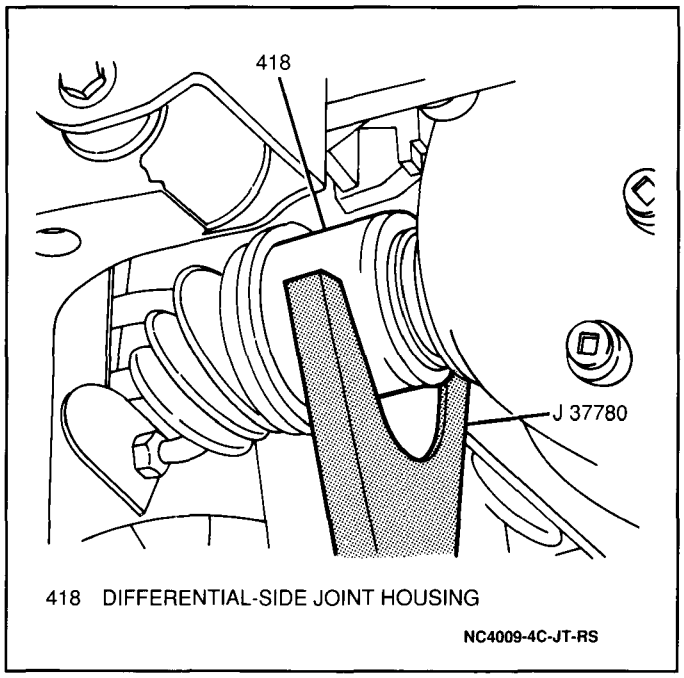

Figure 9 Removing Right Drive Axle Shaft

Inspect

- For drive axle shaft disassembly and inspection procedures, refer to "Unit Repair" later in this section.

Install or Connect

1. Differential-side joint of the right drive axle shaft into the front axle housing making sure the snap ring seats in the differential side gear.
2. Wheel-side joint of the right drive axle shaft into the steering knuckle.

- Support right front control arm with a hydraulic jack.

3. Steering knuckle and lower ball joint to right front control arm; secure with three nuts and bolts.

Tighten

- Lower ball joint bolts and nuts to 85 N·m (63 lb.ft.).

- Remove hydraulic jack.

4. Drive axle shaft spindle washer onto the drive axle shaft.
5. Drive axle shaft snap ring on end of drive axle.
6. Locking hub cover onto locking hub body making sure to align the index key in the locking hub cover with the notched portion in the locking hub body; secure with six Allen® head bolts (Figure 10).

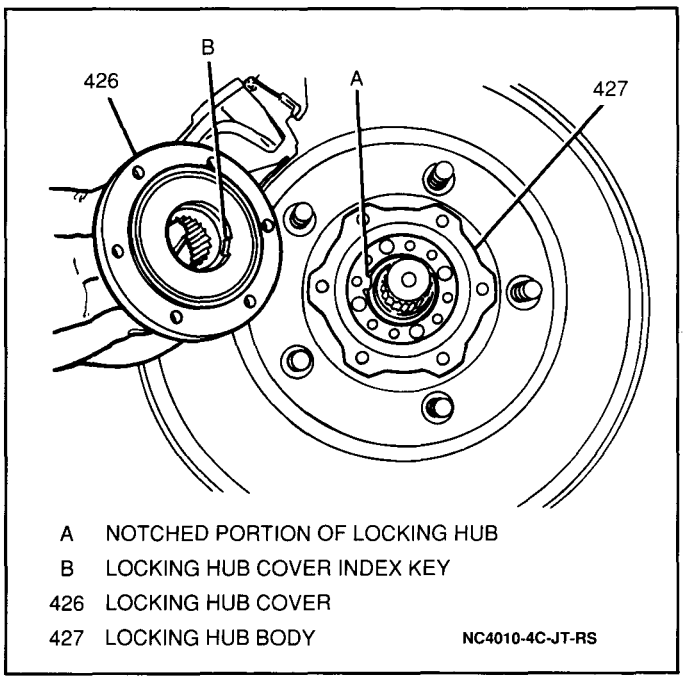

Figure 10 Aligning Locking Hub Index Key

Tighten

- Locking hub cover bolts to 25 N·m (18 lb.ft.).

7. Locking hub cap onto locking hub cover by screwing locking cap clockwise.
8. Right front tire and wheel assembly. Refer to SECTION 3E.
9. Front skid plate to vehicle; secure with four bolts (if equipped).

Tighten

- Front skid plate bolts to 54 N·m (40 lb.ft.).

- Lower vehicle.

LEFT DRIVE AXLE SHAFT

Figures 7, 8, 10 and 11

Remove or Disconnect

- Raise and suitably support vehicle. Refer to SECTION 0A.

1. Four bolts and front skid plate from vehicle (if equipped).
2. Left front tire and wheel assembly. Refer to SECTION 3E.
3. Locking hub cap from locking hub cover by unscrewing locking hub cap counterclockwise (Figure 7).
4. Six Allen® head bolts and locking hub cover from locking hub body (Figure 8).
5. Drive axle shaft snap ring from end of drive axle shaft.
6. Drive axle shaft spindle washer from drive axle shaft.

- Support left front control arm with a hydraulic jack.

CAUTION: Coil spring is under extreme pressure. Make sure control arm is firmly supported with a hydraulic jack before removing lower ball joint bolts. After lower ball joint bolts have been removed, lower hydraulic jack slowly to relieve coil spring pressure. If this precaution is not observed, serious bodily injury may result.

7. Three nuts, three bolts and separate steering knuckle and lower ball joint from left front control arm.

- Slowly lower hydraulic jack until coil spring pressure is relieved.

8. Wheel-side joint of the left drive axle from the steering knuckle.
9. Wheel-side joint of the left drive axle shaft from the steering knuckle.

- Place an index mark (reference mark) on the left inner axle shaft flange and the differential-side joint flange of the left drive axle shaft and to ensure correct installation (Figure 11).

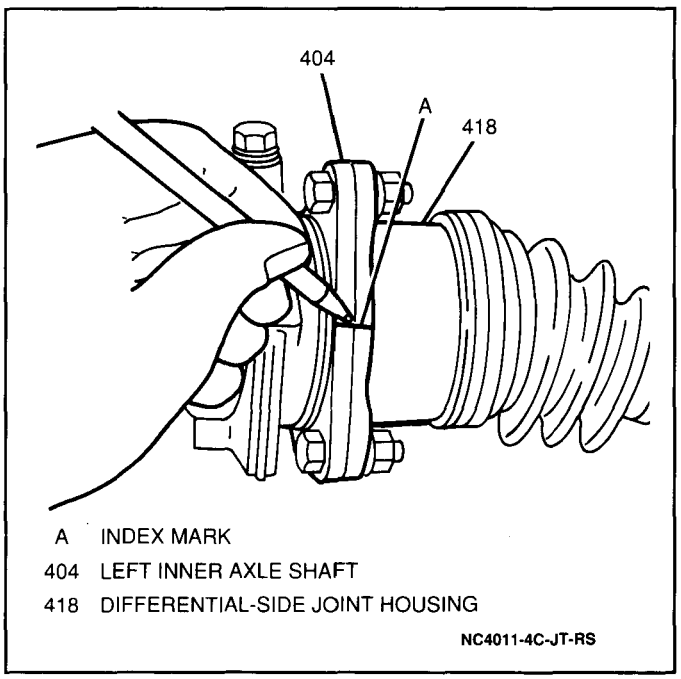

Figure 11 Index Marking Differential-Side Joint and Left Inner Axle Shaft

10. Three bolts, three nuts and separate the differential-side joint flange of the left drive axle shaft from the left inner axle shaft flange.

Inspect

- For drive axle shaft disassembly and inspection procedures, refer to "Unit Repair" later in this section.

Install or Connect

1. The differential-side joint flange of the left drive axle shaft to the left inner axle shaft flange aligning index marks (reference marks) on the left inner axle shaft flange and the differential-side joint flange of the left drive axle shaft; secure with three bolts and three nuts (Figure 11).

Tighten

- Left differential-side joint bolts and nuts to 60 N·m (43 lb.ft.).

2. Wheel-side joint of the left front drive axle shaft into the steering knuckle.

- Support left front control arm with a hydraulic jack.

3. Steering knuckle and lower ball joint to left front control arm; secure with three nuts and three bolts.

Tighten

- Lower ball joint bolts and nuts to 85 N·m (63 lb.ft.).

- Remove hydraulic jack.

4. Drive axle shaft spindle washer onto the drive axle shaft.
5. Drive axle shaft snap ring on end of drive axle.
6. Locking hub cover onto locking hub body making sure to align the index key in the locking hub cover with the notched portion in the locking hub body; secure with six Allen® head bolts (Figure 10).

Tighten

- Locking hub cover bolts to 25 N·m (18 lb.ft.).

7. Locking hub cap onto locking hub cover by screwing locking hub cap clockwise (Figure 7).
8. Left front tire and wheel assembly. Refer to SECTION 3E.
9. Front skid plate to vehicle; secure with four bolts (if equipped).

Tighten

- Front skid plate bolts to 54 N·m (40 lb.ft.).

- Lower vehicle.

LEFT INNER AXLE SHAFT, BEARING AND OIL SEAL

Figures 12 through 15

Remove or Disconnect

Tools Required:
J 37780 Axle Shaft Remover
J 26941 Knuckle Seal Remover
J 29369-1 Axle Bearing Remover
J 23907 Slide Hammer

- Raise and suitably support vehicle. Refer to SECTION 0A.

1. Left drive axle shaft from vehicle. Refer to "Left Drive Axle Shaft" earlier in this section.
2. Left inner axle shaft from front axle housing using a J 37780. Place the J 37780 between the front axle housing and the left inner axle shaft flange and gently tap the left inner axle shaft away and out of the front axle housing.
3. Left inner axle shaft oil seal from front axle housing using a J 26941 with a J 23907. Place the J 26941 into the left inner axle shaft oil seal and tighten the thumb screw on the J 26941 until the J 26941 has a firm grasp on the left inner axle shaft oil seal. Then, attach a J 23907 into the J 26941 and gently tap the left inner axle shaft oil seal out of the front axle housing (Figure 12).

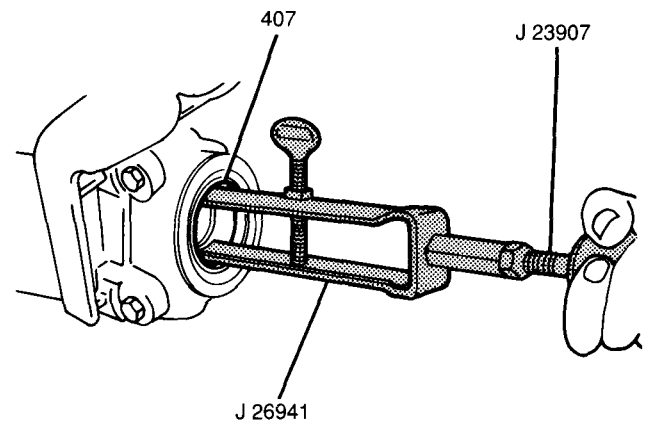

407 LEFT INNER AXLE SHAFT OIL SEAL

NC4012-4C-JT-RS

Figure 12 Removing Left Inner Axle Shaft Oil Seal

4. Left inner axle shaft bearing snap ring from front axle housing.
5. Left inner axle shaft bearing using a J 29369-1 with the J 23907. Insert the J 29369-1 into the left inner axle shaft bearing and tighten thumb screw until the remover has a firm grasp on the bearing. Then attach the J 23907 to the J 29369-1 and gently tap the bearing out of the front axle housing (Figure 13).

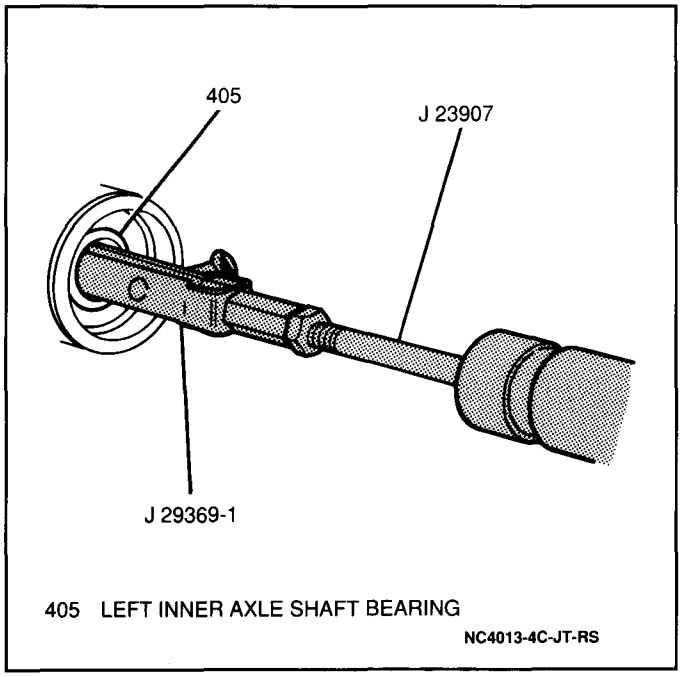

Figure 13 Removing Left Inner Axle Shaft Bearing

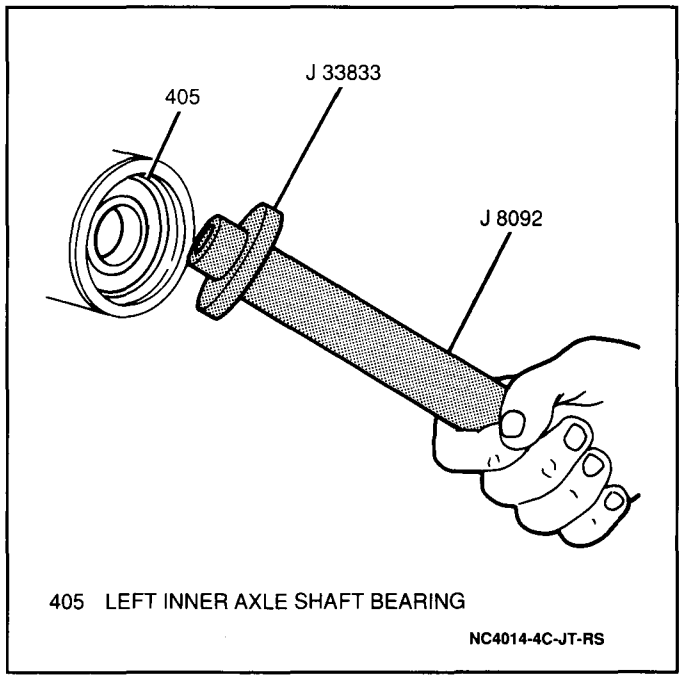

Figure 14 Installing Left Inner Axle Shaft Bearing

Inspect

1. Left inner axle shaft bearing for roughness or excessive wear. Replace as necessary.
2. Left inner axle shaft surface for scoring or burrs where the left inner axle shaft seal makes contact. Replace as necessary.

Install or Connect

Tools Required:
J 33833 Axle Bearing Installer
J 37770 Axle Shaft Oil Seal Installer
J 8092 Driver Handle

Important

- The right and left axle shaft oil seals are designed to be installed into the front axle housing at different depths. The J 37770 is two sided and is stamped with the letters "R" and "L" to ensure correct axle shaft oil seal installation. If either axle shaft seal is incorrectly installed, damage to the seal and/or internal components due to leakage may result.

1. Left inner axle shaft bearing into the front axle housing using a J 33833 with a J 8092 (Figure 14).
2. Left inner axle shaft bearing snap ring into the front axle housing.
3. Left inner axle shaft oil seal into the front axle housing using a J 37770 with a J 8092 (Figure 15).

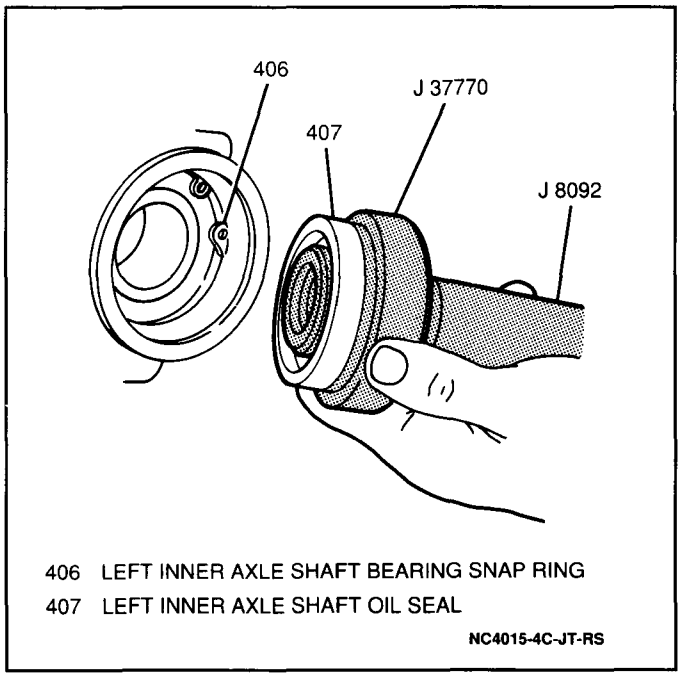

Figure 15 Installing Left Inner Axle Shaft Oil Seal

4. Left inner axle shaft into the front axle housing making sure the snap ring seats in the differential side gear.
5. Left drive axle shaft into vehicle. Refer to "Left Drive Axle Shaft" earlier in this section.
- Lower vehicle.

RIGHT DRIVE AXLE SHAFT OIL SEAL

Figures 15 and 16

Remove or Disconnect

Tools Required:
J 26941 Knuckle Seal Remover
J 23907 Slide Hammer

- Raise and suitably support vehicle. Refer to SECTION 0A.
1. Right front drive axle shaft from vehicle. Refer to "Right Drive Axle Shaft" earlier in this section.
2. Right drive axle shaft oil seal from front axle housing using a J 26941 with a J 23907. Place the J 26941 into the right drive axle shaft oil seal and tighten the thumb screw on the J 26941 until the J 26941 has a firm grasp on the right drive axle shaft oil seal. Then, attach a J 23907 into the J 26941 and gently tap the right drive axle shaft oil seal out of the front axle housing (Figure 16).

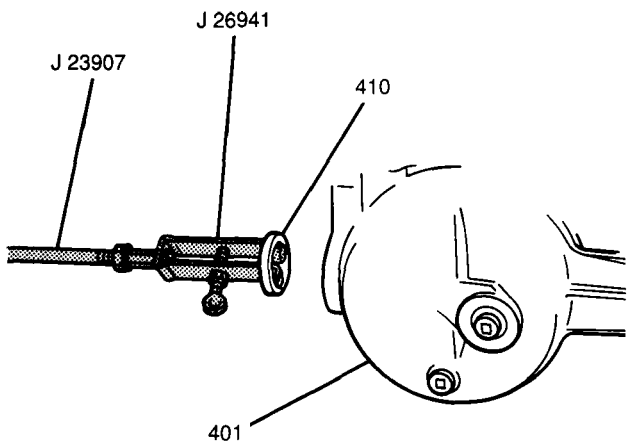

401 FRONT AXLE HOUSING
410 RIGHT DRIVE AXLE SHAFT OIL SEAL
NC4016-4C-JT-RS

Figure 16 Removing Right Drive Axle Shaft Oil Seal

Inspect

- Right drive axle shaft surface for scoring or burrs where the right drive axle shaft oil seal makes contact. Replace as necessary.

Install or Connect

Tools Required:
J 37770 Axle Shaft Oil Seal Installer
J 8092 Driver Handle

Important

- The right and left axle shaft oil seals are designed to be installed into the front axle housing at different depths. The J 37770 is two sided and is stamped with the letters "R" and "L" to ensure correct axle shaft oil seal installation. If either axle shaft seal is incorrectly installed, damage to the seal and/or internal components due to leakage may result.

1. New right drive axle shaft oil seal into the front axle housing using a J 37770 with a J 8092 (Figure 15).
2. Right drive axle shaft into vehicle. Refer to "Right Drive Axle Shaft" earlier in this section.
- Lower vehicle.

FRONT AXLE HOUSING

Figures 6 and 17 through 21

Remove or Disconnect

Tools Required:
J 29369-1 Axle Bearing Remover
J 23907 Slide Hammer

- Raise and suitably support vehicle. Refer to SECTION 0A.
1. Four bolts and front skid plate from vehicle (if equipped).
- Place a drain pan or suitable container under front axle housing.
2. Front axle housing oil level/filler plug from front axle housing (Figure 6).
3. Front axle housing drain plug from front axle housing and drain front axle oil (Figure 6).
4. Right drive axle shaft from vehicle. Refer to "Right Drive Axle Shaft" earlier in this section.
5. Right drive axle shaft oil seal from front axle housing. Refer to "Right Drive Axle Shaft Oil Seal" earlier in this section.
6. Left drive axle shaft from vehicle. Refer to "Left Drive Axle Shaft" earlier in this section.
7. Left inner axle shaft, oil seal and bearing from front axle housing. Refer to "Left Inner Axle Shaft, Bearing and Oil Seal" earlier in this section.

Important

- To ensure front propeller shaft balance, an index mark (reference mark) must be placed on the pinion flange and the pinion flange yoke so that the front propeller shaft can be installed in the same position from which it was removed. If this procedure is not followed, a driveline imbalance may result causing vibration, premature component wear, or other undesirable characteristics.

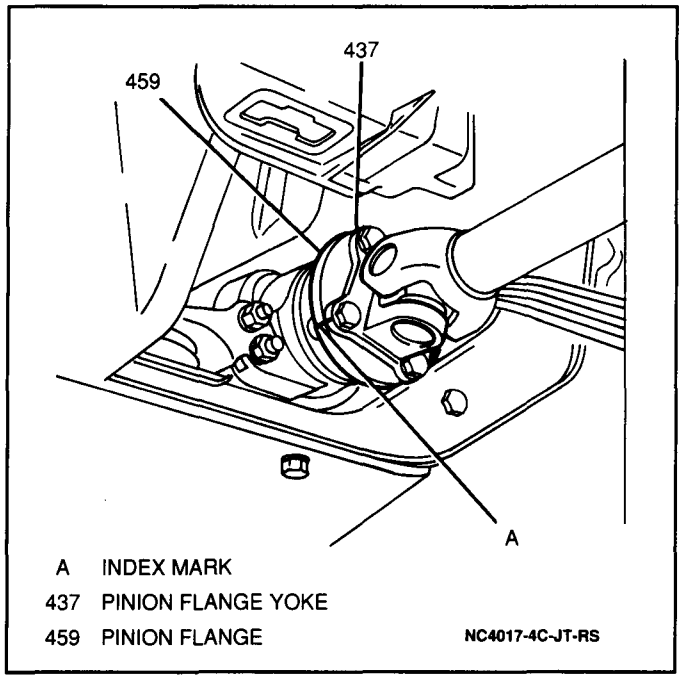

Figure 17 Index Marking Pinion Flange and Pinion Flange Yoke

8. Four bolts, four nuts and front propeller shaft from vehicle (Figure 17).
9. Two bolts and two nuts from front axle housing center mount bracket at engine crossmember (Figure 18).

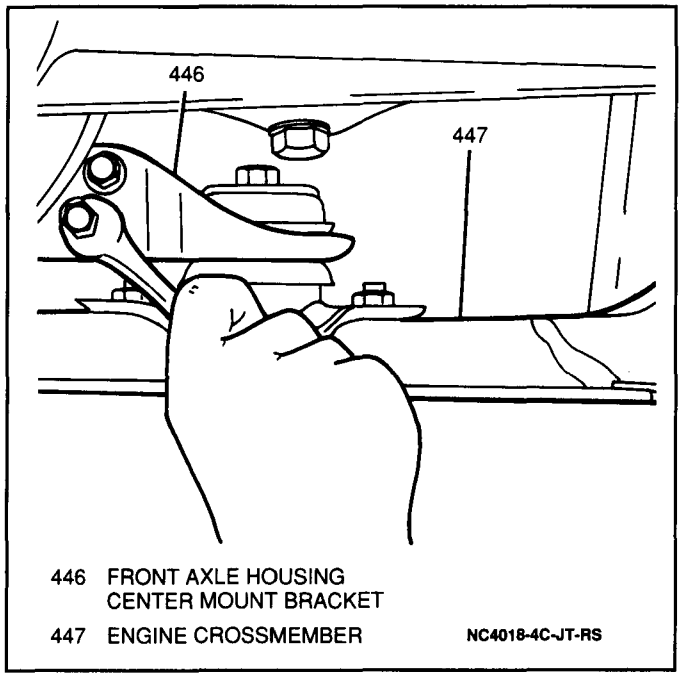

Figure 18 Removing Center Mount Bolts

- Remove drain pan from under front axle housing.
- Support front axle housing with a hydraulic jack.

10. One clamp and front axle breather hose from front axle housing.
11. Plastic breather hose connector from front axle housing.
12. Three bolts from front axle housing right mount bracket (Figure 19).

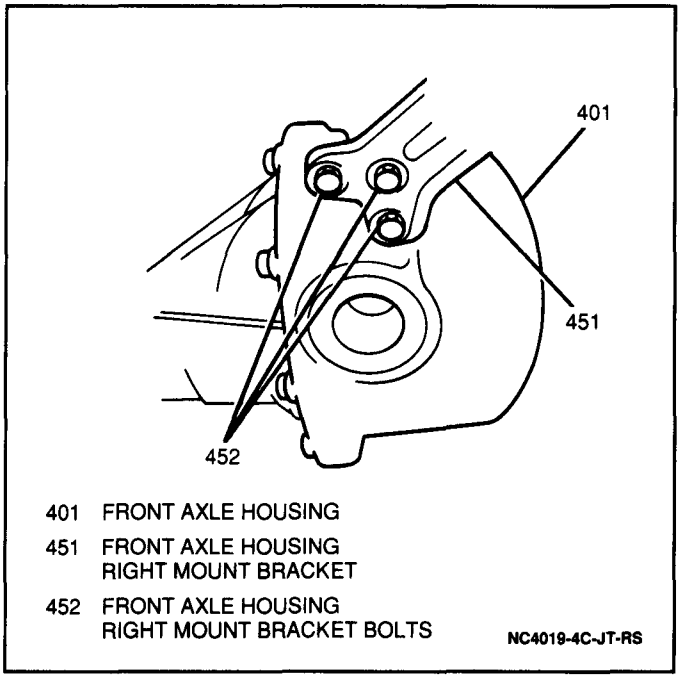

Figure 19 Front Axle Housing Right Mount Bracket

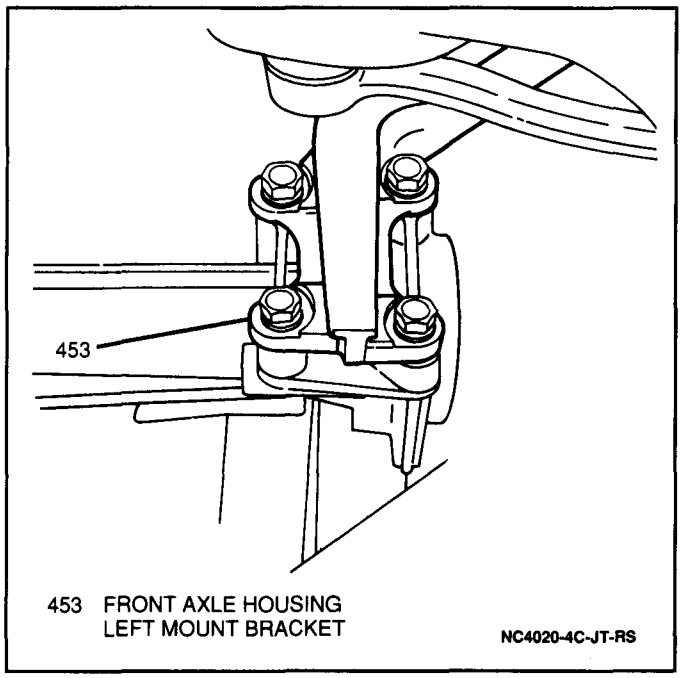

Figure 20 Front Axle Housing Left Mount Bracket

13. Four bolts from front axle housing left mount bracket (Figure 20).
- Lower hydraulic jack and front axle housing.
14. Eight bolts and differential carrier from front axle housing.

Clean

- Front axle housing with solvent thoroughly and dry.

Inspect

- Front axle housing for cracked or damaged seal or bearing surfaces. Replace as necessary.

Install or Connect

- Apply RTV silicone sealer GM P/N 1052917, or equivalent, to the differential carrier mating surface on the front axle housing.
1. Differential carrier into the front axle housing; secure with eight differential carrier bolts (Figure 21).

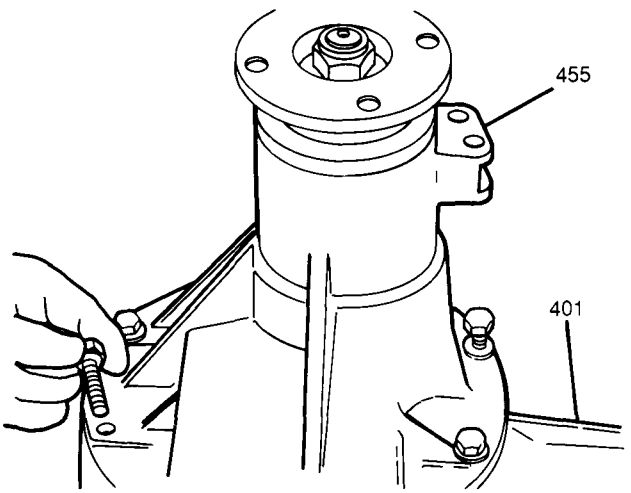

401 FRONT AXLE HOUSING
455 DIFFERENTIAL CARRIER
NC4021-4C-JT-RS

Figure 21 Installing Differential Carrier Into Front Axle Housing

Tighten

- Differential carrier bolts to 23 N·m (17 lb.ft.).

- Raise front axle housing into position using a suitable hydraulic jack.
2. Four bolts into front axle housing left mount bracket (Figure 20).

Tighten

- Front axle housing left mount bracket bolts to 60 N·m (43 lb.ft.).

3. Three bolts into front axle housing right mount bracket (Figure 19).

Tighten

- Front axle housing right mount bracket bolts to 60 N·m (43 lb.ft.).

4. Plastic breather hose connector into front axle housing.
5. Front axle breather hose into front axle housing; secure with one clamp.
- Remove hydraulic jack from under front axle housing.
6. Two bolts and two nuts into front axle housing mounting center mount bracket at engine crossmember (Figure 18).

Tighten

- Front axle housing center mount bracket bolts and nuts to 60 N·m (43 lb.ft.).

7. Front propeller shaft into vehicle aligning index marks made during removal; secure with four bolts and four nuts (Figure 17).

Tighten

- Front propeller shaft bolts and nuts to 60 N·m (43 lb.ft.).

8. Left inner axle shaft bearing, left inner axle shaft oil seal and left inner axle shaft into front axle housing. Refer to "Left Inner Axle Shaft, Oil Seal and Bearing" earlier in this section.
9. Left drive axle shaft into vehicle. Refer to "Left Drive Axle Shaft" earlier in this section.
10. Right drive axle shaft oil seal into front axle housing. Refer to "Right Drive Axle Shaft Oil Seal" earlier in this section.
11. Right drive axle shaft into vehicle. Refer to "Right Drive Axle Shaft" earlier in this section.
12. Front axle housing drain plug into front axle housing (Figure 6).

Tighten

- Front axle housing drain plug to 23 N·m (17 lb.ft.).

- Refill front axle housing with approximately 1 liter (1.8 pts.) of synthetic 75W-90 GL4 lubricant GM P/N 12345871, or equivalent.
13. Front axle housing oil level/filler plug into front axle housing (Figure 6).

Tighten

- Front axle housing oil level/filler plug to 45 N·m (33 lb.ft.).

14. Front skid plate to vehicle; secure with four bolts (if equipped).

Tighten

- Front skid plate bolts to 54 N·m (40 lb.ft.).

- Lower vehicle.

DIFFERENTIAL CARRIER

Figures 6 and 21

Remove or Disconnect

- Raise and suitably support vehicle. Refer to SECTION 0A.

1. Four bolts and front skid plate from vehicle (if equipped).

- Place a drain pan or suitable container under front axle housing.

2. Front axle housing oil level/filler plug from front axle housing (Figure 6).
3. Front axle housing drain plug and drain front axle oil (Figure 6).
4. Front axle housing assembly. Refer to "Front Axle Housing" earlier in this section.
5. Eight differential carrier bolts and differential carrier from front axle housing.

Clean

- Differential carrier and front axle housing mating surfaces.

Inspect

- For front differential carrier disassembly and inspection procedures, refer to "Unit Repair" later in this section.

Install or Connect

- Apply RTV silicone sealer GM P/N 1052917, or equivalent, to the differential carrier mating surface on the front axle housing.

1. Differential carrier into front axle housing; secure with eight differential carrier bolts (Figure 21).

Tighten

- Differential carrier bolts to 23 N·m (17 lb.ft.).

2. Front axle housing into vehicle. Refer to "Front Axle Housing" earlier in this section.
3. Front axle housing drain plug into front axle housing (Figure 6).

Tighten

- Front axle housing drain plug to 23 N·m (17 lb.ft.).

- Refill front axle housing with approximately 1 liter (1.8 pts.) of synthetic 75W-90 GL4 lubricant GM P/N 12345871, or equivalent.

4. Front axle housing oil level/filler plug into front axle housing (Figure 6).

Tighten

- Front axle housing oil level/filler plug to 45 N·m (33 lb.ft.).

5. Front skid plate to vehicle; secure with four bolts (if equipped).

Tighten

- Front skid plate bolts to 54 N·m (40 lb.ft.).

- Lower vehicle.

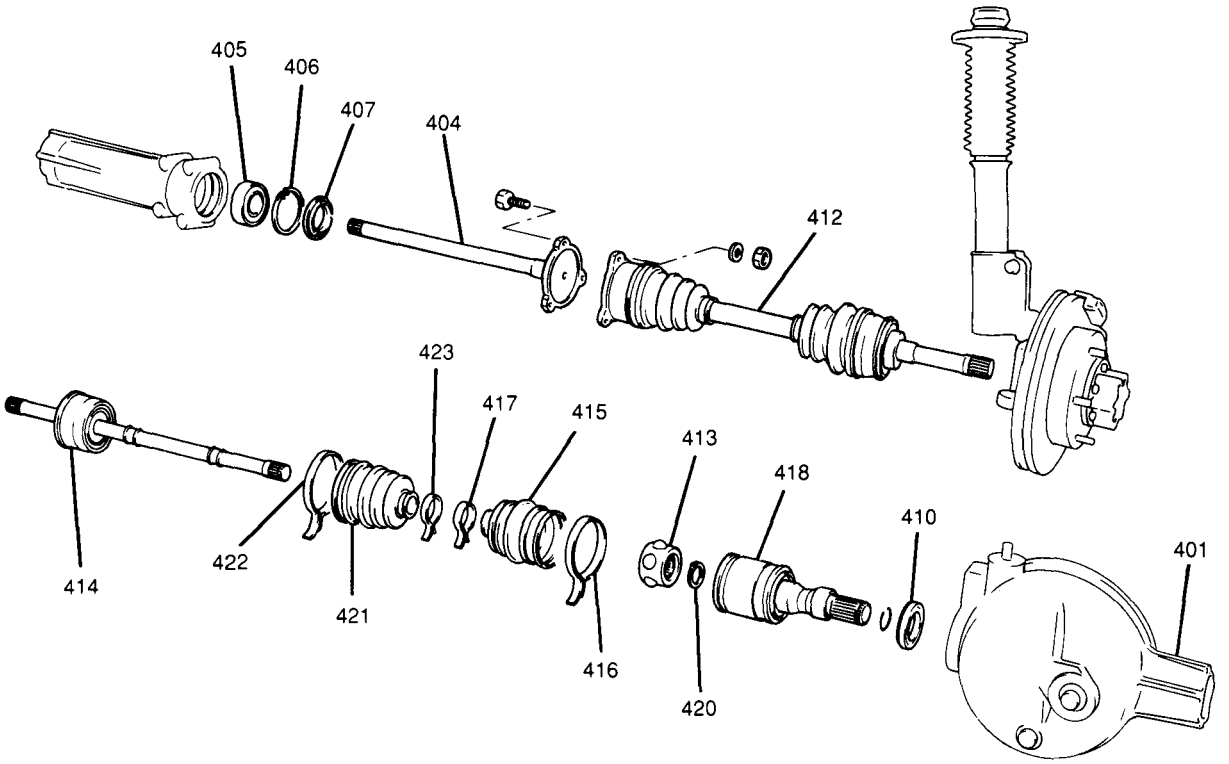

401 FRONT AXLE HOUSING
404 LEFT INNER AXLE SHAFT
405 LEFT INNER AXLE SHAFT BEARING
406 LEFT INNER AXLE SHAFT BEARING SNAP RING
407 LEFT INNER AXLE SHAFT OIL SEAL
410 RIGHT DRIVE AXLE SHAFT OIL SEAL
412 LEFT DRIVE AXLE SHAFT
413 DIFFERENTIAL-SIDE JOINT
414 WHEEL-SIDE JOINT
415 DIFFERENTIAL-SIDE BOOT
416 DIFFERENTIAL-SIDE BOOT BAND
417 DIFFERENTIAL-SIDE SHAFT BOOT BAND
418 DIFFERENTIAL-SIDE JOINT HOUSING
420 DIFFERENTIAL-SIDE JOINT SNAP RING
421 WHEEL-SIDE BOOT
422 WHEEL-SIDE BOOT BAND
423 WHEEL-SIDE SHAFT BOOT BAND

NC4022-4C-JT-RS

Figure 22 Front Drive Axle Shafts

UNIT REPAIR

DRIVE AXLE SHAFT

Figures 22 through 26

Remove or Disconnect

1. Differential-side joint boot band from differential-side joint (Figure 23).

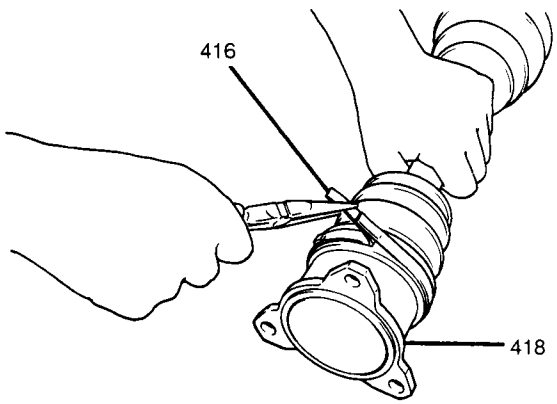

416 DIFFERENTIAL-SIDE BOOT BAND
418 DIFFERENTIAL-SIDE JOINT HOUSING
NC4023-4C-JT-RS

Figure 23 Removing Differential-Side Joint Boot Band

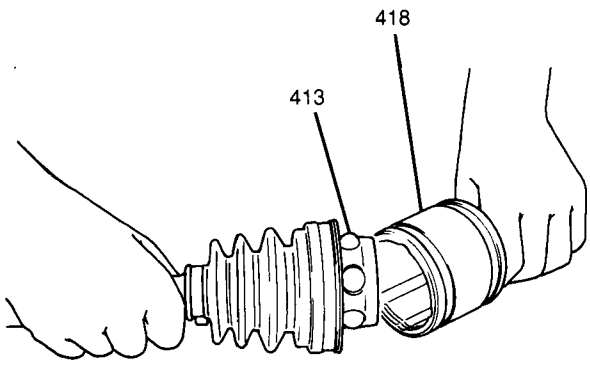

413 DIFFERENTIAL-SIDE JOINT
418 DIFFERENTIAL-SIDE JOINT HOUSING
NC4024-4C-JT-RS

Figure 24 Removing Differential-Side Joint Housing

2. Differential-side joint housing from differential-side joint (Figure 24).
3. Differential-side joint snap ring from drive axle shaft.

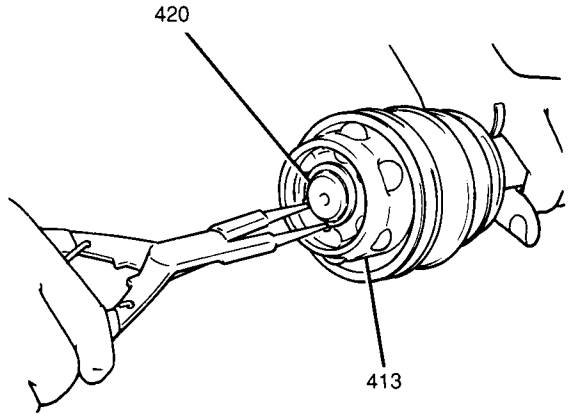

413 DIFFERENTIAL-SIDE JOINT
420 DIFFERENTIAL-SIDE JOINT SNAP RING
NC4025-4C-JT-RS

Figure 25 Removing Differential-Side Joint Snap Ring

4. Differential-side joint from drive axle shaft.
5. Differential-side shaft boot band from drive axle shaft.
6. Differential-side boot from drive axle shaft.
7. Wheel-side shaft boot band from drive axle shaft.
8. Wheel-side boot band from wheel-side joint.
9. Wheel-side boot from drive axle shaft.

NOTICE: DO NOT disassemble the wheel-side joint (outboard joint). If any abnormality is found in the wheel-side joint, replace it as an assembly. DO NOT disassemble the differential-side (inboard joint). If any abnormality is found in the differential-side joint, replace it as an assembly.

NOTICE: DO NOT wash drive axle boots in degreaser. Washing drive axle boots in degreaser or other solvents causes deterioration of boots. Clean boots with a clean, dry, solvent-free cloth. DO NOT wash the differential-side joint in degreaser or other solvents. Clean the differential-side joint with a clean, dry, solvent-free cloth. If any abnormality is found in the differential-side joint, replace the differential-side joint as an assembly.

Clean

1. Differential-side joint with a clean, dry, solvent-free cloth.
2. Wheel-side joint with a clean, dry, solvent-free cloth.
3. Drive axle boots with a clean, dry, solvent-free cloth.
4. Remaining disassembled parts with solvent and dry thoroughly with a clean cloth or compressed air.

Inspect

- All parts thoroughly before reassembly. Replace any excessively worn parts. Make sure all parts are clean and dry.

Install or Connect

1. Wheel-side boot onto the drive axle shaft.
   - Lubricate the wheel-side joint assembly and fill the wheel-side boot with approximately 70 grams (2.5 oz.) of grease provided in the axle shaft grease kit GM P/N 7845352, or equivalent.
2. Wheel-side boot on the wheel-side joint assembly.
3. Wheel-side shaft boot band onto the wheel side joint.
4. Differential-side boot onto drive axle shaft.
5. Differential-side shaft boot band onto the drive axle shaft.
   - Fill differential-side boot with approximately 90 grams (3.2 oz.) of grease provided in the axle shaft grease kit GM P/N 7845352 or equivalent.
6. Differential-side joint onto drive axle shaft.
7. Differential-side joint snap ring onto the drive axle shaft.
8. Differential-side joint housing onto differential-side joint.
9. Differential-side boot band to the differential-side joint.

Inspect

- Both joint boots for distortion or dents. Correct by pulling outward on the distorted areas until both boots are symmetrical.

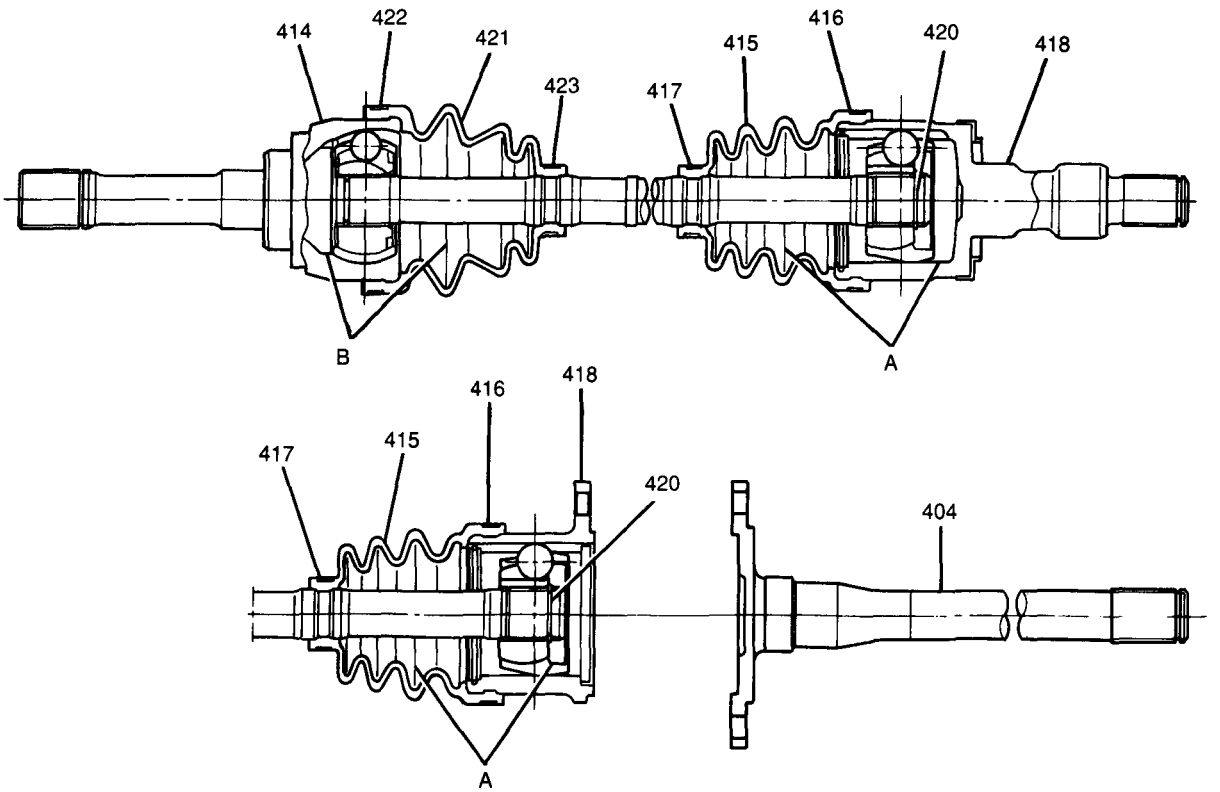

A	90 GRAMS (3.2 OZ.) AXLE SHAFT GREASE GM P/N 7845352, OR EQUIVALENT
B	70 GRAMS (2.5 OZ.) AXLE SHAFT GREASE GM P/N 7845352, OR EQUIVALENT
404	LEFT INNER AXLE SHAFT
414	WHEEL-SIDE JOINT
415	DIFFERENTIAL-SIDE BOOT
416	DIFFERENTIAL-SIDE BOOT BAND
417	DIFFERENTIAL-SIDE SHAFT BOOT BAND
418	DIFFERENTIAL-SIDE JOINT HOUSING
420	DIFFERENTIAL-SIDE JOINT SNAP RING
421	WHEEL-SIDE BOOT
422	WHEEL-SIDE BOOT BAND
423	WHEEL-SIDE SHAFT BOOT BAND

NC4026-4C-JT-RS

Figure 26 Front Drive Axle Shaft Assembly

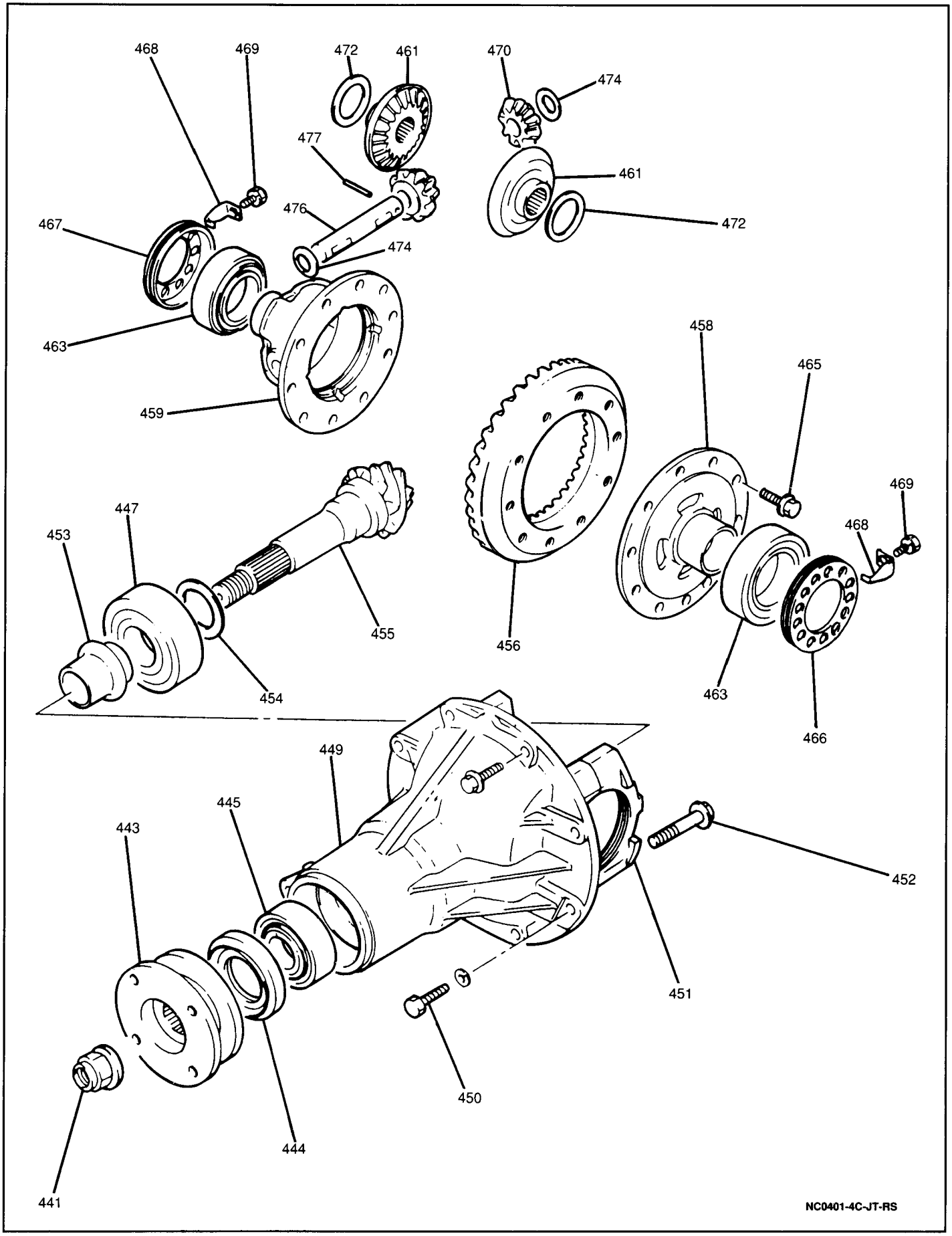

Figure 27 Differential Carrier Components

441	PINION FLANGE NUT	458	RIGHT DIFFERENTIAL CASE
443	PINION FLANGE	459	LEFT DIFFERENTIAL CASE
444	PINION SEAL	461	SIDE GEAR
445	OUTER PINION BEARING	463	SIDE BEARING
447	INNER PINION BEARING	465	RING GEAR BOLTS
449	DIFFERENTIAL CARRIER	466	RIGHT SIDE BEARING ADJUSTER
450	DIFFERENTIAL CARRIER BOLTS	467	LEFT SIDE BEARING ADJUSTER
451	SIDE BEARING CAP	468	SIDE BEARING LOCK PLATE
452	SIDE BEARING CAP BOLT	469	SIDE BEARING LOCK PLATE BOLT
453	COLLAPSIBLE SPACER	470	DIFFERENTIAL PINION GEAR
454	PINION SELECTIVE SHIM	472	SIDE GEAR WASHER
455	PINION GEAR	474	PINION WASHER
456	RING GEAR	476	PINION SHAFT
		477	PINION SHAFT ROLL PIN

NC0402-4C-JT-RS

Figure 28 Differential Carrier Components – Legend

NOTICE: DO NOT pull outward on the differential-side joint housing. If the housing is pulled outward, the differential-side joint may become overextended and detach from the drive axle shaft.

DIFFERENTIAL CARRIER DISASSEMBLY

Figures 27 through 46

Remove or Disconnect

Tools Required:
- J 3289-20 Holding Fixture Base
- J 3289-21 Holding Fixture
- J 37769 Differential Holding Fixture Adapters
- J 8614-01 Flange Holder
- J 22912-01 Rear Bearing Remover
- J 22888-D Side Bearing Remover
- J 8107-4 Differential Side Bearing Remover Plug
- J 26941 Knuckle Seal Remover
- J 23907 Slide Hammer

- Mount differential carrier in a J 34162-A with the J 37769.
- Place differential carrier and holding fixture into a J 3289-20 (Figure 29).

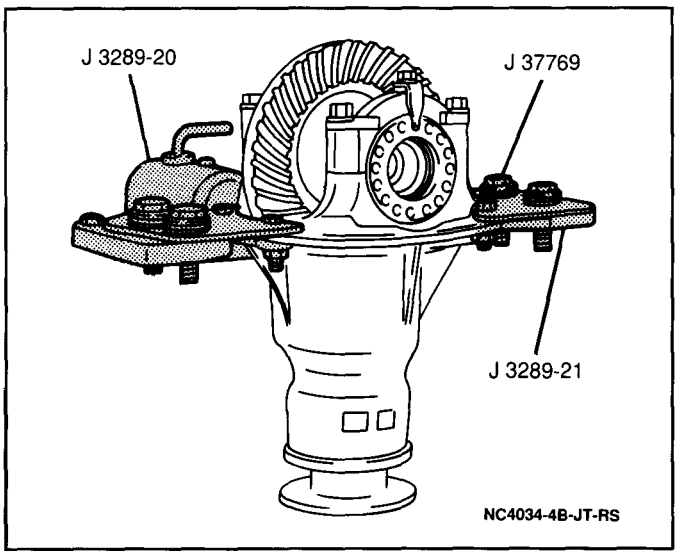

Figure 29 Differential Carrier Bench Mounting

- Inscribe alignment marks on differential side bearing caps to ensure proper assembly.

1. Two bolts and side bearing lock plates from differential carrier (Figure 30).

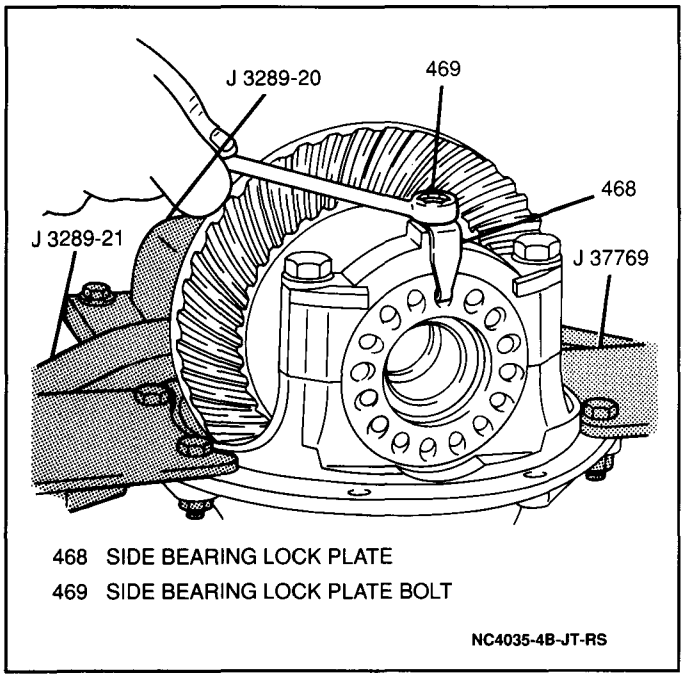

Figure 30 Removing Side Bearing Lock Plate

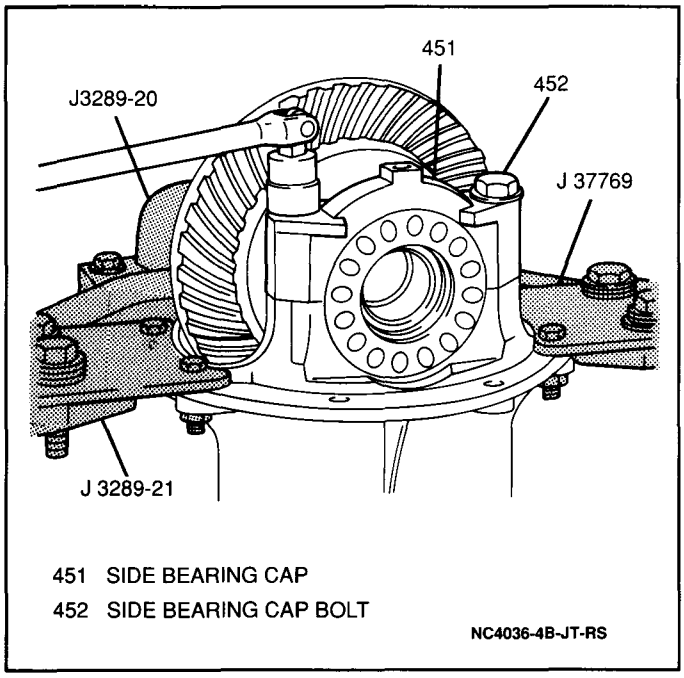

Figure 31 Removing Side Bearing Cap Bolts

2. Four bolts and side bearing caps from differential carrier (Figure 31).
3. Side bearing adjusters and bearing races from differential carrier (Figure 32).

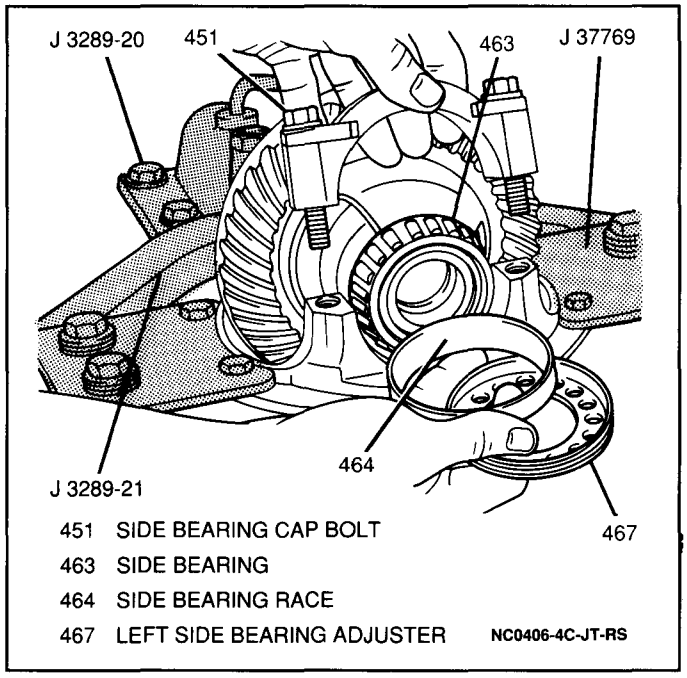

Figure 32 Removing Side Bearing Adjusters and Races

4. Differential ring gear and case from differential carrier.

- Turn differential carrier and holding fixture over so that pinion flange nut is horizontal (90 degrees).
- Unstake pinion flange nut.

5. Pinion flange nut from pinion gear using a J 8614-01 to hold the pinion flange stationary (Figures 33 and 34).

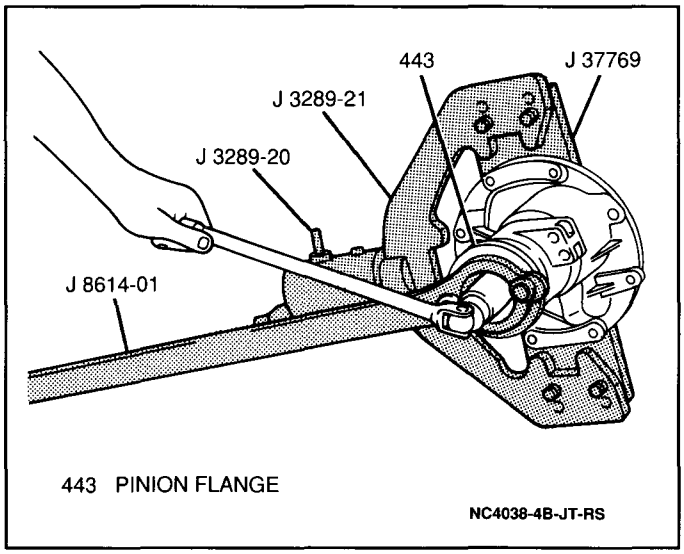

Figure 33 Removing Pinion Flange Nut

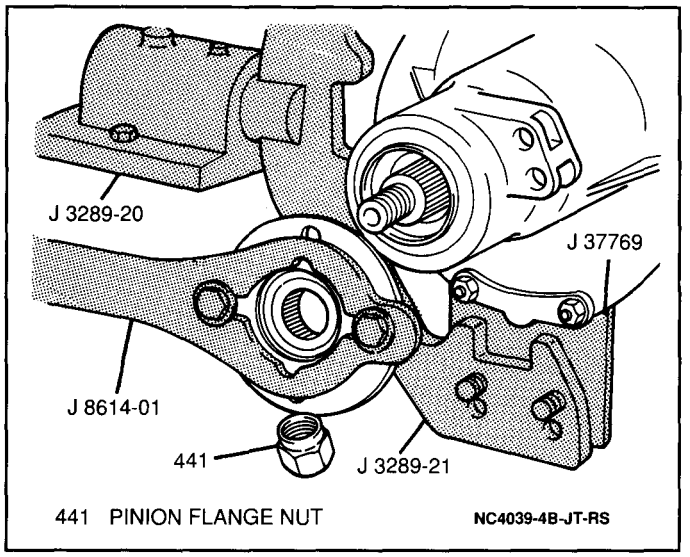

Figure 34 Pinion Nut and Pinion Flange

6. Pinion gear from differential carrier (Figure 35).

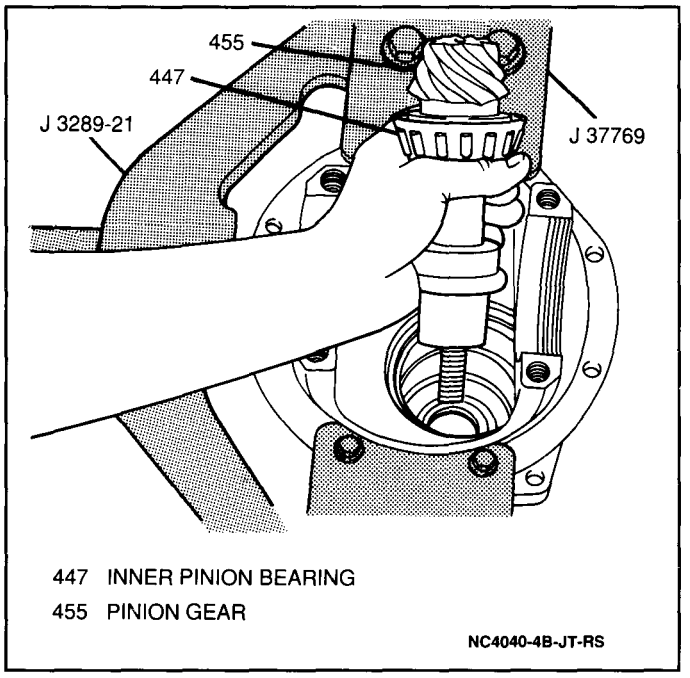

Figure 35 Removing Pinion Gear

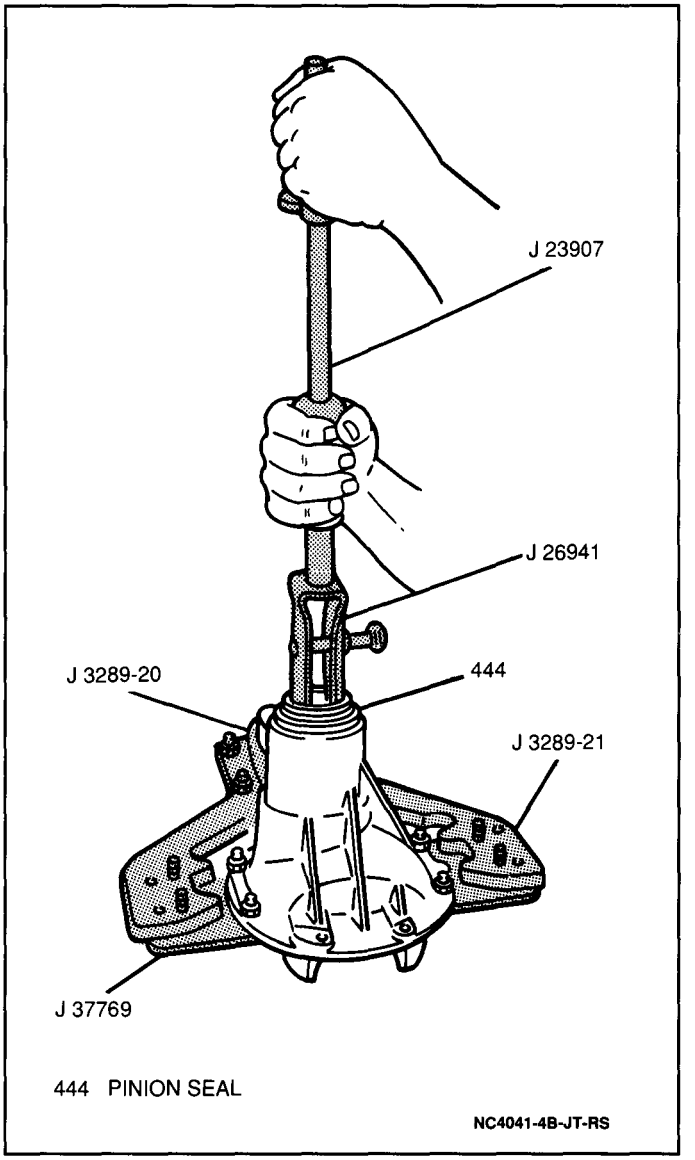

Figure 36 Removing Pinion Seal

7. Pinion seal from differential carrier using a J 26941 with a J 23907 (Figure 36).
8. Outer pinion bearing from differential carrier (Figure 37).

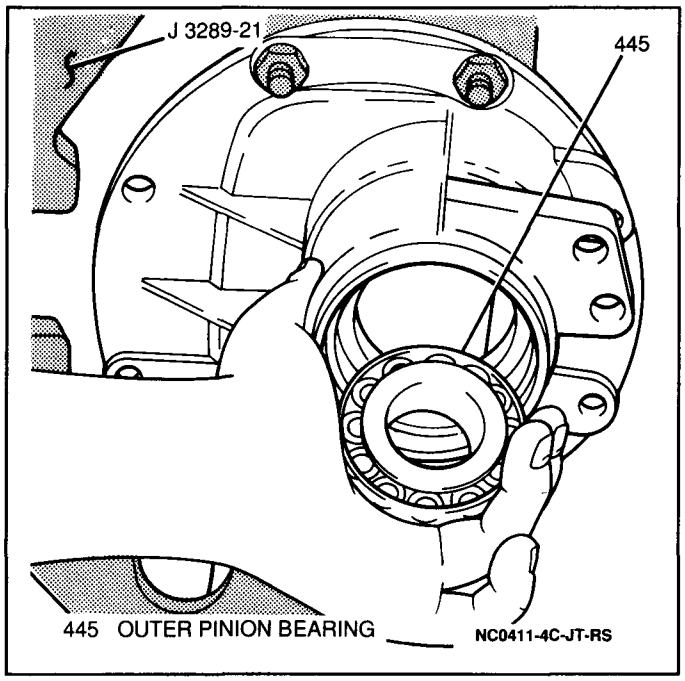

Figure 37 Removing Outer Pinion Bearing

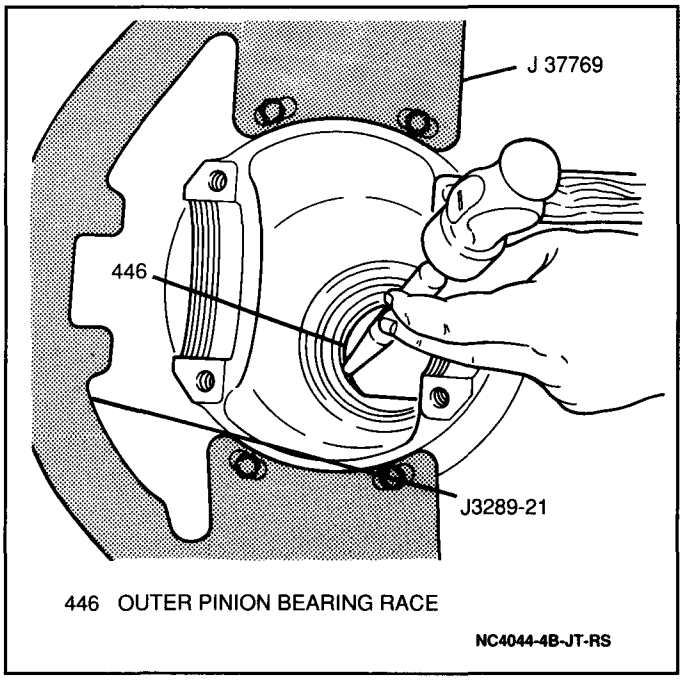

Figure 39 Removing Outer Pinion Bearing Race

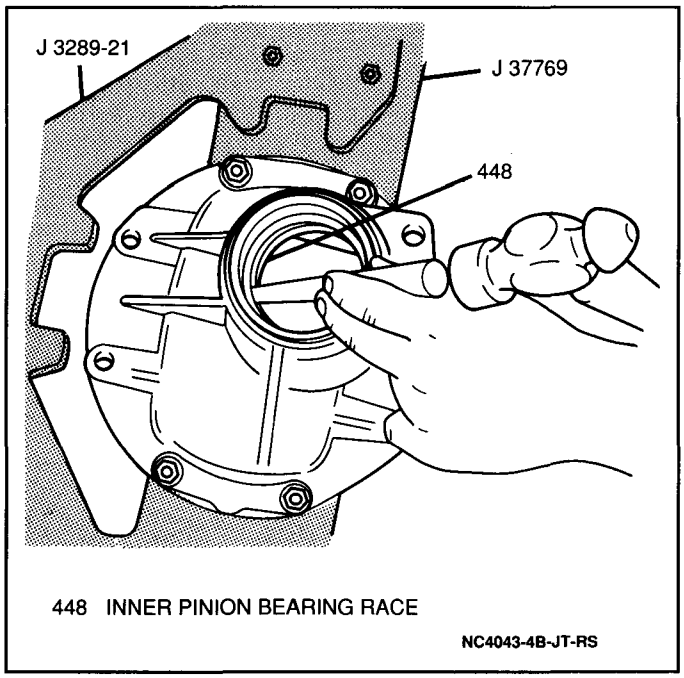

Figure 38 Removing Inner Pinion Bearing Race

9. Inner and outer pinion bearing races from differential carrier using a large drift punch and hammer. Tap around the rear of each bearing race and slowly drive each race out evenly (Figures 38 and 39).

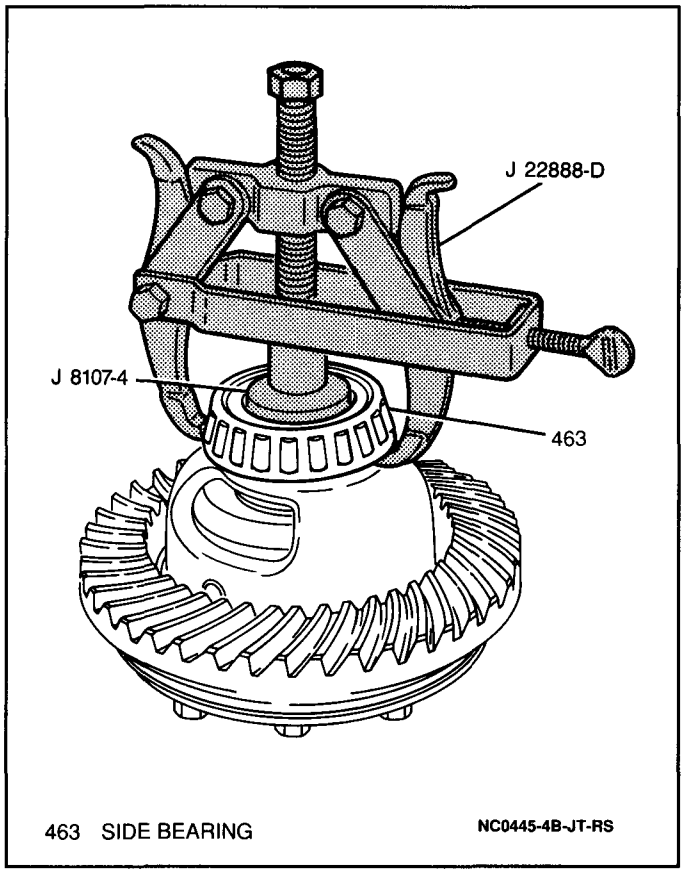

Figure 40 Removing Side Bearings

10. Side bearings from differential case using a J 22888-D with a J 8107-4 (Figure 40).

11. Ten bolts and ring gear from differential case (Figure 41).

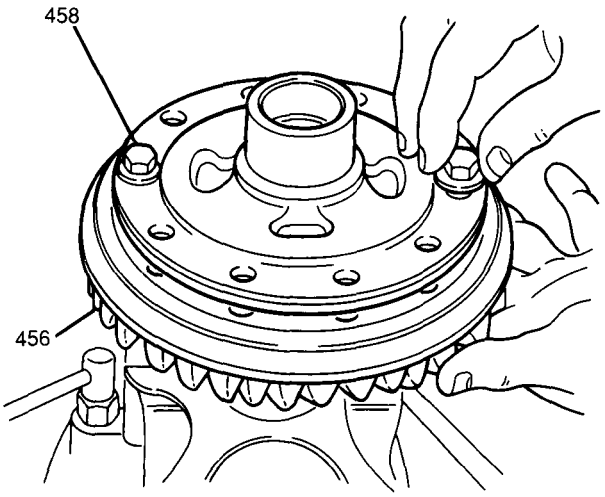

456 RING GEAR
458 RIGHT DIFFERENTIAL CASE NC0415-4C-JT-RS

Figure 41 Removing Ring Gear Bolts

- Separate right and left differential case halves.

12. Pinion shaft roll pin, pinion shaft, differential pinion gears, washers and side gears with selective washers from differential case (Figure 42).

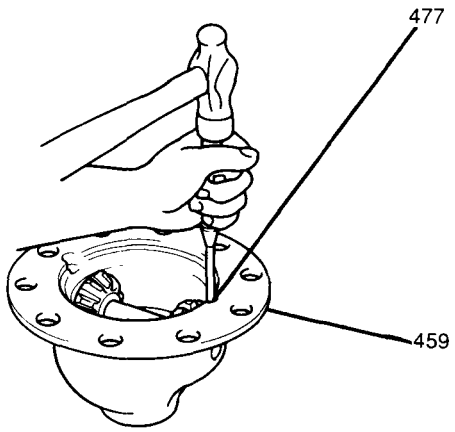

459 LEFT DIFFERENTIAL CASE
477 PINION SHAFT ROLL PIN NC0416-4C-JT-RS

Figure 42 Removing Pinion Shaft Roll Pin

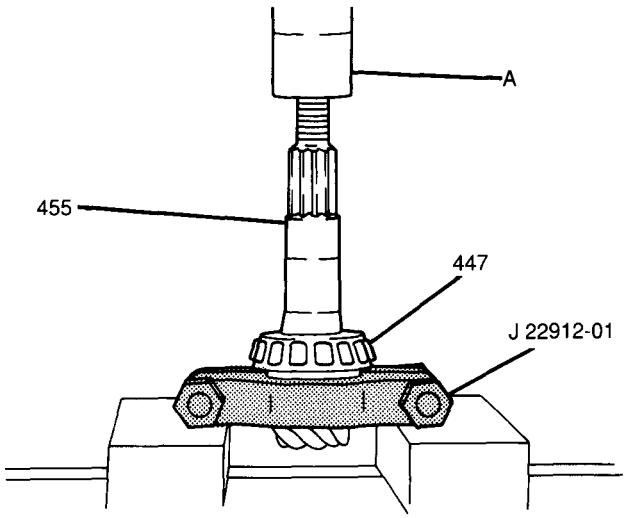

A PRESS ARBOR
447 INNER PINION BEARING
455 PINION GEAR NC4048-4B-JT-RS

Figure 43 Removing Inner Pinion Bearing

13. Inner pinion bearing and collapsible spacer from pinion gear shaft using a J22912-01. Place the J 22912-01 on the pinion gear shaft with the concave side toward the pinion gear. Then place the pinion gear in a hydraulic press and remove the inner pinion bearing (Figure 43).
14. Pinion selective shim from pinion gear shaft.

Clean

- All parts thoroughly with clean solvent and air dry. If compressed air is used to dry parts, DO NOT spin dry roller bearings with compressed air or bearing damage may result.

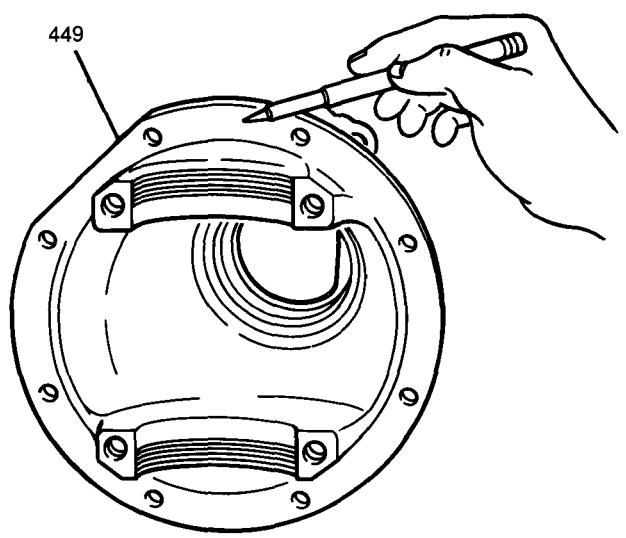

449 DIFFERENTIAL CARRIER
NC4049-4B-JT-RS

Figure 44 Inspecting Differential Carrier

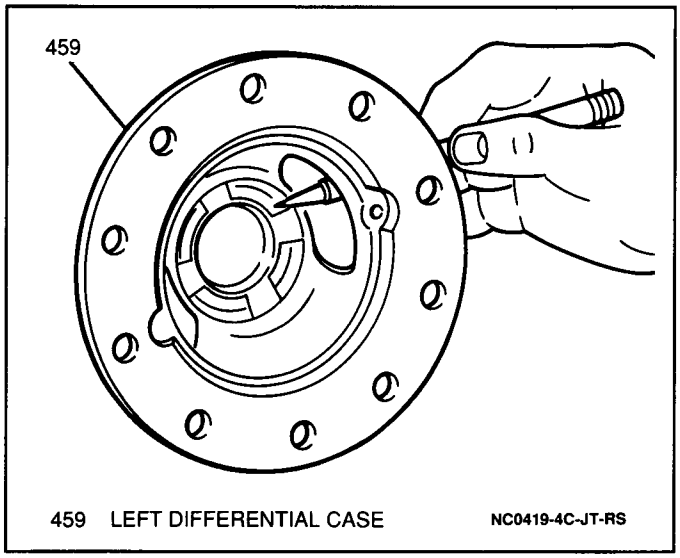

Figure 45 Inspecting Differential Case

Inspect

1. Differential carrier and case halves for cracks or stripped threads and repair or replace as necessary.
2. Ring and pinion gears for excessive or unusual wear, cracks, overheating or other damage and replace as necessary (Figure 46).

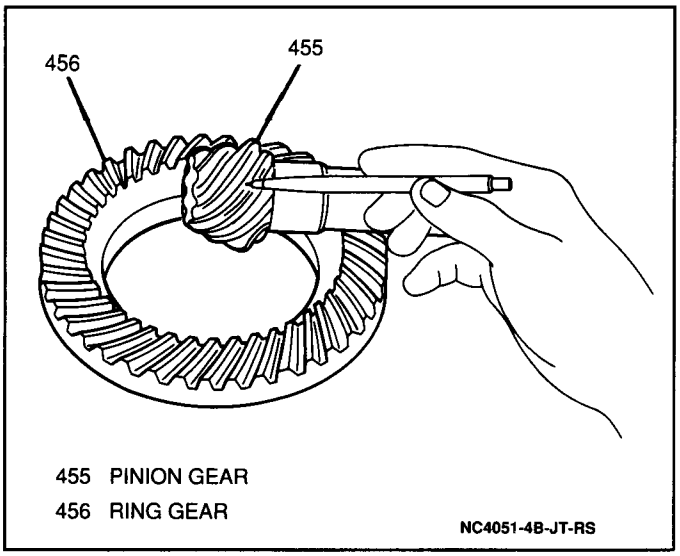

Figure 46 Inspecting Ring and Pinion Gears

3. All roller bearings and races for roughness, locking, or other wear or damage and replace as necessary.
4. Side and differential pinion gears for unusual wear or damage and replace as necessary.

Important

- Differential components are set to very close tolerances and prone to wear should one component fail. Therefore, to ensure accurate adjustment and even wear, the ring and pinion gears as well as all tapered roller bearings and races must be replaced as sets.

DIFFERENTIAL CARRIER ASSEMBLY

Figures 47 through 55

Install or Connect

Tools Required:
- J 3289-20 Holding Fixture Base
- J 3289-21 Holding Fixture
- J 37769 Differential Holding Fixture Adapters
- J 8614-01 Flange Holder
- J 24333 Side Bearing Installer
- J 8107-4 Differential Side Bearing Remover Plug
- J 8092 Driver Handle
- J 37758 Pinion Outer Race Installer
- J 37759 Pinion Inner Bearing Race Installer
- J 8001 Dial Indicator Set
- J 35138 Side Gear Thrust Play Tool

1. Differential pinion gears, washers and left side gear with selective washer into differential case (Figure 47).

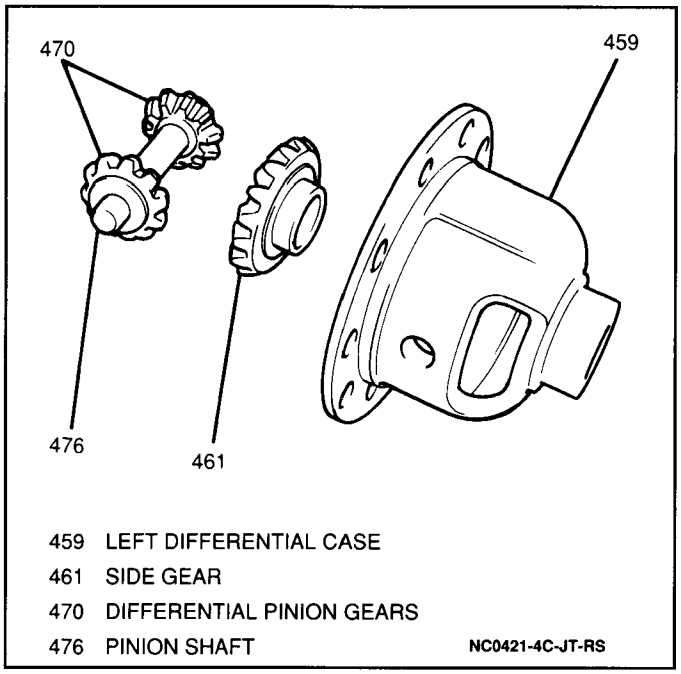

Figure 47 Installing Left Side Gear and Differential Pinion Gears

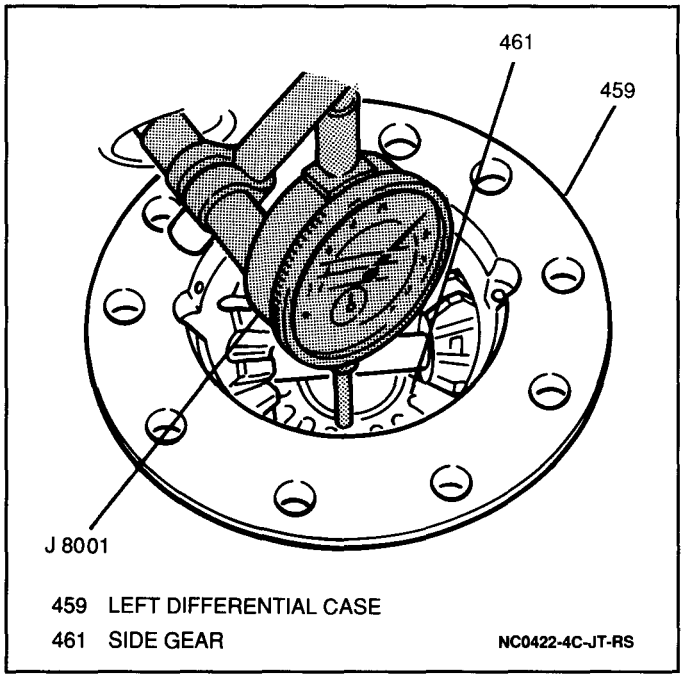

Figure 48 Measuring Side Gear End Play

Measure

- Left differential side gear end play using a J 8001 (Figure 48). Insert fingers through the bottom openings of the left differential case half and move the side gear up and down while observing the J 8001. Left side gear end play should measure 12 to 37 mm (0.005 to 0.014-inch). If left side gear end play is too high or low, replace the side gear selective washer with the appropriate size to obtain correct end play.

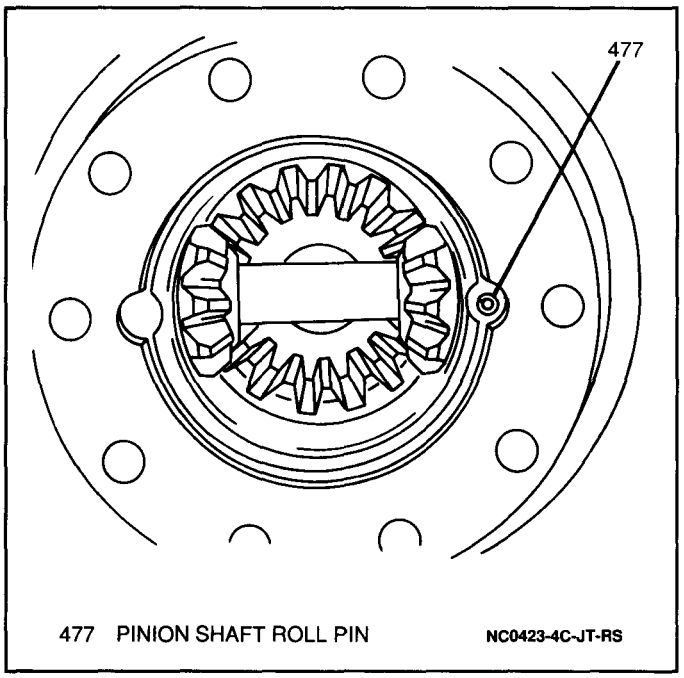

Figure 49 Pinion Shaft Roll Pin Installation

2. Pinion shaft roll pin into left differential case and through pinion shaft. Roll pin end should be even with the left differential case surface (Figure 49).
3. Right differential side gear and selective washer (Figure 50).

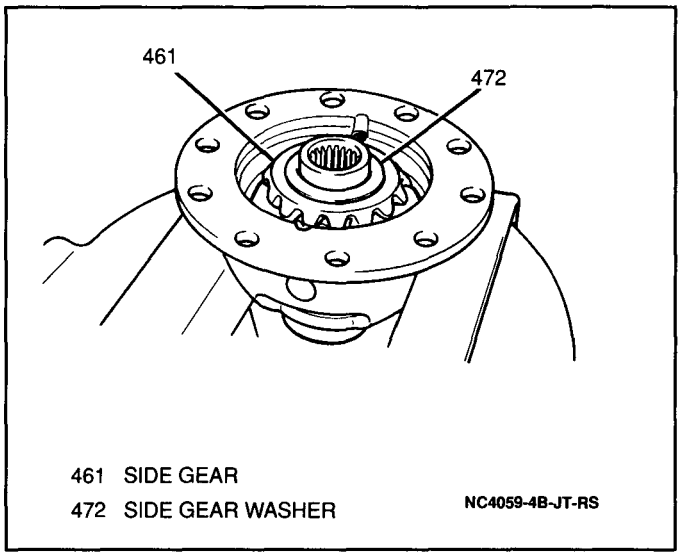

Figure 50 Right Side Gear Installation

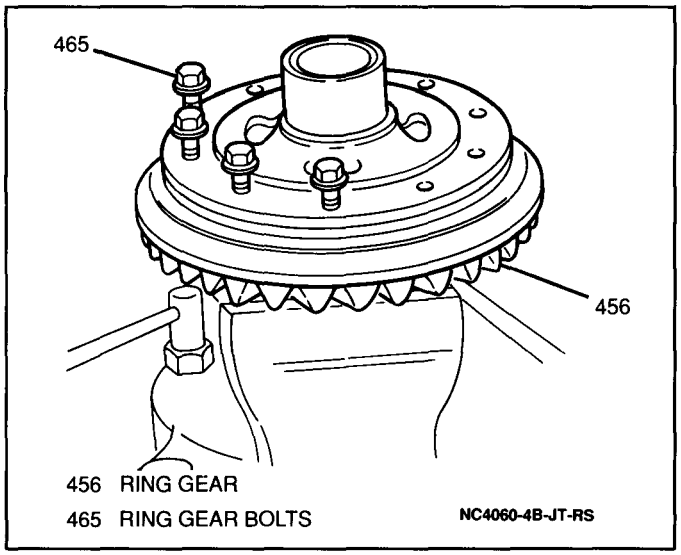

Figure 51 Installing Ring Gear Bolts

4. Right differential case half and ring gear to left differential case half; secure with ten bolts (Figure 51).

Tighten

- Ring gear bolts to 100 N·m (72 lb.ft.).

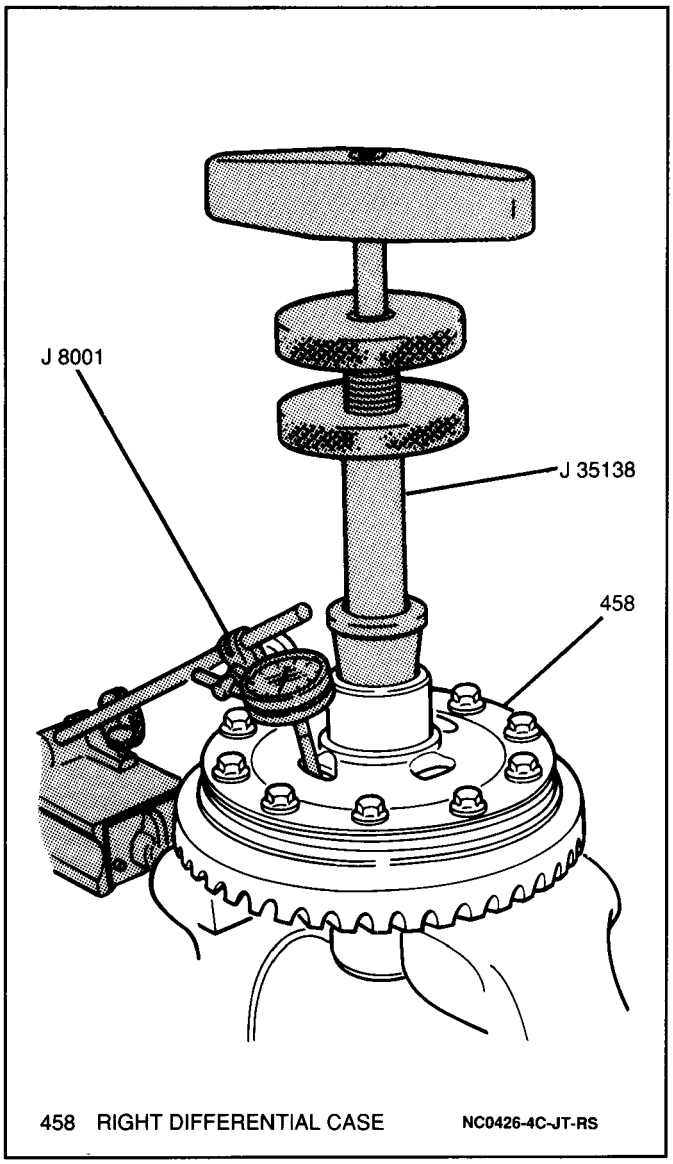

Figure 52 Measuring Side Gear End Play

Measure

- Side gear end play using a J 8001 and a J 35138 (Figure 52). Insert J 35138 in through the right drive axle differential case bore and adjust until the J 35138 has a firm grasp on the side gear. Then, move the J 35138 up and down while observing the J 8001. Side gear end play should measure 12 to 37 mm (0.005 to 0.014-inch). If side gear end play is too high or low, replace the side gear selective washer with the appropriate size to obtain correct end play.

Important

- After correct end play has been obtained, remove the ring gear bolts and apply Loctite 414 GM P/N 12345093, or equivalent, to the threaded portion of each ring gear bolt and install into differential case.

Tighten

- Ring gear bolts to 100 N·m (72 lb.ft.).

5. Side bearing on the left side of the differential case assembly using a J 37758 with a J 8092 (Figure 53). Place the differential case assembly on a hydraulic press and using a J 37758 with a J 8092, place the left differential side bearing on the left differential case with the tapered side up and slowly press the left differential side bearing onto the left differential case.

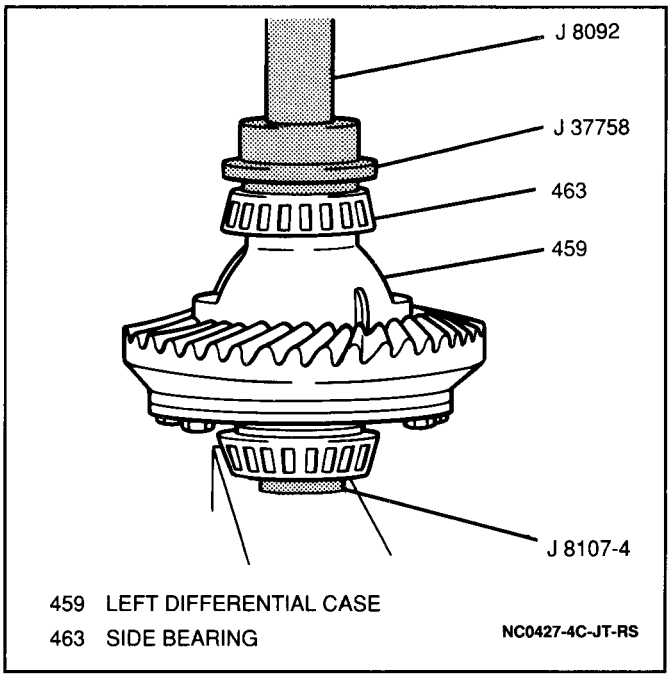

Figure 53 Installing Side Bearing

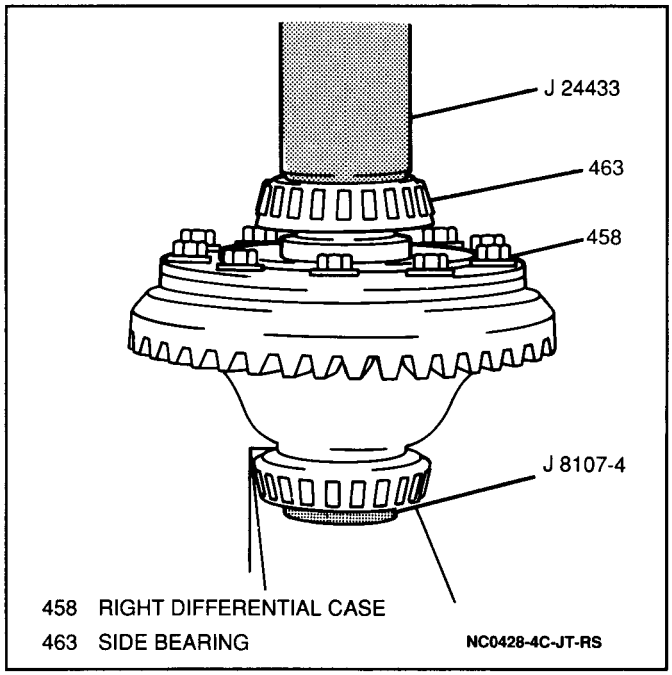

Figure 54 Installing Side Bearing

6. Side bearing on the right side of the differential case assembly using a J 24433 with a J 8092 and a J 8107-4 (Figure 54). Place the differential case assembly on a hydraulic press using a J 8107-4 for support and to protect the left differential side bearing. Then, using a J 24433 with a J 8092, place the right differential side bearing on the right differential case with the tapered side up and slowly press the right differential side bearing onto the right differential case.
7. Inner pinion bearing race into the differential carrier using a J 37759 with a J 8092 (Figure 55). Place the differential carrier on a hydraulic press and position the inner pinion bearing race over its bore. Then, using a J 37759 with a J 8092, slowly press the inner pinion bearing race evenly into the differential carrier.

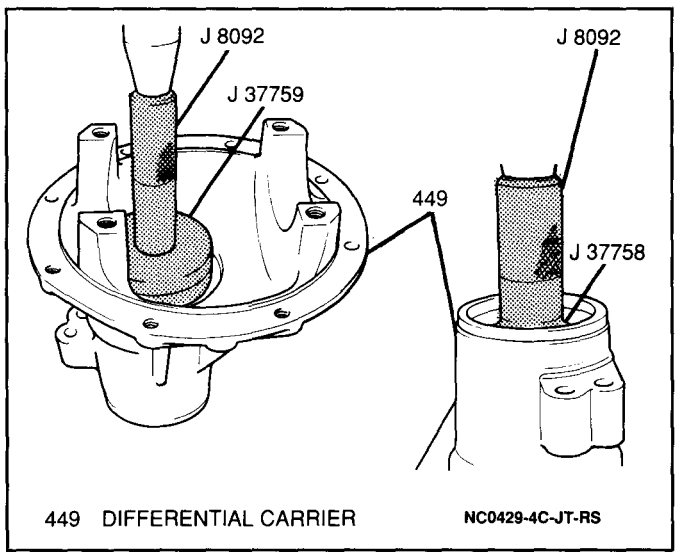

Figure 55 Installing Inner and Outer Pinion Bearing Races

8. Outer pinion bearing race into the differential carrier using a J 37758 with a J 8092 (Figure 55). Place the differential carrier on a hydraulic press and position the outer pinion bearing race over its bore. Then, using a J 37758 with a J 8092, slowly press the outer pinion bearing race evenly into the differential carrier.

Setting Pinion Depth

Pinion depth (the distance from the face of the face of the pinion gear to the center line of the ring gear) is critical to all differentials. Each ring and pinion gear set is matched so as to produce the best tooth contact pattern. Pinion depth is controlled by placing the proper selective shim between the pinion gear and inner bearing. Pinion depth is set with a J 21777-B pinion setting gage set which provides a "nominal" or "0" as a gaging reference to find the pinion center. If the original ring and pinion gears and pinion bearings are reused, the original size selective shim will set the proper pinion depth.

Pinion Depth Setting Procedure

Figures 56 through 64

Tools Required:
- J 3289-20 Holding Fixture Base
- J 3289-21 Holding Fixture
- J 37769 Differential Holding Fixture Adapters
- J 8001 Dial Indicator Set*
- J 23597-1 Arbor*
- J 23597-12 Pilot Washer*
- J 21777-42 Pilot Washer*
- J 21777-43 Stud Assembly*
- J 21777-101 Side Bearing Discs*
- J 21777-102 Gage Plate*
- * Included in J 21777-B Pinion Setting Gage Kit

1. Lubricate both inner and outer pinion bearings with wheel bearing lubricant GM P/N 1051344, or equivalent.
2. Place both inner and outer pinion bearings into the differential carrier and install a J 21777-102, a J 23597-12, a J 21777-43 and a J 21777-42 (Figures 56, 57 and 58).

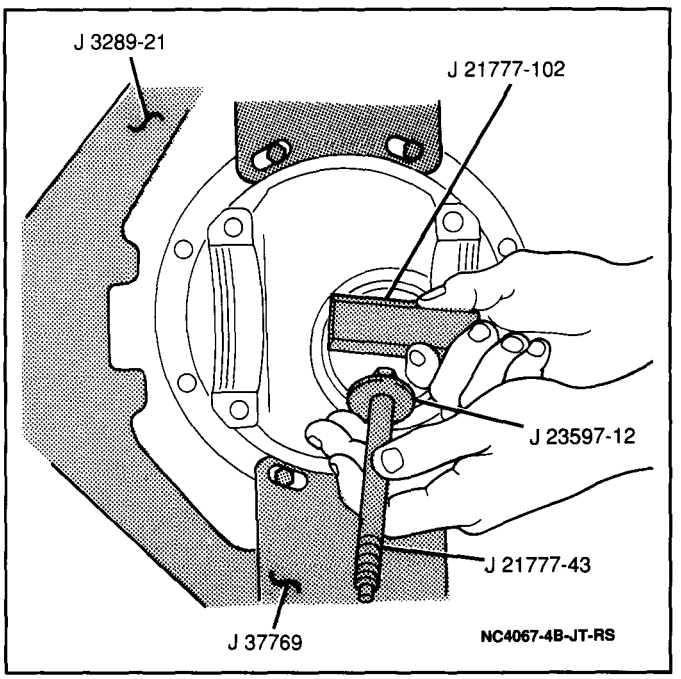

Figure 56 Assembling Gage Plate and Stud Assembly

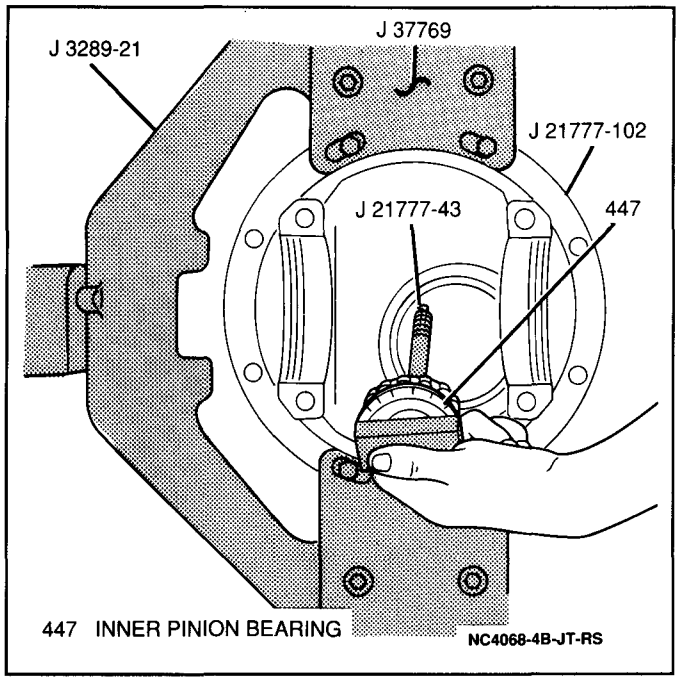

Figure 57 Installing Inner Pinion Bearing With Gage Plate and Stud Assembly

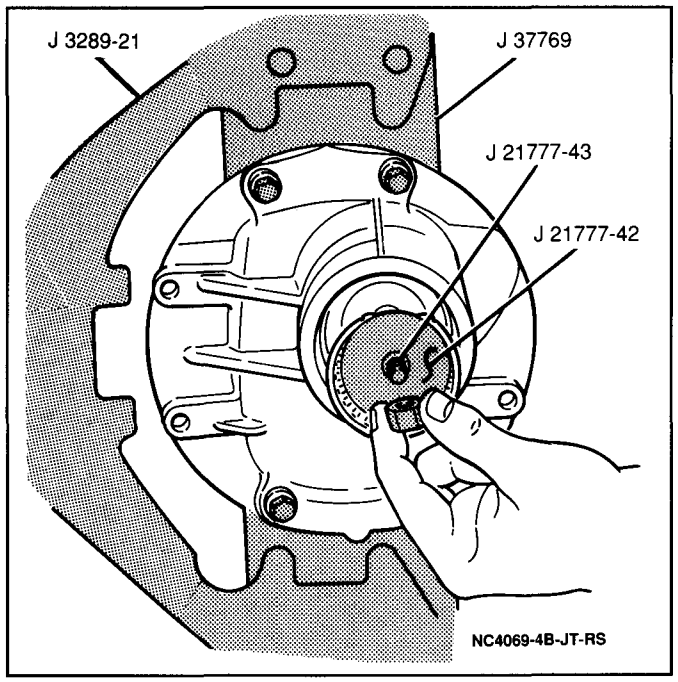

Figure 58 Installing Outer Pinion Bearing, Pilot Washer and Nut

3. Hold the J 21777-43 stationary.

Tighten

- J 21777-43 jam nut to 2 N·m (18 lb.in.) (Figure 59).

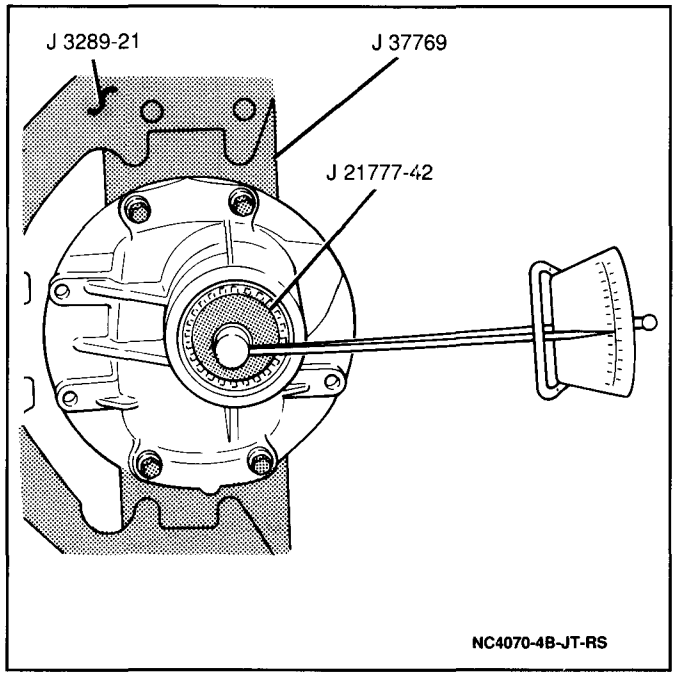

Figure 59 Adjusting Jam Nut Torque

4. Rotate the J 21777-102 25 revolutions to make sure the pinion bearings are fully seated.

Tighten

- J 21777-43 jam nut to 2 N·m (18 lb.in.).

5. Install the J 21777-101 in the side bearing bores with a J 23597-1 through both of the J 21777-101 (Figure 60).

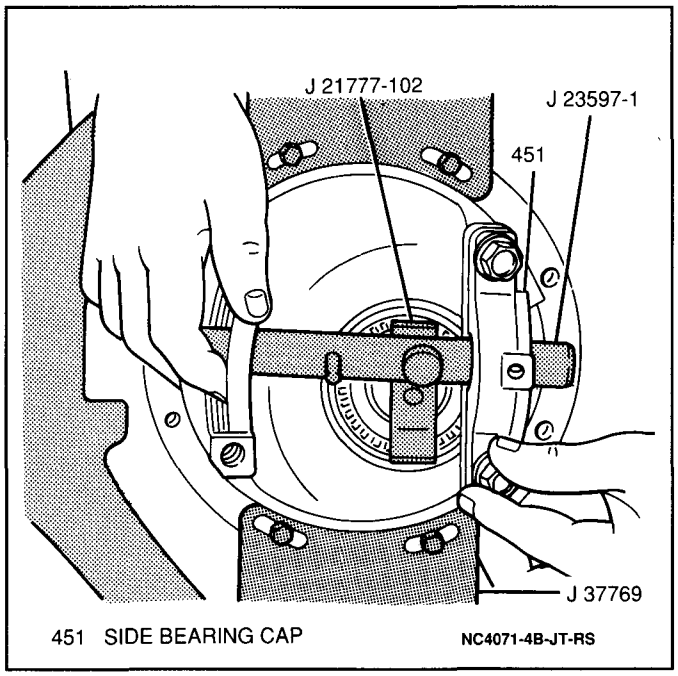

Figure 60 Installing Side Bearing Discs and Arbor

6. Rotate the J 21777-102 until both gage levels are parallel with the J 21777-101.
7. Install the dial indicator spring loaded plunger extension through the J 23597-1 and position over the 97 mm level of the J 21777-102.

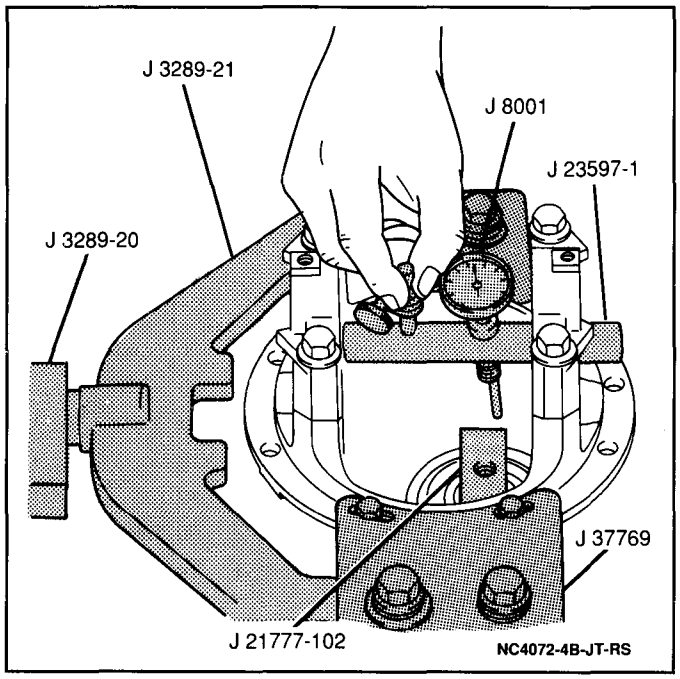

Figure 61 Installing Dial Indicator

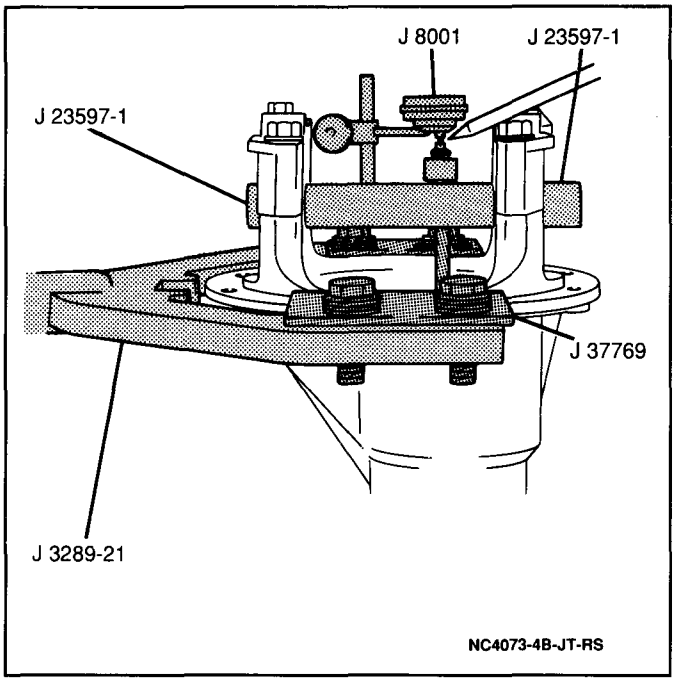

Figure 62 Setting Dial Indicator Position

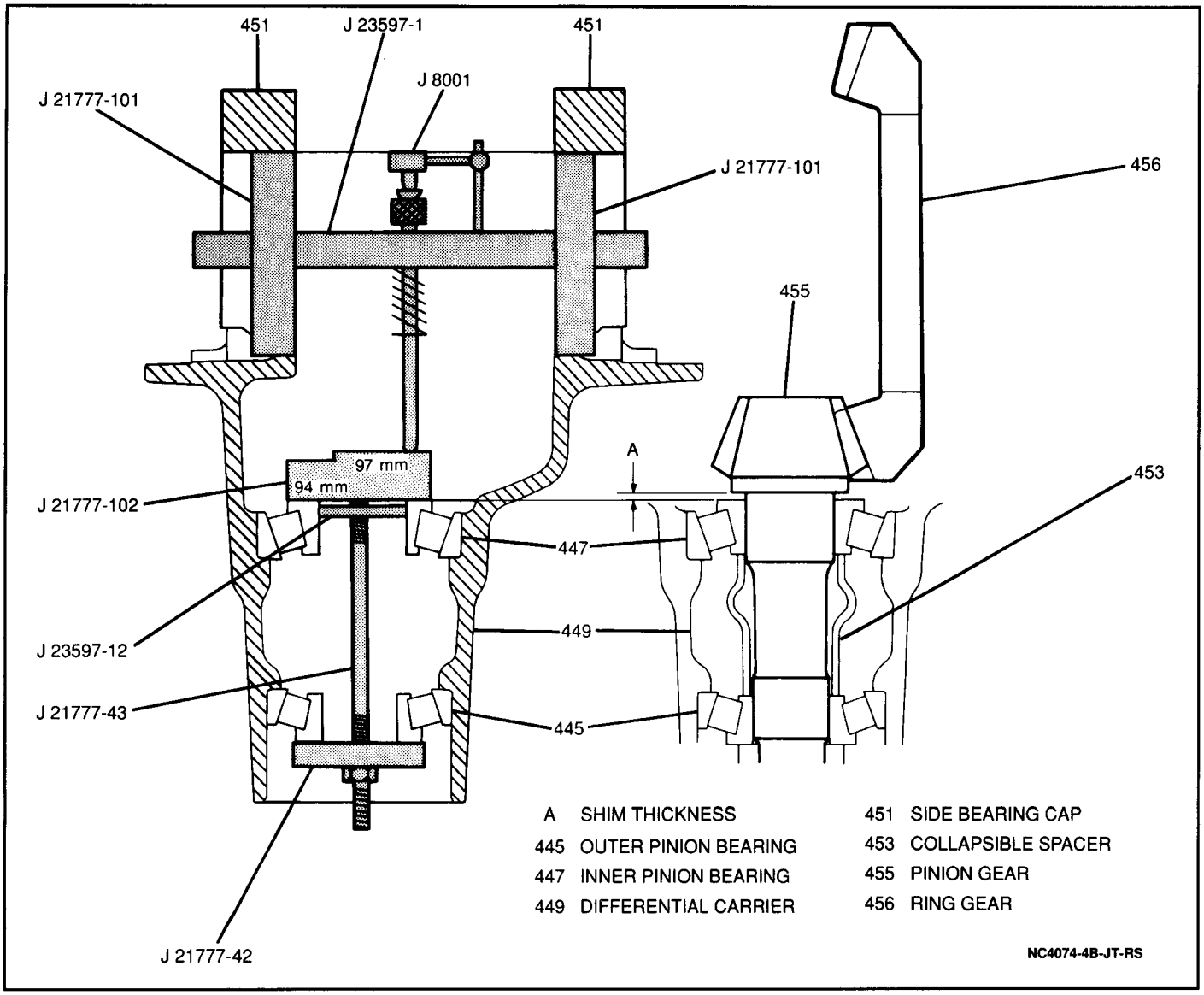

Figure 63 Special Tool Assembly For Measuring Pinion Depth

8. Install a J 8001 to the J 23597-1 and position the J 8001 plunger over the spring loaded plunger extension and slightly load the J 8001.
9. Rotate the J 8001 adjustable face so that the needle indicates 0.
10. Slowly rotate the J 23597-1 back and forth so that the spring loaded plunger extension sweeps back and forth across the J 21777-102 while observing the J 8001.
11. Stop the J 23597-1 at the J 8001 greatest point of deflection.
12. Without disturbing the J 8001 needle setting, rotate the J 8001 adjustable face so that the needle indicates 0.
13. Slowly rotate the J 23597-1 until the spring loaded plunger extension is no longer making contact with the J 21777-102.
14. Record the deflection reading on the J 8001.

Important

- This reading indicates the selective shim required for the correct pinion depth. Refer to the "Pinion Depth Selective Shims" chart for the appropriate shim size.

PART NUMBER	AVAILABLE SHIM THICKNESSES mm	in.
96057678	0.30	0.012
96057667	1.00	0.039
96057668	1.03	0.041
96057669	1.06	0.042
96057670	1.09	0.043
96057671	1.12	0.044
96057672	1.15	0.045
96057673	1.18	0.046
96057674	1.21	0.047
96057675	1.24	0.048
96057676	1.27	0.049
96057677	1.30	0.050

NC4075-4B-JT-RS

Figure 64 Pinion Depth Selective Shims

15. Remove the J 8001 and spring loaded plunger extension from the J 23597-1.
16. Remove the J 23597-1 and the two J 21777-101 from the differential carrier.
17. Remove the J 21777-102, the J 23597-12, the J 21777-43 and the J 21777-42 from the differential carrier.
18. Remove both inner and outer pinion bearings from the differential carrier.

Setting Pinion Bearing Preload

Figures 65 through 69

Install or Connect

Tools Required:
- J 3289-20 Holding Fixture Base
- J 3289-21 Differential Holding Fixture
- J 37769 Differential Holding Fixture Adapters
- J 6133-01 Pinion Bearing Installer
- J 25273 Pinion Seal Installer
- J 8614-01 Flange Holder

1. Appropriate pinion selective shim onto the pinion gear shaft.
2. Inner pinion bearing onto the pinion gear shaft using a J 6133-01 (Figure 65). Place the pinion gear on a hydraulic press and install the inner pinion bearing on the pinion gear shaft with the tapered side facing away from the pinion gear. Then, place the J 6133-01 on the pinion gear shaft and slowly press the inner pinion bearing into place.

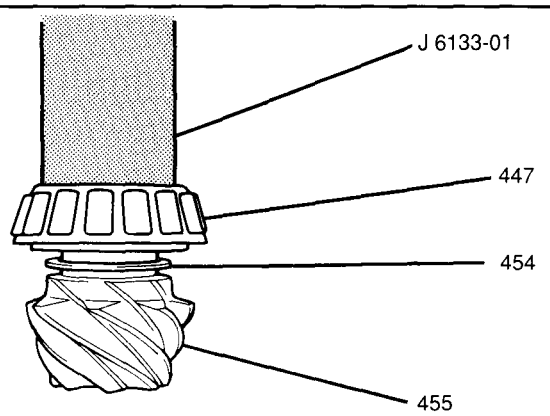

447 INNER PINION BEARING
454 PINION SELECTIVE SHIM
455 PINION GEAR

NC4076-4B-JT-RS

Figure 65 Installing Inner Pinion Bearing

3. New collapsible spacer onto the pinion gear shaft with the short shank toward the pinion gear.
4. Outer pinion bearing and pinion gear into differential carrier (Figure 66).

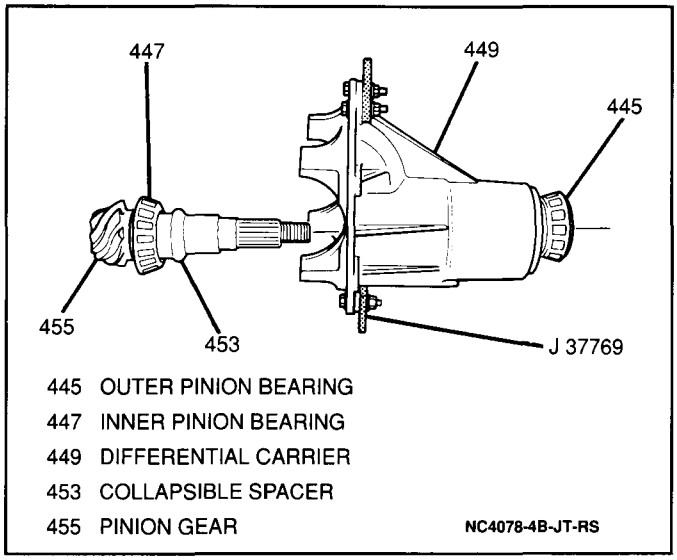

Figure 66 Installing Pinion Gear and Outer Pinion Bearing

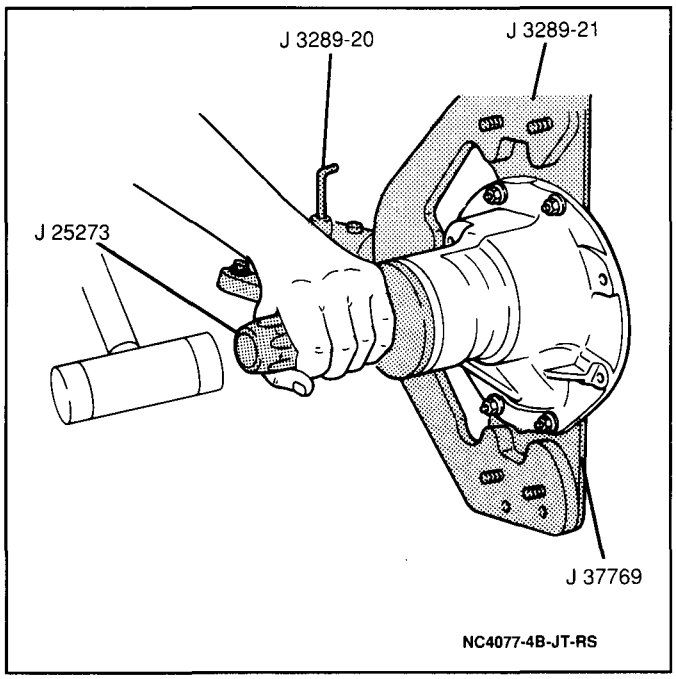

Figure 67 Installing Pinion Oil Seal

5. New pinion oil seal into differential carrier using a J 25273 (Figure 67).
- Apply wheel bearing lubricant GM P/N 1051344, or equivalent to the new pinion oil seal lip.
6. Pinion flange onto pinion gear; secure with pinion flange nut. Do not tighten fully.

Important

- Use caution not to overtighten the pinion flange nut when adjusting bearing preload. Tighten the pinion flange nut gradually while taking frequent pinion bearing preload measurements with a torque wrench. If the pinion flange nut is overtightened, the collapsible spacer will crush requiring a new collapsible spacer before pinion bearing preload can be properly adjusted.

Adjust

Tool Required:
J 8614-01 Flange Holder

- Pinion bearing preload using a J 8614-01 to hold the pinion flange stationary while tightening the pinion flange nut. Tighten the nut gradually in increments of 5 N·m (44 lb.in.). Between each increment of tightening, remove the J 8614-01, rotate the pinion gear 5 revolutions in order to ensure pinion bearing seating and measure pinion bearing preload.

Measure

- Pinion bearing preload using a torque wrench. The pinion gear should require 1.2 N·m (11 lb.in.) of torque in order to rotate. If pinion bearing preload is less than specified, repeat the adjustment procedure until proper pinion bearing preload has been attained (Figure 68).

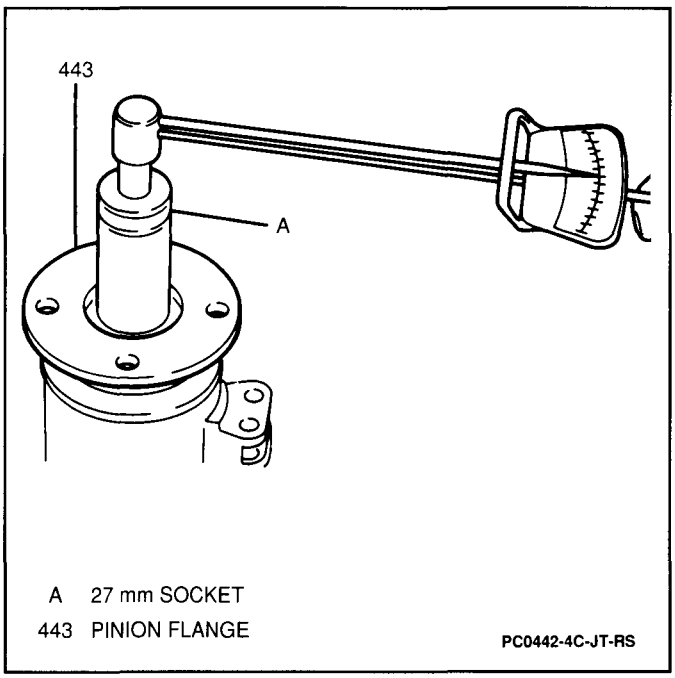

Figure 68 Measuring Pinion Bearing Preload

- Stake the pinion flange nut.
7. Differential side bearing races onto the differential side bearings.
8. Differential assembly into the differential carrier (Figure 69).

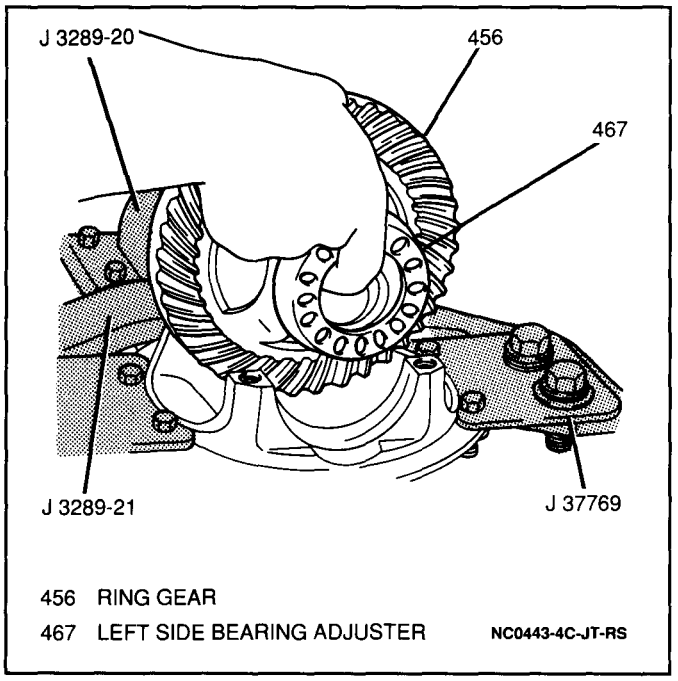

Figure 69 Installing Differential Assembly Into Differential Carrier

9. Both side bearing adjusters onto the side bearing races.
10. Both side bearing caps onto differential carrier; secure with four side bearing cap bolts.

Important

- Make sure the right and left side bearing caps are in their correct positions according to the marks made during disassembly. The right side bearing cap is on the ring gear side of the carrier. The left side bearing cap is on the pinion gear side of the carrier. DO NOT tighten the side bearing cap bolts to specification until side bearing preload and differential backlash have been correctly adjusted. Tightening the side bearing cap bolts to the specification below will facilitate the required adjustments.

Tighten

- Differential side bearing cap bolts to 40 N·m (30 lb.ft.).

Side Bearing Preload and Backlash Adjustment

Side bearing preload is necessary to maintain the correct bearing pressure on both sides of the differential case so that the differential case will turn evenly at all speeds. Side bearing preload is measured by the distance between the side bearing caps or case spread. Once the differential side bearing preload has been adjusted, it must be maintained throughout the differential backlash adjustment procedure.

Setting differential backlash is very important to the service life of the ring and pinion gears. Setting differential backlash determines the amount of depth at which the ring gear will contact the pinion gear. This determines the distance of the pinion gear teeth from the drive side and the coast side of the ring gear teeth. The deeper the gears mesh, the less the amount of backlash. The more shallow the mesh, the more backlash is created. This adjustment is vital for correct differential operation.

Side Bearing Preload Adjustment Procedure

Figures 70 and 71

Tools Required:
- J 3289-20 Holding Fixture Base
- J 3289-21 Holding Fixture
- J 37769 Differential Holding Fixture Adapters
- J 37760 Spanner Wrench
- J 8001 Dial Indicator Set

1. Loosen the left differential side bearing adjuster using a J 37760 until it no longer makes contact with the left differential side bearing race (Figure 70).

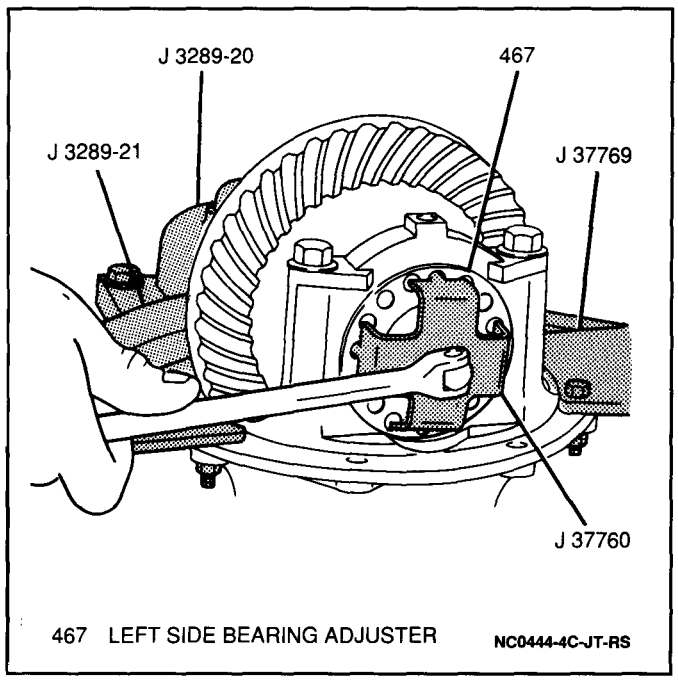

Figure 70 Loosening Left Side Bearing Adjuster

2. Tighten the right differential side bearing adjuster using a J 37760 until the ring gear is fully engaged with the pinion gear (0.000 backlash).

Inspect

1. The left adjuster making sure it is not making contact with the left differential side bearing race.
2. Pinion gear for binding by grasping the pinion flange and rotating the pinion gear several times.

3. Install a J 8001 on the differential carrier between the center of each side bearing cap and load slightly to measure case spread (Figure 71).

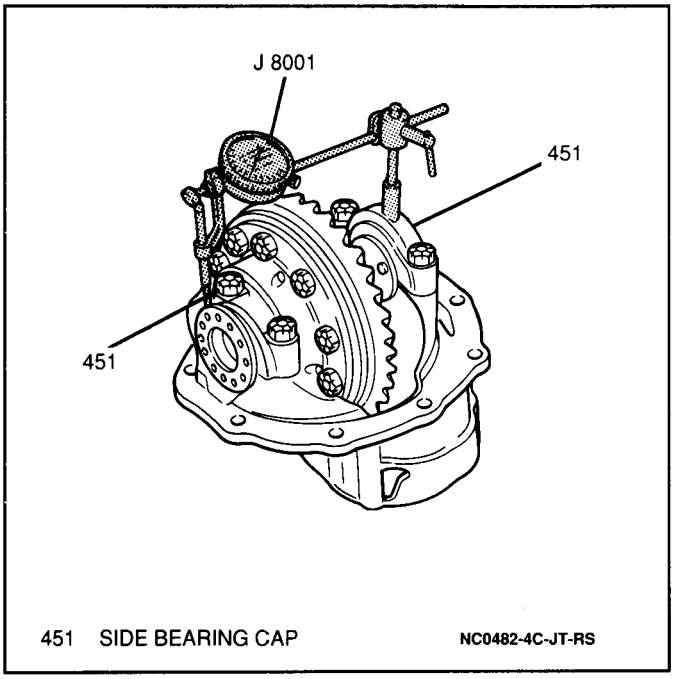

Figure 71 Measuring Case Spread Between Side Bearing Caps

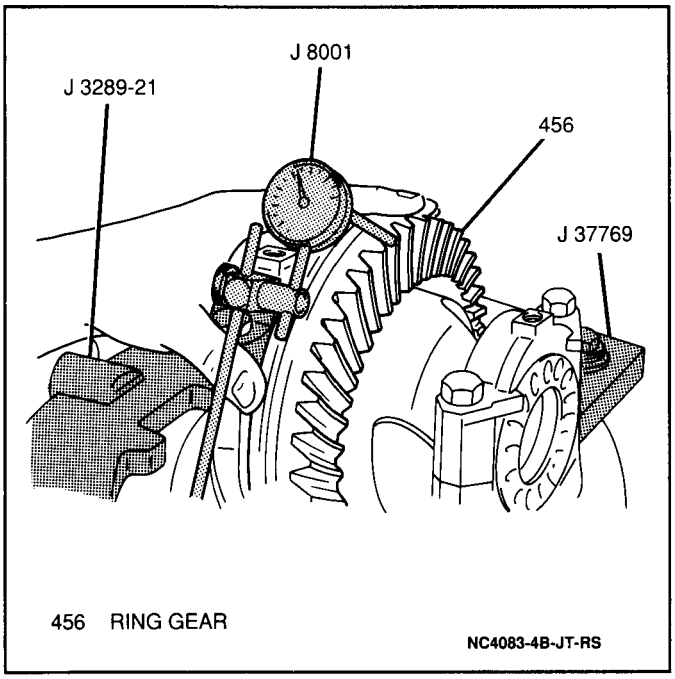

Figure 72 Installing Dial Indicator

4. Tighten the left differential side bearing adjuster using the J 37760 until the adjuster makes contact with the right side bearing race.
5. Rotate the J 8001 adjustable face so that the needle indicates 0.

Adjust

- Side bearing preload by tightening the left differential side bearing adjuster using the J 37760 until the J 8001 reads 0.0508 to 0.1524 mm (0.002 to 0.006-inch). This specification indicates the amount of case spread between the centers of both side bearing caps.

Backlash Adjustment Procedure

Figures 72 and 73

Tools Required:
- J 3289-20 Holding Fixture Base
- J 3289-21 Holding Fixture
- J 37769 Differential Holding Fixture Adapters
- J 37760 Spanner Wrench
- J 8001 Dial Indicator Set

1. Install a J 8001 to the differential carrier with the dial indicator plunger against a ring gear tooth (Figure 72).
2. While holding the pinion gear stationary, move the ring gear back and forth as far as it will travel without turning the pinion gear.
3. Observe the J 8001 while moving the ring gear back and forth as described in Step 2. Differential backlash should be within 0.203 to 0.381 mm (0.008 to 0.015-inch). If differential backlash is above specification, loosen the left side bearing adjuster approximately 1/4 turn and tighten the right side bearing adjuster approximately 1/4 turn using the J 37760. This will move the ring gear closer to the pinion gear causing a tighter mesh and less backlash. If differential backlash is below specification, loosen the right side bearing adjuster approximately 1/4 turn and tighten the left side bearing adjuster approximately 1/4 turn using the J 37760. This will move the ring gear away from the pinion gear causing a looser mesh and more backlash. Use this procedure until the most accurate differential backlash is obtained.

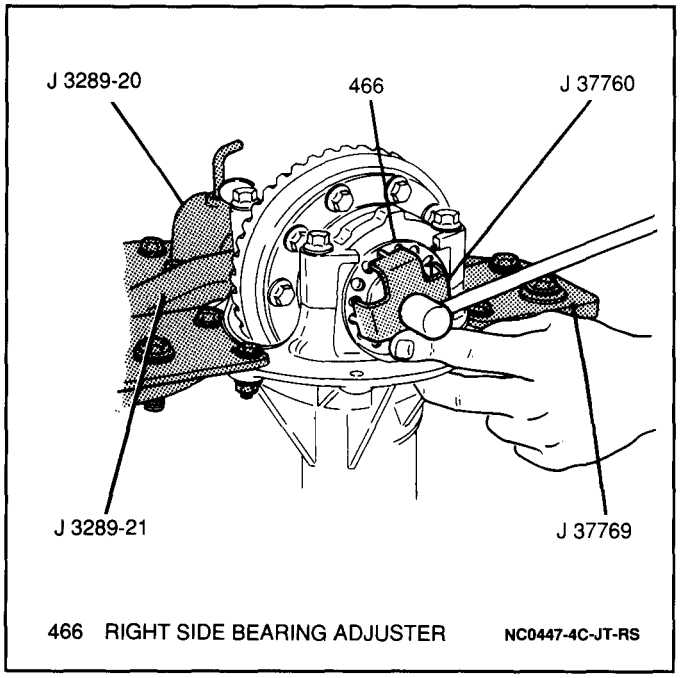

Figure 73 Adjusting Differential Backlash

Important

- In order to preserve differential side bearing preload, any time a side bearing adjuster is loosened, the other adjuster MUST be tightened the same amount. The last motion of this adjustment must be in a tightening direction.

Tighten

- Differential side bearing cap bolts to 70 N·m (51 lb.ft.).

4. Install both side bearing lock plates; secure with two bolts.

Tighten

- Both side bearing lock plate bolts to 15 N·m (10 lb.ft.).

Ring and Pinion Contact Pattern Checking Procedure

Figures 74, 75 and 76

1. Apply a light coating of gear marking compound GM P/N 1052351, or equivalent, to all ring gear teeth not making contact with the pinion gear.

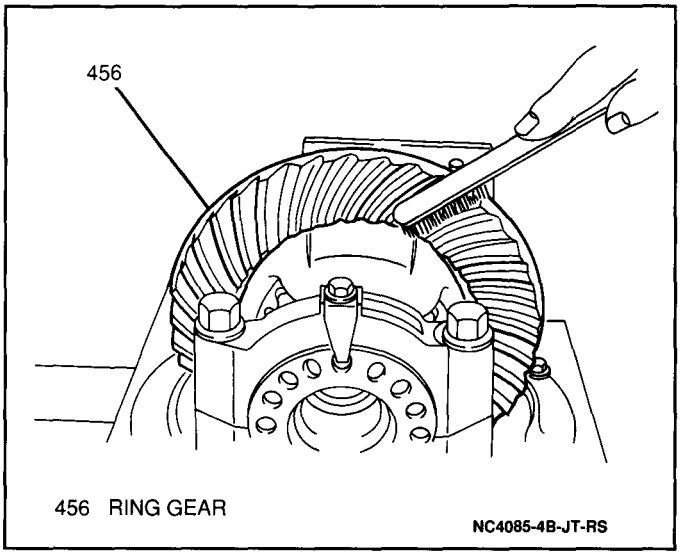

Figure 74 Applying Gear Marking Compound

2. Insert a standard drift punch between the ring gear and the differential carrier to bind the ring gear and create a drag.
3. Slowly and evenly turn the pinion gear in the drive direction until the ring gear has made one complete revolution. Because of the drag simulated on the ring gear, this will produce a contact pattern on the drive side of the ring gear (pinion gear driving ring gear).

Important

- In order to ensure an accurate contact pattern, make sure the ring gear turns one revolution only.

4. Turn the pinion gear in the opposite direction with drag simulated on the ring gear to produce a contact pattern on the coast side of the ring gear (ring gear driving pinion gear).

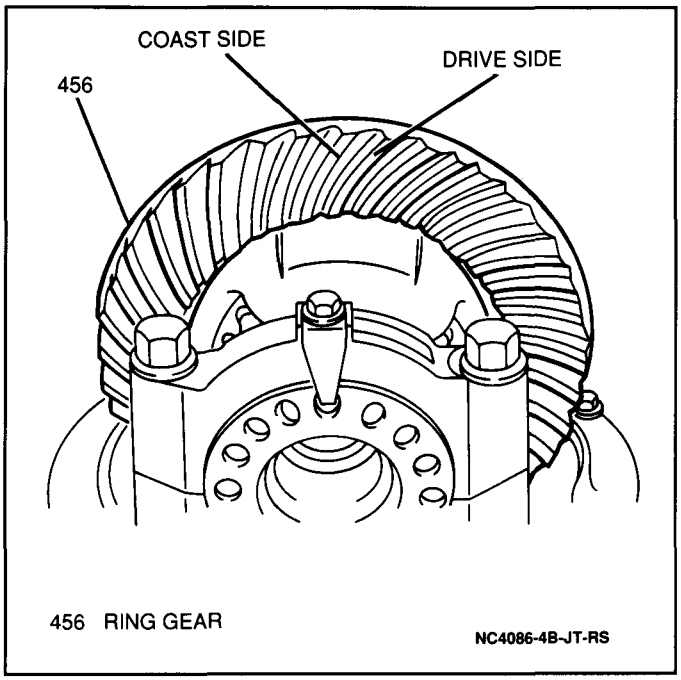

Figure 75 Checking Ring Gear Contact Pattern

The drive side of the ring gear teeth are concave and the coast side of the ring gear teeth are convex (Figure 75). The contact pattern should be even around the ring gear. Uneven contact around the ring gear indicates excessive ring gear runout. The drive pattern should be centrally located between the top and bottom of the ring gear teeth. Under an increased load, the pattern spreads out and tends to move toward the heel of the tooth. To compensate for this, the contact pattern can be somewhat closer to the toe. Under heavy loading conditions, up hill or rapid acceleration, the pattern may extend almost the full distance from toe to heel. Use the "Gear Contact Patterns" chart to determine if a correct contact pattern exists (Figure 76). If excessive contact pattern error is present with the proper backlash specification, check the pinion gear for the proper selective shim.

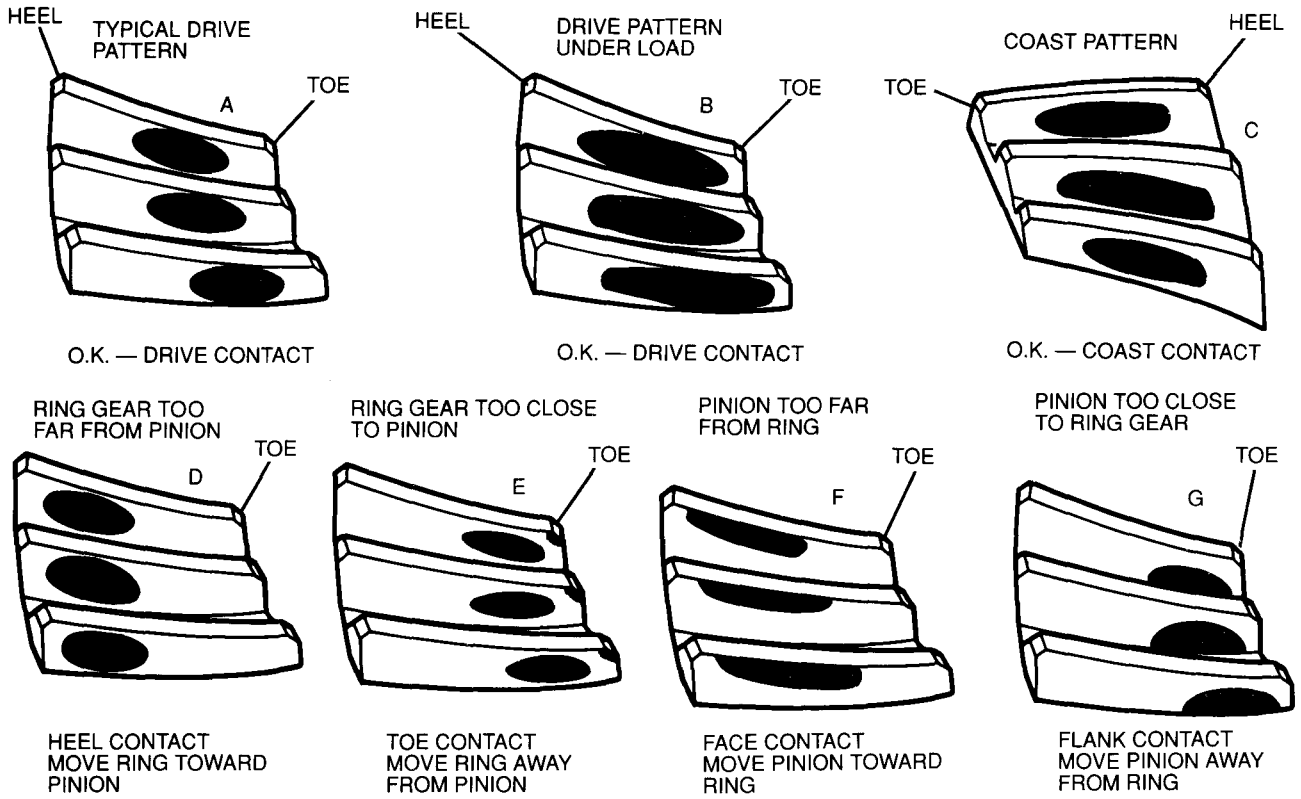

OUTER END DRIVE SIDE DRIVE ON FRONT DIFF. COAST SIDE COAST ON FRONT DIFF. INNER END	NORMAL CONTACT		OFFSET COAST AND DRIVE PATTERN REPLACE DIFFERENTIAL CARRIER
	HIGH CONTACT PINION DEPTH IS TOO SHALLOW. INCREASE PINION SELECTIVE SHIM SIZE		ERRATIC CONTACT PATTERNS 1. INSPECT PINION GEAR FOR PROPER SEATING 2. REPLACE RING AND PINION GEAR SET 3. REPLACE DIFFERENTIAL CARRIER
	LOW CONTACT PINION DEPTH IS TOO DEEP. DECREASE PINION SELECTIVE SHIM		INSUFFICIENT CONTACT PATTERNS 1. REPLACE RING AND PINION GEAR SET 2. REPLACE DIFFERENTIAL CASE

NC0487-4B-JT-RS

Figure 76 Gear Contact Patterns

SPECIFICATIONS

FASTENER TORQUES

Front Axle Housing Oil Level/Filler Plug	45 N·m (33 lb.ft.)
Front Axle Housing Drain Plug	23 N·m (17 lb.ft.)
Front Skid Plate Bolts	54 N·m (40 lb.ft.)
Lower Ball Joint Bolts and Nuts	85 N·m (63 lb.ft.)
Locking Hub Cover Bolts	25 N·m (18 lb.ft.)
Left Differential-Side Joint Bolts and Nuts	60 N·m (43 lb.ft.)
Differential Carrier Bolts	23 N·m (17 lb.ft.)
Front Axle Housing Left Mount Bracket Bolts	60 N·m (43 lb.ft.)
Front Axle Housing Right Mount Bracket Bolts	60 N·m (43 lb.ft.)
Front Axle Housing Center Mount Bolts and Nuts	60 N·m (43 lb.ft.)
Front Propeller Shaft Bolts and Nuts	60 N·m (43 lb.ft.)
Ring Gear Bolts	100 N·m (72 lb.ft.)
Differential-Side Bearing Cap Bolts	70 N·m (51 lb.ft.)
Side Bearing Lock Plate Bolts	15 N·m (11 lb.ft.)

FRONT AXLE SPECIFICATIONS

Differential Side Gear End Play	12 to 37 mm (0.005 to 0.014 in.)
Differential Side Gear Preload (Case Spread)	0.0508 to 0.1524 mm (0.002 to 0.006 in.)
Differential Backlash	0.203 to 0.381 mm (0.008 to 0.015 in.)
Pinion Bearing Preload Starting Torque	1.2 N·m (11 lb.in.)

FRONT AXLE HOUSING OIL CAPACITY (APPROXIMATE)

Front Axle Housing Drain and Refill	1.0 liters (1.8 pts.)
Oil Recommended	Synthetic 75W-90 GL4 Lubricant GM P/N 12345871, or equivalent

SERVICE PARTS INFORMATION

Component Name Used in Section 4C	Reference Name in Service Parts Catalog	Group Number
Front Axle Housing	Housing, Front Axle	5.505
Front Axle Housing Oil Level/Filler Plug	Plug, Front Axle Oil Level	5.400
Front Axle Housing Drain Plug	Front Axle Oil Drain	5.400
Left Inner Axle Shaft	Shaft, Front Axle	6.055
Left Inner Axle Shaft Bearing	Bearing, Front Axle Outer Shaft	6.008
Left Inner Axle Shaft Bearing Snap Ring	Circlip, Front Axle Outer Bearing	6.008
Left Inner Axle Shaft Oil Seal	Seal, Front Axle Shaft Oil	6.008
Right Drive Axle Shaft Oil Seal	Seal, Front Axle Shaft Oil	6.008
Right Drive Axle Shaft	Shaft ASM, Front Drive Axle RH	6.055
Left Drive Axle Shaft	Shaft ASM, Front Drive Axle LH	6.055
Differential-Side Joint	Joint ASM, Front Drive Axle Shaft Differential Side	6.060
Wheel-Side Joint	Joint ASM, Front Drive Axle Wheel Side	6.060
Differential-Side Boot	Boot Kit, Front Drive Axle Shaft Differential Side	6.061
Differential-Side Boot Band	Clamp, Front Drive Axle Shaft Differential Side Joint	6.061
Differential-Side Shaft Boot Band	Clamp, Front Drive Axle Wheel Side Boot	6.061
Differential-Side Joint Snap Ring	Ring, Front Drive Axle Shaft Differential Joint Side	6.061
Wheel-Side Boot	Boot Kit, Front Drive Axle Wheel Side	6.061
Wheel-Side Boot Band	Clamp, Front Drive Axle Wheel Side Boot	6.061
Wheel-Side Shaft Boot Band	Clamp, Front Drive Axle Wheel Side Boot	6.061
Locking Hub Assembly	Hub ASM, Front Drive Axle Locking	6.308
Drive Axle Snap Ring	Circlip, Front Drive Axle Shaft	6.326
Drive Axle Spindle Washer	Washer, Front Drive Axle Spindle Thrust	6.063
Front Skid Plate	Shield ASM, Steering Linkage (skid plate)	6.059
Left Differential-Side Joint Bolt	Bolt, Front Axle Shaft End	6.056
Center Mount Bracket Bolt	Bolt, Front Axle Mounting Upper Bracket	5.500
Front Axle Housing Breather Hose	Hose, Front Axle Breather	5.387
Breather Hose Clamp	Clamp, Front Axle Housing Breather Hose	5.387
Breather Hose Connector	Union, Front Axle Breather	5.387
Right Mount Bracket	Bracket, Front Axle Mounting RH	5.500
Right Mount Bracket Bolt	Bolt, Front Axle Mounting Front Bracket	5.500

Left Mount Bracket	Bracket, Front Axle Mounting LH	5.500
Left Mount Bracket Bolt	Bolt, Front Axle Mounting Front Bracket	5.500
Differential Carrier	Carrier ASM, Front Axle Differential	5.505
Differential Carrier Bolt	Bolt, Front Axle Carrier Mounting	5.398
Pinion Flange Nut	Nut, Front Axle Universal Flange	5.595
Pinion Flange Washer	Washer, Front Axle Flange Nut	5.595
Pinion Flange	Flange, Front Axle Universal Joint.	5.545
Pinion Seal	Seal, Front Axle Pinion Oil	5.387
Outer Pinion Bearing	Bearing, Front Axle Pinion Outer	5.447
Inner Pinion Bearing	Bearing Front Axle Pinion Inner	5.447
Differential Side Bearing Cap Bolt	Bolt, Front Axle Carrier Differential Cap	5.505
Collapsible Spacer	Spacer, Front Axle Drive Pinion	5.453
Pinion Selective Shim	Shim, Front Axle Drive Pinion	5.460
Ring and Pinion Set	Gear Kit, Front Bevel Pinion	5.529
Right Differential Case	Case, Front Axle Differential RH	5.510
Left Differential Case	Case, Front Axle Differential LH	5.510
Differential Side Gear	Gear, Front Axle Differential Side	5.528
Selective Washer	Washer, Differential Side Gear	5.528
Differential Side Bearing	Bearing, Front Axle Differential Side Gear	5.536
Ring Gear Bolts	Bolt, Front Axle Differential Case	5.531
Side Bearing Adjuster	Adjuster, Front Axle Side Gear Bearing	6.008
Side Bearing Lock Plate	Plate, Front Axle Differential Side Gear Bearing Lock	6.058
Side Bearing Lock Plate Bolt.	Bolt, Front Axle Side Gear Bearing Lock Plate	6.058
Differential Pinion Gear	Gear, Front Axle Differential Pinion	5.526
Differential Pinion Washer	Washer, Front Axle Differential Pinion Gear	5.542
Differential Pinion Shaft	Shaft, Front Axle Differential Pinion	5.517
Differential Pinion Shaft Roll Pin	Pin, Front Axle Differential Pinion	5.517

SPECIAL TOOLS

1
J 37759

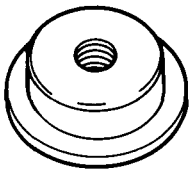

4
J 35138

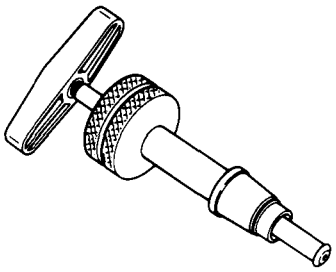

7
J 8001

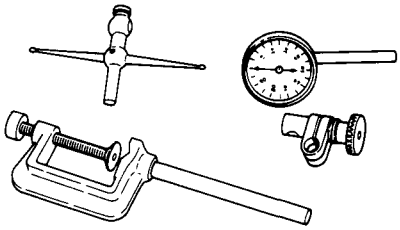

2
J 21777-102

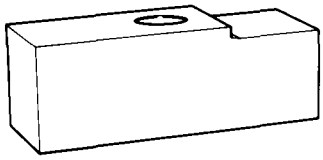

5
J 21777-101

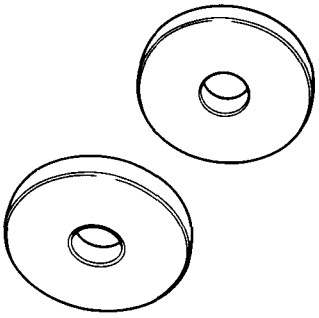

8
J 23597-1

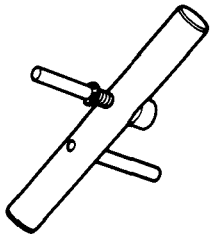

3
J 23597-12

6
J 21777-42

9
J 21777-43

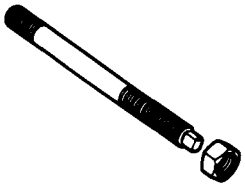

1 PINION INNER BEARING RACE INSTALLER
2 GAGE PLATE
3 PILOT WASHER
4 SIDE GEAR THRUST PLAY TOOL
5 SIDE BEARING DISCS
6 PILOT WASHER
7 DIAL INDICATOR SET
8 ARBOR
9 STUD ASSEMBLY

NC0488-4B-JT-RS

10
J 3289-21

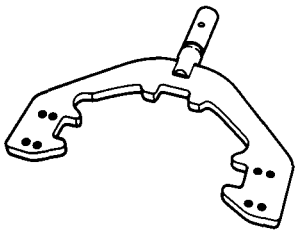

13
J 37769

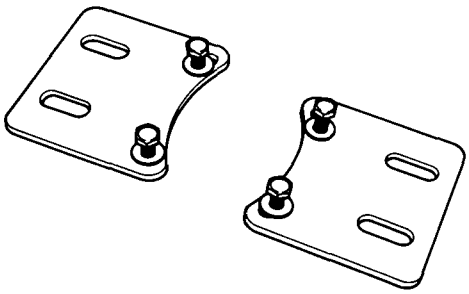

16
J 3289-20

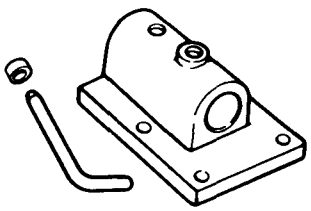

11
J 22888-D

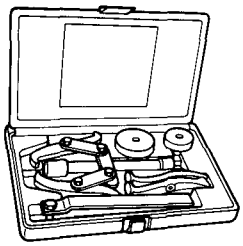

14
J 8107-4

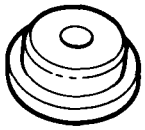

17
J 24433

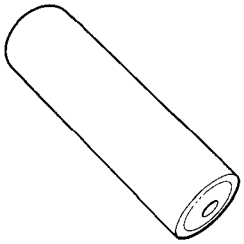

12
J 22912-01

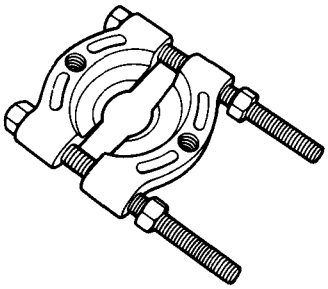

15
J 37758

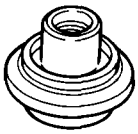

18
J 8092

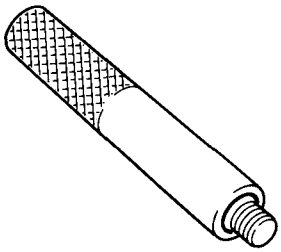

10 HOLDING FIXTURE
11 SIDE BEARING REMOVER
12 REAR BEARING REMOVER
13 DIFFERENTIAL HOLDING FIXTURE ADAPTERS
14 DIFFERENTIAL SIDE BEARING REMOVER PLUG
15 PINION OUTER RACE INSTALLER
16 HOLDING FIXTURE BASE
17 SIDE BEARING INSTALLER
18 DRIVER HANDLE

NC0452-4C-JT-RS

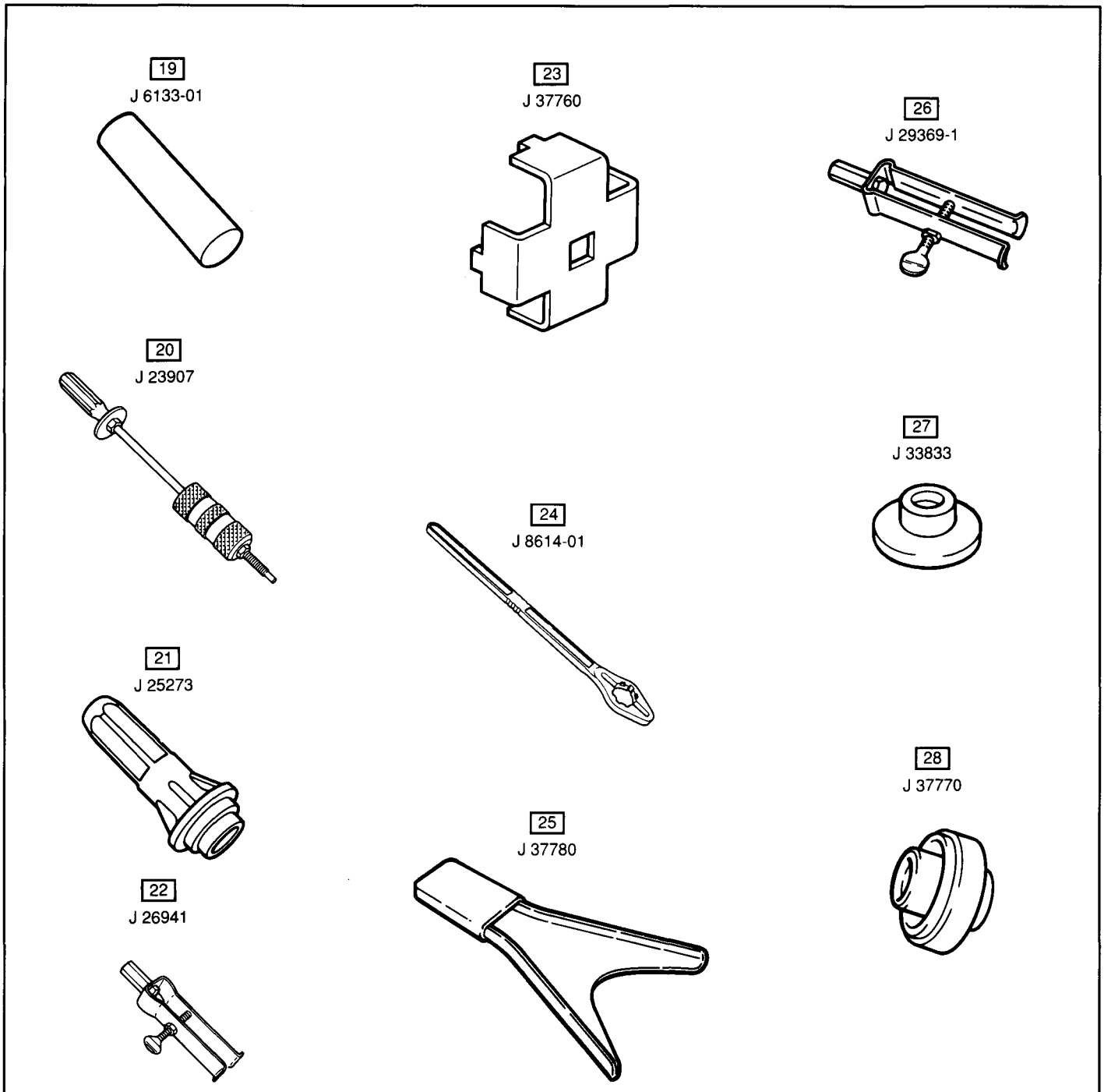

19 PINION BEARING INSTALLER
20 SLIDE HAMMER
21 PINION SEAL INSTALLER
22 KNUCKLE SEAL REMOVER
23 SPANNER WRENCH
24 FLANGE HOLDER
25 AXLE SHAFT REMOVER
26 AXLE BEARING REMOVER
27 AXLE BEARING INSTALLER
28 AXLE SHAFT OIL SEAL INSTALLER

NC4053-4C-JT-RS

SECTION 5

Brakes

CONTENTS

Brakes 5-1
Master Cylinder 5A-1
Front Disc Brakes 5B1-1
Leading/Trailing Drum Brakes 5C1-1
Vacuum Booster System 5D1-1
Rear Wheel Antilock (RWAL) Brake System 5E-1
Rear Wheel Antilock (RWAL) Brake System Diagnosis 5E3-1
Parking Brake 5F-1

SECTION 5

BRAKES

CAUTION: When servicing brake parts, do not create dust by grinding, sanding brake linings, or by cleaning brake parts with a dry brush or compressed air. Many brake parts contain asbestos fibers which can become airborne if dust is created during servicing. Breathing dust containing asbestos fibers may cause serious bodily harm. A water dampened cloth or water based solution should be used to remove any dust on brake parts. Equipment is commercially available to perform this washing function. These wet methods will prevent asbestos fibers from becoming airborne.

NOTICE: When fasteners are removed, always reinstall them at the same location from which they were removed. If a fastener needs to be replaced, use the correct part number fastener for that application. If the correct part number fastener is not available, a fastener of equal size and strength (or stronger) may be used. Fasteners that are not reused, and those requiring thread-locking compound, will be called out. The correct torque values must be used when installing fasteners that require them. If the above procedures are not followed, parts or system damage could result.

CONTENTS

General Description 5-1
Rear Wheel Antilock Brake (RWAL) System 5-1
Fluid and Fluid Handling 5-2
Substandard or Contaminated Brake Fluid . 5-2
Flushing the System 5-2
Proportioning/Differential Valve 5-2
Pressure Limiting Valve 5-2
"Brake" Indicator 5-2
Diagnosis 5-3
Brake System Testing 5-3
External Conditions That Affect Brake Performance 5-3
Brake System 5-3
Brake Pedal Travel 5-6
Brake Pedal Free Height Adjustment 5-6
Brake Fluid Leaks 5-6
Brake Hose and Pipe Inspection 5-7
Brake Fluid 5-7
Brake Fluid Pressure Differential Switch 5-7
On-Vehicle Service 5-7
Filling Master Cylinder 5-7
Brake Pedal 5-7
Stoplamp Switch 5-8
Stoplamp Switch Adjustment 5-8
Pipes, Hoses and Fittings 5-9
Brake Hose and Pipe Inspection 5-9
Brake Pipe Replacement 5-9
ISO Flares 5-11
Proportioning/Differential Valve 5-12
Pressure Limiting Valve 5-13
Bleeding Brake Hydraulic System 5-14
Manual Bleeding 5-14
Pressure Bleeding 5-16
Flushing Brake Hydraulic System 5-16
Specifications 5-17
Fastener Torques 5-17
Brake Specifications 5-17
Service Parts Information 5-17
Special Tools 5-18

GENERAL DESCRIPTION

When the foot brake pedal is depressed, hydraulic pressure is developed in the brake master cylinder to actuate the pistons (two in the front and four in the rear).

The brake master cylinder is a tandem master cylinder. Three brake pipes are connected to the brake master cylinder and they make two independent circuits. One connects front brakes (right and left), and the other connects rear brakes (right and left).

In this brake system, the disc brake type is used for the front wheel brake and a drum brake type (leading/trailing shoes) for the rear wheel brake.

The parking brake system is mechanical. It applies brake forces to the rear wheels only by means of the cable and mechanical linkage system. The same brake shoes are used for both parking and foot brakes.

REAR WHEEL ANTILOCK BRAKE (RWAL) SYSTEM

A rear wheel antilock brake (RWAL) system is standard equipment on this vehicle. The RWAL system is designed to reduce rear wheel lockup (and the resulting loss of driver control) during hard braking. The system functions using a pressure limiting valve to regulate the rear hydraulic brake pressure. The pressure limiting valve is located under the master cylinder and consists of two valves: a dump valve which releases pressure into an accumulator, and an isolation valve which maintains rear brake pressure. The valve is controlled by a microprocessor, the electronic brake control module (EBCM). The EBCM operates by receiving signals from the stoplamp switch and a speed sensor, located in the rear differential.

For more detailed information concerning the RWAL system, refer to SECTION 5E.

FLUID AND FLUID HANDLING

Substandard or Contaminated Brake Fluid

CAUTION: Brake fluid may irritate eyes and skin. In case of contact, take the following actions:

- **Eye contact — rinse thoroughly with water.**
- **Skin contact — wash with soap and water.**

NOTICE: Avoid spilling brake fluid on any of the vehicle's painted surfaces, wiring, cables or electrical connectors. Brake fluid will damage paint and electrical connections. If any fluid is spilled on the vehicle, flush the area with water to reduce possible damage.

Important

- Use only hydraulic brake fluid GM P/N 1052535, or equivalent DOT-3 fluid.
- Do not use power steering or transmission fluid in the brake system.
- Do not reuse brake fluid collected during system bleeding.
- Always store brake fluid in a closed container. Reseal brake fluid containers immediately after use. Do not use brake fluid left in an open or improperly sealed container because it absorbs moisture or can become contaminated.

Improper brake fluid, mineral oil (i.e., power steering fluid and transmission fluid) or water in the fluid may cause the brake fluid to boil or the rubber components in the hydraulic system to deteriorate.

If primary piston cups are swollen, then the rubber parts have deteriorated. This deterioration may be evidenced by swollen wheel cylinder piston cups on the drum brake wheels, or substandard or contaminated brake or master cylinder cover diaphragm.

If deterioration of rubber is evident, disassemble all hydraulic parts and wash with alcohol. Dry these parts with compressed air before assembly to keep alcohol out of the system. Replace all rubber parts in the system, including hoses. Also, when working on the brake mechanisms, check for fluid on the linings. If excessive fluid is found, replace the linings.

If master cylinder piston seals are satisfactory, check for leakage or excessive heat conditions. If condition is not found, drain fluid, flush with brake fluid, refill and bleed system.

The system must be flushed if there is any doubt as to the grade of the fluid in the system or if fluid has been used which contained parts that have been subjected to contaminated fluid.

Flushing the System

It is recommended that the entire hydraulic system be thoroughly flushed with clean brake fluid whenever new parts are installed in the hydraulic system. Approximately one quart of fluid is required to flush the hydraulic system.

The system must be flushed if there is any doubt as to the grade of the fluid in the system or if fluid has been used which contains the slightest trace of petroleum based fluids. All rubber parts that have been subjected to a contaminated fluid must be replaced.

PROPORTIONING/DIFFERENTIAL VALVE

The proportioning/differential valve is an integral part of the master cylinder. Outlet pressure is controlled to the rear brakes after a predetermined rear input pressure has been reached. This allows for smooth braking action and reduces the chances of rear wheel lockup during normal braking. The proportioning/differential valve has a bypass feature which insures full system pressure to the rear brakes in the event of a front brake system failure. In the case of rear brake system failure, full system pressure is delivered to the front brake system. For proportioning/differential valve service procedures, refer to "Proportioning/ Differential Valve" under "On-Vehicle Service" later in this section.

PRESSURE LIMITING VALVE

The pressure limiting valve is mounted under the brake master cylinder and is connected in the brake hydraulic circuit between the proportioning/differential valve and the rear brake circuit. The pressure limiting valve consists of an isolation valve, a dump valve, an accumulator and a reset switch. The pressure limiting valve either increases, decreases, or holds constant, brake fluid pressure to the rear brakes during braking action. The EBCM monitors rear wheel speed which dictates to the pressure limiting valve which internal valve(s) (either the dump valve, isolation valve or both) open or close. For a complete description of the pressure limiting valve, refer to SECTION 5E. For pressure limiting valve service procedures, refer to "Pressure Limiting Valve" under "On-Vehicle Service" later in this section.

"BRAKE" INDICATOR

The "BRAKE" indicator in the instrument panel cluster will illuminate to warn the driver of conditions in the brake system (base braking and RWAL braking) which may result in reduced braking capability. It will also illuminate when the parking brake is applied or not fully released. Conditions which turn on the "BRAKE" indicator include the following:

1. Parking brake not fully released. If the parking brake is applied or the lever is not fully released, the switch on the parking brake lever assembly will ground the "BRAKE" indicator circuit and cause it to illuminate.
2. Low brake fluid level. If the brake fluid level drops in the reservoir, the brake lever switch will ground the "BRAKE" indicator circuit and cause it to illuminate.
3. Instrument panel bulb check. When the ignition is turned to the "ON" position, the "BRAKE" indicator will illuminate for approximately two seconds and then shut off, providing that the parking brake lever is fully released and there are no brake system malfunctions.

Important

- Illumination of the "BRAKE" indicator may indicate reduced braking ability.
- If the "BRAKE" indicator lights, the brake fluid level is normal and the parking brake circuit is functioning properly, then a malfunction with the RWAL system exists; refer to SECTION 5E3.

DIAGNOSIS

BRAKE SYSTEM TESTING

Brakes should be tested on dry, clean and a reasonably smooth, level roadway. Road test the brakes by making brake applications with both light and heavy pedal pressure; however, avoid locking the brakes and sliding the tires. Locked brakes and sliding tires do not indicate any brake efficiency, for heavily braked but turning wheels will stop the vehicle in less distance than locked brakes.

EXTERNAL CONDITIONS THAT AFFECT BRAKE PERFORMANCE

The following should be considered when evaluating the brake performance:

Tires

Tires having unequal contact and grip on the road will cause unequal braking. The tires need to be equally inflated and tread pattern of the right and left tires must be approximately equal.

Vehicle Loading

When a vehicle has uneven loading, the heavily loaded wheels require more braking power than others. A vehicle which is heavily loaded requires more braking effort.

Wheel Alignment

Misalignment of the wheels can cause the brakes to pull to one side. Refer to SECTION 3A for more information.

BRAKE SYSTEM

Figures 1 and 2

For diagnosis of the brake system, refer to Figures 1 and 2. These charts cover many problems and causes associated with the hydraulic brake system, along with reference to the correct section(s) for further diagnosis.

SYMPTOM / CAUSES	BRAKE PEDAL TRAVEL	EXCESSIVE BRAKE PEDAL TRAVEL GRADUALLY INCREASES	EXCESSIVE BRAKE PEDAL EFFORT	BRAKES SLOW TO RESPOND	BRAKES SLOW TO RELEASE	UNEVEN BRAKING ACTION	UNEVEN BRAKING ACTION (SIDE TO SIDE)	BRAKES DRAG	SCRAPING NOISE FROM BRAKES (FRONT TO REAR)	BRAKES SQUEAK WITHOUT APPLICATION	BRAKES SQUEAK DURING STOP	BRAKES CHATTER (ROUGHNESS)	BRAKES GROAN AT END OF STOP	"BRAKE" INDICATOR IS ILLUMINATED	PREMATURE LINING WEAR-OUT	PARKING BRAKE WON'T HOLD	PARKING BRAKE WON'T RELEASE	BRAKE PULSATION	BRAKE PULLS	DIAGNOSTIC SECTION
Leaking Brake Pipe or Connection	X	XX							X						XX	X			X	X	5
Leaking Piston Seal	X	XX							X						X				X	X	5B1
Leaking Master Cylinder (Internal)	X	XX							X						X						5A
Air in Brake System	XX								X						XX						5
Contaminated or Improper Brake Fluid	X				X	X	X	X	X						X						5
Leaking Vacuum Booster			XX		X																5D1
Restricted Passage in Vacuum Booster		X	X		XX	X															5D1
Damaged Vacuum Booster		X	X	X	X	XX															5D1
Worn Out Brake Lining			X	X				X	X	X	X	X									5B1,5C1
Uneven Brake Lining Wear	X			X			X	X	X	X	X	XX			X					X	5B1,5C1
Glazed Brake Lining			XX		X			X	X		X	X									5B1,5C1
Incorrect Lining Material			X	X				X	X		X	X							X	X	5B1,5C1
Contaminated Brake Lining			X					XX	XX	X	X	X							X	X	5B1,5C1
Linings Damaged by Abusive Use			X	XX				X	X	X	X	X		X					X	X	5B1,5C1
Improper Rotor Surface Finish				X																X	5B1,5C1
Scored Rotor				X				X	X		X	X	XX						X		5B1
Improper Thickness Variation in Rotor				X									XX						XX		5B1
Excessive Lateral Run-out in Rotor				x									X						X		5B1
Brake Assembly Attachments Loose (Incl. Splash Shield)	X			X			X	X	X	X		X	X								5B1
Restricted Brake Fluid Passage		X	X		X	X	X	X	X												5
Improperly Adjusted Stoplamp Switch							X									X					5

XX-INDICATES MORE PROBABLE CAUSE(S) X-INDICATES OTHER CAUSE(S) PC9005-5-EJ-RS

Figure 1 Brake System Diagnosis Chart (1 of 2)

SYMPTOM / CAUSES	BRAKE PEDAL TRAVEL EXCESSIVE BRAKE PEDAL TRAVEL	EXCESSIVE BRAKE PEDAL TRAVEL GRADUALLY INCREASES	EXCESSIVE BRAKE PEDAL EFFORT	BRAKES SLOW TO RESPOND	BRAKES SLOW TO RELEASE	UNEVEN BRAKING ACTION	UNEVEN BRAKING ACTION (SIDE TO SIDE)	BRAKES DRAG	SCRAPING NOISE FROM BRAKES (FRONT TO REAR)	BRAKES SQUEAK WITHOUT APPLICATION	BRAKES SQUEAK DURING STOP	BRAKES CHATTER (ROUGHNESS)	BRAKES GROAN AT END OF STOP	"BRAKE" INDICATOR IS ILLUMINATED	PREMATURE LINING WEAR-OUT	PARKING BRAKE WON'T HOLD	PARKING BRAKE WON'T RELEASE	BRAKE PULSATION	BRAKE PULLS	DIAGNOSTIC SECTION
Brake Pedal Linkage Interference or Binding			X		X	XX	XX									X					5
Improperly Adjusted Parking Brake							X		X								X				5F
Incorrect Front Wheel Alignment								XX												X	3A
Incorrect Tire Pressure								X												X	0B
Loose Front Suspension Parts							X	X		XX			X							X	3C
Out-of-balance Wheel Assemblies													XX			X			X		3E
Operator Riding Brake Pedal			X				X									X					–
Sticking Caliper or Caliper Pistons					X	X	XX	X	X												5B1
Parking Brake Switch Ckt. Grounded															XX						8A
Parking Brake Not Releasing						X		X							XX						5F
Low Brake Fluid															X						5
Caliper to Knuckle Clearance						X		X								X				X	5B1
Improper Rear Brake Adjustment	XX	X							X												5F
Low Engine Vacuum			X		X																6
RWAL DTC Stored															XX						5E
Excessive Vehicle Loading	X		X						XX												–
Improper Torqued Wheel Nuts													X						X		3E
Poor Drum Surface Finish													X						X		5C1
Parking Brake Cables Frozen																		X			5F
Parking Brake Cables Corroded																		X			5F

XX-INDICATES MORE PROBABLE CAUSE(S) X-INDICATES OTHER CAUSE(S) PC9300-5-EJ-RS

Figure 2 Brake System Diagnosis Chart (2 of 2)

BRAKE PEDAL TRAVEL

Figure 3

With the ignition switch in the "OFF" position, pump brake pedal until all reserve is exhausted from the brake booster.

Depress brake pedal with a force of 294 N (66 lbs.) and measure the distance between the brake pedal and the bulkhead. The distance should not be less than 130 mm (5.12-inches) (Figure 3). If the clearance is less than 130 mm (5.12-inches) the rear brake shoes or front disc brake pads may be worn out beyond specifications or there may be air in the brake pipes. Refer to SECTION 5B1 for front disc brake pad service procedures. Refer to SECTION 5C1 for rear brake shoe service procedures. If it is suspected that there is air in the brake system, refer to "Bleeding Brake Hydraulic System" later in this section for brake system bleeding procedures.

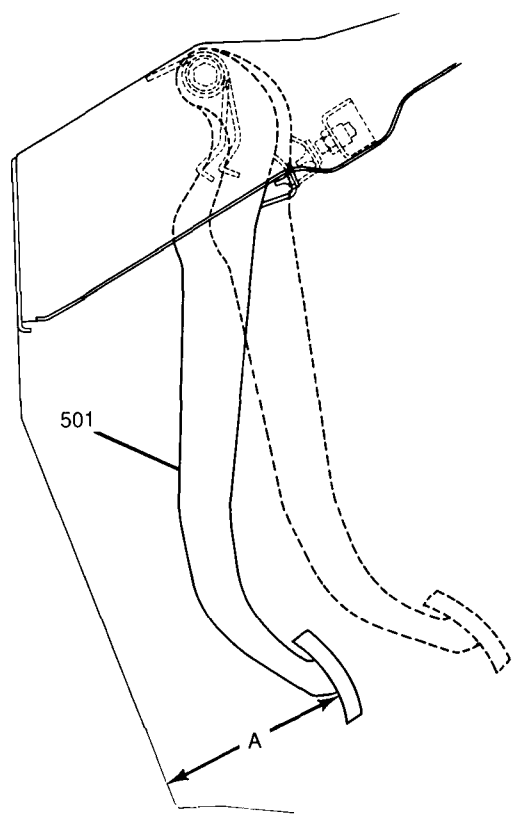

A MEASURE BRAKE PEDAL TO BULKHEAD CLEARANCE

501 BRAKE PEDAL

PC0642-5-EJ-RS

Figure 3 Measuring Brake Pedal Travel

BRAKE PEDAL FREE HEIGHT ADJUSTMENT

Figure 4

The distance between the brake booster bracket gasket and the center of the master cylinder operating rod clevis hole must be less than 125.5 mm (4.94-inches) (Figure 4). Refer to SECTION 5D1 for brake booster push rod adjustment procedures.

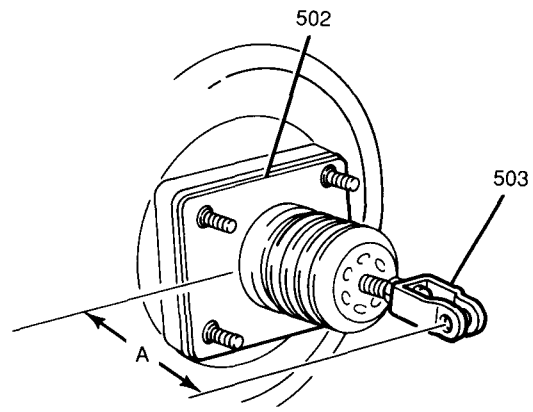

A 125.5 mm (4.94")

502 BRAKE BOOSTER BRACKET GASKET

503 MASTER CYLINDER OPERATING ROD CLEVIS

PC5175-5-EJ-RS

Figure 4 Brake Pedal Free Height

BRAKE FLUID LEAKS

With the engine running at idle and the transmission in neutral, depress the brake pedal and keep constant foot pressure on the pedal. Should the pedal gradually fall away with constant pressure, the hydraulic system may be leaking.

Check the master cylinder fluid level. While a slight drop in reservoir level does result from normal lining wear, an abnormally low level indicates a leak in the system.

Inspect

- For a cracked master cylinder casting or for brake fluid around the master cylinder. Leaks are indicated only if there is at least one drop of fluid. A damp condition is not abnormal.

The hydraulic system could be leaking internally and externally.

Check the entire brake system for leakage. If even a slight leak is evident, the cause should be corrected or defective parts replaced.

Should the fluid level be normal, check the brake booster push rod length; refer to SECTION 5D1. If push rod length is out of specification, adjust or replace the push rod. Check the brake pedal travel and the parking brake adjustment. Refer to SECTION 5F for parking brake adjustment procedures.

Brake Hose and Pipe Inspection

All brake pipes, hoses and connections should be inspected at least twice a year. A light and mirror may be needed for an adequate inspection.

Inspect

1. Hydraulic brake pipes and hoses for the following:
   - Road hazard damage.
   - Brake hoses for cracks and chafing of the outer cover.
   - Leaks and blisters.
   - Proper routing and mounting.
   - Brake pipes for damage, cracks, dents and corrosion.

If any of these conditions are discovered, replacement of either the brake pipes or hoses will be necessary.

2. For leaks at brake pipe and brake hose connections. If leakage is found, verify the torque of fasteners and/or replace the pipe or hose.
3. Caliper and wheel cylinder boots for leakage. If leakage is found, rebuild or replace the assembly. Refer to SECTION 5B1 for caliper service procedures and SECTION 5C1 for wheel cylinder service procedures.

BRAKE FLUID

Brake fluid must be clean and free of impurities at all times. The brake system will require flushing if any brake fluid impurities are found. Refer to "Substandard or Contaminated Brake Fluid" earlier in this section to determine the condition of the brake fluid. Refer to "Flushing the Hydraulic System" later in this section for brake system flushing procedures.

BRAKE FLUID PRESSURE DIFFERENTIAL SWITCH

Refer to SECTION 5E3 or 8A for diagnosis of the brake fluid pressure differential switch.

Refer to SECTION 5E3 for diagnosis of the brake fluid pressure limiting valve.

ON-VEHICLE SERVICE

FILLING MASTER CYLINDER

Figure 5

The master cylinder fluid reservoir must be kept properly filled to insure adequate reserve and to prevent air from entering the hydraulic system (Figure 5). However, because of expansion due to heat absorbed from brakes and from engine, the master cylinder fluid reservoir must not be overfilled.

For master cylinder fluid reservoir filling procedures, refer to SECTION 5A.

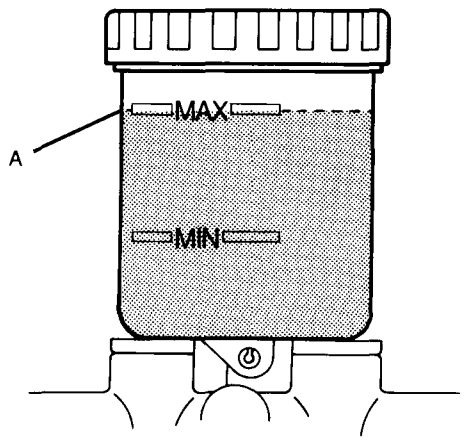

A MASTER CYLINDER FLUID RESERVOIR LEVEL SHOULD BE BETWEEN MINIMUM AND MAXIMUM LINES

PC5176-5-EJ-RS

Figure 5 Master Cylinder Fluid Reservoir Level

BRAKE PEDAL

Figures 6 and 7

Remove or Disconnect

1. Cotter pin and clevis pin from master cylinder operating rod clevis (Figure 6).

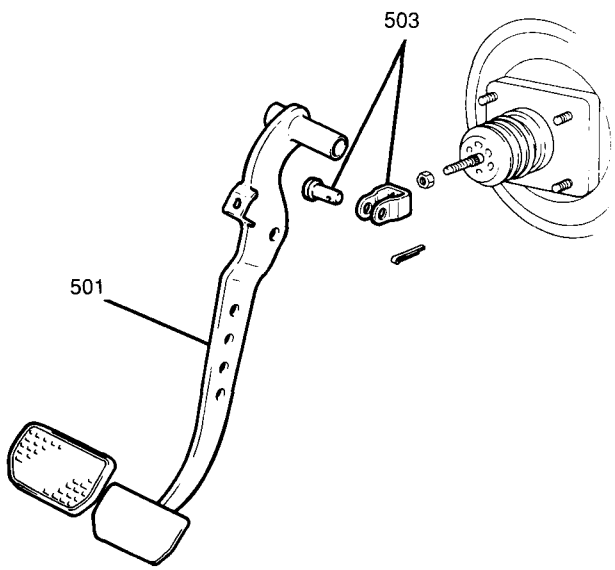

501 BRAKE PEDAL

503 MASTER CYLINDER OPERATING ROD CLEVIS

PC2540-5-EJ-RS

Figure 6 Brake Pedal-to-Master Cylinder Operating Rod Clevis

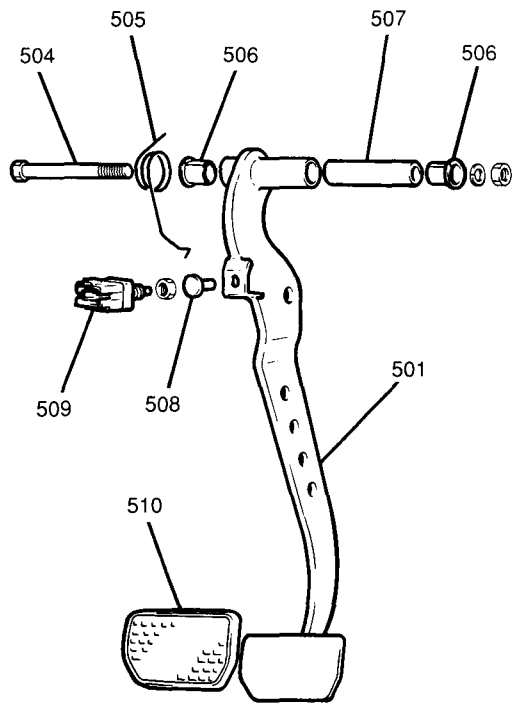

501 BRAKE PEDAL
504 BRAKE PEDAL PIVOT SHAFT BOLT
505 BRAKE PEDAL RETURN SPRING
506 BRAKE PEDAL BUSHING
507 BRAKE PEDAL SPACER
508 BRAKE PEDAL RETURN CUSHION
509 STOPLAMP SWITCH
510 BRAKE PEDAL PAD

PC2545-5-EJ-RS

Figure 7 Brake Pedal Assembly

2. One nut from brake pedal pivot shaft bolt (Figure 7).
- Slide brake pedal pivot shaft bolt out and remove brake pedal from vehicle.

Important

- Note location of brake pedal return spring before removal.

3. Brake pedal return spring from brake pedal (Figure 7).
4. Two brake pedal bushings from brake pedal (if required, Figure 7).
5. Brake pedal spacer from brake pedal (if required, Figure 7).
6. Brake pedal pad from brake pedal (if required, Figure 7).

Install or Connect

1. Brake pedal pad to brake pedal (if removed).
- Lubricate brake pedal spacer, bushings and pivot shaft bolt with chassis lubricant GM P/N 1052497, or equivalent.
2. Brake pedal spacer to brake pedal (if removed).
3. Two brake pedal bushings to brake pedal (if removed).
4. Brake pedal return spring to brake pedal.
5. Brake pedal to vehicle.
- Slide brake pedal pivot shaft bolt through brake pedal pivot shaft; secure with one nut. Do not tighten fully.
6. Brake pedal to brake booster yoke clevis; secure with clevis pin and cotter pin (Figure 6).

Tighten

- Brake pedal pivot shaft bolt nut to 30 N·m (22 lb.ft.).

STOPLAMP SWITCH

Figure 7

Remove or Disconnect

1. Negative (-) battery cable.
2. Stoplamp switch electrical connector.
3. One locknut and stoplamp switch from vehicle (Figure 7).

Install or Connect

1. Stoplamp switch to vehicle; secure with one locknut.

Tighten

- Stoplamp switch locknut to 10 N·m (89 lb.in.).

2. Stoplamp switch electrical connector.
3. Negative (-) battery cable.

Tighten

- Negative (-) battery cable-to-negative (-) battery terminal retainer to 15 N·m (11 lb.ft.).

STOPLAMP SWITCH ADJUSTMENT

Figure 8

1. Insert stoplamp switch threads into mounting bracket and turn switch clockwise; secure with locknut (Figure 8). Do not tighten fully.
2. Pull brake pedal toward stoplamp switch.

Adjust

- Clearance between end of stoplamp switch threads and brake pedal return cushion by turning stoplamp switch either clockwise or counterclockwise until clearance is within 0.5 to 1.0 mm (0.02 to 0.04-inch) (Figure 8). Tighten locknut to torque specifications.

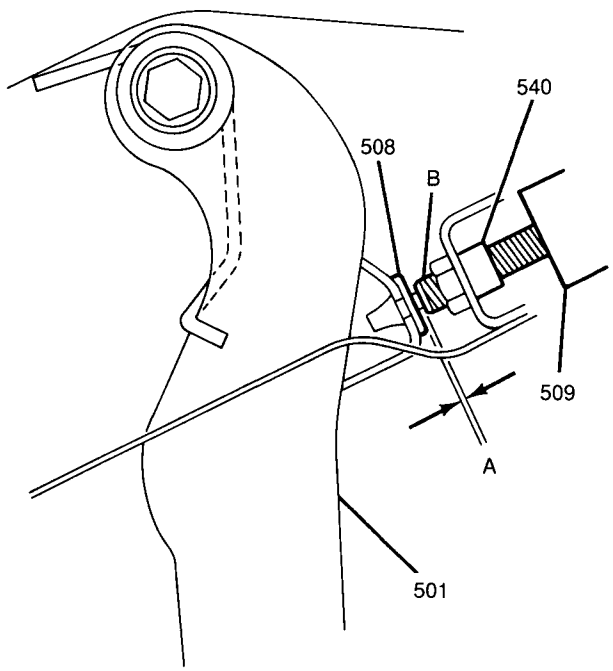

A CLEARANCE BETWEEN END OF THREAD OF STOPLAMP SWITCH ASSEMBLY AND BRAKE PEDAL RETURN CUSHION IS WITHIN 0.5–1.0 mm (0.02-0.04")

B STOPLAMP SWITCH THREADS

501 BRAKE PEDAL

508 BRAKE PEDAL RETURN CUSHION

509 STOPLAMP SWITCH

540 STOPLAMP SWITCH MOUNTING BRACKET

PC0641-5-EJ-RS

Figure 8 Stoplamp Switch Adjustment

PIPES, HOSES AND FITTINGS

Brake Hose and Pipe Inspection

Hoses

The flexible hydraulic brake hoses, which transmit hydraulic pressure from the steel brake pipes on the body to the rear brakes and front calipers, should be inspected at least twice a year.

Inspect

- Hydraulic brake hoses for the following:
  - Road hazard damage.
  - Cracks and chafing of the outer cover.
  - Leaks and blisters.
  - Proper routing and mounting.
- A light and mirror may be needed for an adequate inspection.
- If any of these conditions are noticed, adjust or replace the brake hose assembly.

Pipes

CAUTION: Never use copper tubing because copper is subject to fatigue cracking and corrosion which could result in brake failure. Always use double walled steel tubing when replacing brake pipes. The use of any other pipe is not recommended and may cause brake system failure. Carefully route and retain replacement brake pipes. Always use the correct fasteners and the original location for replacement brake pipes. Failure to properly route and retain brake pipes may cause damage to the brake pipes and cause brake system failure.

Brake pipes should be inspected twice a year.

Inspect

- Brake pipes for damage, cracks, dents and corrosion.
- A light and mirror may be needed for an adequate inspection.
- If any of these conditions are noticed, replacement of the brake pipe will be necessary.

Brake Pipe Replacement

Figures 9 through 12

CAUTION: Never use copper tubing because copper is subject to fatigue cracking and corrosion which could result in brake failure. Always use double walled steel tubing when replacing brake pipes. The use of any other pipe is not recommended and may cause brake system failure. Carefully route and retain replacement brake pipes. Always use the correct fasteners and the original location for replacement brake pipes. Failure to properly route and retain brake pipes may cause damage to the brake pipes and cause brake system failure.

Refer to Figures 9 through 12 for brake pipe/hose routing and fitting locations.

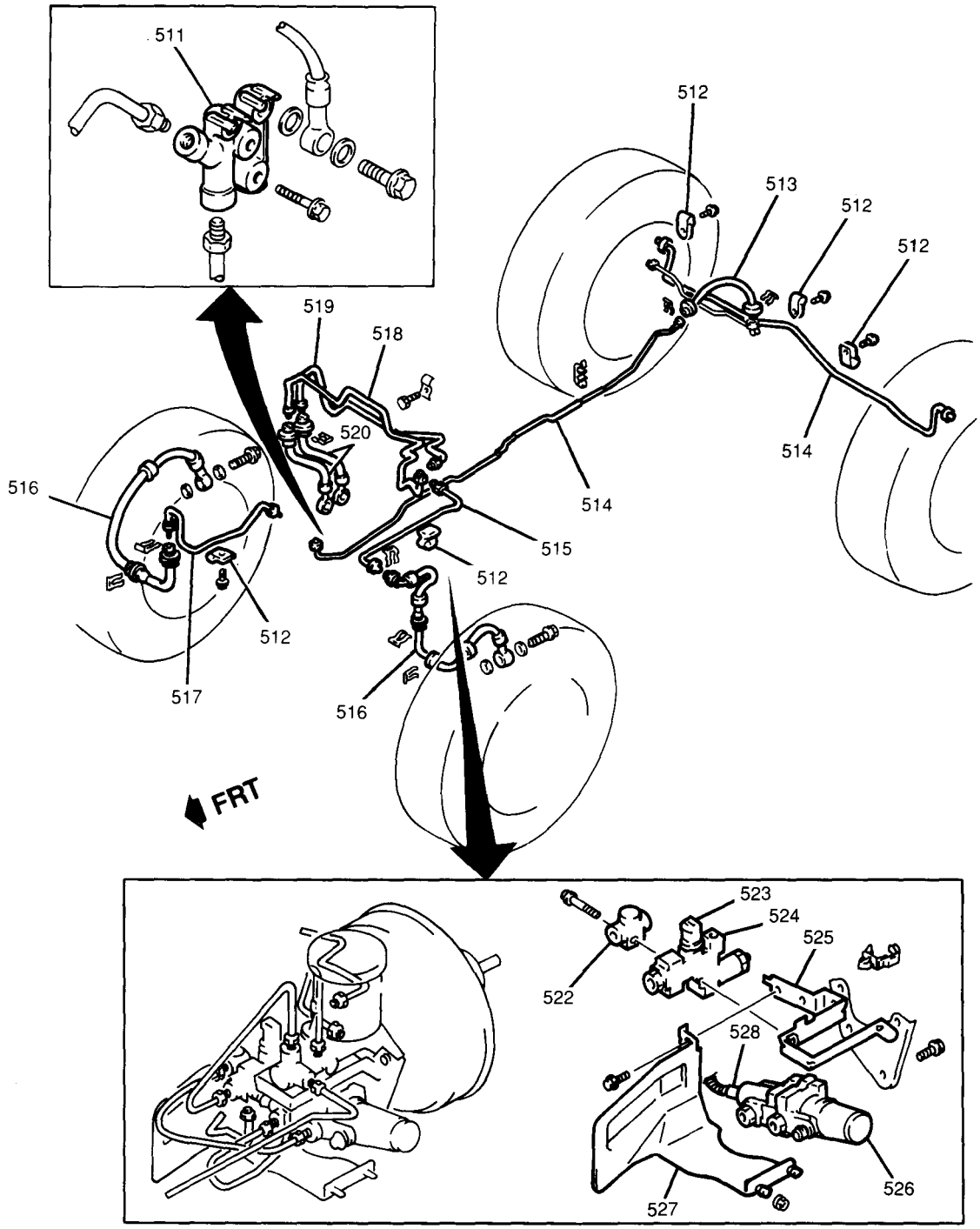

511 FRONT BRAKE PIPE UPPER CONNECTOR
512 CLAMP
513 REAR BRAKE HOSE
514 REAR BRAKE PIPE
515 MASTER CYLINDER FRONT BRAKE PIPE
516 FRONT BRAKE HOSE
517 FRONT BRAKE PIPE
518 PROPORTIONING/DIFFERENTIAL VALVE BRAKE PIPE
519 FIVE-WAY BRAKE JOINT-TO-RH BRAKE JOINT PIPE
520 PROPORTIONING/DIFFERENTIAL VALVE HOSES
522 TWO-WAY JOINT
523 BRAKE FLUID PRESSURE DIFFERENTIAL SWITCH
524 PROPORTIONING/DIFFERENTIAL VALVE
525 RETAINING BRACKET
526 PRESSURE LIMITING VALVE
527 HEAT PROTECTOR SHIELD
528 PRESSURE LIMITING VALVE ELECTRICAL CONNECTOR

PC6100-5-EJ-RS

Figure 9 Brake Pipes/Hoses Routing

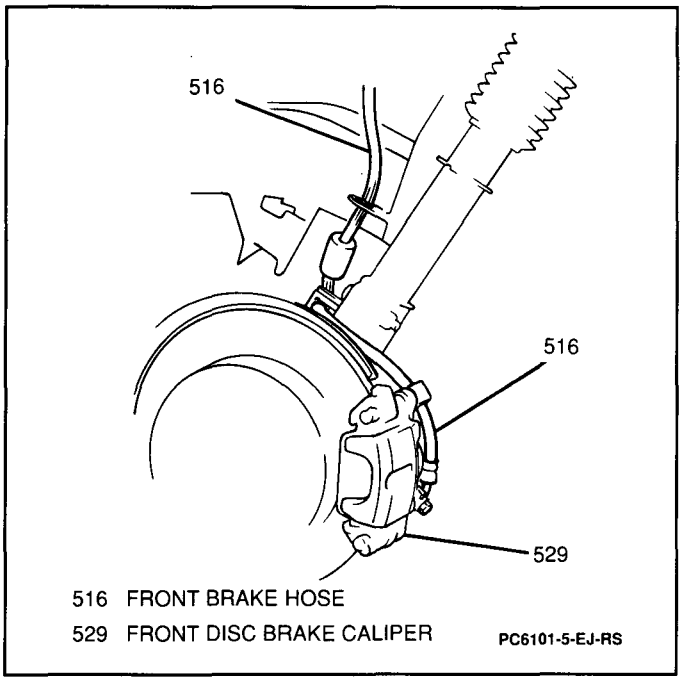

Figure 10 Front Brake Hose

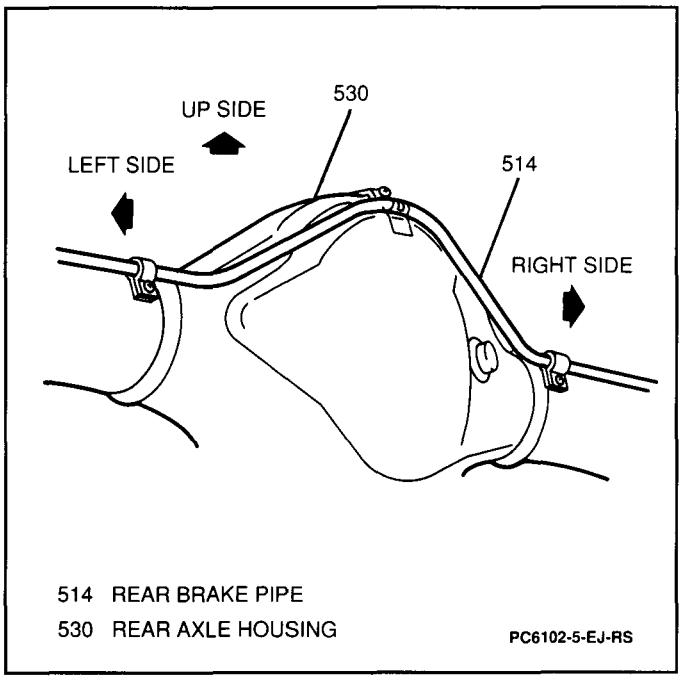

Figure 11 Rear Brake Pipe Routing

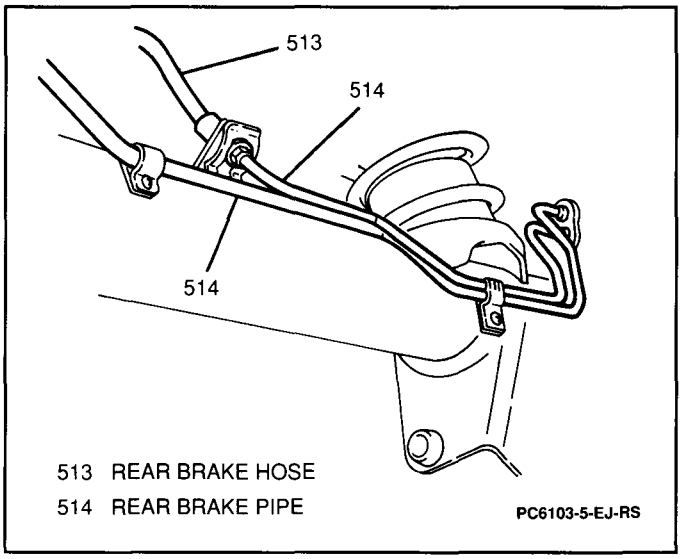

Figure 12 Rear Brake Pipes

ISO Flares

Figure 13

Tools Required:
J 29803-A ISO Flaring Kit
J 25310 Universal Tube Bender

1. Obtain the recommended brake pipe and the correct size steel fitting nuts. Outside diameter of pipe is used to specify size.
2. Cut brake pipe to length. Correct length may be determined by measuring old pipe using a string and adding 3 mm (0.12-inch) for each ISO flare.
3. Make sure fittings are installed on brake pipe before starting flare.
4. Flare brake pipe ends using a J 29803-A (Figure 13). Follow instructions included with tool.

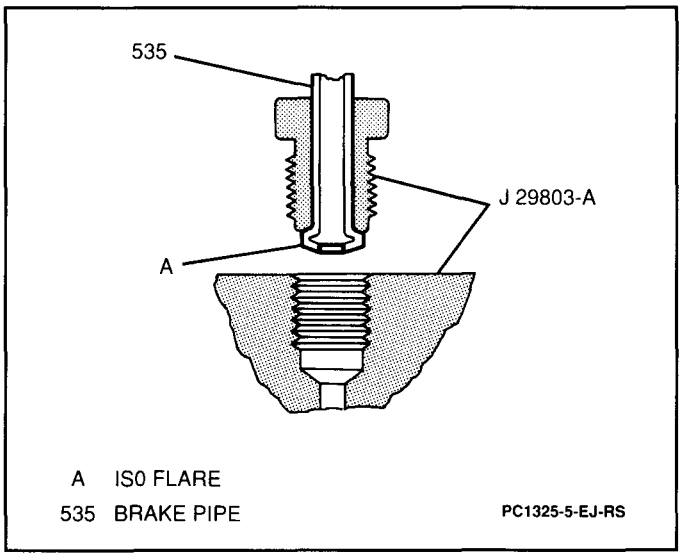

Figure 13 ISO Flare (Sectional View)

5. Bend brake pipe assembly to match old pipe using a J 25310. All bends must be smooth with no sudden bends which could restrict flow of brake fluid.

   NOTICE: When replacing brake pipes, ensure that they are not positioned between electric wires to prevent chafing and therefore failure of the brake and/or electrical system. A clearance of 19 mm (0.75-inch) must be maintained between brake pipes and all moving or vibrating parts.

Proportioning/Differential Valve

Figure 14

Remove or Disconnect

1. Negative (-) battery cable.
2. Two nuts, one bolt and heat protector shield from vehicle (Figure 14).
3. Pressure differential switch electrical connector (Figure 14).
   - Place a drain pan beneath the proportioning/differential valve to catch escaping brake fluid.
4. Four brake pipes from proportioning/differential valve.
5. One bolt securing both the two-way joint and the proportioning/differential valve to the retaining bracket (Figure 14).
   - Set the two-way joint aside and remove the proportioning/differential valve from the vehicle.

Install or Connect

1. Two-way joint and the proportioning/differential valve to the retaining bracket; secure with one bolt.

   Tighten
   - Proportioning/differential valve bolt to 25 N·m (19 lb.ft.).
2. Four brake pipes to proportioning/differential valve.

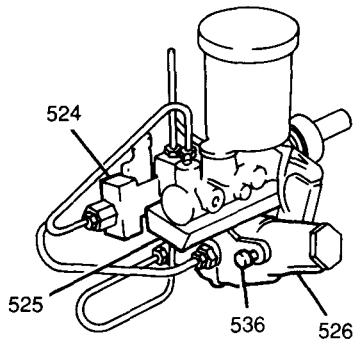

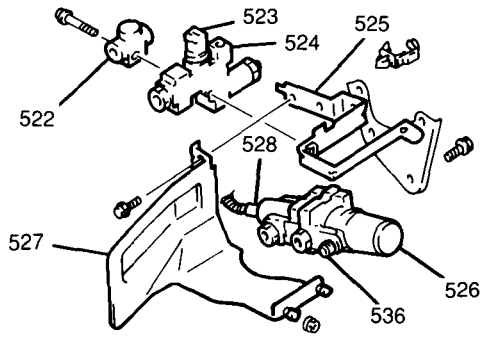

522 TWO-WAY JOINT
523 BRAKE FLUID PRESSURE DIFFERENTIAL SWITCH
524 PROPORTIONING/DIFFERENTIAL VALVE
525 RETAINING BRACKET
526 PRESSURE LIMITING VALVE
527 HEAT PROTECTOR SHIELD
528 PRESSURE LIMITING VALVE ELECTRICAL CONNECTOR
536 BLEEDER VALVE

PC1457-5-EJ-RS

Figure 14 Master Cylinder Assembly

Tighten

- Brake pipe flare nuts to 16 N·m (12 lb.ft.).

3. Pressure differential switch electrical connector.
4. Heat protector shield to vehicle; secure with two nuts and one bolt.

Tighten

- Heat protector shield nuts and bolts to 20 N·m (15 lb.ft.).

5. Negative (-) battery cable.

Tighten

- Negative (-) battery cable-to-negative (-) battery terminal retainer to 15 N·m (11 lb.ft.).

- Bleed brake system. Refer to "Bleeding Brake Hydraulic System" later in this section.

Pressure Limiting Valve

Figure 14

Remove or Disconnect

1. Negative (-) battery cable.
2. Two nuts, one bolt and heat protector from vehicle (Figure 14).
- Loosen air cleaner (ACL) outlet hose clamp screw and remove hose from air intake case.
3. Two bolts and loosen ACL.
- Loosen ACL inlet hose clamp screw and remove hose from ACL.
4. ACL from vehicle.
5. Brake fluid pressure differential switch electrical connector (Figure 14).
6. Forward brake pipe from two-way joint (Figure 14).
7. Four brake pipes from proportioning/differential valve (Figure 14).
8. One bolt securing both the two-way joint and the proportioning/differential valve to the retaining bracket.
- Set the two-way joint aside and remove the proportioning/differential valve from the vehicle.
9. Pressure limiting valve electrical connector (Figure 14).
10. Two nuts and pressure limiting valve and retaining bracket from the master cylinder (Figure 14).
11. Two brake pipes from the pressure limiting valve.
12. Two nuts and pressure limiting valve from the retaining bracket.

Install or Connect

1. Pressure limiting valve to retaining bracket; secure with two nuts.

Tighten

- Pressure limiting valve-to-retaining bracket nuts to 10 N·m (89 lb.in.).

2. Two brake pipes to the pressure limiting valve.

Tighten

- Brake pipe flare nuts to 16 N·m (12 lb.ft.).

3. Pressure limiting valve with retaining bracket-to-master cylinder; secure with two nuts.

Tighten

- Retaining bracket-to-master cylinder nuts to 27 N·m (20 lb.ft.).

4. Pressure limiting valve electrical connector.
5. Two-way joint and the proportioning/differential valve to the retaining bracket; secure with one bolt.

Tighten

- Proportioning/differential valve bolt to 25 N·m (19 lb.ft.).

6. Four brake pipes to the proportioning/differential valve.

Tighten

- Brake pipe flare nuts to 16 N·m (12 lb.ft.).

7. Forward brake pipe to two-way joint.

Tighten

- Brake pipe flare nuts to 16 N·m (12 lb.ft.).

8. Brake fluid pressure differential switch electrical connector.
9. ACL inlet hose to ACL; secure with one screw.
10. Two bolts to ACL.

Tighten

- ACL bolts to 20 N·m (15 lb.ft.).

11. ACL outlet hose to air intake case; secure with one screw.
12. Heat protector shield to vehicle; secure with two nuts and one bolt.

Tighten

- Heat protector shield nuts and bolt to 20 N·m (15 lb.ft.).

13. Negative (-) battery cable.

Tighten

- Negative (-) battery cable-to-negative (-) battery terminal retainer to 15 N·m (11 lb.ft.).

- Bleed brake system. Refer to "Bleeding Brake Hydraulic System" later in this section.

BLEEDING BRAKE HYDRAULIC SYSTEM

A bleeding operation is necessary to remove air whenever it is introduced into the hydraulic brake system.

It may be necessary to bleed the hydraulic system at all four wheels if air has been introduced through a low fluid level or by disconnecting brake pipes at the master cylinder. If a brake pipe is disconnected at one wheel, only that cylinder/caliper needs to be bled. If pipes are disconnected at any fitting located between the master cylinder and the brakes, then the brake system served by the disconnected pipe must be bled.

The time required to bleed the hydraulic system can be reduced if the master cylinder reservoir is filled with brake fluid and as much air as possible is expelled before the master cylinder is installed on the vehicle.

Manual Bleeding

Manual bleeding procedures require two technicians. With vacuum assisted brakes, remove the booster reserve by applying the brakes several times without the engine running until all reserve is depleted. Fill the master cylinder reservoir with brake fluid and keep at least one-half full during bleeding operations.

Master Cylinder

Figure 15

Important

- When installing a new master cylinder, the new master cylinder must be bench bled prior to installation onto the vehicle; refer to SECTION 5A.

1. Fill the master cylinder with brake fluid.

Important

- The master cylinder has three brake pipe outlet ports which must be bled to insure proper master cylinder operation (Figure 15). Bleed one port at a time until all air is removed before continuing with the next port.

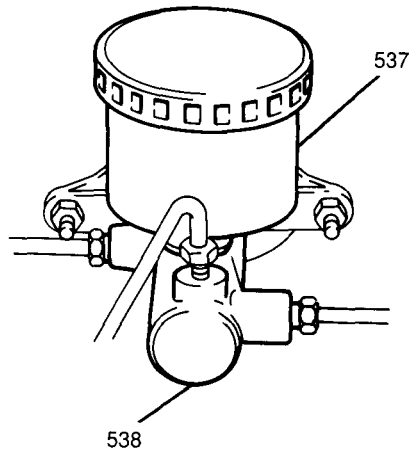

537 MASTER CYLINDER FLUID RESERVOIR
538 MASTER CYLINDER PC2529-5-EJ-RS

Figure 15 Master Cylinder Brake Pipes

2. Have a second technician depress the brake pedal slowly one time and hold.

   NOTICE: Brake fluid is extremely damaging to paint. If fluid should touch painted surface, immediately wipe fluid from paint and clean painted surface.

3. Loosen the brake pipe flare nut at the port to purge air from the master cylinder bore. Tighten the flare nut and then **release the brake pedal slowly. Wait 15 seconds.** Repeat this sequence, including the 15 second wait, until all air is removed from the bore.

   Tighten

   - Brake pipe flare nuts to 16 N·m (12 lb.ft.).

4. Repeat this operation with the second and then the third brake pipe outlet port.
5. Check for a firm brake pedal action. If brake pedal appears to be spongy, it will be necessary to bleed each wheel caliper and wheel cylinder. Refer to "Wheel Cylinders/Calipers" later in this section.

Proportioning/Differential Valve

Figure 14

1. Fill the master cylinder with brake fluid.
2. Have a second technician depress the brake pedal slowly one time and hold.

   NOTICE: Brake fluid is extremely damaging to paint. If fluid should touch painted surface, immediately wipe fluid from paint and clean painted surface.

3. Loosen the bleeder valve on the pressure limiting valve to purge air from the pressure limiting valve (Figure 14). Tighten the bleeder valve and then **release the brake pedal slowly. Wait 15 seconds.** Repeat this sequence, including the 15 second wait, until all air is removed from the pressure limiting valve.

   Tighten

   - Pressure limiting valve bleeder valve to 16 N·m (12 lb.ft.).

4. Check for a firm brake pedal action. If brake pedal appears to be spongy, it will be necessary to bleed each brake caliper and wheel cylinder. Refer to "Wheel Cylinders/Calipers" later in this section.

Pressure Limiting Valve

Figure 14

1. Fill the master cylinder with brake fluid.
2. Have a second technician depress the brake pedal slowly and hold.

   NOTICE: Brake fluid is extremely damaging to paint. If fluid should touch painted surface, immediately wipe fluid from paint and clean painted surface.

3. Loosen the bleed valve on the pressure limiting valve to purge air from the pressure limiting valve (Figure 14). Tighten the bleed valve and then **release the brake pedal slowly. Wait 15 seconds.** Repeat this sequence, including the 15 second wait, until all air is removed from the pressure limiting valve.

   Tighten

   - Pressure limiting valve bleeder valve to 16 N·m (12 lb.ft.).

4. Check for a firm brake pedal action. If brake pedal appears to be spongy, it will be necessary to bleed each brake caliper and wheel cylinder. Refer to "Wheel Cylinders/Calipers" later in this section.

Wheel Cylinders/Calipers

Figure 16

When bleeding either the wheel cylinder or the calipers, two technicians are required. Individual wheel cylinders or calipers are bled one at a time starting with the one furthest from the master cylinder.

Important

- There is no bleeder valve for the right rear brake. The rear brakes can only be bled through the bleeder valve located on the left rear brake.

1. Bleed wheel cylinders/calipers in the following sequence:
   A. Left rear.
   B. Right front.
   C. Left front.
2. Place a box end wrench over the bleeder valve. Attach a transparent hose over the valve and allow hose to hang submerged in brake fluid in a transparent container (Figure 16).

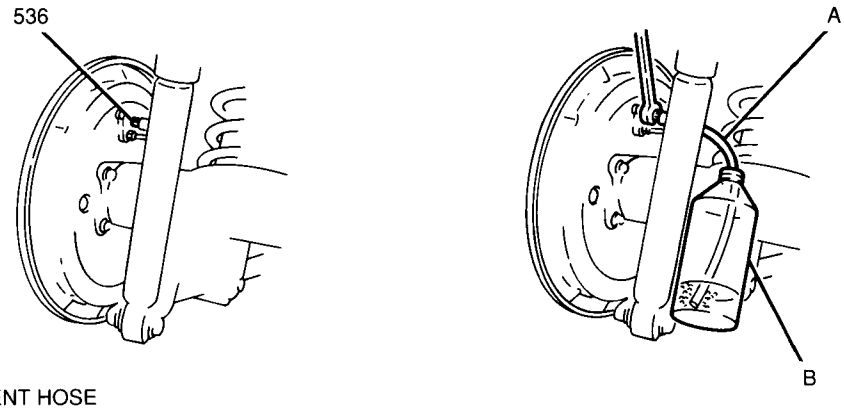

A TRANSPARENT HOSE
B TRANSPARENT CONTAINER
536 BLEEDER VALVE

PC1766-5-EJ-RS

Figure 16 Bleeding Brakes — Typical

3. Have a second technician depress the brake pedal slowly one time and hold. Loosen the bleeder valve to purge the air from the wheel cylinder/caliper. Tighten bleeder valve and have second technician slowly release pedal. Wait 15 seconds. Repeat the sequence, including the 15 second wait, until all air is removed (air bubbles are not emitted from transparent hose).

CAUTION: Do not move the vehicle until a firm brake pedal is obtained. Air in the brake system can cause loss of brakes, which may result in personal injury.

Important

- It may be necessary to repeat the sequence 10 or more times to remove all the air. Rapid pumping of the brake pedal pushes the master cylinder secondary piston down the bore in a manner that makes it difficult to bleed the system.

Tighten

- Wheel cylinder/caliper bleeder valve to 16 N·m (12 lb.ft.).

4. Check for a firm brake pedal action. If brake pedal appears to be spongy, it will be necessary to repeat entire wheel cylinder/caliper bleeding operation.

Pressure Bleeding

Tools Required:
J 29532 Diaphragm Type Brake Bleeder
J 37762 Pressure Brake Bleeder Adapter

NOTICE: Pressure bleeding equipment must be the diaphragm type and must have a rubber diaphragm between the air supply and the brake fluid to prevent air, moisture, oil and other contaminants from entering the hydraulic system.

1. Install a J 37762 to the master cylinder.
2. Charge a J 29532 to 140 to 172 kPa (20-25 psi).
3. Connect the J 29532 line to the J 37762 and open line valve.
4. Raise and suitably support vehicle. Refer to SECTION 0A.

Important

- There is no bleeder valve for the right rear brake. The rear brakes can only be bled through the bleeder valve located on the left rear brake.

5. Bleed brakes in the following sequence.
   A. Left rear.
   B. Right front.
   C. Left front.
6. Attach a transparent hose to the bleeder valve and submerge opposite end in a clean container partially filled with brake fluid.
7. Place a proper size box end wrench over bleeder valve. Open valve at least 1/2 to 3/4 turn and allow fluid to flow until no air is seen in the fluid. Do not allow J 29532 to run out of fluid. If fluid should run out, air will enter system and entire bleeding procedure must be repeated.
8. Close the bleeder valve, making sure it seals.
9. Repeat Steps 6, 7 and 8 until all calipers and wheel cylinders have been bled.

Tighten

- Wheel cylinder/caliper bleeder valve to 16 N·m (12 lb.ft.).

10. Lower vehicle.
11. Check for a firm brake pedal action. If brake pedal appears spongy, it will be necessary to repeat entire procedure.

CAUTION: Do not move the vehicle until a firm brake pedal is obtained. Air in the brake system can cause loss of brakes, which may result in personal injury.

12. Remove the J 29532 and the J 37762 from master cylinder.

FLUSHING BRAKE HYDRAULIC SYSTEM

It is recommended that the entire hydraulic system be thoroughly flushed with clean brake fluid whenever new parts are installed in hydraulic system. Approximately one quart of fluid is required to flush the hydraulic system.

The system must be flushed if there is any doubt as to the grade of fluid in the system or if the fluid which has been used contains the slightest trace of mineral oil. All rubber parts that have been subjected to a contaminated fluid must be replaced.

SPECIFICATIONS

FASTENER TORQUES

Air Cleaner (ACL) Bolts	20 N·m (15 lb.ft.)
Brake Pipe Flare Nuts	16 N·m (12 lb.ft.)
Brake Pedal Pivot Shaft Bolt Nut	30 N·m (22 lb.ft.)
Heat Protector Shield Nuts and Bolt	20 N·m (15 lb.ft.)
Negative (-) Battery Cable-to-Negative (-) Battery Terminal Retainer	15 N·m (11 lb.ft.)
Pressure Limiting Valve-to-Retaining Bracket Nuts	10 N·m (89 lb.in.)
Pressure Limiting Valve Bleeder Valve	16 N·m (12 lb.ft.)
Proportioning/Differential Valve Bolt	25 N·m (19 lb.ft.)
Retaining Bracket-to-Master Cylinder Nut	27 N·m (20 lb.ft.)
Stoplamp Switch Nut	10 N·m (89 lb.in.)
Wheel Cylinder/Caliper Bleeder Valve	16 N·m (12 lb.ft.)

BRAKE SPECIFICATIONS

Brake Pedal Travel	130 mm (5.12 in.) with 294 N (66 lbs.) of Force
Stoplamp Switch-to-Brake Pedal Clearance	0.5-1.0 mm (0.02-0.04 in.)

SERVICE PARTS INFORMATION

Component Name Used in Section 5	Reference Name in Service Parts Catalog	Group Number
Brake Pedal	Pedal, Brake	4.625
Five-Way Brake Joint-to-RH Brake Joint Pipe	Pipe, 5 Way Brk Joint to RH Brk Joint	4.685
Front Brake Hose	Hose, Frt Brake	4.680
Front Brake Pipe	Pipe, Brk Propn Vlv	4.685
Master Cylinder Front Brake Pipe	Pipe, Brk M/Cyl Frt	4.685
Proportioning/Differential Valve	Valve, Brk Propn.	4.652
Proportioning/Differential Valve Hoses	Hose, Brk Press Mod Vlv	4.680
Pressure Limiting Valve	Valve, Diff Pressure Limiting	4.370
Rear Brake Hose	Hose, Rr Brake	4.680
Rear Brake Pipe	Pipe, Rr Brake	4.685
Stoplamp Switch	Switch, S/Lp	2.447

SPECIAL TOOLS

1
J 29532

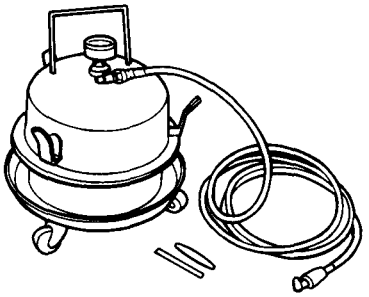

3
J 29803-A

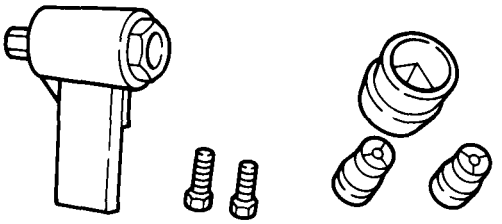

2
J 25310

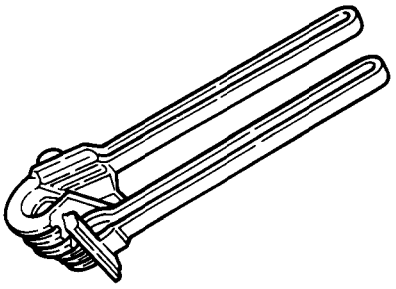

4
J 37762

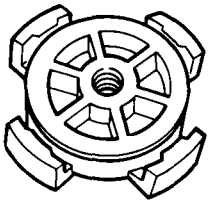

1 DIAPHRAGM TYPE BRAKE BLEEDER
2 UNIVERSAL TUBE BENDER
3 ISO FLARING KIT
4 PRESSURE BRAKE BLEEDER ADAPTER

PC2900-5-EJ-RS

SECTION 5A

MASTER CYLINDER

NOTICE: When fasteners are removed, always reinstall them at the same location from which they were removed. If a fastener needs to be replaced, use the correct part number fastener for that application. If the correct part number fastener is not available, a fastener of equal size and strength (or stronger) may be used. Fasteners that are not reused, and those requiring thread-locking compound, will be called out. The correct torque values must be used when installing fasteners that require them. If the above procedures are not followed, parts or system damage could result.

CONTENTS

General Description 5A-1
Master Cylinder 5A-1
Brake Fluid Level Switch 5A-2
Brake Fluid Pressure Differential Switch ... 5A-2
Fluid and Fluid Handling 5A-2
Substandard or Contaminated Brake Fluid 5A-2
Diagnosis 5A-2
Master Cylinder 5A-2
On-Vehicle Service 5A-2
Filling Master Cylinder Fluid Reservoir 5A-2
Brake Fluid Level Switch 5A-3
Master Cylinder Fluid Reservoir 5A-3
Master Cylinder 5A-4
Master Cylinder Bench Bleeding 5A-6
Bleeding Brake System 5A-6
Unit Repair 5A-7
Master Cylinder 5A-7
Specifications 5A-8
Fastener Torques 5A-8
Service Parts Information 5A-8

GENERAL DESCRIPTION

MASTER CYLINDER

Figure 1

The master cylinder contains two pistons and three piston cups (Figure 1). Hydraulic pressure is produced when the pistons compress brake fluid within the primary and secondary chambers. The hydraulic pressure in the primary chamber acts on the rear brakes - both right and left. The pressure produced in the secondary chamber acts on the right and left front brakes.

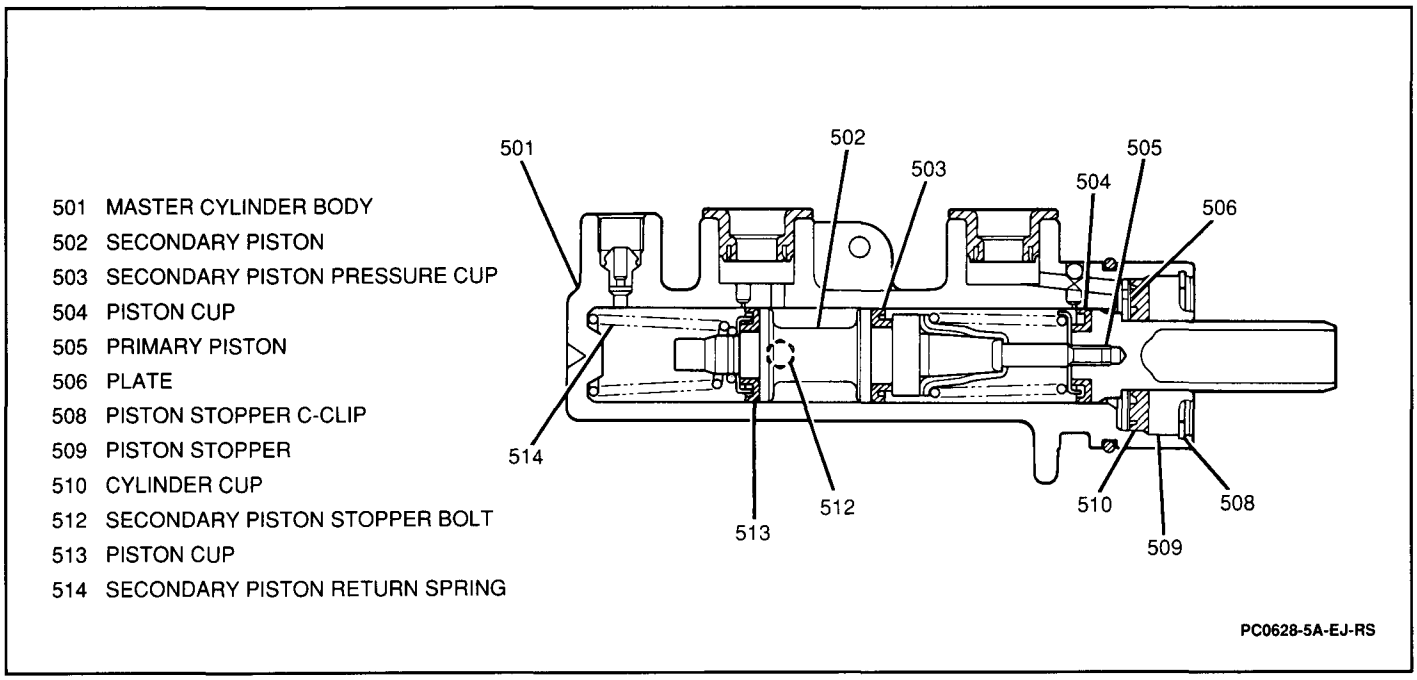

Figure 1 Master Cylinder Assembly

The pressure limiting valve and the proportioning/ differential valve are part of the rear wheel antilock brake (RWAL) system which are attached to the master cylinder. For complete information concerning the RWAL system, refer to SECTION 5E.

NOTICE: Replace all components included in the repair kits used to service this master cylinder. Lubricate rubber parts with clean fresh brake fluid to ease assembly. Do not use lubricated shop air on brake parts since damage to rubber components may result. If any hydraulic component is removed or a brake line is disconnected, bleed the brake system. The torque values specified are for dry, unlubricated fasteners.

Brake Fluid Level Switch

The brake fluid level switch senses low brake fluid level in the master cylinder reservoir. If a low fluid level is sensed, the "BRAKE" indicator lights.

Brake Fluid Pressure Differential Switch

The brake fluid pressure differential switch senses unequal pressure in the brake pipes and hoses. If an unequal pressure is sensed, the "BRAKE" indicator lights.

FLUID AND FLUID HANDLING

Substandard or Contaminated Brake Fluid

CAUTION: Brake fluid may irritate eyes and skin. In case of contact, take the following actions:

- **Eye contact – rinse thoroughly with water.**
- **Skin contact – wash with soap and water.**

NOTICE: Avoid spilling brake fluid on any of the vehicle's painted surfaces, wiring, cables or electrical connectors. Brake fluid will damage paint and electrical connections. If any fluid is spilled on the vehicle, flush the area with water to reduce possible damage.

Important

- Use only hydraulic brake fluid GM P/N 1052535, or equivalent DOT-3 fluid.
- Do not use power steering or transmission fluid in the brake system.
- Do not reuse brake fluid collected during system bleeding.
- Always store brake fluid in a closed container. Reseal brake fluid containers immediately after use. Do not use brake fluid left in an open or improperly sealed container because it can absorb moisture or become contaminated.

Improper brake fluid, mineral oil (i.e., power steering fluid and transmission fluid) or water in the fluid may cause the brake fluid to boil or the rubber components in the hydraulic system to deteriorate.

If primary piston cups are swollen, then the rubber parts have deteriorated. This deterioration may be evidenced by swollen wheel cylinder piston cups on the drum brake wheels, substandard, or contaminated brake or master cylinder cover diaphragm.

If deterioration of rubber is evident, disassemble all hydraulic parts and wash with alcohol. Dry these parts with compressed air before assembly to keep alcohol out of the system. Replace all rubber parts in the system, including hoses. Also, when working on the brake mechanisms, check for fluid on the linings. If excessive fluid is found, replace the linings.

If master cylinder piston seals are satisfactory, check for leakage or excessive heat conditions. If condition is not found, drain fluid, flush with brake fluid, refill and bleed system.

The system must be flushed if there is any doubt as to the grade of the fluid in the system or if fluid has been exposed to parts that have been subjected to contaminated fluid.

DIAGNOSIS

MASTER CYLINDER

Refer to the "Brake System Diagnosis Chart" in SECTION 5 for diagnosis of the brake system including the master cylinder. The chart covers many problems and causes associated with the hydraulic brake system, along with reference to correct section(s) for further diagnosis.

ON-VEHICLE SERVICE

FILLING MASTER CYLINDER FLUID RESERVOIR

Figure 2

The master cylinder fluid reservoir must be kept properly filled to ensure adequate reserve and to prevent air from entering the hydraulic system. However, because of fluid expansion due to heat absorbed from the brakes and engine, the fluid reservoir must not be overfilled.

The master cylinder fluid reservoir is attached to the top of the master cylinder which is located under the hood on the left-side of the bulkhead.

Thoroughly clean fluid reservoir cap before removal to avoid getting dirt into reservoir.

Important

- Use only hydraulic brake fluid GM P/N 1052535, or equivalent DOT-3 fluid.
- Do not use power steering or transmission fluid in the brake system.
- Do not reuse brake fluid collected during system bleeding.
- Do not use brake fluid left in an open or improperly sealed container because it can absorb moisture or become contaminated.

Improper brake fluid, mineral oil (i.e., power steering fluid and transmission fluid) or water in the fluid may cause the brake fluid to boil or the rubber components in the hydraulic system to deteriorate.

Add brake fluid as required to bring fluid level to the "MAX" line located on the front side of the fluid reservoir (Figure 2).

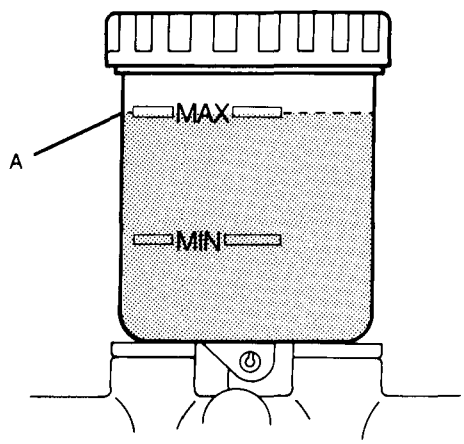

A MASTER CYLINDER FLUID RESERVOIR LEVEL SHOULD BE BETWEEN MINIMUM AND MAXIMUM LINES

PC5176-5-EJ-RS

Figure 2 Master Cylinder Fluid Reservoir Fluid Level

Brake Fluid Level Switch

The brake fluid level switch is not serviced separately. The brake fluid level switch is serviced as part of the master cylinder fluid reservoir. For master cylinder fluid reservoir service procedures, refer to "Master Cylinder Fluid Reservoir" later in this section.

MASTER CYLINDER FLUID RESERVOIR

Figures 3, 4 and 5

Remove or Disconnect

1. Negative (-) battery cable.
- Loosen air cleaner (ACL) outlet hose clamp screw and remove hose from air intake case.
2. Two bolts and loosen ACL.
- Loosen ACL inlet hose clamp screw and remove hose from ACL.
3. ACL from vehicle.
4. Brake fluid level switch electrical connector.

NOTICE: Brake fluid is extremely damaging to paint. If fluid should touch painted surface, immediately wipe fluid from paint and clean painted surface.

5. Master cylinder fluid reservoir cap and syphon brake fluid from reservoir (Figure 3).

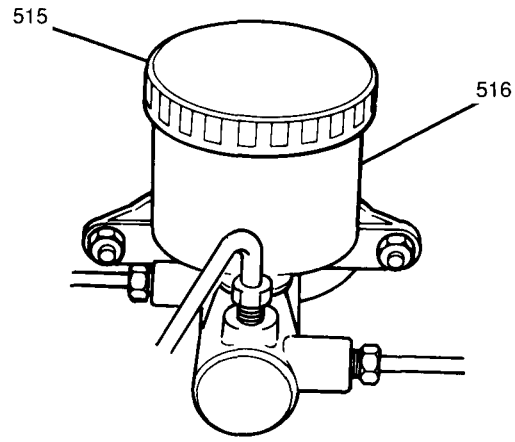

515 MASTER CYLINDER FLUID RESERVOIR CAP
516 MASTER CYLINDER FLUID RESERVOIR

PC2800-5A-EJ-RS

Figure 3 Master Cylinder Fluid Reservoir

- Clean outside of reservoir.
6. Master cylinder fluid reservoir roll pin using a hammer and a punch (Figure 4).

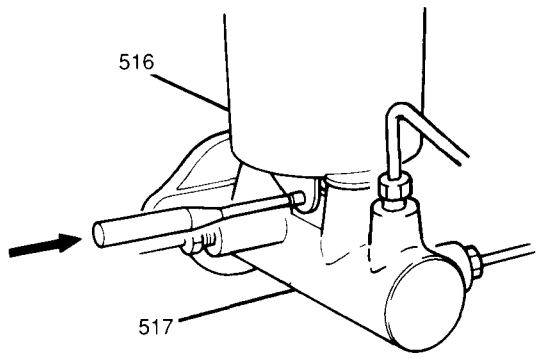

516 MASTER CYLINDER FLUID RESERVOIR
517 MASTER CYLINDER

PC0925-5A-EJ-RS

Figure 4 Driving Out Master Cylinder Fluid Reservoir Roll Pin

7. Master cylinder fluid reservoir and connector grommets from master cylinder.

Install or Connect

1. New master cylinder fluid reservoir connector grommets into master cylinder. Lubricate grommets with new, clean brake fluid. Make sure grommets are seated properly (Figure 5).

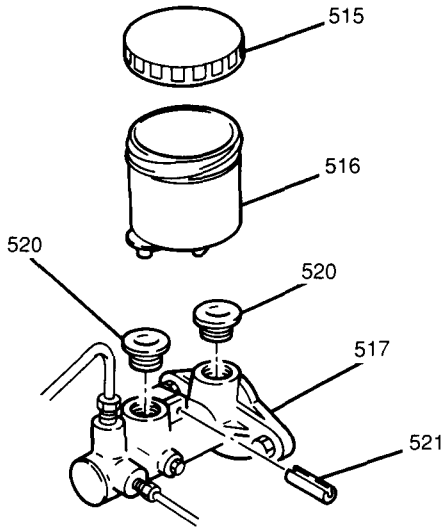

515 MASTER CYLINDER FLUID RESERVOIR CAP
516 MASTER CYLINDER FLUID RESERVOIR
517 MASTER CYLINDER
520 MASTER CYLINDER FLUID RESERVOIR CONNECTOR GROMMETS
521 ROLL PIN

PC0926-5A-EJ-RS

Figure 5 Master Cylinder Fluid Reservoir Connector Grommets

2. Master cylinder fluid reservoir to master cylinder.
3. Master cylinder fluid reservoir roll pin using a hammer and a punch.
4. Brake fluid level switch electrical connector.
- Refill reservoir with brake fluid GM P/N 1052535, or equivalent.
- Check for fluid leakage.
5. ACL inlet hose to ACL; secure with one screw.
6. Two bolts to ACL.

Tighten

- ACL bolts to 20 N·m (15 lb.ft.).

7. ACL outlet hose to air intake case; secure with one screw.
8. Negative (-) battery cable.

Tighten

- Negative (-) battery cable-to-negative (-) battery terminal retainer to 15 N·m (11 lb.ft.).

- Bleed brake system. Refer to SECTION 5.

MASTER CYLINDER

Figures 3, 6, 7 and 8

Remove or Disconnect

1. Negative (-) battery cable.

   NOTICE: Brake fluid is extremely damaging to paint. If fluid should touch painted surface, immediately wipe fluid from paint and clean painted surface.

2. Master cylinder fluid reservoir cap and syphon brake fluid from reservoir (Figure 3).
3. One bolt, two nuts and heat protector shield from vehicle (Figure 6).

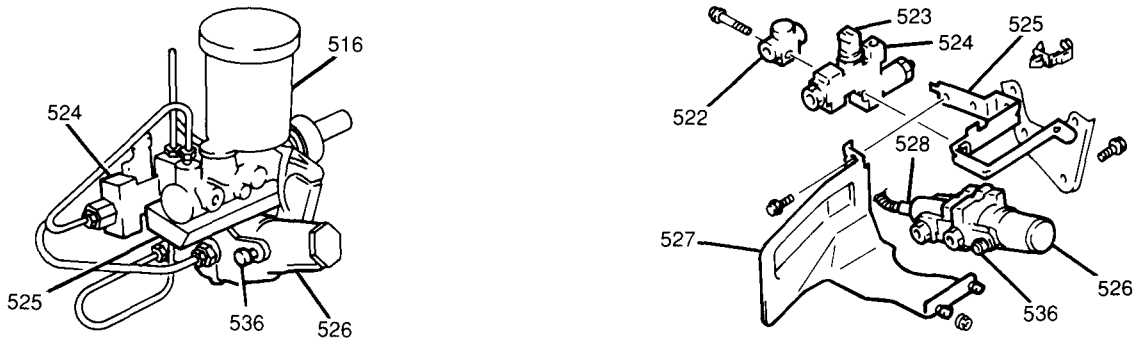

516 MASTER CYLINDER FLUID RESERVOIR
522 TWO-WAY JOINT
523 BRAKE FLUID PRESSURE DIFFERENTIAL SWITCH
524 PROPORTIONING/DIFFERENTIAL VALVE
525 RETAINING BRACKET
526 PRESSURE LIMITING VALVE
527 HEAT PROTECTOR SHIELD
528 BRAKE FLUID PRESSURE LIMITING VALVE ELECTRICAL CONNECTOR
536 BLEEDER VALVE

PC4500-5A-EJ-RS

Figure 6 Master Cylinder Assembly

- Loosen air cleaner (ACL) outlet hose clamp screw and remove hose from air intake case.

4. Two bolts and loosen ACL.

- Loosen ACL inlet hose clamp screw and remove hose from ACL.

5. ACL from vehicle.
6. Brake fluid pressure differential switch electrical connector.
7. Four brake pipe flare nuts and pipes from proportioning/differential valve (Figure 7).

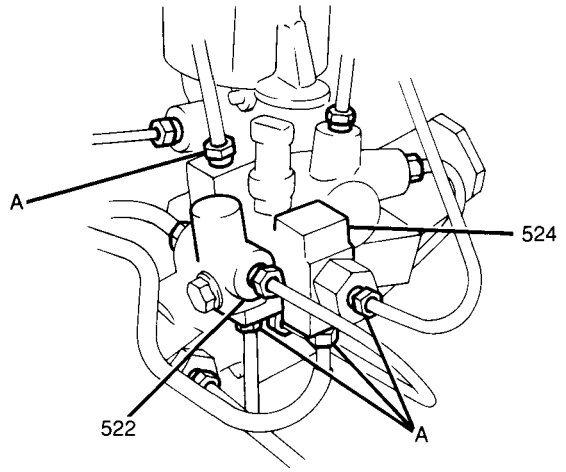

A PROPORTIONING/DIFFERENTIAL VALVE BRAKE PIPE FLARE NUTS
522 TWO-WAY JOINT
524 PROPORTIONING/DIFFERENTIAL VALVE

PC0566-5A-EJ-RS

Figure 7 Proportioning/Differential Valve Brake Pipe Flare Nuts

8. One bolt securing both the two-way joint and the proportioning/differential valve to the retaining bracket (Figure 6).

- Set the two-way joint aside and remove the proportioning/differential valve from the vehicle.

9. Brake fluid pressure limiting valve electrical connector (Figure 6).
10. Two nuts, pressure limiting valve and retaining bracket from vehicle (Figure 6).
11. Left front brake pipe flare nut and brake pipe from master cylinder (Figure 8).

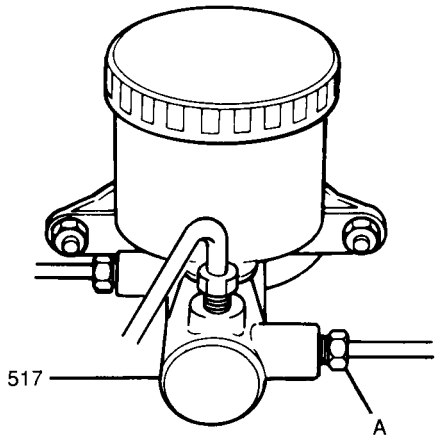

A LIFT FRONT BRAKE PIPE FLARE NUT
517 MASTER CYLINDER

PC0528-5A-EJ-RS

Figure 8 Master Cylinder Brake Pipes

12. Brake fluid level switch electrical connector.
13. Master cylinder from vehicle.
14. Two brake pipe flare nuts and pipes from master cylinder.

Install or Connect

1. Two brake pipes to master cylinder; secure with flare nuts, finger tighten.
2. Master cylinder to vehicle.

Tighten

- Brake pipe flare nuts to 16 N·m (12 lb.ft.).

3. Brake fluid level switch electrical connector.
4. Left front brake pipe to master cylinder; secure with flare nut.

Tighten

- Brake pipe flare nut to 16 N·m (12 lb.ft.).

5. Pressure limiting valve with retaining bracket to master cylinder; secure with two nuts.

Tighten

- Retaining bracket-to-master cylinder nuts to 27 N·m (20 lb.ft.).

6. Brake fluid pressure limiting valve electrical connector.
7. The two-way joint and the proportioning/differential valve to the retaining bracket; secure with one bolt.

Tighten

- Proportioning/differential valve bolt to 25 N·m (19 lb.ft.).

8. Four brake pipes to the proportioning/differential valve; secure with four flare nuts.

Tighten

- Brake pipe flare nuts to 16 N·m (12 lb.ft.).

9. Brake fluid pressure differential switch electrical connector.

- Refill brake fluid reservoir with brake fluid GM P/N 1052535, or equivalent.
- Check for fluid leakage.

10. ACL inlet hose to ACL; secure with one screw.
11. Two bolts to ACL.

Tighten

- ACL bolts to 20 N·m (15 lb.ft.).

12. ACL outlet hose to air intake case; secure with one screw.
13. Heat protector shield to vehicle; secure with two nuts and one bolt.

Tighten

- Heat protector shield nuts and bolt to 20 N·m (15 lb.ft.).

14. Negative (-) battery cable.

Tighten

- Negative (-) battery cable-to-negative (-) battery terminal retainer to 15 N·m (11 lb.ft.).

- Bleed brake system. Refer to SECTION 5.

MASTER CYLINDER BENCH BLEEDING

CAUTION: Brake fluid may irritate eyes and skin. In case of contact, take the following actions:

- **Eye contact – rinse thoroughly with water.**
- **Skin contact – wash with soap and water.**

NOTICE: Brake fluid is extremely damaging to paint. If fluid should touch painted surface, immediately wipe fluid from paint and clean painted surface.

NOTICE: Use only hydraulic brake fluid, GM P/N 1052535, or equivalent DOT-3 brake fluid from a clean, sealed container. Do not use any fluid from a container which is wet with water. Do not use DOT-5 silicone brake fluid.

Fill master cylinder fluid reservoir with brake fluid and keep full throughout entire bleeding procedure. Install adapters into each master cylinder outlet port. Attach a piece of plastic tubing to each adapter and submerge other end in the master cylinder reservoir. Make sure the tubes remain submerged in brake fluid. Using a wooden or plastic dowel, slowly push in the master cylinder piston and release. Repeat until there is no sign of air (bubbles) in the brake fluid.

BLEEDING BRAKE SYSTEM

Refer to SECTION 5 for manual and pressure bleeding procedures.

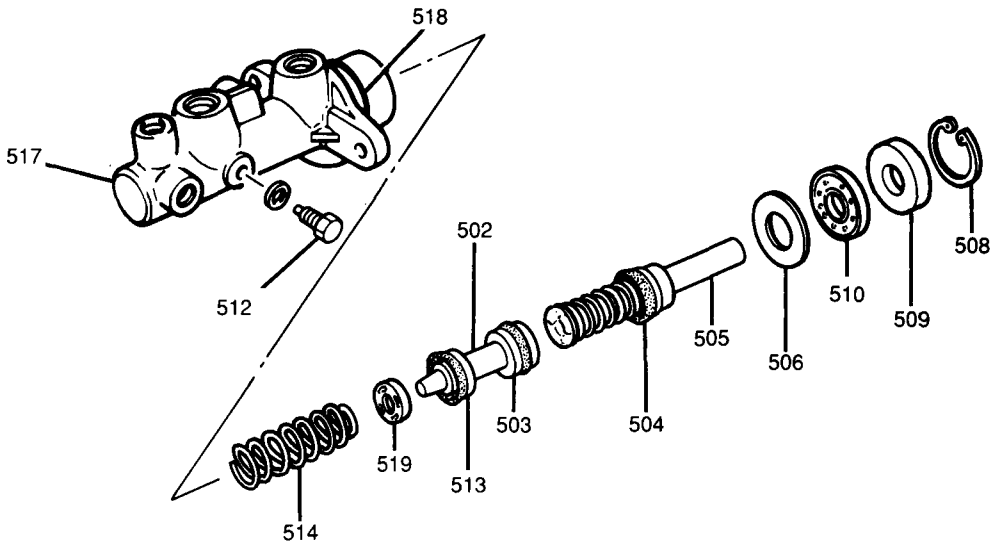

502 SECONDARY PISTON
503 SECONDARY PISTON PRESSURE CUP
504 PISTON CUP
505 PRIMARY PISTON
506 PLATE
508 PISTON STOPPER C-CLIP
509 PISTON STOPPER
510 CYLINDER CUP
512 SECONDARY PISTON STOPPER BOLT
513 PISTON CUP
514 SECONDARY PISTON RETURN SPRING
517 MASTER CYLINDER
518 MASTER CYLINDER SEAL
519 RETURN SPRING SECONDARY SEAT

PC0933-5A-EJ-RS

Figure 9 Master Cylinder Components

UNIT REPAIR

MASTER CYLINDER

Figures 9 through 12

Remove or Disconnect

1. Piston stopper C-clip (Figure 10).

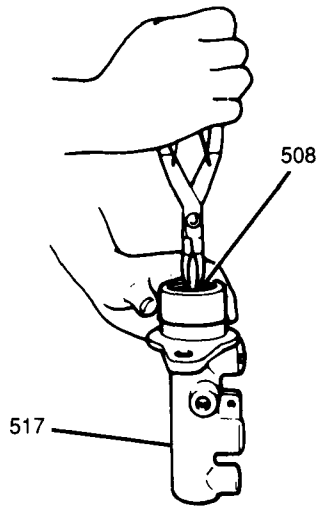

508 PISTON STOPPER C-CLIP
517 MASTER CYLINDER

PC0930-5A-EJ-RS

Figure 10 Removing Piston Stopper C-Clip

2. Piston stopper, cylinder cup, plate and primary piston.
3. Secondary piston stopper bolt.

CAUTION: Be careful when blowing secondary piston out of master cylinder with compressed air. The piston can exit the cylinder with explosive force.

4. Secondary piston using compressed air through the piston stopper bolt hole (Figure 11).

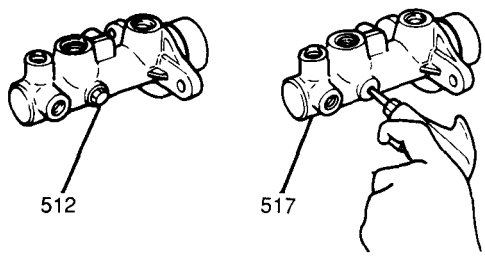

512 SECONDARY PISTON STOPPER BOLT
517 MASTER CYLINDER
PC0931-5A-EJ-RS

Figure 11 Removing Secondary Piston

5. Return spring secondary seat and secondary piston return spring.

Clean

- All master cylinder parts with clean brake fluid.

Install or Connect

1. Secondary piston return spring and return spring secondary seat.
2. Secondary piston into cylinder.
3. Primary piston, cylinder cup, plate and piston stopper into cylinder.
   - Using a wooden or plastic dowel, compress piston, cylinder cup, plate and piston stopper (Figure 12).
4. Piston stopper C-clip (Figure 12).

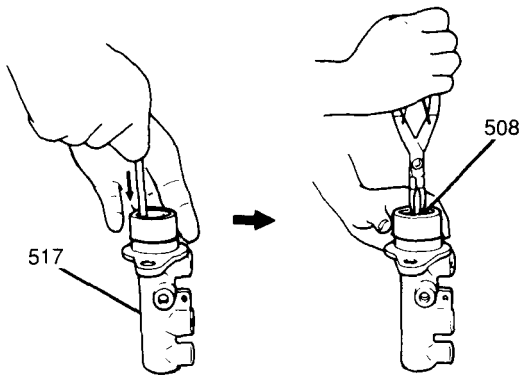

508 PISTON STOPPER C-CLIP
517 MASTER CYLINDER
PC0932-5A-EJ-RS

Figure 12 Compressing Piston and Installing C-Clip

5. Secondary piston stopper bolt with piston pushed all the way in.

Tighten

- Secondary piston stopper bolt to 10 N·m (89 lb.in.).

SPECIFICATIONS

FASTENER TORQUES

Air Cleaner (ACL) Bolts	20 N·m (15 lb.ft.)
Brake Pipe Flare Nuts	16 N·m (12 lb.ft.)
Heat Protector Shield Nuts and Bolt	20 N·m (15 lb.ft.)
Negative (-) Battery Cable-to-Negative (-) Battery Terminal Retainer	15 N·m (11 lb.ft.)
Proportioning/Differential Valve Bolt	25 N·m (19 lb.ft.)
Retaining Bracket-to-Master Cylinder Nut	27 N·m (20 lb.ft.)
Secondary Piston Stopper Bolt	10 N·m (89 lb.in.)

SERVICE PARTS INFORMATION

Component Name Used in Section 5A	Reference Name in Service Parts Catalog	Group Number
Master Cylinder	Cylinder, Brk Mas	4.650
Master Cylinder Fluid Reservoir	Reservoir, Brk, M/Cyl	4.651
Master Cylinder Fluid Reservoir Cap	Cap, Brk M/Cyl Rsvr Fluid	4.651
Master Cylinder Fluid Reservoir Connector Grommets	Grommet, Brk M/Cyl	4.651
Master Cylinder Seal	Seal, Brk M/Cyl	4.651
Secondary Piston Stopper Bolt	Bolt, Brk M/Cyl Pstn Stopper	4.653
Master Cylinder Repair Kit	Piston Kit, Brk M/Cyl	4.649

SECTION 5B1

FRONT DISC BRAKES

CAUTION: When servicing brake parts, do not create dust by grinding or sanding brake linings, or by cleaning brake parts with a dry brush or compressed air. Many brake parts contain asbestos fibers which can become airborne if dust is created during servicing. Breathing dust containing asbestos fibers may cause serious bodily harm. A water dampened cloth or water based solution should be used to remove any dust on brake parts. Equipment is commercially available to perform this washing function. These wet methods will prevent asbestos fibers from becoming airborne.

NOTICE: When fasteners are removed, always reinstall them at the same location from which they were removed. If a fastener needs to be replaced, use the correct part number fastener for that application. If the correct part number is not available, a fastener of equal size and strength (or stronger) may be used. Fasteners that are not reused, and those requiring thread-locking compound, will be called out. The correct torque values must be used when installing fasteners that require them. If the above procedures are not followed, parts or system damage could result.

CONTENTS

General Description 5B1-1
Caliper 5B1-1
Diagnosis 5B1-1
Brake Pad Inspection 5B1-1
Brake Rotor Inspection 5B1-2
Brake Rotor Tolerance and Surface Finish 5B1-2
Thickness Variation Check 5B1-2
Lateral Runout Check 5B1-2
On-Vehicle Service 5B1-4
Caliper 5B1-4
Brake Pads 5B1-5
Burnishing Brake Pads and Rotors 5B1-6
Caliper Carrier 5B1-6
Brake Rotor 5B1-7
Unit Repair 5B1-9
Refinishing Brake Rotors 5B1-9
Off-Vehicle Procedure 5B1-9
Caliper 5B1-9
Specifications 5B1-10
Fastener Torques 5B1-10
Brake Rotor Specifications 5B1-10
Service Parts Information 5B1-10
Special Tools 5B1-11

GENERAL DESCRIPTION

CALIPER

The caliper is mounted on the caliper carrier with two caliper pin bolts. These bolts allow the caliper to move laterally against the brake rotor. The caliper is a one-piece casting with the inboard side containing the piston bore. A square cut rubber seal is located in a groove in the piston bore which provides the hydraulic seal between the piston and the caliper wall.

As the brake pedal is pressed, hydraulic pressure is applied to the caliper piston. This pressure pushes the inboard brake pad against the inboard braking surface of the rotor. As the force increases against the rotor, the caliper assembly moves inboard and provides a clamping action on the rotor.

When the brake pedal is released, the piston seal returns to its original position, pulling the piston back into the caliper bore. This will create a running clearance between the inner brake pad and the rotor.

Important

- Replace all components included in the repair kit used to service braking components.
- Lubricate rubber parts with clean brake fluid to ease in assembly.
- Do not use lubricated shop air on brake parts. The lubricant will cause damage to the rubber seals and components.
- If any hydraulic component is removed or disconnected, it will be necessary to bleed all or part of the brake system. Refer to SECTION 5 for brake system bleeding procedures.
- Always replace brake pads in axle sets.

DIAGNOSIS

BRAKE PAD INSPECTION

Figure 1

Inspect the brake pad every 9 600 km (6,000 miles) and any time the wheels are removed (tire rotation, etc). Check both ends of the outer pad by looking through the brake pad inspection hole in the caliper (Figure 1). These are the points where the highest rate of wear normally occurs. At the same time, check the thickness of the inner pad to ensure that it has not worn prematurely.

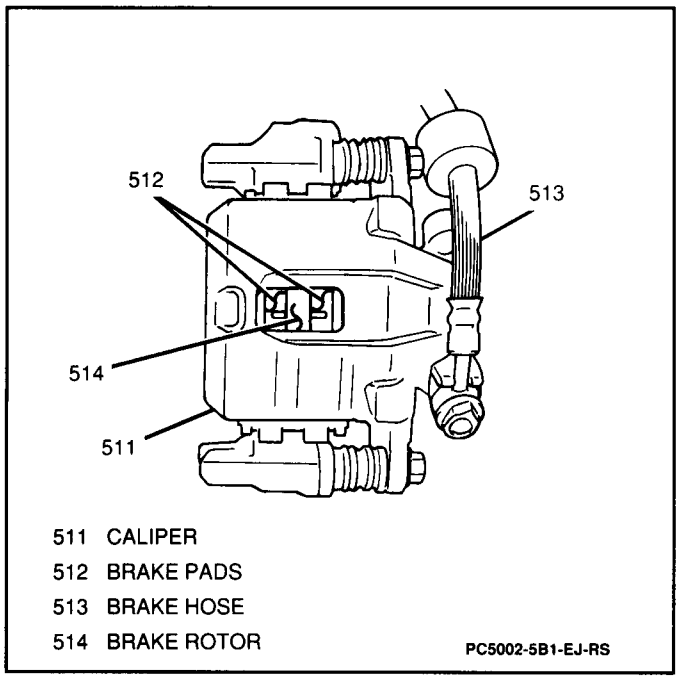

Figure 1 Brake Pad Inspection Hole

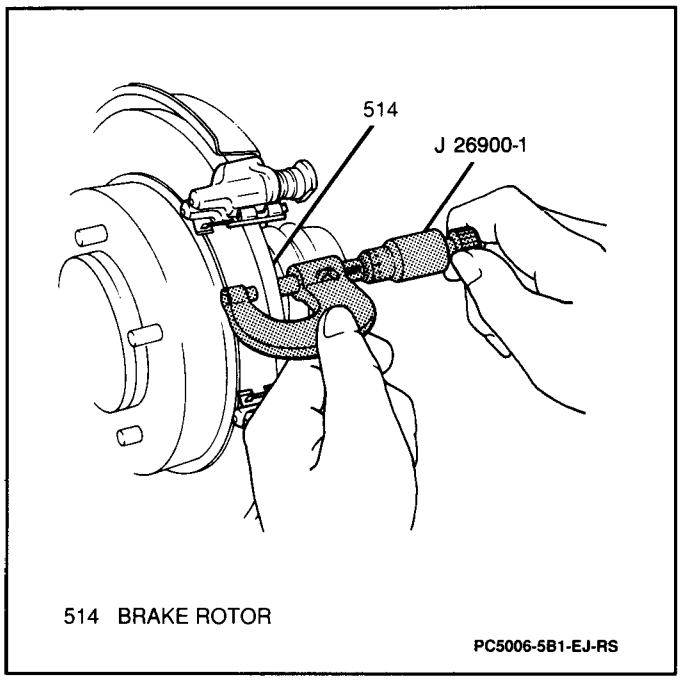

Figure 2 Measuring Rotor Thickness

BRAKE ROTOR INSPECTION

Brake Rotor Tolerance and Surface Finish

In the manufacturing of brake rotors, tolerances of the braking surfaces for flatness, thickness variations and lateral runout are held very closely. The maintenance of close tolerances on the shape of braking surfaces is necessary to prevent roughness in braking performance.

In addition to these tolerances, the surface's finish must be held to a specified range. The control of the braking surface finish is necessary to avoid pulls, erratic performance and to extend lining life.

Light scoring of the rotor surfaces not exceeding 0.38 mm (0.015-inch) in depth (which may result from normal use) will not affect brake operation.

Thickness Variation Check

Figure 2

Tool Required:
J 26900-1 Outside Micrometer

Thickness variation can be checked by measuring the thickness of the rotor at four or more points around its circumference with a J 26900-1. All measurements must be made at the same distance in from the edge of the rotor. A rotor that varies by more than 0.013 mm (0.0005-inch) can cause pedal pulsation and/or front end vibration during brake applications. A rotor that does not meet these specifications should be refinished to specifications or replaced.

Lateral Runout Check

Figure 3

Tools Required:
J 8001 Dial Indicator Set
J 26900-13 Magnetic Base

1. Raise and suitably support vehicle. Refer to SECTION 0A.
2. Remove wheel and tire assembly. Refer to SECTION 3E.
3. Remove caliper. Refer to "Caliper" under "On-Vehicle Service" later in this section.
4. Invert and install all four wheel nuts to retain brake rotor.
5. Fasten a J 26900-13 and a J 8001 to the strut so that the indicator button contacts the brake rotor about 10 mm (0.39-inch) from the rotor edge (Figure 3).

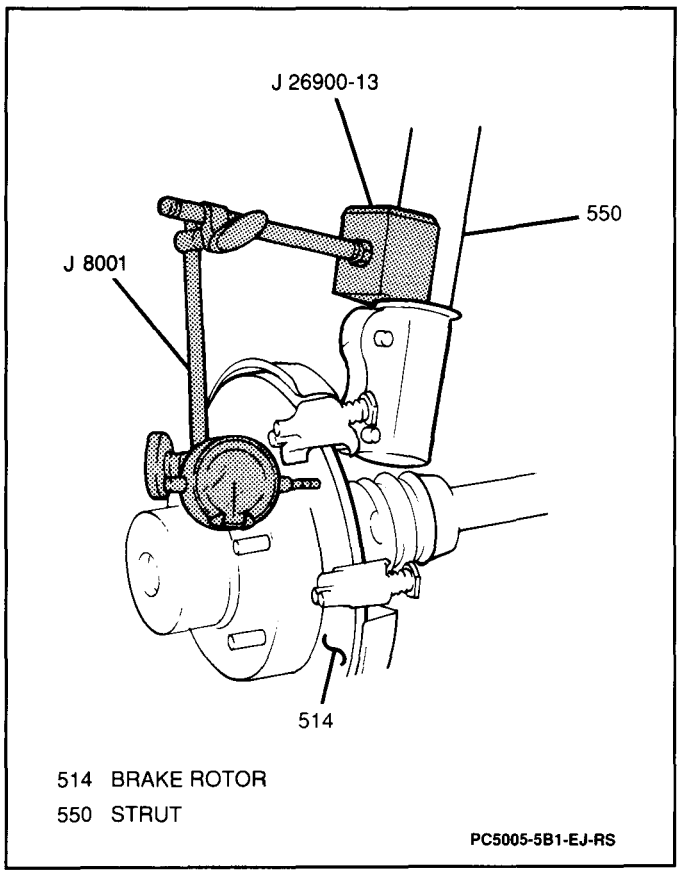

Figure 3 Measuring Rotor Lateral Runout

6. Zero the J 8001.
7. Move the rotor one complete revolution and observe the total indicated runout.
8. If lateral runout exceeds 0.15 mm (0.006-inch), clean wheel hub and rotor mating surfaces and remeasure. If lateral runout still exceeds specifications, index the rotor on the hub one or two bolt positions from the original position. If the lateral runout cannot be corrected by indexing the rotor, check the hub and bearing assembly for excessive play. If hub and bearing assembly are within specifications, refer to "Brake Rotor Tolerance and Surface Finish" earlier in this section.

A rotor that does not meet the lateral runout specification should be refinished or replaced as necessary.

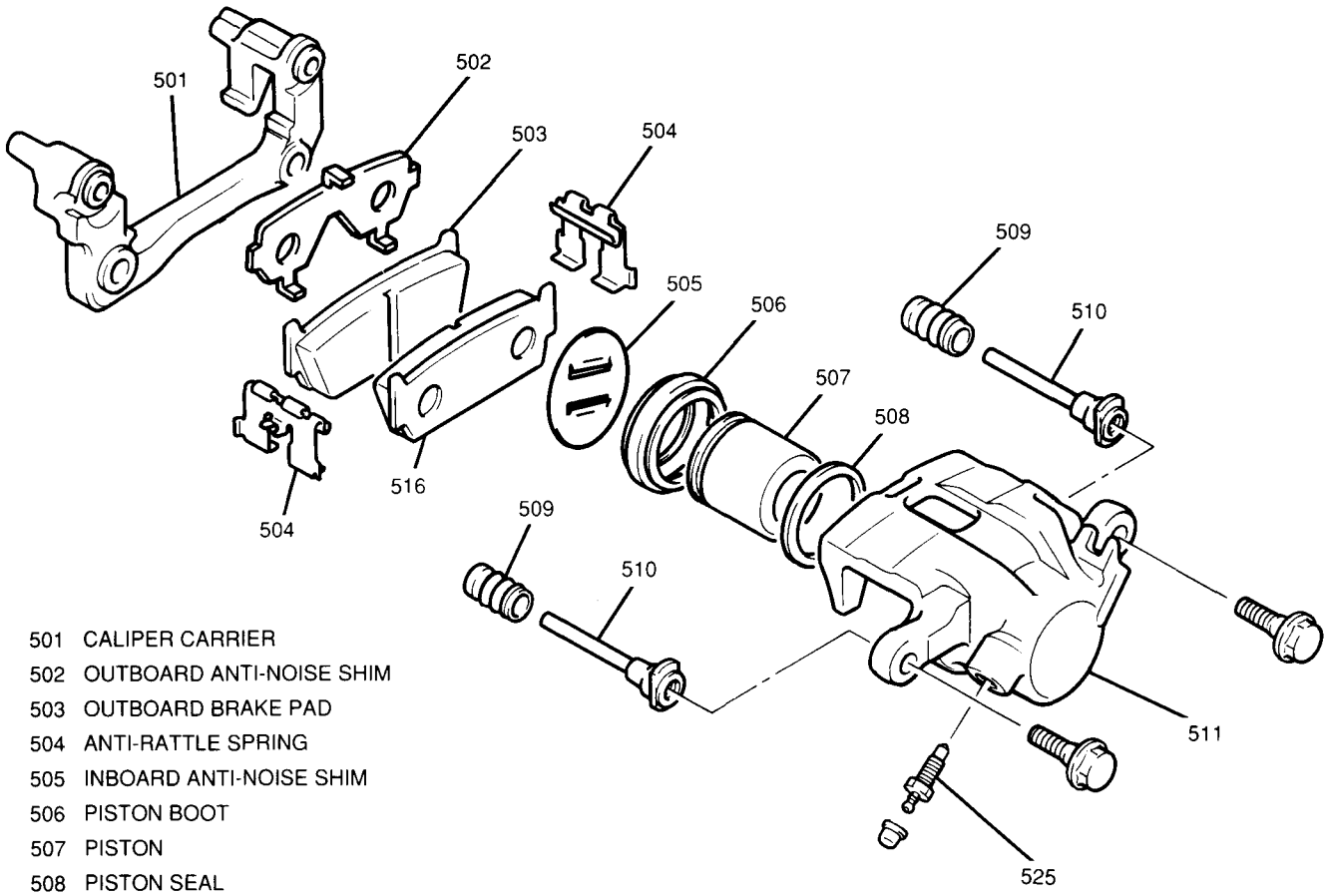

501 CALIPER CARRIER
502 OUTBOARD ANTI-NOISE SHIM
503 OUTBOARD BRAKE PAD
504 ANTI-RATTLE SPRING
505 INBOARD ANTI-NOISE SHIM
506 PISTON BOOT
507 PISTON
508 PISTON SEAL
509 CALIPER PIN BOLT BOOT
510 CALIPER PIN BOLT
511 CALIPER
516 INBOARD BRAKE PAD
525 BLEEDER VALVE

Figure 4 Caliper Assembly

ON-VEHICLE SERVICE

CALIPER

Figures 4, 5 and 6

Remove or Disconnect

- Siphon two-thirds of the brake fluid from the master cylinder fluid reservoir.
- Raise and suitably support vehicle. Refer to SECTION 0A.

1. Wheel. Refer to SECTION 3E.
   - Position C-clamp around the outer pad and caliper and tighten until the piston bottoms in its bore.
2. Brake hose union bolt (Figure 5). Place a container beneath brake hose to catch escaping brake fluid. Discard the two union fitting washers.

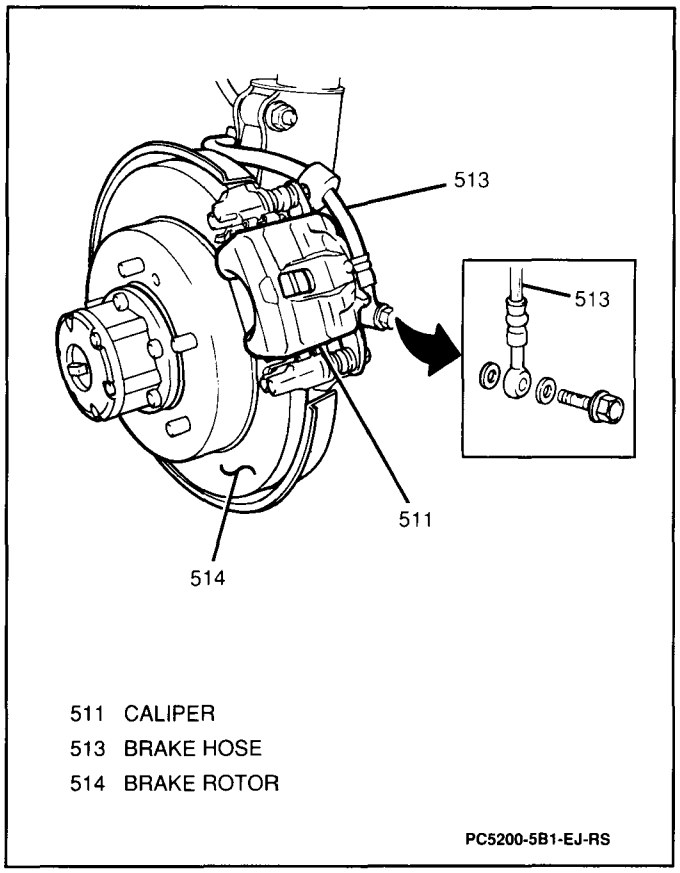

Figure 5 Brake Hose-to-Caliper Connection

3. Two caliper pin bolts (Figure 6).

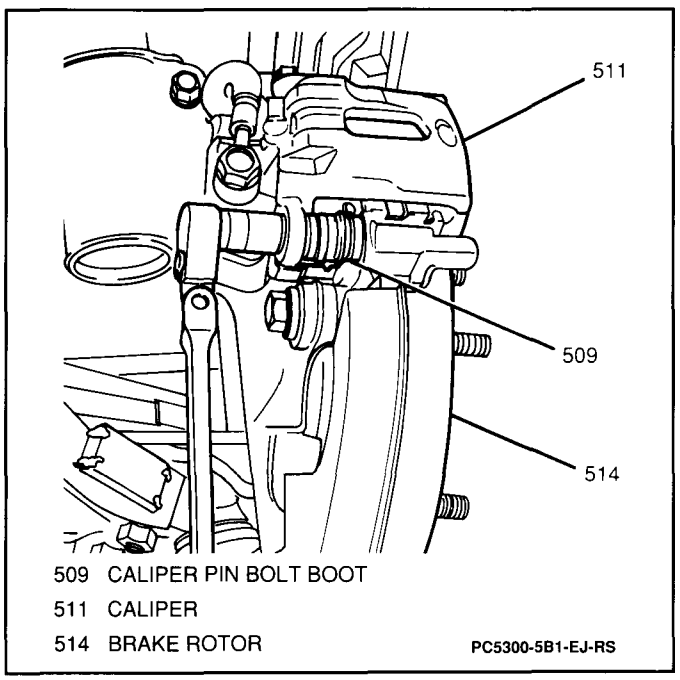

Figure 6 Removing Caliper Pin Bolts

4. Caliper assembly from vehicle.
5. Inboard anti-noise shim from caliper (if required).

Install or Connect

1. Inboard anti-noise shim to caliper (if removed).
2. Caliper assembly to vehicle; secure with two caliper pin bolts.

Tighten

- Caliper pin bolts to 27 N·m (20 lb.ft.).

3. Brake hose union bolt with two new union fitting washers.

Tighten

- Brake hose union bolt to 23 N·m (17 lb.ft.).

4. Wheel. Refer to SECTION 3E.

- Lower vehicle.
- Fill master cylinder fluid reservoir. Refer to SECTION 5.
- Bleed brake system. Refer to SECTION 5.

BRAKE PADS

Figures 4, 7, 8 and 9

Remove or Disconnect

- Siphon two-thirds of the brake fluid from the master cylinder fluid reservoir.
- Raise and suitably support vehicle. Refer to SECTION 0A.

1. Wheel. Refer to SECTION 3E.

- Position C-clamp around the outer pad and caliper and tighten until the piston bottoms in its bore.

2. Brake hose E-clip (Figure 7).

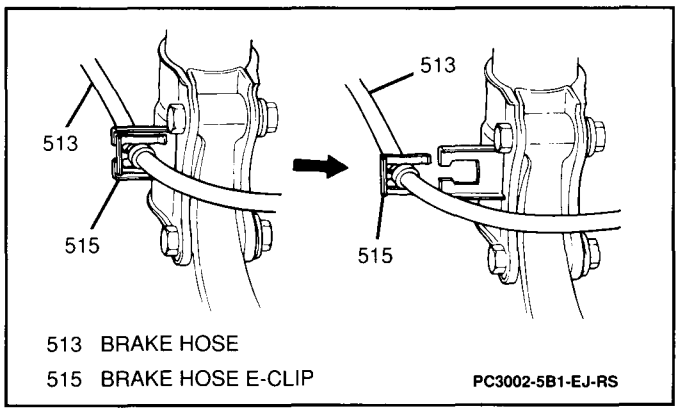

Figure 7 Brake Hose E-Clip

3. Two caliper pin bolts (Figure 6).
4. Caliper assembly from caliper carrier. Suspend caliper with wire to prevent damage to the brake hose (Figure 8).

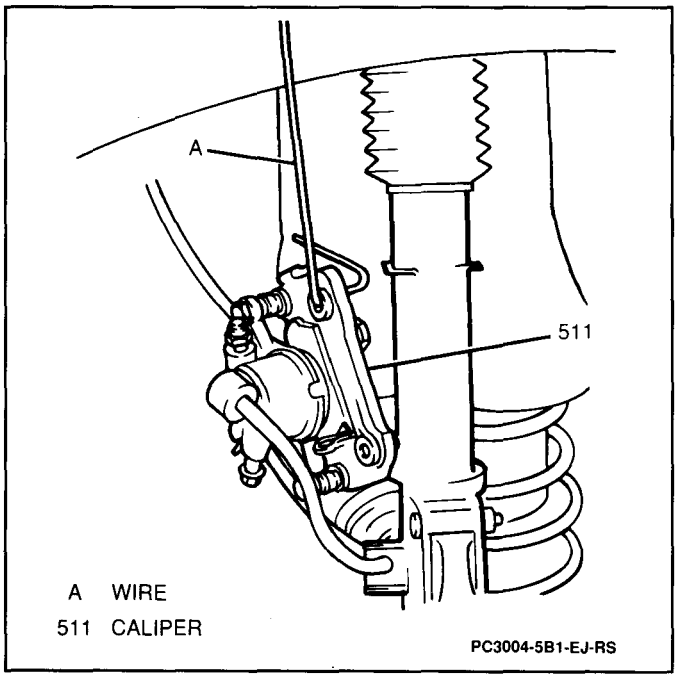

Figure 8 Suspending Caliper

5. Inboard anti-noise shim from caliper and discard (Figure 4).
6. Outboard anti-noise shim from outboard brake pad and discard (Figure 4).
7. Inboard and outboard brake pads from caliper carrier (Figure 9).

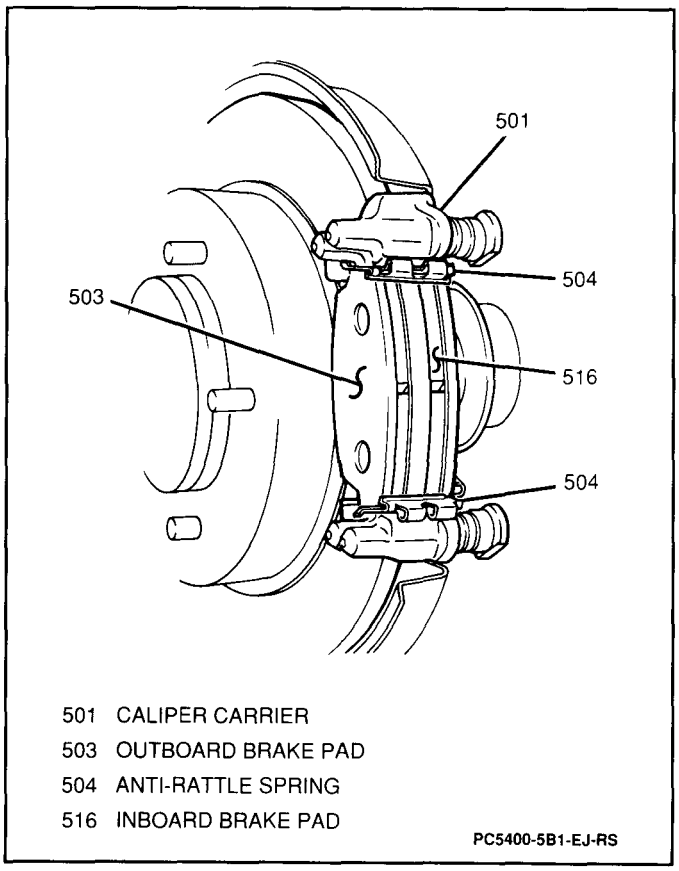

Figure 9 Brake Pads

8. Two anti-rattle springs from caliper carrier.

Install or Connect

1. Two anti-rattle springs to caliper carrier.
2. New outboard anti-noise shim to outboard brake pad.
3. New inboard anti-noise shim to caliper.
4. Inboard and outboard brake pads to caliper carrier.
5. Caliper assembly to caliper carrier; secure with two caliper pin bolts.

Tighten

- Caliper pin bolts to 27 N·m (20 lb.ft.).

6. Brake hose E-clip.
7. Wheel. Refer to SECTION 3E.

- Lower vehicle.
- Fill master cylinder fluid reservoir. Refer to SECTION 5.

Burnishing Brake Pads and Rotors

After brake pads have been replaced and/or brake rotors have been refinished, it is recommended that the new braking surface be broken in, or burnished. This can be accomplished by making 20 stops from 48 km/h (30 mph), using medium to firm brake pedal pressure. Take care to avoid overheating the brakes.

CALIPER CARRIER

Figures 6 through 10

Remove or Disconnect

- Siphon two-thirds of the brake fluid from the master cylinder fluid reservoir.
- Raise and suitably support vehicle. Refer to SECTION 0A.

1. Wheel. Refer to SECTION 3E.

- Position C-clamp around the outer pad and caliper and tighten until the piston bottoms in its bore.

2. Brake hose E-clip (Figure 7).
3. Two caliper pin bolts (Figure 6).
4. Caliper assembly from caliper carrier. Suspend caliper with wire to prevent damage to the brake hose (Figure 8).
5. Inboard and outboard brake pads from caliper carrier (Figure 9).
6. Two anti-rattle springs from caliper carrier.
7. Two mounting bolts and caliper carrier from vehicle (Figure 10).

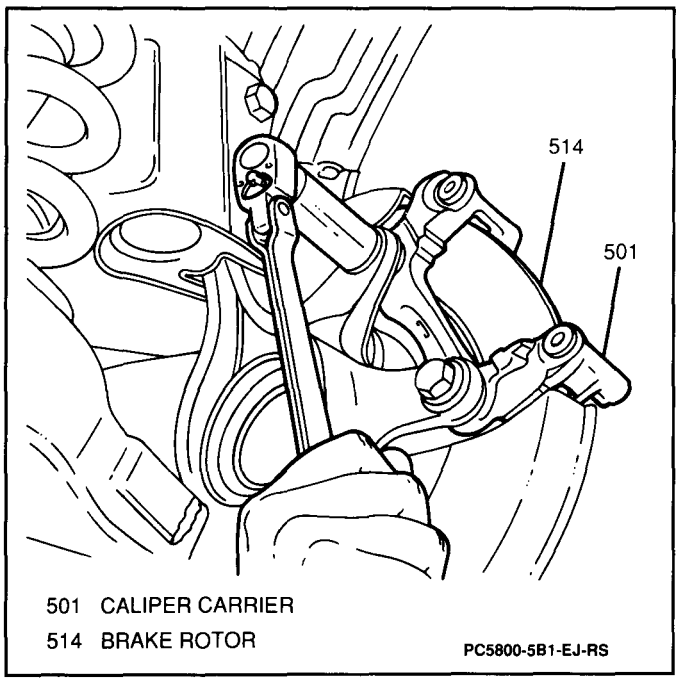

Figure 10 Removing Caliper Carrier Mounting Bolts

8. Two caliper pins, with boots, from caliper carrier (if required).

Install or Connect

1. Two caliper pins, with boots, to caliper carrier (if removed).
2. Caliper carrier to vehicle; secure with two mounting bolts.

Tighten

- Caliper carrier mounting bolts to 88 N·m (65 lb.ft.).

3. Two anti-rattle springs to caliper carrier.
4. Inboard and outboard brake pads to caliper carrier.
5. Caliper to caliper carrier; secure with two caliper pin bolts.

Tighten

- Caliper pin bolts to 27 N·m (20 lb.ft.).

6. Brake hose E-clip.
7. Wheel. Refer to SECTION 3E.

- Lower vehicle.
- Fill master cylinder fluid reservoir. Refer to SECTION 5.

BRAKE ROTOR

Figures 2, 3, 8, 11, 12 and 13

Remove or Disconnect

- Siphon two-thirds of the brake fluid from the master cylinder fluid reservoir.
- Raise and suitably support vehicle. Refer to SECTION 0A.

1. Wheel. Refer to SECTION 3E.

- Position C-clamp around the outer pad and caliper and tighten until the piston bottoms in its bore.

2. Brake hose E-clip.
3. Two caliper carrier mounting bolts (Figure 11).

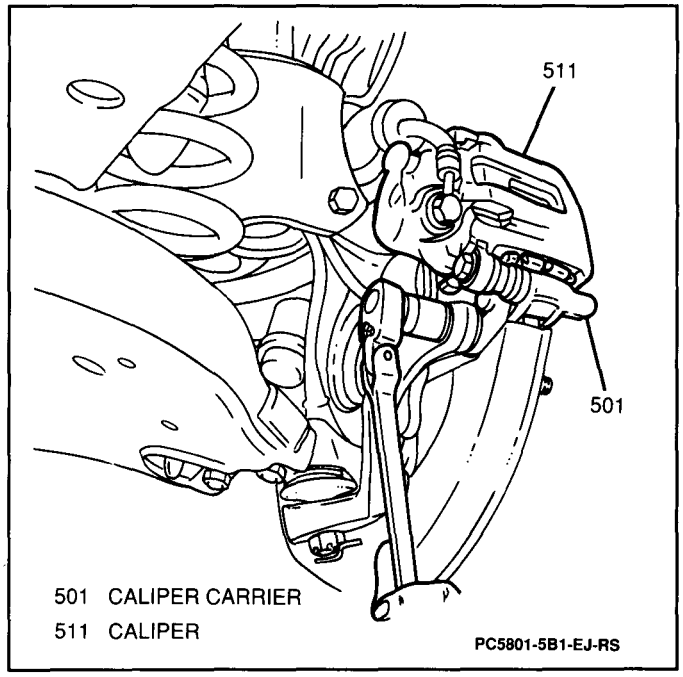

Figure 11 Removing Caliper/Caliper Carrier as an Assembly

- Lift caliper/caliper carrier, along with brake pads, off of brake rotor (Figure 12).

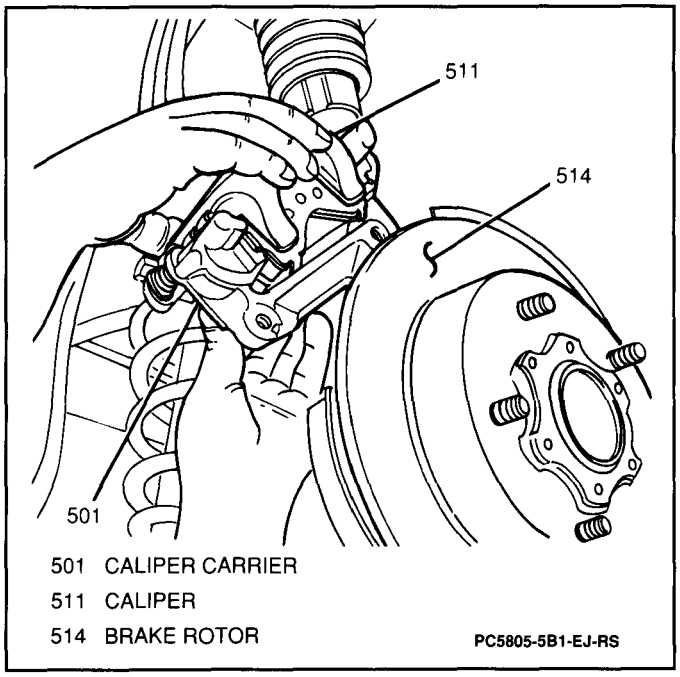

Figure 12 Removing Caliper/Caliper Carrier from Brake Rotor

- Suspend caliper/caliper carrier with a wire to prevent damage to the brake hose (Figure 8).

Measure

Tools Required:
J 8001 Dial Indicator Set
J 26900-1 Outside Micrometer
J 26900-13 Magnetic Base

1. Disc brake rotor lateral runout using a J 8001 and a J 26900-13 (Figure 3). If lateral runout exceeds 0.15 mm (0.006-inch), the rotor must be machined to bring within specification.
2. Disc brake rotor thickness using a J 26900-1 (Figure 2). If rotor thickness is less than 8.0 mm (0.315-inch), the rotor must be replaced.

4. Brake rotor from wheel hub. If rotor cannot be removed by hand, install two 8 mm bolts into rotor. Tightening the bolts will force rotor off of wheel hub (Figure 13).

Install or Connect

1. Brake rotor to wheel hub.
2. Caliper/caliper carrier into position; secure with two caliper carrier mounting bolts.

Tighten

- Caliper carrier mounting bolts to 88 N·m (65 lb.ft.).

3. Brake hose E-clip.
4. Wheel. Refer to SECTION 3E.

- Lower vehicle.
- Fill master cylinder fluid reservoir. Refer to SECTION 5.

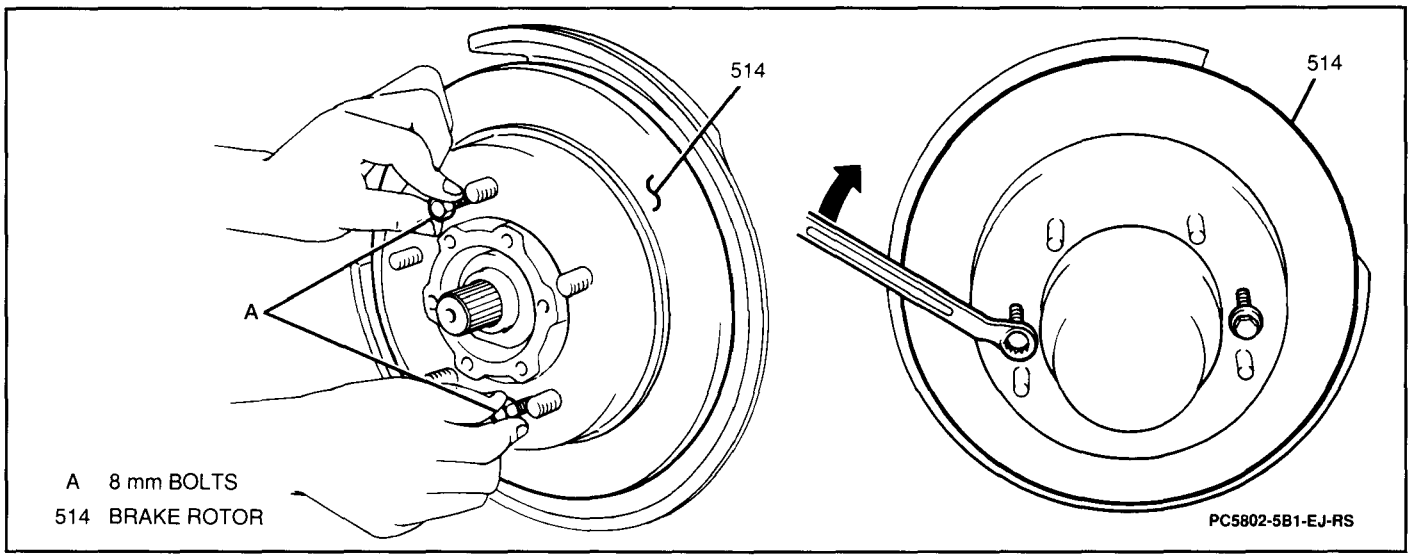

Figure 13 Removing Brake Rotor

UNIT REPAIR

REFINISHING BRAKE ROTORS

Do not refinish brake rotors when performing routine brake maintenance such as replacing worn disc brake pads. Refinish a rotor only under the following circumstances:

- There is a complaint of brake pulsation.
- There are heat spots or excessive scoring.

All brake rotors have a minimum thickness dimension cast into them. This dimension is the minimum wear dimension and not a refinish dimension. Do not use a brake rotor that will not meet the specifications. If the rotor thickness will be less than 8.0 mm (0.315-inch) after refinishing, the rotor must be replaced. A rotor which has been refinished too thin will not have proper heat transfer capabilities.

Accurate control of the rotor tolerances is necessary for proper performance of the disc brakes. Machining of the rotor should be done only with precision equipment. Machining equipment should be serviced on a regular basis following the manufacturer's recommended maintenance procedure.

When refinishing rotors, the attaching adapters, tool holders, vibration dampeners and tool bits must be in good condition. Always use sharp cutting tools or bits and use only replacement cutting bits recommended by the equipment manufacturer. Dull or worn tools leave a poor surface finish which will affect initial braking performance. Vibration dampening attachments should always be used when refinishing braking surfaces. These attachments eliminate tool chatter and will result in better surface finish. Make sure these adapters are clean and free of nicks.

Off-Vehicle Procedure

Locate the deepest score and turn the rotor micrometer knobs until the tool bit bottoms out at the deepest point of the score. Zero the scale and back out the tool bits. Advance the cutter handwheel until the bits have cleared the inner edge of the rotor face. Adjust the micrometer knobs for approximately 0.0127 mm (0.0005-inch) more than the first reading. This will ensure clearing the rotor in one cut.

The optimum speed for refinishing braking surfaces is a spindle speed of 200 rpm. Crossfeed for rough cutting should range from 0.15 to 0.25 mm (0.006 to 0.010-inch) per revolution. Finish cuts should be made at crossfeed no greater than 0.05 mm (0.002-inch) per revolution.

It is very important that the rotor surface be made nondirectional by dressing the rotor surfaces with a sanding disc power tool such as Ammco 8350 Safe Swirl Disc Rotor Grinder, or equivalent, using 120 grit aluminum oxide sandpaper. Sand each rotor surface with moderate pressure for a minimum of 60 seconds. An alternate method is to use a sanding block with 150 grit aluminum oxide sandpaper. With the rotor turning at approximately 150 rpm, sand each rotor surface for a minimum of 60 seconds using moderate pressure. After the rotor has been sanded, clean each surface with denatured alcohol or suitable brake cleaner.

After refinishing rotors, replace any rotor that will not meet a minimum thickness of 8.0 mm (0.315-inch). Do not use a brake rotor that will not meet specifications.

CALIPER

Figures 4, 14, 15 and 16

Disassemble

- Insert a block of hard wood into the caliper interior to catch the piston as it is forced out of the bore with compressed air.

CAUTION: Do not place fingers in front of the piston in an attempt to catch or protect the piston when applying compressed air to the caliper brake hose connector hole. Serious injury could result. Use only enough air to ease the piston out of the bore. If the piston is blown out, even with the block of wood in place, damage may occur.

1. Piston from caliper by applying compressed air to the caliper brake hose connector hole.
2. Rubber boot from caliper groove.
3. Piston seal from caliper (Figure 14).

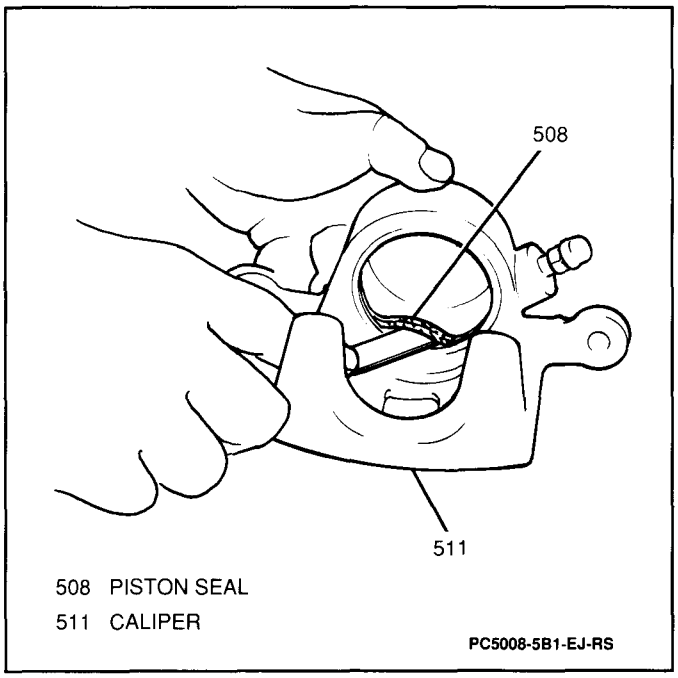

Figure 14 Removing Piston Seal from Caliper

4. Bleeder valve from caliper.
5. Caliper pin bolts, with boots, from caliper.

Clean

- Bleeder valve, caliper bore, caliper passages and piston with denatured alcohol. Use dry compressed air to dry parts and blow out passages.

Inspect

1. Piston for scoring, corrosion, and any damage to the chrome plating. Replace piston if any of these conditions are observed.

2. Caliper bore for scoring, pitting and corrosion. Use crocus cloth to polish out any light corrosion. If corrosion cannot be removed, replace the caliper.

Assemble

1. New caliper pin bolts and boots into caliper.
2. Bleeder valve to caliper.
3. New piston seal into caliper bore.
4. New piston boot onto piston (Figure 15).

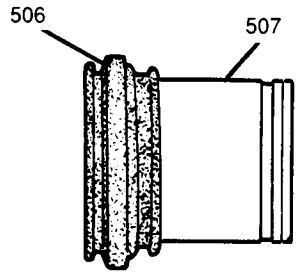

Figure 15 Piston with Piston Boot

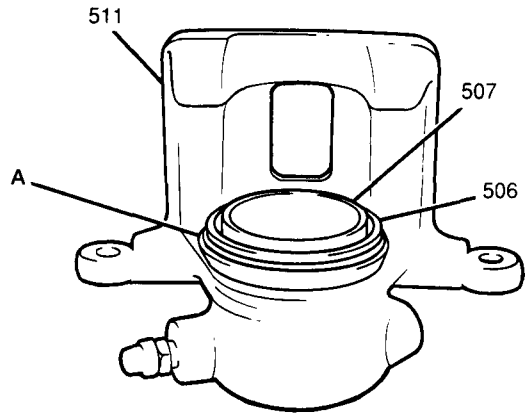

Figure 16 Piston Boot Groove

5. Piston into caliper.
- Fit piston boot onto caliper groove (Figure 16).

SPECIFICATIONS

FASTENER TORQUES

Brake Hose Union Bolt	23 N·m (17 lb.ft.)
Caliper Pin Bolts	27 N·m (20 lb.ft.)
Caliper Carrier Mounting Bolts	88 N·m (65 lb.ft.)

BRAKE ROTOR SPECIFICATIONS

Rotor Thickness — Minimum	8.0 mm (0.315 in.)
Rotor Lateral Runout — Maximum	0.15 mm (0.006 in.)

SERVICE PARTS INFORMATION

Component Name Used in Section 5B1	Reference Name in Service Parts Catalog	Group Number
Anti-Rattle Spring	Spring, Frt Brk Caliper Anti Rattle.	4.669
Brake Pads	Pad Kit, Frt Disc Brk	5.017
Brake Rotor	Disc, Front Brake	5.809
Caliper	Caliper, Front Brake	4.665
Caliper Carrier	Carrier, Front Brake Caliper	4.665
Caliper Pin Bolt	Pin, Frt Brk Clpr Cyl Slide	4.665
Caliper Pin Bolt Boot	Boot, Frt Brk Clpr Bushing Dust Pin	4.665
Caliper Piston, Boot and Seal	Seal, Frt Brk Clpr Pstn	4.667
Caliper Bleeder Valve	Plug, Brk Cyl Bledr	4.666
Inboard Anti-Noise Shim	Shim, Frt Brk Cal Anti-Noise	4.669
Outboard Anti-Noise Shim	Shim, Frt Brk Pad Anti-Noise	4.665

SPECIAL TOOLS

1
J 8001

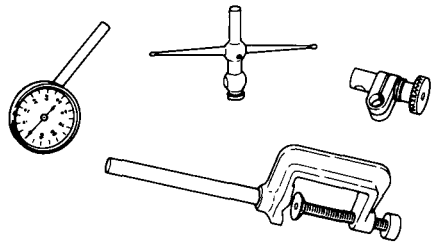

2
J 26900-13

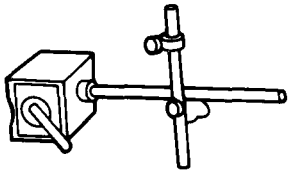

3
J 26900-1

1 DIAL INDICATOR SET
2 MAGNETIC BASE
3 OUTSIDE MICROMETER

PC0560-5B1-EJ-RS

SECTION 5C1

LEADING/TRAILING DRUM BRAKES

NOTICE: When fasteners are removed, always reinstall them at the same location from which they were removed. If a fastener needs to be replaced, use the correct part number fastener for that application. If the correct part number fastener is not available, a fastener of equal size and strength (or stronger) may be used. Fasteners that are not reused, and those requiring thread-locking compound, will be called out. The correct torque values must be used when installing fasteners that require them. If the above procedures are not followed, parts or system damage could result.

NOTICE: Avoid spilling brake fluid on any of the vehicle's painted surfaces, wiring cables or electrical connectors. Brake fluid will damage paint and electrical connections. If any fluid is spilled on the vehicle, flush area with water to lessen damage.

CONTENTS

General Description 5C1-1
Diagnosis 5C1-2
Lining Inspection 5C1-2
Drum Inspection 5C1-2
Surface Finish 5C1-2
Inside Diameter Check 5C1-2
Taper Check 5C1-2
Runout Check 5C1-2
Balance 5C1-2
On-Vehicle Service 5C1-4
Drum 5C1-4
Linings 5C1-5
Wheel Cylinder 5C1-6
Backing Plate 5C1-6
Adjustment 5C1-7
Parking Brake 5C1-7
Unit Repair 5C1-8
Drum 5C1-8
Cracked, Scored or Grooved 5C1-8
Out-of-Round or Tapered 5C1-8
Refinishing 5C1-8
Wheel Cylinder 5C1-8
Specifications 5C1-9
General Specifications 5C1-9
Fastener Tightening Specifications 5C1-9
Service Parts Information 5C1-9
Special Tools 5C1-10

GENERAL DESCRIPTION

The rear drum brake assembly is a duo-servo design. In the duo-servo brake, the force which the wheel cylinder applies to the leading (front) shoe is multiplied by the lining friction against the rotating drum to provide a very large force applied to the trailing (rear) shoe. Torque from the brake shoes is transferred to the anchor pins, through the backing plate and to the axle housing flange.

When the brakes are applied, the wheel cylinder pistons move both shoes out to contact the drum with enough energy to overcome the rotation of the wheels, slowing and, with continued application, stopping the vehicle.

Adjustment for both the leading and trailing shoes and linings is automatic when the brakes are applied.

It is normal for the leading shoe to wear at a faster rate than the trailing shoe. Reinstall brake shoes in the same position they were removed from. Do not switch the position of shoes that have been in service as this may render the self-adjustment feature inoperative and result in increased pedal travel.

Important

- Replace all components included in repair kits used to service this drum brake system.
- Lubricate rubber parts with clean brake fluid to ease assembly.
- To prevent damage to rubber components, do not use lubricated shop air on brake parts.
- If any hydraulic component is removed or disconnected, it may be necessary to bleed all or part of the brake system.
- Replace shoes and linings in axle sets only.
- The torque values specified are for dry, unlubricated fasteners.
- Perform service operations on a clean bench free from all mineral oil materials.

CAUTION: When servicing brake parts, do not create dust by grinding or sanding brake linings, or by cleaning brake parts with a dry brush or compressed air. Many brake parts contain asbestos fibers which can become airborne if dust is created during servicing. Breathing dust containing asbestos fibers may cause serious bodily harm. A water-dampened cloth or water based solution should be used to remove any dust on brake parts. Equipment is commercially available to perform this washing function. These wet methods will prevent asbestos fibers from becoming airborne.

DIAGNOSIS

LINING INSPECTION

Inspect the brake linings every 10 000 km (6,000 miles) or whenever brake drums are removed. Brake linings should be inspected for cracks, chipping, glazing or uneven wear. All of these conditions could be signs of serious problems in the drum brake assembly. If any of these conditions are noted, brake shoes must be replaced and all components of the rear brakes must be inspected for the cause and further problems. Replace brake shoe whenever the thickness of lining is less than 3 mm (0.12-inch). Brake shoe and lining assemblies should always be replaced in axle sets.

DRUM INSPECTION

Pulsation in the brake pedal is usually corrected by servicing the front brakes; service the rear brakes only if the problem persists. To determine if the front or rear brakes are at fault, drive the vehicle at low speed in an area away from people and moving traffic (such as a large parking lot). Apply the parking brake and drive slowly forward for a short distance. Feel for the pulsation. If it is not noticed, the fault is probably in the front brakes.

Surface Finish

Whenever brake drums are removed, they should be thoroughly cleaned and inspected for cracks, scores, deep grooves, out-of-round and taper. Some minor surface wear is normal and will not affect brake operation. However, inside diameter should never exceed 222 mm (8.740-inches).

A cracked drum is unsafe for further use and must be replaced. Never attempt to weld a cracked drum. Smooth up any slight scores. Heavy or extensive scoring will cause excessive brake lining wear, and it may be necessary to resurface the drum braking surface.

If brake linings are to be replaced, always refinish a grooved drum. A grooved drum, if used with new lining, will wear the lining and make proper brake performance difficult to obtain.

If the brake linings are slightly worn (but to be reused) and the drum is grooved, polish the drum with fine emery cloth but do not refinish. Eliminating all grooves in the drum and smoothing the ridges on the lining would require removal of too much metal and lining, while if left alone, the grooves and ridges match and satisfactory service can be obtained.

Inside Diameter Check

Before refinishing a drum, measure the inside diameter. During refinishing, only enough metal should be removed to obtain a true, smooth braking surface. If a drum will not true up when refinished to the maximum allowable inside diameter of 222 mm (8.740-inches), the drum must be replaced. If inside diameter exceeds maximum limits, proper heat dissipation will be adversely affected and may cause distortion of the drum.

Taper Check

An out-of-round or improperly tapered drum makes accurate brake shoe adjustment impossible and is likely to cause excessive wear of other parts of the brake mechanism due to its eccentric action. An out-of-round drum can also cause severe and irregular tire tread wear as well as a pulsating brake pedal. When the drum exceeds the specification limits of 0.01 mm (0.0004-inch) for out-of-round or 0.1 mm (0.004-inch) for taper, refinish the drum to true up the braking surface. If drum cannot be brought within specifications by refinishing, it must be replaced.

When measuring a drum for out-of-round, taper and wear, take measurements at the open and closed edges of the machined surface and at right angles to each other.

Runout Check

Runout is a low spot in the "roundness" of a drum. If runout exceeds maximum of 0.04 mm (0.0016-inch), drum must be replaced as improper stopping or pulsating brakes could result.

Balance

When brake drums are manufactured, they are balanced and weights are welded in place as required. Do not remove any of these weights. Balance of the drum can be usually be checked on a off-vehicle balancer. An out-of-balance drum must be replaced.

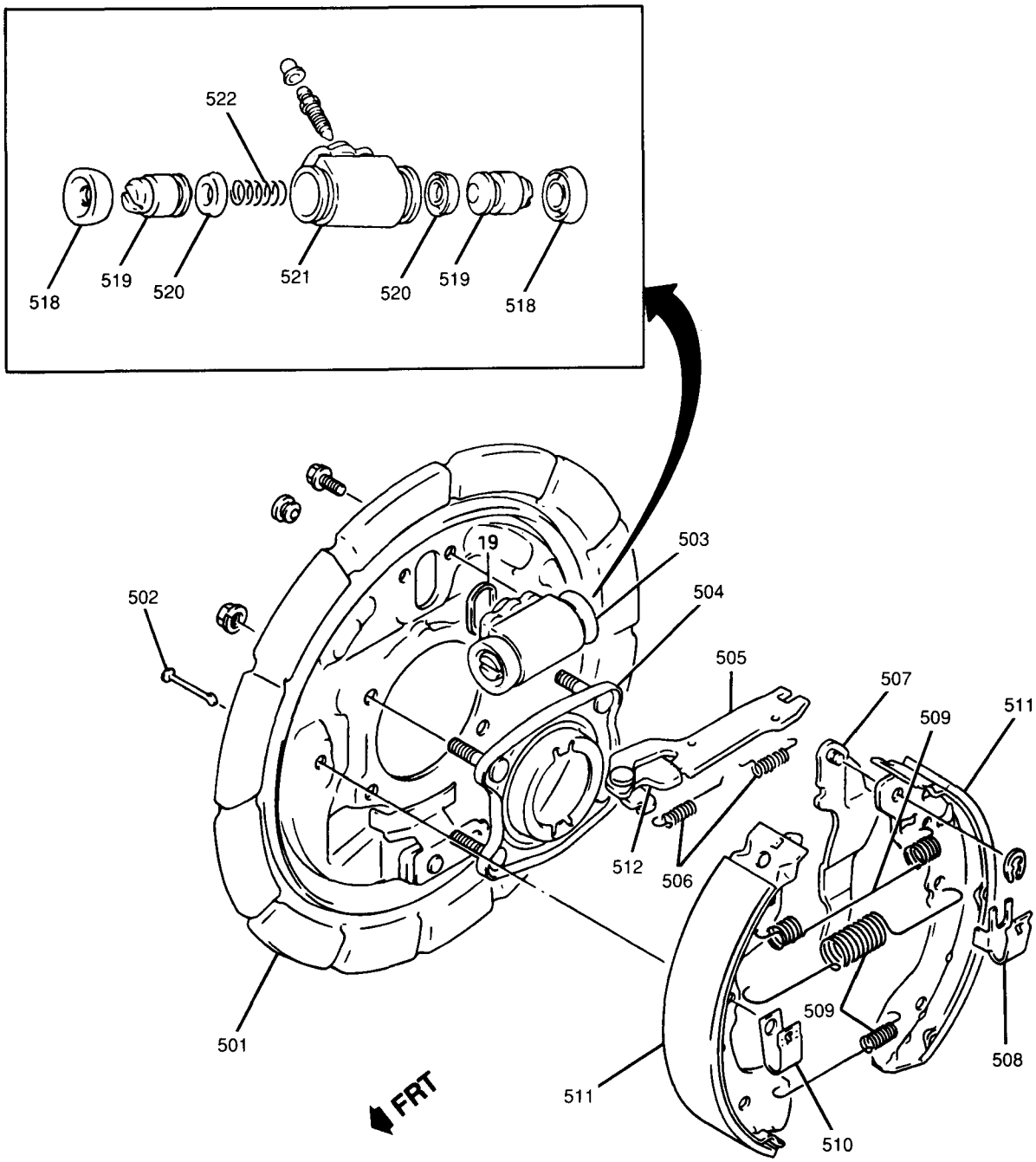

501 BACKING PLATE
502 HOLD DOWN PIN
503 WHEEL CYLINDER
504 WHEEL BEARING RETAINER
505 PARKING BRAKE ROD
506 UPPER RETURN SPRINGS
507 PARKING BRAKE LEVER
508 HOLD DOWN SPRING
509 RETURN SPRINGS
510 RETAINING SPRING
511 BRAKE SHOES
512 RATCHET
518 WHEEL CYLINDER BOOT
519 WHEEL CYLINDER PISTON
520 WHEEL CYLINDER CUP SEAL
521 WHEEL CYLINDER BODY
522 WHEEL CYLINDER SPRING

PC1401-5C1-EJ-RS

Figure 1 Drum Brake Assembly

ON-VEHICLE SERVICE

DRUM

Figures 1 through 5

Remove or Disconnect

Tools Required:
J 2619-01 Slide Hammer
J 34866 Brake Drum Remover

- Apply parking brake.
- Release parking brake cable at brake lever.
  A. Remove two parking lever cover screws at rear of cover and lift up cover enough to gain access to parking brake cable locknut.
  B. Loosen parking brake cable locknut (Figure 2).

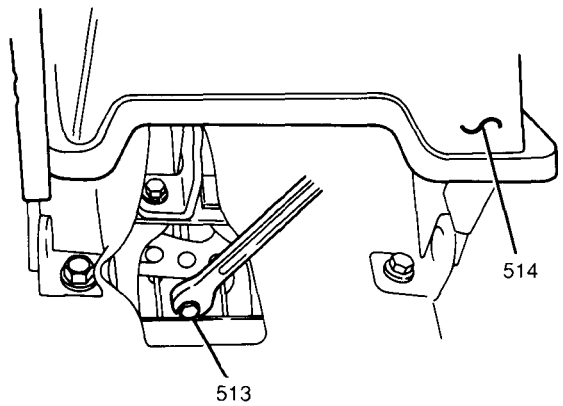

513 PARKING BRAKE CABLE LOCKNUT
514 PARKING BRAKE LEVER COVER
PC1402-5C1-EJ-RS

Figure 2 Loosening Parking Brake Cable Locknut

- Raise and suitably support vehicle. Refer to SECTION 0A.

1. Rear wheel and tire assembly. Refer to SECTION 3E.
2. Four brake drum retaining nuts from drum.
3. Backing plate plug from backing plate.

- Insert a screwdriver into plug hole and push hold down spring to obtain maximum brake shoe-to-drum clearance.

4. Brake drum using a J 2619-01 and J 34866 (Figure 3).

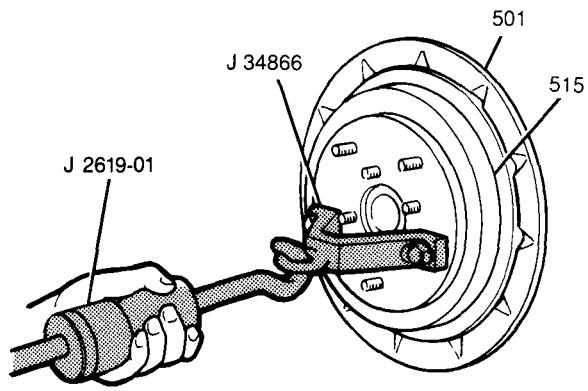

501 BACKING PLATE
515 BRAKE DRUM
PC1403-5C1-EJ-RS

Figure 3 Removing Brake Drum

Measure

Tool Required
J 21177-A Drum-to-Shoe Clearance Gage

- Brake drum inner diameter using a J 21177-A. If inner diameter exceeds maximum specification of 222 mm (8.74-inches), the drum must be replaced (Figure 4).

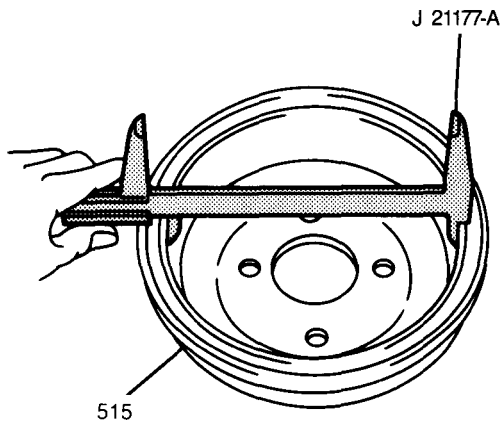

515 BRAKE DRUM
PC1404-5C1-EJ-RS

Figure 4 Measuring Drum Inner Diameter

Install or Connect

- Before installing drum, insert a screwdriver between the parking brake rod and ratchet and push down on ratchet, maximizing brake shoe-to-drum clearance (Figure 5).

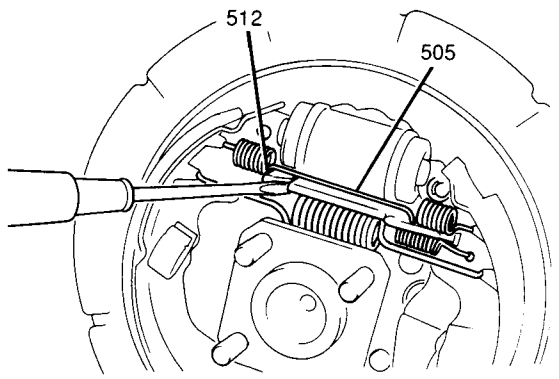

505 BRAKE LEVER
512 RATCHET
PC1405-5C1-EJ-RS

Figure 5 Maximizing Brake Shoe-to-Drum Clearance

1. Brake shoe hold down spring.
2. Brake drum to rear brake assembly; make sure drum is free of dirt and oil.
3. Four brake drum retaining nuts to drum.

Tighten

- Brake drum retaining nuts to 65 N·m (48 lb.ft.).

4. Backing plate plug to backing plate.
5. Rear wheel and tire assembly. Refer to SECTION 3E.

- Lower vehicle.
- Hand tighten parking brake cable locknut.
- Reposition brake lever cover; secure with two screws.
- Depress brake pedal five times to obtain proper drum-to-shoe clearance.

Adjust

- Parking brake. Refer to SECTION 5F.

LININGS

Figures 1 and 6

CAUTION: When servicing brake parts, do not create dust by grinding or sanding brake linings, or by cleaning brake parts with a dry brush or compressed air. Many brake parts contain asbestos fibers which can become airborne if dust is created during servicing. Breathing dust containing asbestos fibers may cause serious bodily harm. A water-dampened cloth or water based solution should be used to remove any dust on brake parts. Equipment is commercially available to perform this washing function. These wet methods will prevent asbestos fibers from becoming airborne.

CAUTION: Keep fingers away from retractor spring to prevent fingers from being pinched between spring and shoe web or spring and backing plate.

Remove or Disconnect

1. Brake drum. Refer to "Drum" earlier in this section.
2. Brake shoe hold down spring, retaining spring and pins by turning pins 45 degrees and sliding springs off pin (Figure 1).
3. Return springs and anti-rattle springs (Figure 1).
4. Brake lever and ratchet, parking brake rod and upper return springs.
5. Brake shoes from vehicle.

Measure

Tool Required:
J 26900-7 Dial Caliper

- Brake shoe lining thickness using a J 26900-7. If thickness of lining is less than 3 mm (0.12-inch), replace the brake shoes (Figure 6). Always replace brake shoes in axle sets.

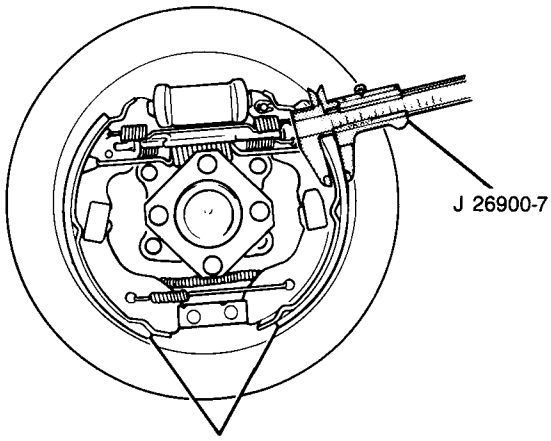

511 BRAKE SHOE
PC1406-5C1-EJ-RS

Figure 6 Measuring Shoe Thickness

Install or Connect

1. Trailing brake shoe to backing plate; secure with hold down spring by inserting hold down pin from rear of backing plate, sliding hold down spring over pin and turning pin 45 degrees.
2. Leading brake shoe to backing plate; secure with retaining spring by inserting hold down pin from rear of backing plate, sliding retaining spring over pin and turning pin 45 degrees.
3. Gently separate brake shoes and insert brake lever and ratchet.
3. Parking brake rod, upper return springs, and ratchet to brake shoe assembly.
4. Return springs and anti-rattle springs.
5. Brake drum. Refer to "Drum" earlier in this section.

WHEEL CYLINDER

Figures 1 and 7

CAUTION: Brake fluid may irritate eyes and skin. In case of contact, take the following actions:
- **Eye contact — rinse thoroughly with water.**
- **Skin contact — wash with soap and water.**

Remove or Disconnect

1. Brake shoes. Refer to "Linings" earlier in this section.
2. Brake fluid pipe from back of wheel cylinder by loosening flare nut. Remove bleeder valve cap and install it on the end of brake fluid pipe to prevent leaks or contamination.
3. Two wheel cylinder retaining bolts from rear of backing plate and wheel cylinder from vehicle (Figure 7).

Install or Connect

1. Wheel cylinder to backing plate; secure with two retaining bolts.

Tighten

- Wheel cylinder retaining bolts to 10 N·m (89 lb.in.).

- Remove bleeder valve cap from brake fluid pipe and install on bleeder valve.

2. Brake fluid pipe to back of wheel cylinder; secure with flare nut.

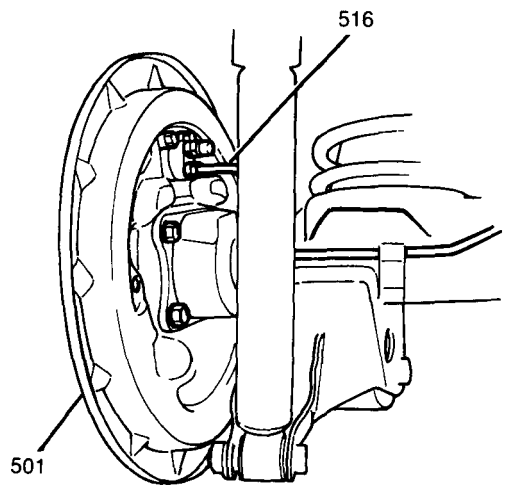

501 BACKING PLATE
516 REAR BRAKE FLUID PIPE
PC1407-5C1-EJ-RS

Figure 7 Wheel Cylinder and Backing Plate

Tighten

- Brake fluid pipe flare nut to 16 N·m (12 lb.ft.).

3. Brake shoes. Refer to "Linings" earlier in this section.

Inspect

- Brake fluid pipe-to-wheel cylinder connection for brake fluid leaks.

- Bleed brake system. Refer to SECTION 5.

BACKING PLATE

Figures 1, 7, 8 and 9

Remove or Disconnect

Tools Required:
J 2619-01 Slide Hammer
J 37781 Adapter

1. Brake shoes. Refer to "Linings" earlier in this section.
2. Brake fluid pipe from back of wheel cylinder by loosening flare nut. Remove bleeder valve cap and install it on the end of brake fluid pipe to prevent leaks or contamination.

3. Two wheel cylinder retaining bolts from rear of backing plate and wheel cylinder from vehicle (Figure 7).
4. Parking brake cable from backing plate.
- Drain rear differential fluid. Refer to SECTION 4B.
5. Wheel bearing retainer nuts from rear axle housing (Figure 7).
6. Rear axle shaft using a J 2619-01 and a J 37781 (Figure 8).

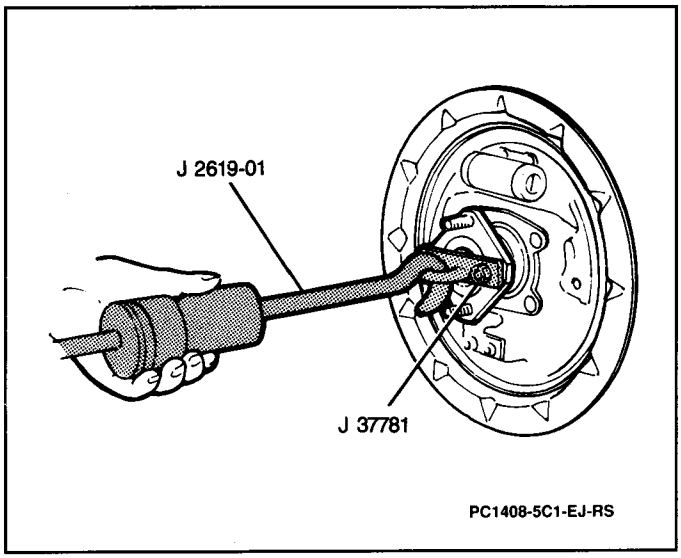

Figure 8 Removing Axle Shaft

7. Four backing plate nuts and backing plate from vehicle.

Install or Connect

- Apply RTV silicone sealant (high resistance) GM P/N 1052366, or equivalent, to axle housing mating surface (Figure 9).

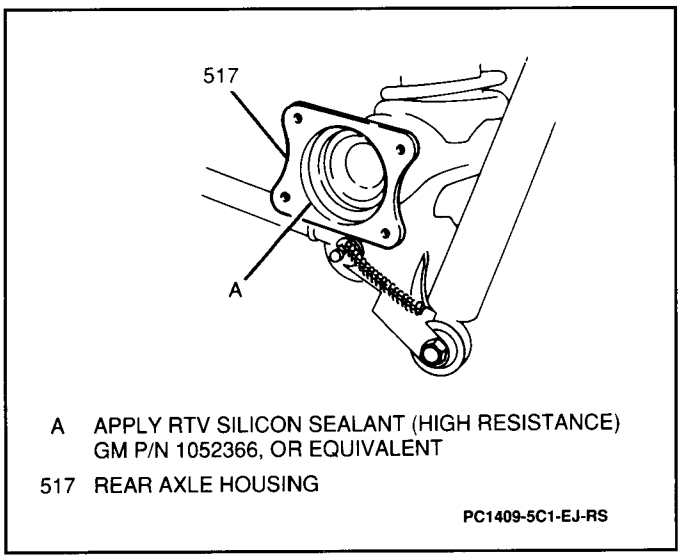

Figure 9 Sealant Application

1. Backing plate to axle housing; secure with four backing plate nuts.

Tighten

- Backing plate nuts to 22 N·m (16 lb.ft.).

2. Rear axle shaft.
3. Wheel bearing retainer nuts to rear axle housing.

Tighten

- Wheel bearing retainer nuts to 23 N·m (17 lb.ft.).

4. Parking brake cable to backing plate.
5. Wheel cylinder to backing plate; secure with two retaining bolts.

Tighten

- Wheel cylinder retaining bolts to 10 N·m (89 ft.in.).

- Remove bleeder valve cap from brake fluid pipe and install on bleeder valve.
6. Brake fluid pipe to back of wheel cylinder; secure with flare nut.

Tighten

- Brake fluid pipe flare nut to 16 N·m (12 lb.ft.).

7. Brake shoes. Refer to "Linings" earlier in this section.

Inspect

- Brake fluid pipe-to-wheel cylinder connection for brake fluid leaks.

- Refill rear differential fluid. Refer to SECTION 4B.
- Bleed brake system. Refer to SECTION 5.

ADJUSTMENT

Although the drum brakes are of the self-adjusting type, some adjustments for proper shoe-to-drum clearance may be required when brake shoes have been replaced or drum has been removed for other service.

Adequate adjustment may be accomplished by pressing the brake pedal 3 to 5 times after all service is completed.

Check rear wheels for dragging. After adjustment is completed, road test the vehicle.

PARKING BRAKE

For parking brake diagnosis, refer to SECTION 5. For parking brake service procedures, refer to SECTION 5F.

UNIT REPAIR

DRUM

Cracked, Scored or Grooved

CAUTION: When servicing brake parts, do not create dust by grinding or sanding brake linings, or by cleaning brake parts with a dry brush or compressed air. Many brake parts contain asbestos fibers which can become airborne if dust is created during servicing. Breathing dust containing asbestos fibers may cause serious bodily harm. A water-dampened cloth or water based solution should be used to remove any dust on brake parts. Equipment is commercially available to perform this washing function. These wet methods will prevent asbestos fibers from becoming airborne.

A cracked drum is unsafe for further service and must be replaced. Never attempt to weld a cracked drum.

Smooth any slight scores. Heavy or extensive scoring will cause excessive brake lining wear and it may be necessary to refinish the drum's braking surface.

For refinishing procedures, refer to "Refinishing" later in this section.

Out-of-Round or Tapered

A drum that is found to be out-of-round or tapered can be refinished to correct the problem if it is not too severe. Refer to "Refinishing" later in this section.

Refinishing

If a drum must be refinished, remove only enough metal to obtain a true, smooth braking surface. If a drum does not clean up when refinished to a maximum inside diameter of 222 mm (8.74-inches), it must be replaced. Removal of more metal will affect heat dissipation and may cause drum distortion.

When refinishing drums, always use sharp cutting tools or bits. Dull or worn tools leave a poor surface finish which will affect braking performance. Vibration dampening attachments should always be used when refinishing braking surfaces. These attachments eliminate tool chatter and will result in better surface finish.

The optimum spindle speed for refinishing braking surfaces is spindle 200 rpm. Crossfeed for rough cutting should range from 0.25 to 0.15 mm (0.010 to 0.006-inch) per revolution. Finish cuts should be made at crossfeeds no greater than 0.05 mm (0.002-inch) per revolution.

After refinishing, replace any drum that exceeds a maximum inside diameter of 222 mm (8.74-inches).

New Replacement Drum Refinishing

Prior to installation of a new replacement drum, the drum should be cleaned by a single finish cut of no greater than 0.05 mm (0.002-inch) per revolution at an optimum spindle speed of 200 rpm.

WHEEL CYLINDER

Figure 10

CAUTION: Brake fluid may irritate eyes and skin. In case of contact, take the following actions:
- **Eye contact — rinse thoroughly with water.**
- **Skin contact — wash with soap and water.**

Disassemble

1. Wheel cylinder boots (Figure 10).

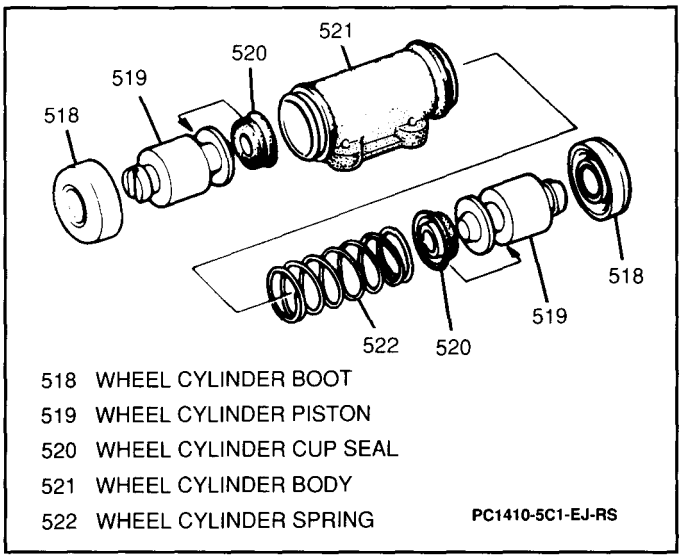

Figure 10 Wheel Cylinder Components

2. Wheel cylinder pistons.
3. Wheel cylinder cup seals.
4. Wheel cylinder spring.
5. Bleeder valve from wheel cylinder body.

Clean

- Wheel cylinder body in clean brake fluid and dry with filtered compressed air.

Inspect

- Wheel cylinder body, piston, cup seals and spring for rust, deterioration, wear, pitting and corrosion. Replace as necessary. Replace all components included in repair kits.

Assemble

1. Bleeder valve to wheel cylinder body.

   #### Tighten

   - Bleeder valve to 8 N·m (71 lb.in.).

2. Wheel cylinder spring to wheel cylinder body.
3. Wheel cylinder cup seals to wheel cylinder body, taking care that lip does not become turned under.
4. Wheel cylinder pistons.
5. Wheel cylinder boots over end of wheel cylinder body. Insure lip of boot sits securely in groove on wheel cylinder body.

SPECIFICATIONS

GENERAL SPECIFICATIONS

Shoe Lining Thickness (Minimum)	3 mm (0.12 in.)
Drum Inside Diameter (Maximum)	222 mm (8.74 in.)
Drum Out-of-Round (Maximum)	0.01 mm (0.0004 in.)
Drum Taper (Maximum)	0.1 mm (0.004 in.)
Drum Runout (Maximum)	0.04 mm (0.0016 in.)

FASTENER TIGHTENING SPECIFICATIONS

Bleeder Valve	8 N·m (71 lb.in.)
Brake Drum Retaining Nuts	65 N·m (48 lb.ft.)
Wheel Cylinder Retaining Bolts	10 N·m (89 lb.in.)
Backing Plate Nuts	22 N·m (16 lb.ft.)
Wheel Bearing Retainer Nuts	23 N·m (17 lb.ft.)
Brake Fluid Pipe Flair Nut	16 N·m (12 lb.ft.)

SERVICE PARTS INFORMATION

Component Name Used in Section 5C1	Reference Name in Service Parts Catalog	Group Number
Backing Plate	Plate, Rear Brake Backing	5.001
Brake Shoes	Shoe Kit, Rear Brake	5.017
Return Spring	Spring, Rear Brake Shoe Return	5.026
Hold Down Pin	Pin, Rear Brake Shoe	5.043
Hold Down Spring	Spring, Rear Brake Shoe Holddown	5.043
Retainer Spring	Spring, Rear Brake Shoe Holddown	5.043
Wheel Cylinder	Cylinder, Rear Wheel	4.665
Wheel Cylinder Boots	Cup Kit, Rear Wheel Cylinder (Includes Boots)	4.667
Wheel Cylinder Pistons	Cup Kit, Rear Wheel Cylinder (Includes Boots)	4.667
Wheel Cylinder Seals	Cup Kit, Rear Wheel Cylinder (Includes Boots)	4.667
Wheel Cylinder Spring	Spring, Rear Wheel Cylinder	4.669
Bleeder Valve	Valve, Rear Brake Bleeder	4.666
Bleeder Valve Cap	Cap, Rear Brake Bleeder Valve	4.666
Brake Lever	Strut, Rear Parking Brake Lever	5.150
Anti-Rattle Springs	Spring, Rear Brake Shoe Anti-Rattle	5.043
Parking Brake Lever	Lever, Rear Park Brake	5.158
Wheel Bearing Retainer	Retainer, Rear Wheel Bearing Outer	5.001

SPECIAL TOOLS

1
J 34866

2
J 26900-7

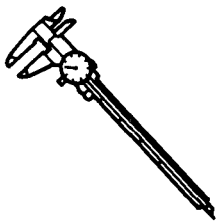

4
J 2619-01

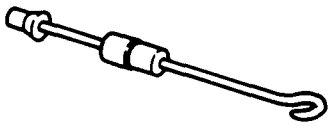

3
J 21177-A

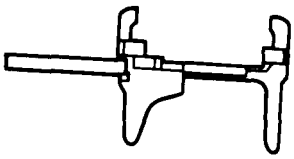

5
J 37781

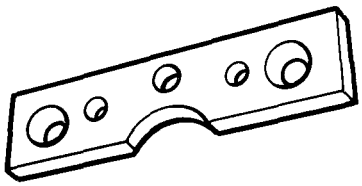

1 BRAKE DRUM REMOVER
2 DIAL CALIPER
3 DRUM-TO-SHOE CLEARANCE GAGE
4 SLIDE HAMMER
5 REAR AXLE REMOVER

PC1411-5C1-EJ-RS

SECTION 5D1

VACUUM BOOSTER SYSTEM

NOTICE: When fasteners are removed, always reinstall them at the same location from which they were removed. If a fastener needs to be replaced, use the correct part number fastener for that application. If the correct part number is not available, a fastener of equal size and strength (or stronger) may be used. Fasteners that are not reused, and those requiring thread-locking compound, will be called out. The correct torque values must be used when installing fasteners that require them. If the above procedures are not followed, parts or system damage could result.

CONTENTS

General Description 5D1-1
Brake Booster Assembly 5D1-1
On-Vehicle Service 5D1-1
Brake Booster Assembly 5D1-1
Check Valve Hose 5D1-2
Brake Booster Adjustment 5D1-3
Unit Repair 5D1-5
Brake Booster 5D1-5
Specifications 5D1-11
Fastener Torques 5D1-11
Service Parts Information 5D1-11
Special Tools 5D1-12

GENERAL DESCRIPTION

BRAKE BOOSTER ASSEMBLY

The booster assembly is located between the master cylinder and the brake pedal. It is designed so the force created when the brake pedal is depressed mechanically increases with the engine vacuum. When the brake pedal is depressed the force is transmitted to the piston of the master cylinder through the valve operating rod, booster air valve, reaction disc and piston rod. The force of the booster piston is developed due to the pressure difference between the front and the rear chambers.

Important

- Replace all components included in repair kits used to service this brake system.
- Lubricate parts as specified.
- If any hydraulic components are removed or disconnected, it may be necessary to bleed all or part of the brake system. Refer to SECTION 5 for brake system bleeding procedures.
- Replace brake shoes and brake pads in axle sets only.
- The torque values specified are for dry, unlubricated fasteners.
- Perform service operations on a clean bench, free from mineral oil materials.

ON-VEHICLE SERVICE

BRAKE BOOSTER ASSEMBLY

Figures 1 and 2

Remove or Disconnect

1. Negative (-) battery cable.
2. Master cylinder. Refer to SECTION 5A.

- Loosen screw on brake booster vacuum hose clamp and remove hose from brake booster (Figure 1).

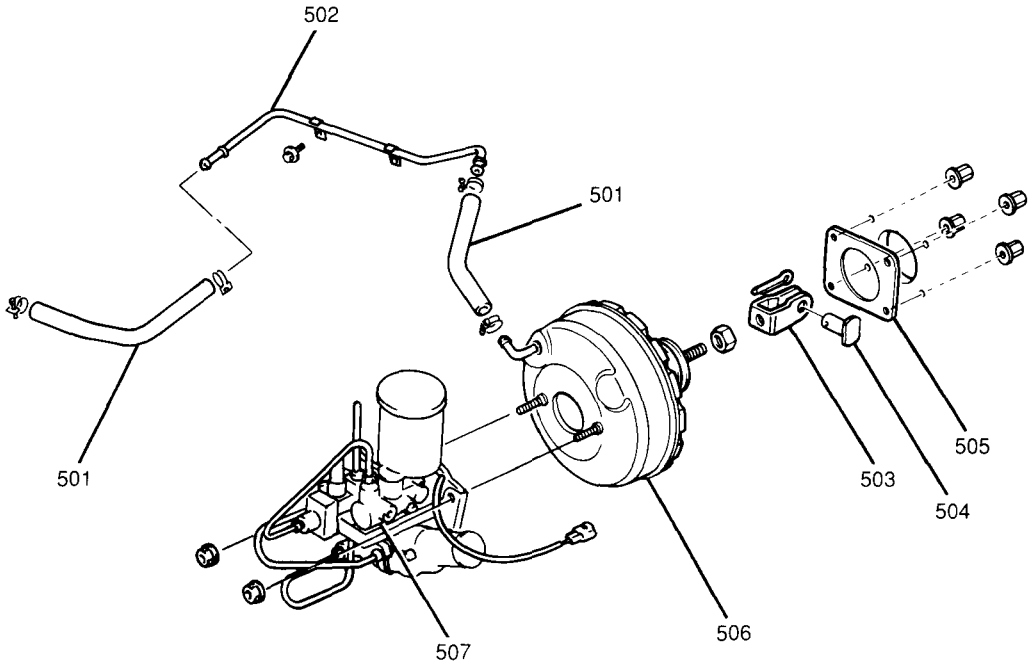

501 BRAKE BOOSTER VACUUM HOSE
502 BRAKE BOOSTER VACUUM PIPE
503 MASTER CYLINDER OPERATING ROD CLEVIS
504 CLEVIS PIN
505 BRAKE BOOSTER BRACKET GASKET
506 BRAKE BOOSTER
507 MASTER CYLINDER

PC5454-5D1-EJ-RS

Figure 1 Brake Booster Vacuum Hoses

3. Cotter pin and clevis pin from master cylinder operating rod clevis and remove clevis from brake pedal (Figure 2).
4. Four mounting nuts and brake booster from bulkhead.

Install or Connect

1. Brake booster to bulkhead; secure with four mounting nuts.

Tighten

- Brake booster mounting nuts to 13 N·m (115 lb.in.).

2. Master cylinder operating rod clevis to brake pedal; secure with clevis pin and cotter pin.
3. Brake booster vacuum hose to brake booster; tighten screw on vacuum hose clamp.
4. Master cylinder. Refer to SECTION 5A.
5. Negative (-) battery cable.

Tighten

- Negative (-) battery cable-to-negative (-) battery terminal retainer to 15 N·m (11 lb.ft.).

CHECK VALVE HOSE

Figure 1

The check valve is located in the brake booster vacuum hose that is connected directly to the brake booster.

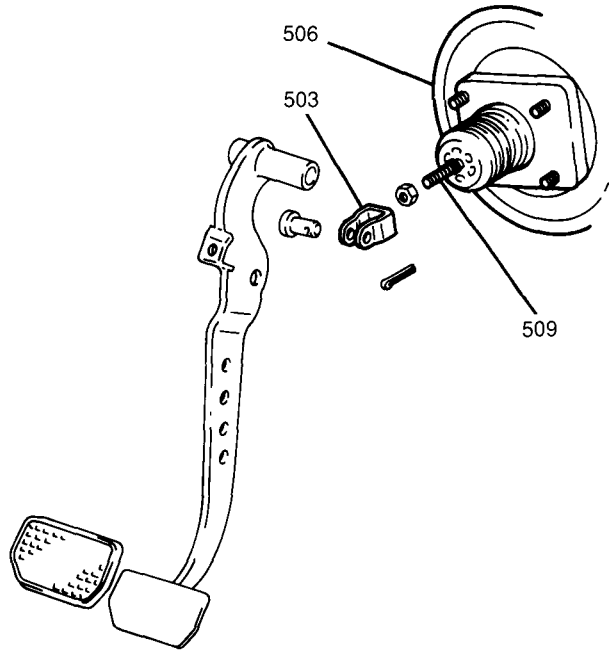

503 MASTER CYLINDER OPERATING ROD CLEVIS
506 BRAKE BOOSTER
509 MASTER CYLINDER OPERATING ROD

PC5455-5D1-EJ-RS

Figure 2 Brake Pedal-to-Master Cylinder Operating Rod Clevis

Remove or Disconnect

- Loosen screw on brake booster vacuum hose clamp at the brake booster and remove hose from brake booster (Figure 1).
- Loosen screw on brake booster vacuum hose clamp at the brake booster vacuum pipe located on the bulkhead and remove hose from vehicle.

Install or Connect

1. Brake booster vacuum hose to the brake booster pipe on the bulkhead; tighten screw on hose clamp.
2. Brake booster vacuum hose to the brake booster; tighten screw on hose clamp.

BRAKE BOOSTER ADJUSTMENT

Figures 3 through 6

Tools Required:
J 39567 Booster Push Rod Gage
J 37767 Booster Push Rod Wrench

The clearance between the master cylinder primary piston and the brake booster piston rod adjusting nut should be 0.0 mm (0.0-inch) (Figure 3).

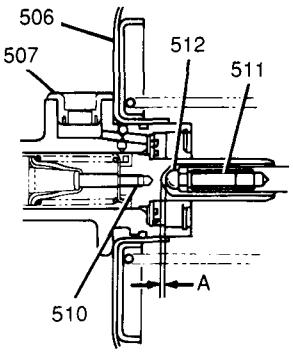

A MASTER CYLINDER PRIMARY PISTON-TO-BRAKE BOOSTER PISTON ROD ADJUSTING NUT = 0.0 mm (0.0")
506 BRAKE BOOSTER
507 MASTER CYLINDER
510 MASTER CYLINDER PRIMARY PISTON
511 BRAKE BOOSTER PISTON ROD
512 BRAKE BOOSTER PISTON ROD ADJUSTING NUT

PC1576-5D1-EJ-RS

Figure 3 Master Cylinder Primary Piston-to-Brake Booster Piston Rod Adjusting Nut

1. Set a J 39567 on the master cylinder. Push the J 39567 pin down until it touches the master cylinder primary piston (Figure 4).

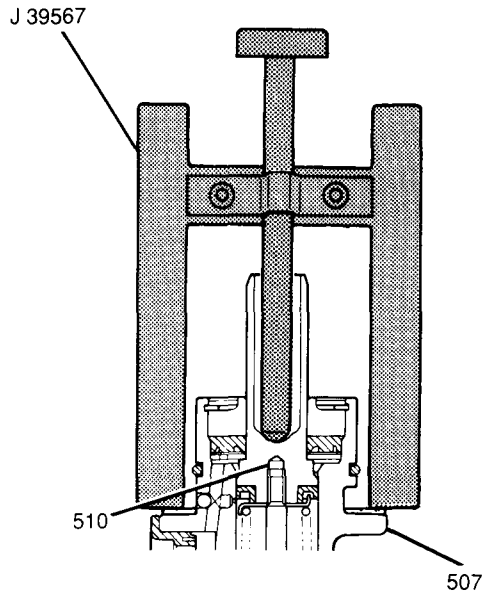

507 MASTER CYLINDER
510 MASTER CYLINDER PRIMARY PISTON

PC5456-5D1-EJ-RS

Figure 4 Installing J 39567 Onto Master Cylinder

2. Remove the J 39567 from the master cylinder, do not alter the position of the pin.
3. Turn the J 39567 upside down and set it on the brake booster (Figure 5).

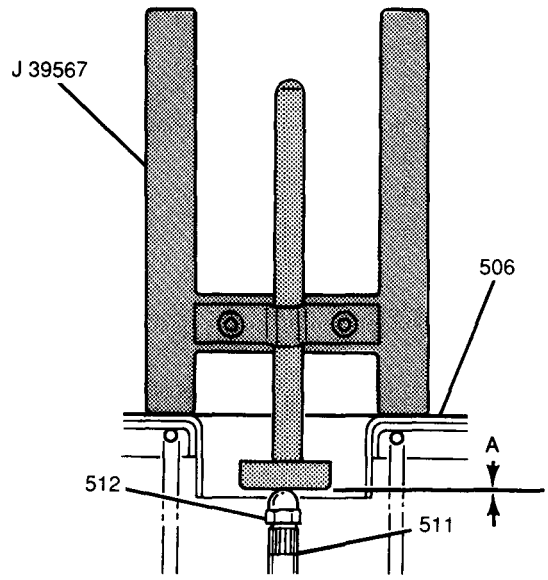

A CLEARANCE BETWEEN J 39567 AND BRAKE BOOSTER PISTON ROD = 0.0 mm (0.0")
506 BRAKE BOOSTER
511 BRAKE BOOSTER PISTON ROD
512 BRAKE BOOSTER PISTON ROD ADJUSTING NUT

PC5457-5D1-EJ-RS

Figure 5 Installing J 39567 Onto Brake Booster

Measure

- The clearance between the brake booster piston rod and the J 39567 (Figure 4). If the clearance is not 0.0 mm (0.0 inch), adjust the brake booster piston rod length.

Adjust

- Brake booster piston rod length. Hold brake booster piston rod in place with the J 37767 (Figure 6). Turn the 7 mm brake booster piston rod adjusting nut until it touches the J 39567 pin head.

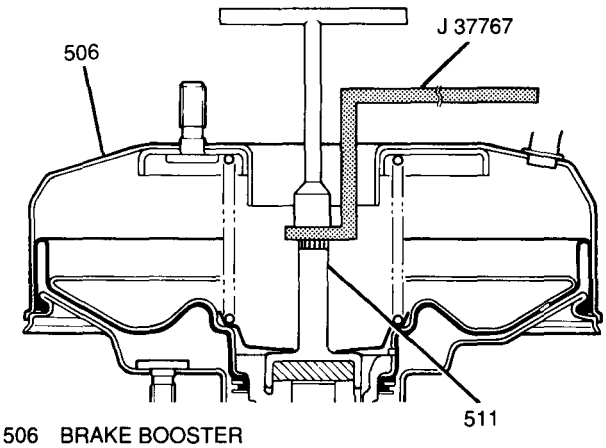

506 BRAKE BOOSTER
511 BRAKE BOOSTER PISTON ROD

PC1580-5D1-EJ-RS

Figure 6 Installing J 37767 Onto Brake Booster Piston Rod

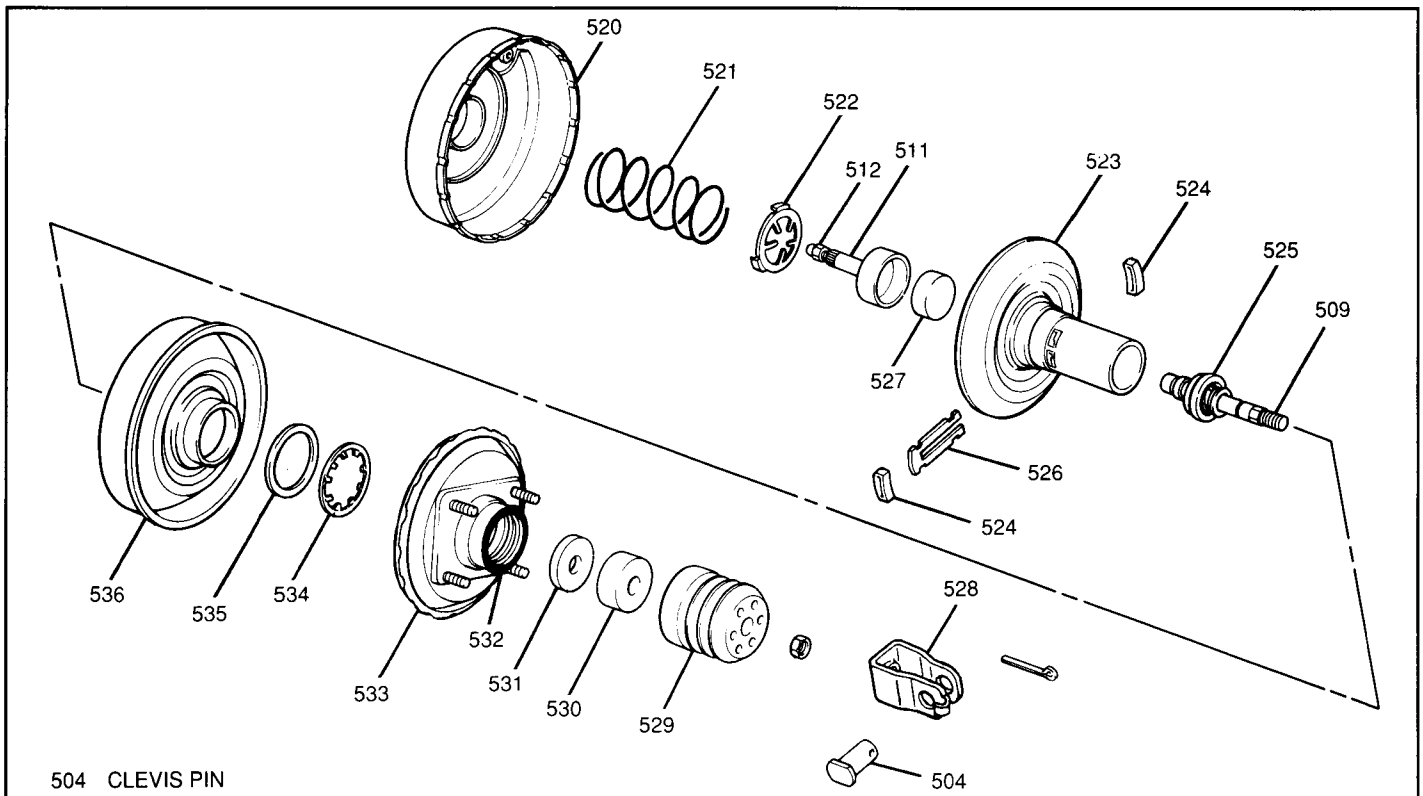

504	CLEVIS PIN	527	REACTION DISC
509	MASTER CYLINDER OPERATING ROD	528	MASTER CYLINDER OPERATING ROD CLEVIS
511	BRAKE BOOSTER PISTON ROD	529	REAR BODY BOOT
512	BRAKE BOOSTER PISTON ROD ADJUSTING NUT	530	FILTER ELEMENT
520	BRAKE BOOSTER FRONT BODY	531	FILTER SEPARATOR
521	BRAKE BOOSTER PISTON RETURN SPRING	532	BRAKE BOOSTER REAR BODY OIL SEAL
522	BRAKE BOOSTER PISTON ROD RETAINER	533	BRAKE BOOSTER REAR BODY
523	BRAKE BOOSTER PISTON	534	DIAPHRAGM STOPPER RING
524	VALVE STOPPER KEY CUSHION	535	DIAPHRAGM RETAINER
525	BRAKE BOOSTER AIR VALVE		
526	VALVE STOPPER KEY	536	DIAPHRAGM

PC8005-5D1-EJ-RS

Figure 7 Brake Booster Assembly

UNIT REPAIR

BRAKE BOOSTER

Figures 7 through 21

Remove or Disconnect

Tools Required:
- J 23456 Power Brake Booster Disassembly and Reassembly Fixture
- J 23456-51A Fixture Adapter
- J 34874 Booster Seal Remover/Installer
- J 7079-2 Non-Threaded Universal Driver Handle
- J 35379 Front Knuckle Support

1. Master cylinder operating rod clevis from master cylinder operating rod by turning counterclockwise.
2. Master cylinder operating rod clevis locknut.

- Mount brake booster into a vise-mounted J 23456 along with a J 23456-51A. Tighten fixture center screw enough to secure booster but not enough to inhibit rotation of the booster (Figure 8).

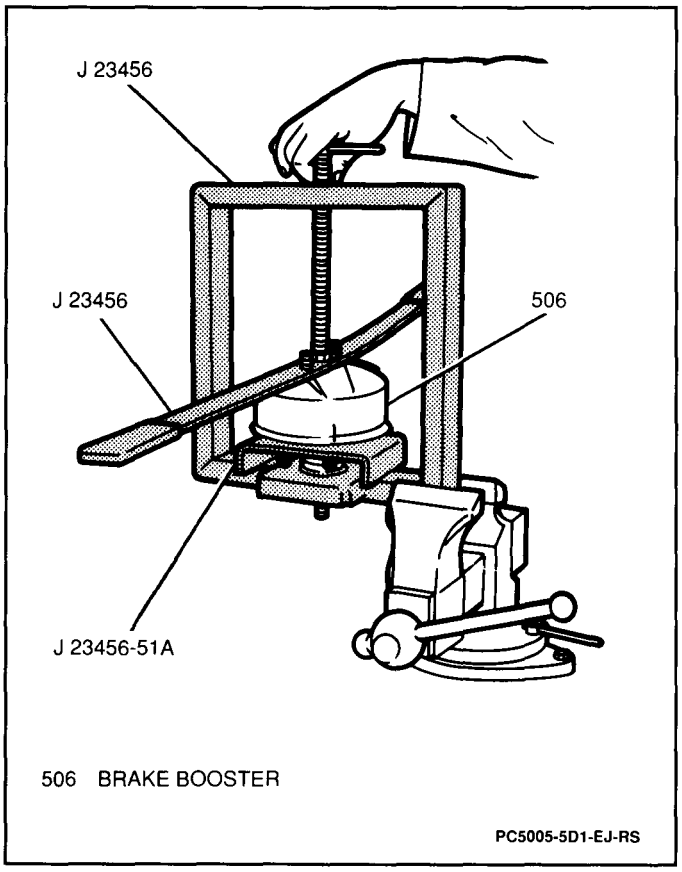

Figure 8 Installing Brake Booster Into J 23456 and J 23456-51A

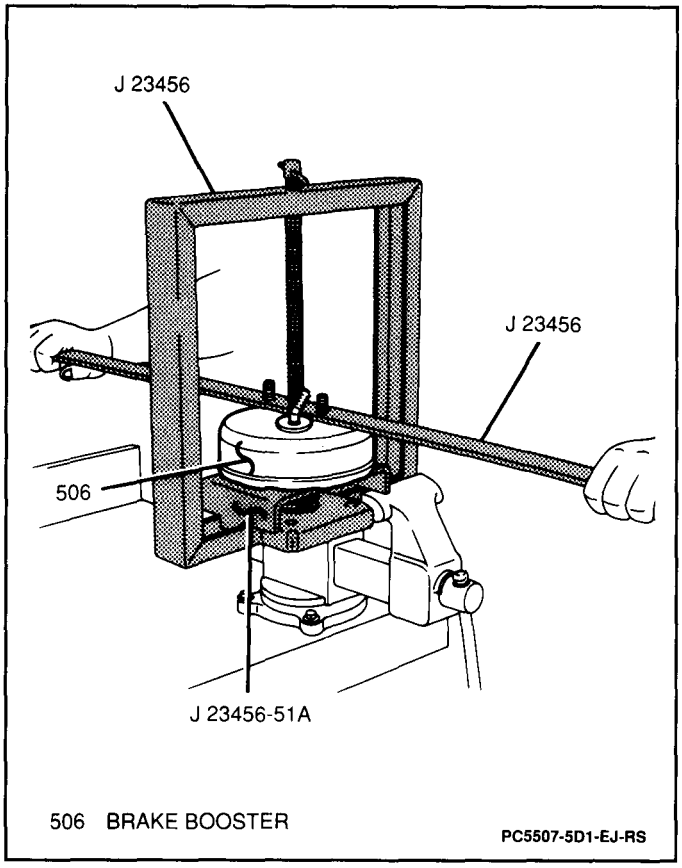

Figure 9 Rotating Brake Booster Front and Rear Bodies for Separation

- Scribe an alignment mark on brake booster front and rear body halves to facilitate reassembly.
- Separate brake booster front and rear body halves.
  A. Using the J 23456 for leverage, rotate the front half of the booster (Figure 9) until all indexing tabs are aligned with indentations on the rear half of the booster (Figure 10).

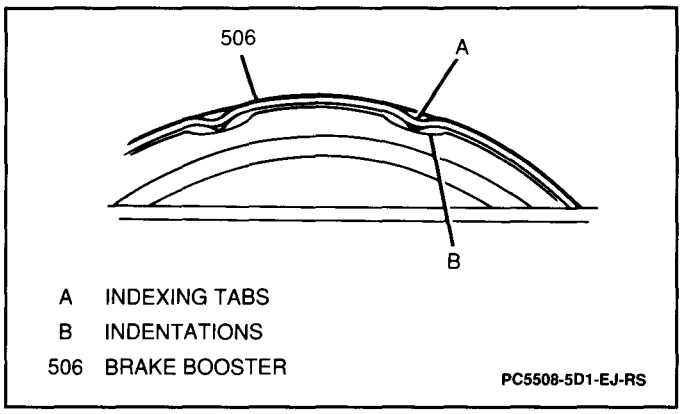

Figure 10 Aligning Indentations With Indexing Tabs

  B. Slowly loosen the J 23456 center screw and separate the booster halves.
  C. Remove the two booster halves from the J 23456 and J 23456-51A.

3. Brake booster piston return spring from brake booster front body.
4. Rear body boot from rear body.
5. Filter element and filter separator from rear body.
6. Brake booster piston from brake booster rear body.
7. Brake booster rear body oil seal from rear body using a J 7079-2, a J 35379 and a J 34874. Drive seal out with a hammer (Figure 11).

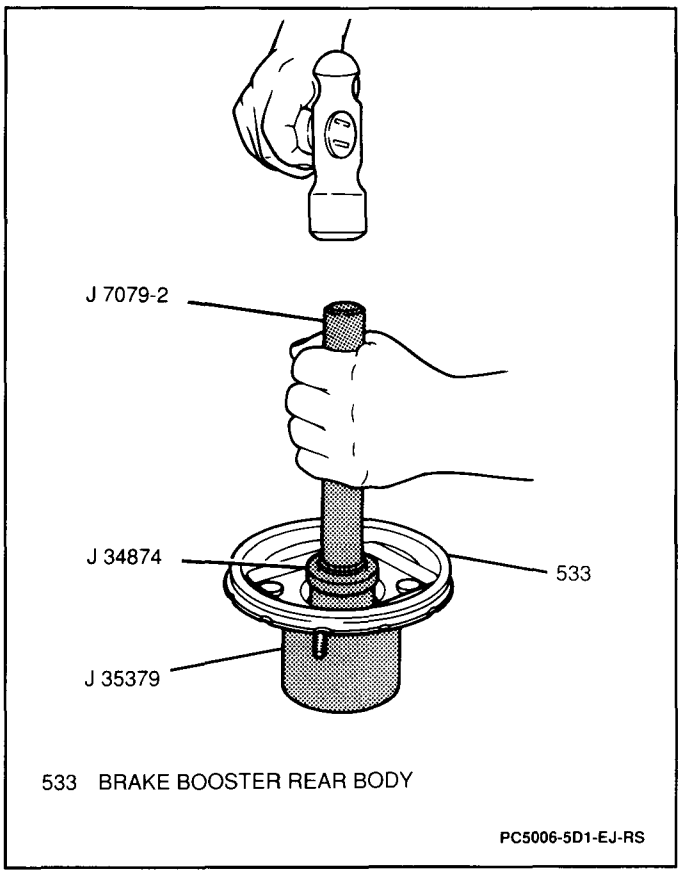

Figure 11 Removing Rear Body Oil Seal

8. Valve stopper key cushions from valve stopper key (Figure 12).

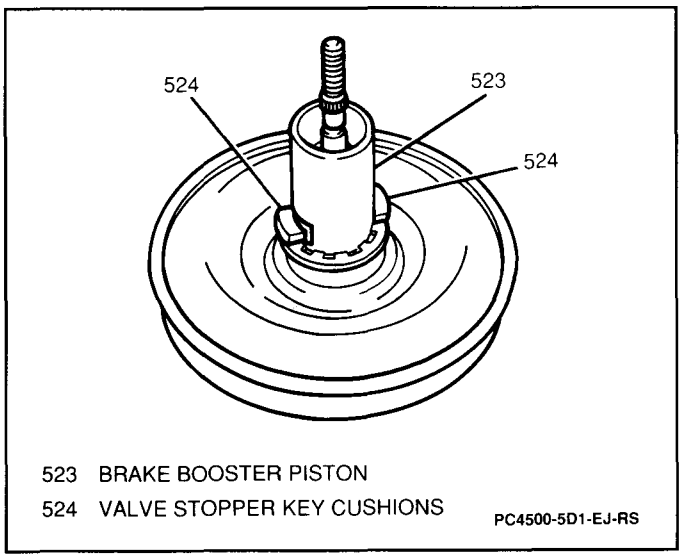

Figure 12 Valve Stopper Key Cushions

9. Valve stopper key from brake booster piston while working air valve assembly in an in-and-out motion (Figure 13).

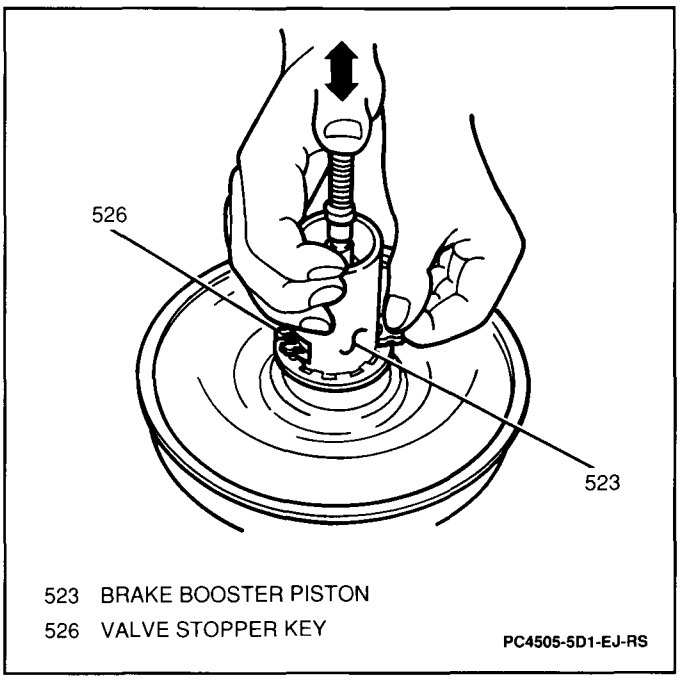

Figure 13 Removing Valve Stopper Key

10. Brake booster air valve from brake booster piston (Figure 14).

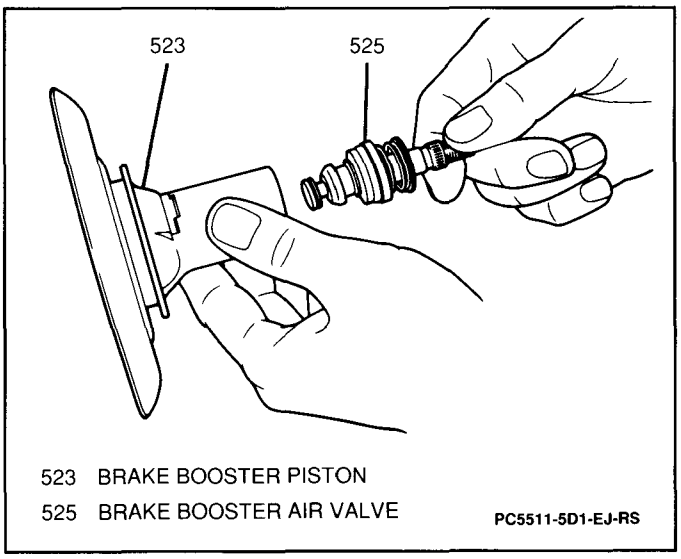

Figure 14 Removing Brake Booster Air Valve From Brake Booster Piston

Important

- Brake booster air valve cannot be disassembled.

11. Diaphragm stopper ring and retainer from brake booster piston (Figure 15).

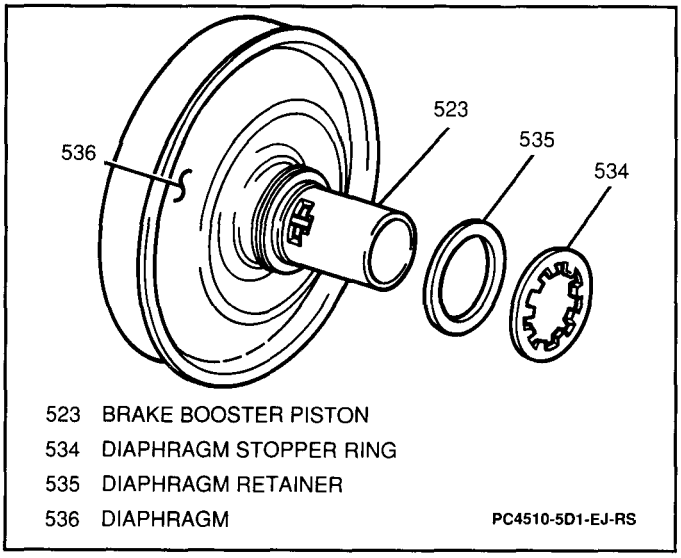

Figure 15 Diaphragm Stopper Ring and Retainer

NOTICE: Do not use a screwdriver or any other tool to remove the diaphragm. Pull it off by hand, carefully removing diaphragm from piston.

12. Diaphragm from brake booster piston (Figure 16).

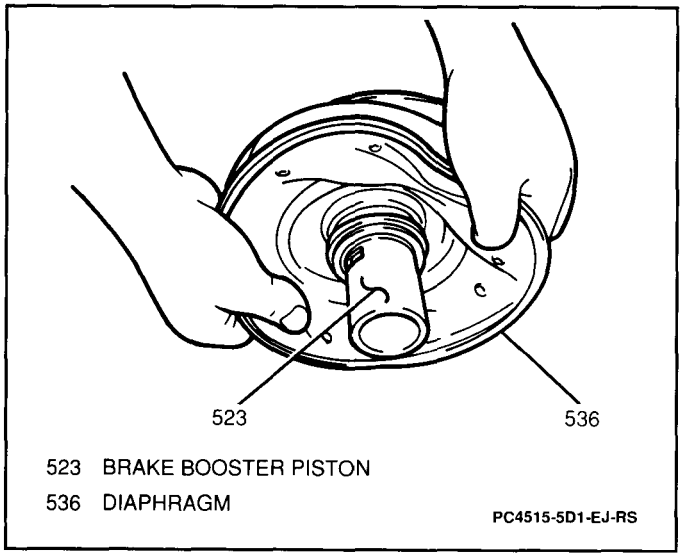

Figure 16 Removing Diaphragm From Brake Booster Piston

13. Brake booster piston rod retainer.
14. Brake booster piston rod from piston.
15. Reaction disc from piston rod.

Inspect

- Brake booster piston for corrosion and/or excessive wear. Replace as necessary.
- Diaphragm for tears, wear, and/or distortion. Replace as necessary.
- Brake booster air valve for cracks or excessive wear. Replace as necessary.
- Master cylinder operating rod for excessive wear or damage. Replace as necessary.

Clean

- All metal parts in ethyl alcohol. Soak metal parts in ethyl alcohol if necessary.
- Wipe rubber diaphragm and plastic parts with a clean cloth. Do not apply alcohol to rubber parts.

Install or Connect

Tools Required:
J 34874 Booster Seal Remover/Installer
J 23456 Power Brake Booster Disassembly and Reassembly Fixture
J 23456-51A Fixture Adapter
J 7079-2 Non-Threaded Universal Driver Handle
J 35379 Front Knuckle Support

- Apply a liberal coat of silicone grease, GM P/N 1052863, or equivalent, to brake booster rear body oil seal, entire surface of the reaction disc, the outside of the air valve seal, and entire surface of the diaphragm prior to installation.

1. Reaction disc to brake booster piston rod.
2. Brake booster piston rod to brake booster piston.
3. Brake booster piston rod retainer.
4. Diaphragm to brake booster piston by hand. Coat entire surface of diaphragm with silicone grease, GM P/N 1052863, or equivalent.

Important

- Make sure that the diaphragm is seated in the piston groove. The diaphragm should rotate smoothly around booster piston if properly seated.

5. Diaphragm stopper ring and retainer to brake booster piston (Figure 17).

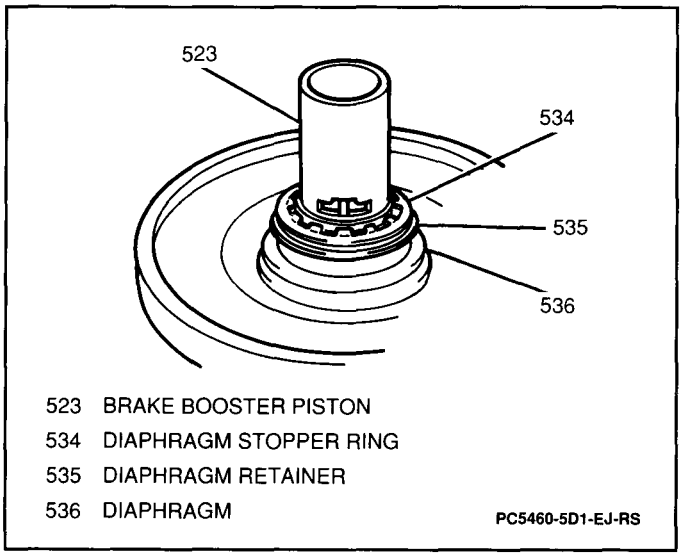

Figure 17 Proper Diaphragm Retainer and Stopper Ring Installation

- Lubricate brake booster air valve with silicone grease, GM P/N 1052863, or equivalent, before installation into brake booster piston (Figure 18).

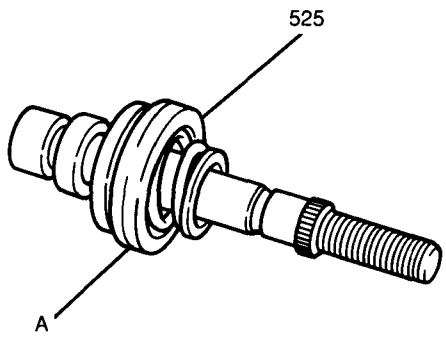

A APPLY SILICONE GREASE HERE
525 BRAKE BOOSTER AIR VALVE
PC5465-5D1-EJ-RS

Figure 18 Applying Silicone Grease to Brake Booster Air Valve

6. Brake booster air valve to brake booster piston.
- Compress brake booster air valve and insert valve stopper key.
7. Valve stopper key cushions to stopper key.
8. A new brake booster rear body oil seal to rear body using a J 34874, a J 7079-2 and a J 35379. Drive oil seal into rear body with a hammer (Figure 19).

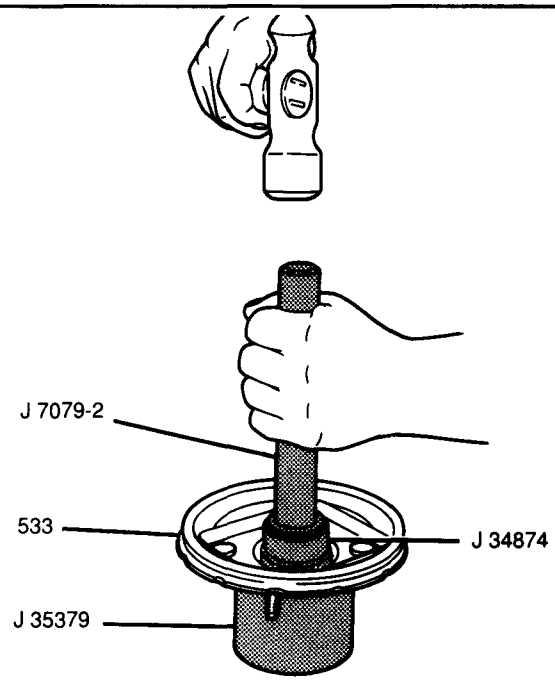

533 BRAKE BOOSTER REAR BODY
PC7005-5D1-EJ-RS

Figure 19 Installing Brake Booster Rear Body Oil Seal

9. Brake booster piston to brake booster rear body.
10. Filter element and filter separator to rear body.
11. Rear body boot to rear body. Boot must be seated securely on rear booster body and air valve.
12. Brake booster piston return spring to brake booster front body.
13. Brake booster rear body to the J 23456, along with a J 23456-51A.
14. Brake booster front body to rear body, aligning piston return spring (Figure 20).

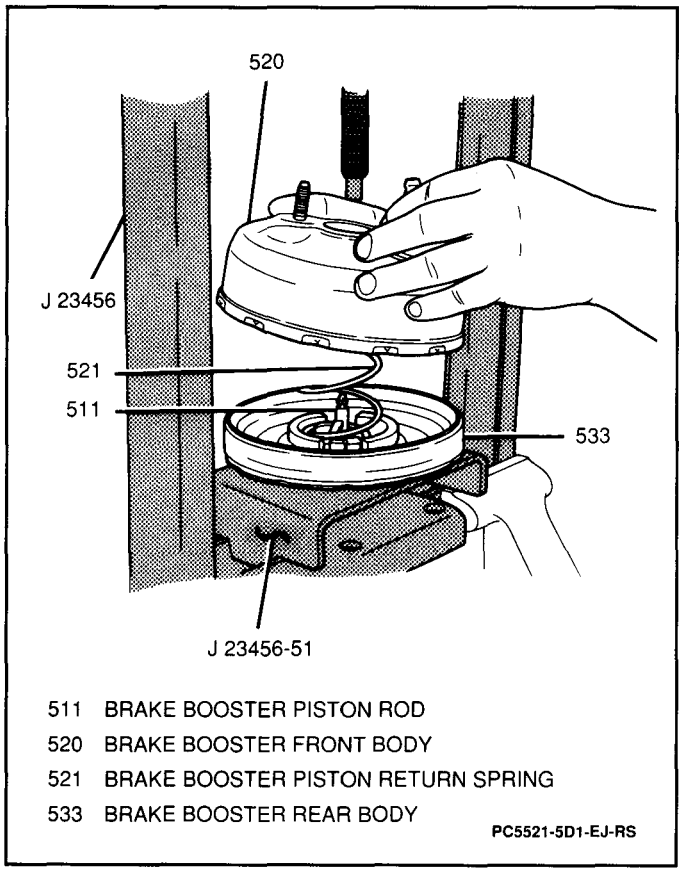

Figure 20 Installing Brake Booster Front Body to Rear Body

- Tighten the center screw of the J 23456, bringing the two booster halves together.
- Make sure that the booster halves have mated squarely, so that front half indexing tabs line up with the rear half indentations.
- Rotate the front half of the booster using the bar of the J 23456, until the indexing tabs catch under the lip of the rear body. Align matchmarks made prior to booster bodies.
- Remove the booster assembly from the J 23456 and J 23456-51A.

15. Master cylinder operating rod clevis locknut to operating rod.
16. Master cylinder operating rod clevis to master cylinder operating rod by rotating clockwise onto rod. The distance between the brake booster bracket gasket and the center of the master cylinder operating rod clevis hole must be less than 125.5 mm (4.94 inches) (Figure 21). Rotate clevis either clockwise or counterclockwise until the desired distance is obtained. Secure clevis in place with locknut.

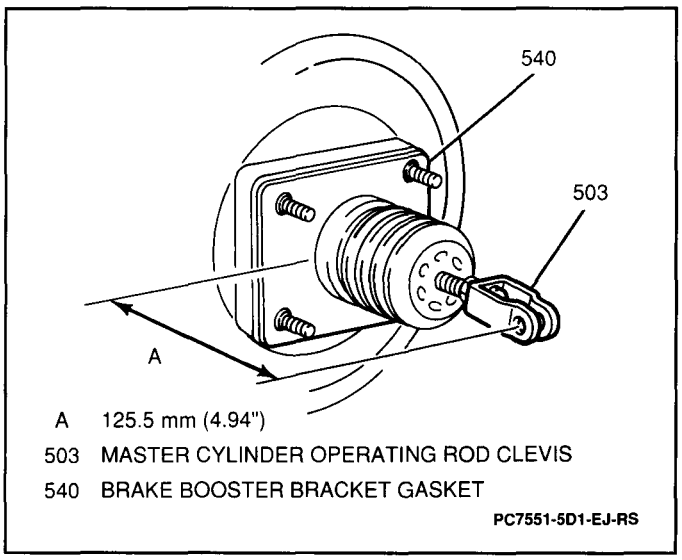

Figure 21 Master Cylinder Operating Rod Clevis-to-Brake Booster Bracket Gasket Clearance

Tighten

- Master cylinder operating rod clevis locknut to 25 N·m (18 lb.ft.).

Adjust

- Brake booster piston rod. Refer to "Brake Booster Adjustment" earlier in this section.

SPECIFICATIONS

FASTENER TORQUES

Brake Booster Mounting Nuts	13 N·m (115 lb.in.)
Master Cylinder Operating Rod Clevis Locknut	25 N·m (18 lb.ft.)
Negative (-) Battery Cable-to-Negative (-) Battery Terminal Retainer	15 N·m (11 lb.ft.)

SERVICE PARTS INFORMATION

Component Name Used in Section 5D1	Reference Name in Service Parts Catalog	Group Number
Brake Booster	Booster, P/B	4.901
Brake Booster Piston Return Spring	Spring, P/B Boos Pwr Pstn	4.924
Brake Booster Piston Rod	Rod, P/B Boos Pstn	4.924
Brake Booster Piston	Piston, P/S Boos Pwr	4.922
Brake Booster Rear Body Oil Seal	Seal, P/B Boos	4.845
Brake Booster Vacuum Hose	Hose, P/B Boos Pipe	4.931
Brake Booster Vacuum Pipe	Pipe, M/Cyl Vac	4.930
Clevis Pin	Pin, M/Cyl Clevis	4.648
Master Cylinder Operating Rod Clevis	Clevis, P/B Boos Yoke	4.898
Rear Body Boot	Boot, P/B Boos Rr Hsg	4.906
Valve Stopper Key	Key, Vac Brk Boos Vlv	4.955

SPECIAL TOOLS

1
J 23456

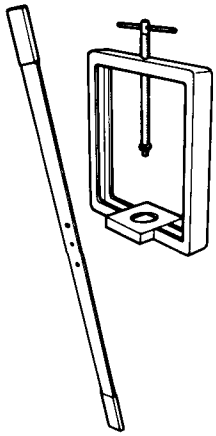

2
J 23456-51A

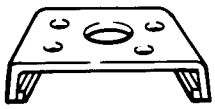

3
J 37767

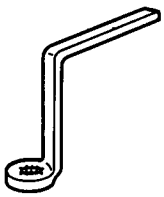

4
J 39567

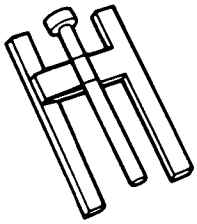

5
J 35379

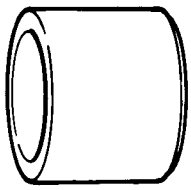

6
J 7079-2

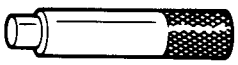

7
J 34874

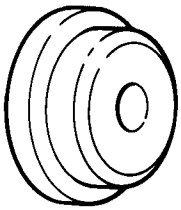

1 POWER BRAKE BOOSTER DISASSEMBLY AND REASSEMBLY FIXTURE
2 FIXTURE ADAPTER
3 BOOSTER PUSH ROD WRENCH
4 BOOSTER PISTON ROD GAGE
5 FRONT KNUCKLE SUPPORT
6 NON-THREADED UNIVERSAL DRIVER HANDLE
7 BOOSTER SEAL REMOVER & INSTALLER

NC0060-5D2-JT-RS

SECTION 5E

REAR WHEEL ANTILOCK (RWAL) BRAKE SYSTEM

CAUTION: Certain components in the Rear Wheel Antilock (RWAL) Brake System are not intended to be serviced individually. Attempting to remove or disconnect certain system components, such as the isolation or dump valves, may result in personal injury and/or improper system operation. Only those components with approved removal and installation procedures in Sections 5, 5E and 5E3 should be serviced.

NOTICE: Do not use a fast charger for engine starting or for battery charging while the battery is connected to the vehicle's electrical system. If a fast charger is used in this manner, RWAL related fuses could blow and serious damage could be caused to many of the vehicle's electrical components. Always disconnect the battery negative (-) cable before charging a battery.

NOTICE: When fasteners are removed, always reinstall them at the same location from which they were removed. If a fastener needs to be replaced, use the correct part number fastener for that application. If the correct part number fastener is not available, a fastener of equal size and strength (or stronger) may be used. Fasteners that are not reused, and those requiring thread-locking compound, will be called out. The correct torque values must be used when installing fasteners that require them. If the above procedures are not followed, parts or system damage could result.

CONTENTS

General Description 5E-1
Normal and Antilock Braking 5E-1
Warning System Operation 5E-2
"BRAKE" Warning Lamp 5E-2
System Components 5E-2
Electronic Brake Control Module (EBCM) 5E-2
Rear Wheel Speed Sensor 5E-2
Pressure Limiting Valve 5E-2
Rear Wheel Speed Control 5E-5
Diagnosis 5E-7
On-Vehicle Service 5E-8
General Service Precautions 5E-8
Electronic Brake Control Module (EBCM) ... 5E-9
Rear Wheel Speed Sensor 5E-9
4WD Switch 5E-10
RWAL Relay. 5E-11
Pressure Limiting Valve 5E-12
Specifications 5E-12
Fastener Torques 5E-12
Special Tools 5E-13

GENERAL DESCRIPTION

The purpose of the Rear Wheel Antilock (RWAL) Brake System is to minimize rear wheel lockup during heavy braking on most road surfaces and conditions. The RWAL Brake System performs this function by monitoring the speed of the rear axle and controlling the brake fluid pressure to both rear wheels during a braking maneuver. This allows the driver to retain directional stability and better steering capability.

NOTICE: Do not use lubricated compressed air on brake parts. Lubricated compressed air can damage rubber brake system components.

Important

- Replace all components provided in repair kits used to service this system.
- Lubricate rubber parts with clean brake fluid to make assembly easier.
- If any hydraulic component is removed or disconnected, it may be necessary to bleed all or part of the brake system. The torque values specified are for dry, unlubricated fasteners.
- Perform service operations on a clean bench, free from all mineral oil materials.
- Use of tire sizes other than those recommended may result in a reduction in the optimal performance of the RWAL Brake System.

NORMAL AND ANTILOCK BRAKING

Under normal conditions, the RWAL Brake System functions much like a conventional brake system.

If rear wheel locking tendency is noted during a brake application, the RWAL Brake System will enter antilock mode. During antilock braking, hydraulic pressure in the rear wheel circuit is modulated by a pressure limiting valve to prevent the rear wheels from locking. The pressure limiting valve is located under the master cylinder and actually consists of two separate valves. One is a dump valve, which releases pressure into an accumulator. The other is an isolation valve, which maintains rear wheel brake pressure.

During antilock braking, a series of rapid pulsations will be felt in the pedal caused by the rapid changes in position of the pressure limiting valve. This pedal pulsation is present during antilock braking and will stop when normal braking is resumed or when the vehicle comes to a stop. During antilock braking on dry pavement, the rear tires may make "chirping" noises as they approach lockup. These noises and pedal pulsations should be considered normal during antilock operation.

Vehicles equipped with RWAL Brake Systems may be stopped by applying normal force to the brake pedal. Pedal operation during normal braking should be no different than previous vacuum-boost systems. When the antilock mode is in effect, the brake pedal may rise slightly while the brakes are being applied. This condition should also be considered normal. Maintaining a constant force on the pedal will provide the shortest stopping distance.

WARNING SYSTEM OPERATION

The brake system continuously monitors all of its components and uses several methods of determining if a fault exists. Should a fault be detected, the RWAL Brake System notifies the driver of a system malfunction.

When the vehicle is started, a functional check of the RWAL Brake System is performed. Self-check functional tests are also performed during normal driving conditions once the vehicle is moving.

When any fault is detected, antilock functions are stopped and the "BRAKE" lamp is lit to notify the driver of a problem in the braking system. "BRAKE" warning lamp operation is described below.

"BRAKE" Warning Lamp

The "BRAKE" warning lamp in the instrument panel cluster will illuminate to warn the driver of conditions in the brake system which may result in reduced braking capability. It will also illuminate when the parking brake is applied or not fully released. Conditions which turn on the "BRAKE" warning lamp include the following:

1. Parking brake not fully released. If the parking brake is applied or not fully released, the switch on the parking brake lever assembly will ground the "BRAKE" warning lamp circuit and cause the light to turn on.
2. Low brake fluid level. If the brake fluid level drops in the reservoir, the brake fluid level switch will ground the "BRAKE" warning lamp circuit and cause the light to turn on.
3. Instrument panel bulb check. When the ignition switch is turned to BULB TEST, the "BRAKE" warning lamp circuit is grounded and the light turns on. The light should go out when the ignition switch is released to "ON."

Important

- Illumination of the "BRAKE" warning lamp may indicate reduced braking ability.
- If the "BRAKE" warning lamp lights and the brake fluid level is normal, refer to SECTION 5E3.

SYSTEM COMPONENTS

Figures 1 through 9

Electronic Brake Control Module (EBCM)

The Electronic Brake Control Module (EBCM) is a small control computer, mounted behind the left side of the instrument panel near the fuse block. The EBCM monitors the speed of the rear axle and the electrical status of the pressure limiting valve. The primary functions of the EBCM are to detect wheel locking tendencies, control the brake system while in antilock mode and monitor the system for normal electrical operation. The EBCM also emits diagnostic trouble codes (DTCs) while in the diagnostic mode.

The EBCM continuously checks the speed of the rear axle to determine if the rear wheels are beginning to lock. If a wheel locking tendency is detected, the EBCM commands the pressure limiting valve to modulate the rear hydraulic circuit to prevent wheel lockup and provide optimum braking performance. The EBCM continues to control pressure until a locking tendency is no longer detected.

The RWAL Brake System is electronically monitored by the EBCM for proper operation. If an error is detected anywhere in the system, the EBCM will light the "BRAKE" warning lamp in the instrument cluster. For further information regarding RWAL self-diagnostic capabilities and EBCM DTCs, refer to SECTION 5E3.

Rear Wheel Speed Sensor

The rear wheel speed sensor is mounted to the rear differential carrier. The sensor transmits rear wheel speed information to the EBCM by means of a low-amperage AC voltage signal. This voltage signal is generated through magnetic induction and is caused by passing a toothed exciter ring past the stationary magnetic coil of the rear wheel speed sensor. The AC voltage signal is then transmitted to the EBCM through two wires from the rear wheel speed sensor. Voltage signals to the EBCM increase in both frequency and amplitude as rear wheel speed increases (Figure 4).

Pressure Limiting Valve

The pressure limiting valve is mounted under the brake master cylinder and is connected in the brake hydraulic circuit between the proportioning/differential valve and the rear brake circuit (Figure 5).

The main components of the pressure limiting valve are an isolation valve, a dump valve, an accumulator and a reset switch. During normal (non-antilock) braking operation, the isolation valve is open to allow hydraulic pressure to be applied to the rear wheels. Under heavy (antilock) braking applications, the isolation valve functions in unison with the dump valve and accumulator to maintain, decrease or increase the hydraulic pressure applied to the rear wheels in response to signals from the EBCM (Figure 6).

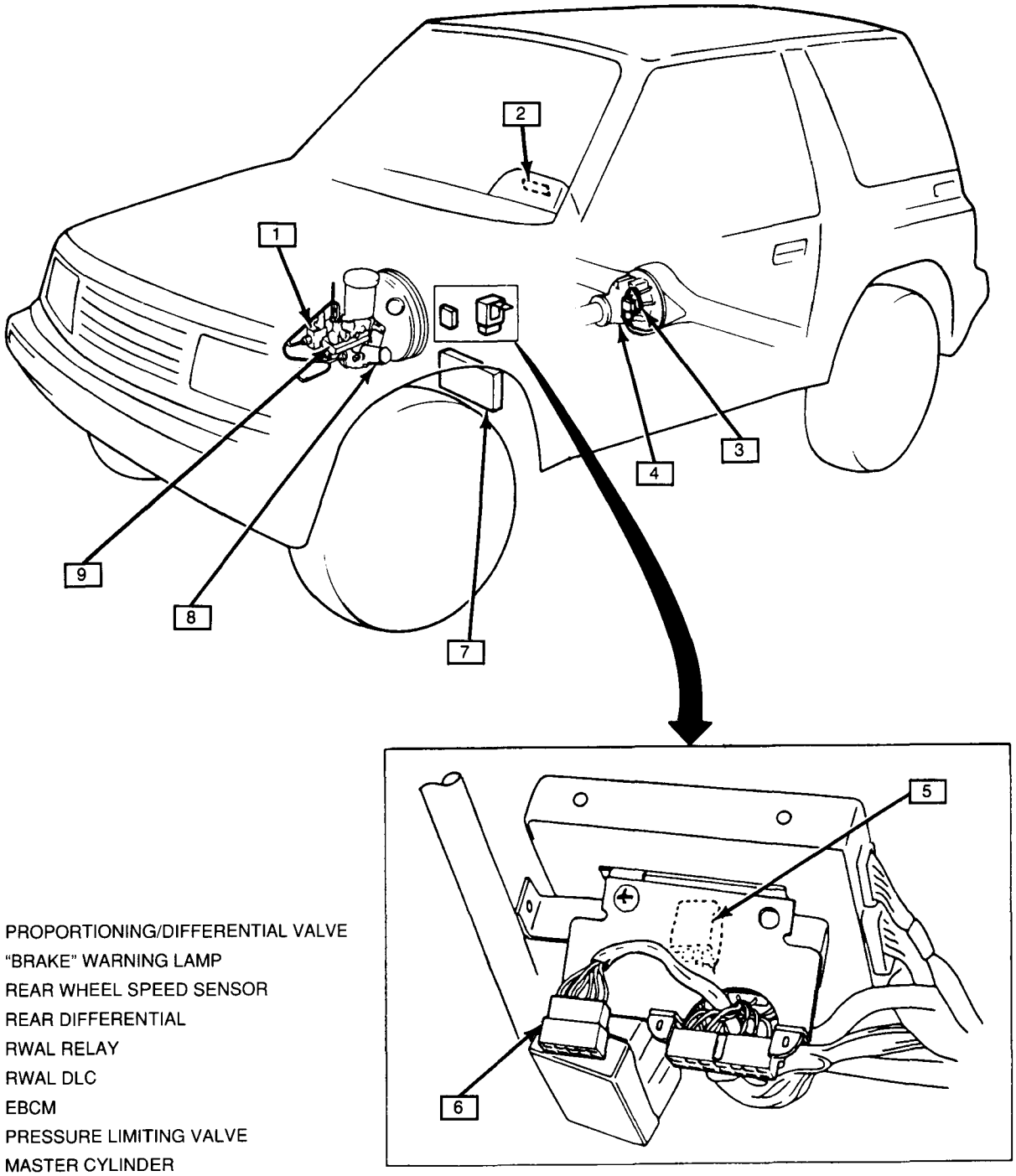

1 PROPORTIONING/DIFFERENTIAL VALVE
2 "BRAKE" WARNING LAMP
3 REAR WHEEL SPEED SENSOR
4 REAR DIFFERENTIAL
5 RWAL RELAY
6 RWAL DLC
7 EBCM
8 PRESSURE LIMITING VALVE
9 MASTER CYLINDER

PC0001-5E-EJ-RS

Figure 1 RWAL Brake System Component Locations

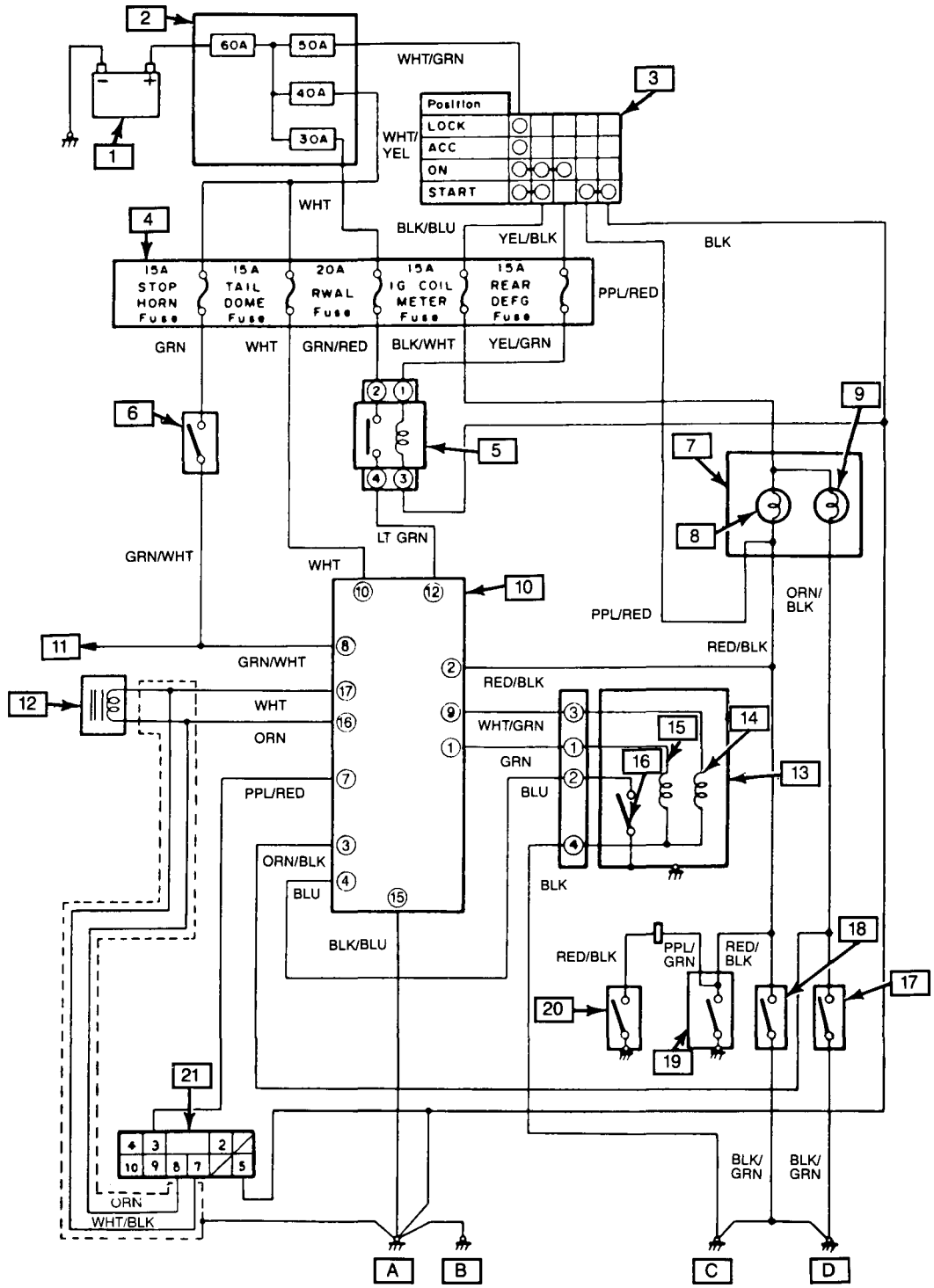

A	LEFT "A" PILLAR GROUND POINT	6	STOPLAMP SWITCH	15	ISOLATION VALVE SOLENOID
B	RIGHT "A" PILLAR GROUND POINT	7	INSTRUMENT CLUSTER	16	RESET SWITCH
C	IGNITION COIL GROUND POINT	8	"BRAKE" WARNING LAMP	17	4WD SWITCH
D	DISTRIBUTOR CASE GROUND POINT	9	4WD LAMP	18	BRAKE FLUID LEVEL SWITCH
1	BATTERY	10	EBCM	19	DIFFERENTIAL SWITCH
2	FUSIBLE LINK BOX	11	TO STOPLAMPS	20	PARKING BRAKE SWITCH
3	IGNITION SWITCH	12	REAR WHEEL SPEED SENSOR	21	RWAL DLC
4	FUSE BLOCK	13	PRESSURE LIMITING VALVE		
5	RWAL RELAY	14	DUMP VALVE SOLENOID		

PC9999-5E-EJ-RS

Figure 2 RWAL System Schematic

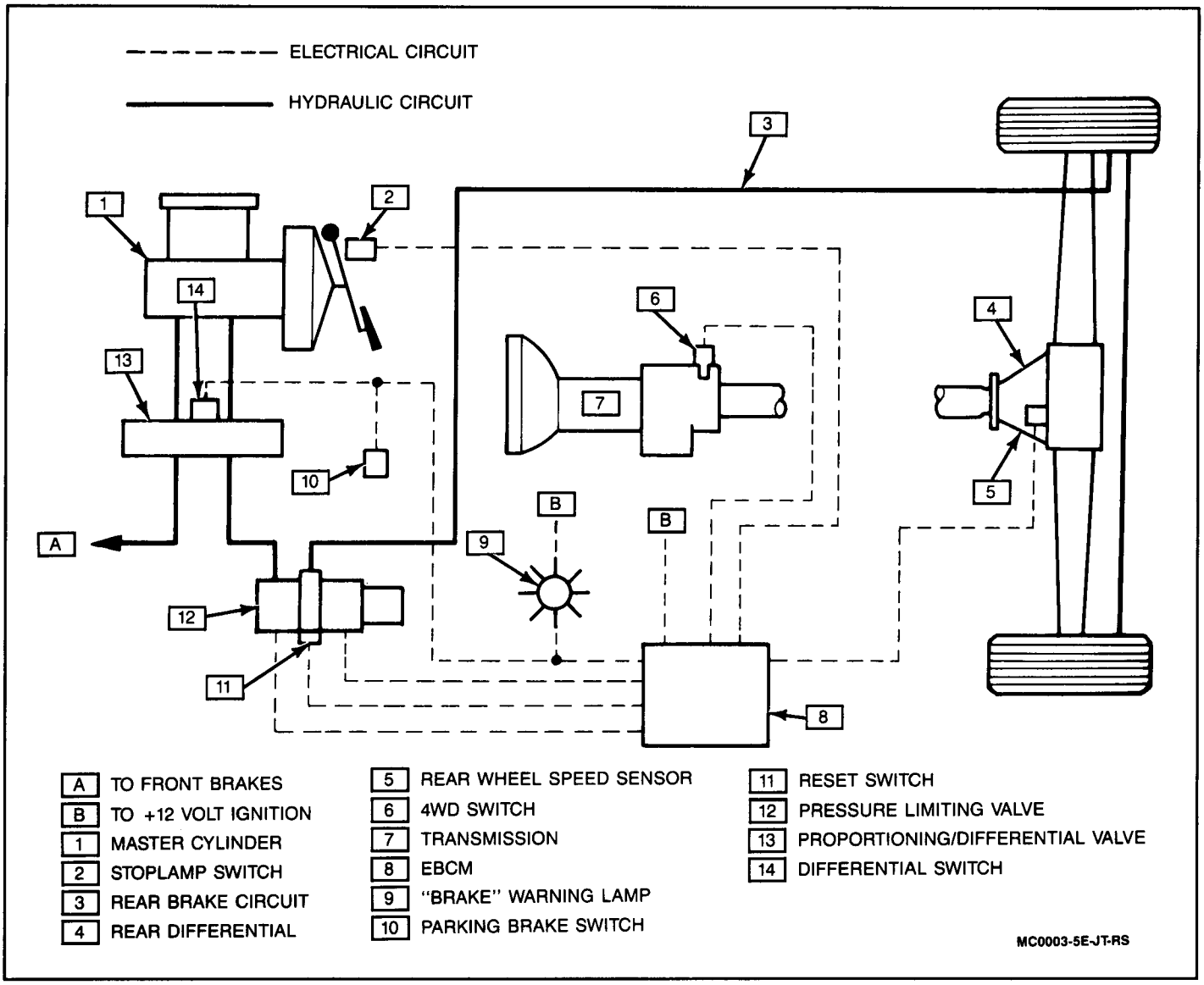

Figure 3 RWAL Brake System Components

During antilock brake application, when wheel and vehicle speed conditions dictate that hydraulic pressure to the rear wheels remains constant, the EBCM applies voltage to the isolation valve. The isolation valve is normally open and only closes when the EBCM applies voltage. The dump valve, however, is a normally closed valve. During conditions under which constant hydraulic pressure is desired, the EBCM only applies voltage to the isolation valve, which closes both the isolation and dump valves. With both valves closed, brake fluid volume (and therefore pressure) in the rear brake circuit remains constant (Figure 7).

If wheel and vehicle speed conditions dictate that a decrease in pressure is required, the EBCM applies a voltage pulse to the dump valve. The dump valve, upon receiving voltage, opens and allows brake fluid to be released into the accumulator. When brake fluid is released, the brake fluid volume (and therefore pressure) in the rear brake circuit is reduced (Figure 8).

If wheel and vehicle speed conditions dictate that an increase in pressure is required, the EBCM stops applying voltage to the isolation valve and the dump valve. Under these conditions, the isolation valve is open, allowing brake fluid to flow from the master cylinder to the rear wheels, and the dump valve is closed, not allowing any fluid to be released into the accumulator. This action causes more fluid to enter the rear brake circuit and increase pressure proportionally (Figure 9).

REAR WHEEL SPEED CONTROL

Figure 10

The EBCM, by monitoring the frequency of the AC voltage signal from the rear wheel speed sensor, determines the speed and deceleration rate of the rear wheels during all braking conditions. For any given wheel speed, an optimum deceleration rate has been programmed into the EBCM which will stop the vehicle quickly and safely. This deceleration rate can be viewed as a line depicting rear wheel speed versus time (Figure 10).

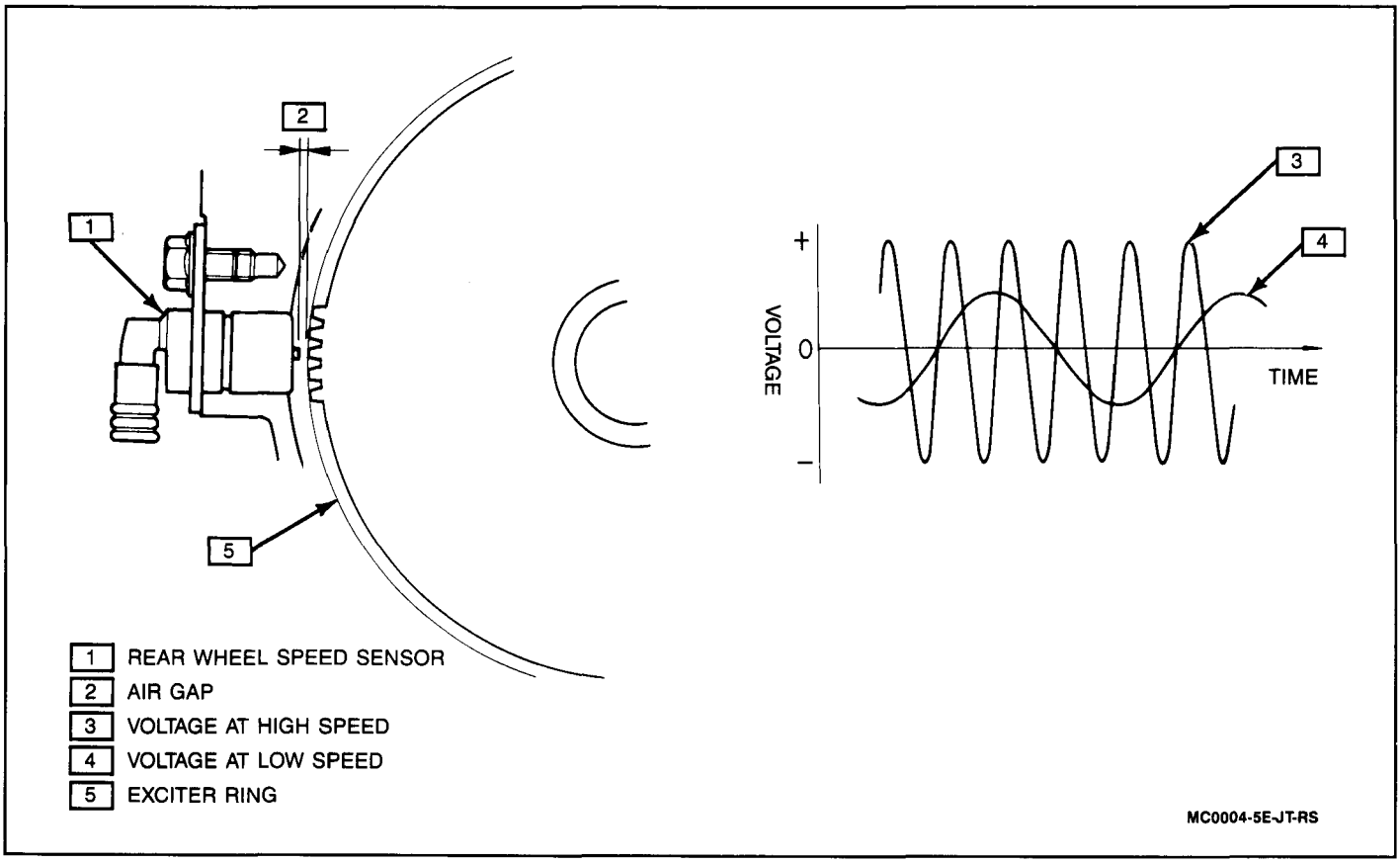

Figure 4 Rear Wheel Speed Sensor Operation

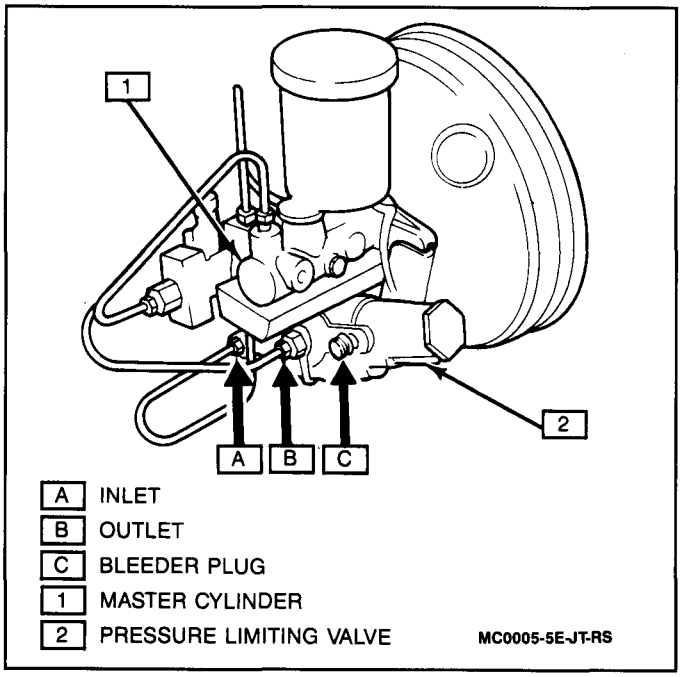

Figure 5 Pressure Limiting Valve

When the difference between the optimum rear wheel speed (programmed) and the true rear wheel speed (from the rear wheel speed sensor) reaches the first programmed set value (point A in Figure 10), the EBCM applies voltage to the isolation valve in the pressure limiting valve. This action closes the isolation valve and maintains a constant hydraulic pressure in the rear brake circuit. Under these conditions, this pressure will remain constant regardless of pressure applied to the brake pedal.

If rear wheel speed should continue to decelerate faster than desired, and the difference between optimum rear wheel speed and true rear wheel speed increases to the second programmed set value (point B in Figure 10), the EBCM determines that the rear wheels are going to lock and applies a voltage pulse to the dump valve in the pressure limiting valve. Upon receiving the voltage pulse, the dump valve opens, brake fluid is released into the accumulator, and pressure in the rear wheel circuit drops. If one pulse is not enough to recover rear wheel speed to the optimum value, the pulse signal will be applied repeatedly.

As the pressure is reduced, the rear wheels regain speed, and the difference between optimum rear wheel speed and true rear wheel speed reaches the third set value (point C in Figure 10), the EBCM determines that rear wheel lockup has been prevented and stops pulsing voltage to the dump valve. The EBCM may also temporarily stop applying voltage to the isolation valve. Under these conditions, the dump valve remains closed, the isolation valve temporarily opens, and pressure in the rear brake circuit increases. With increased pressure in the rear brake circuit, rear wheel speed will again begin to decrease rapidly. If one pulse of opening the isolation valve is not enough to slow the rear wheels sufficiently, the pulse will be applied repeatedly until a satisfactory rear wheel speed has been achieved. If rear wheel speed decreases too rapidly and a possible lockup condition is again detected by the EBCM, the entire cycle is repeated.

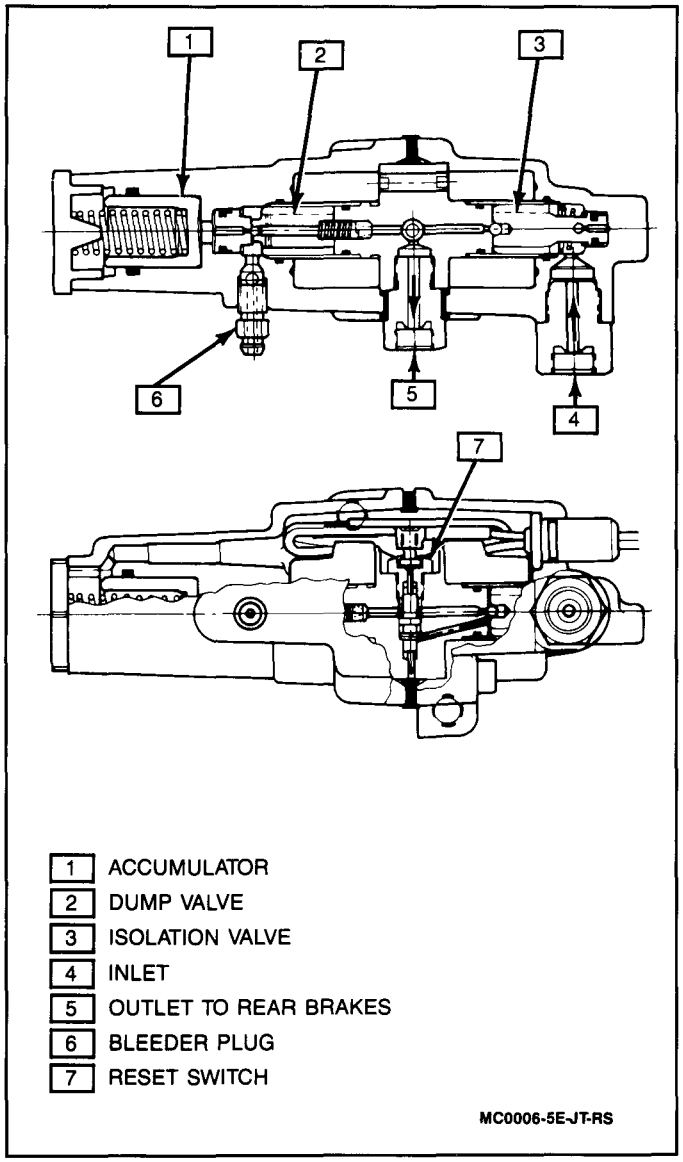

Figure 6 Pressure Limiting Valve Components

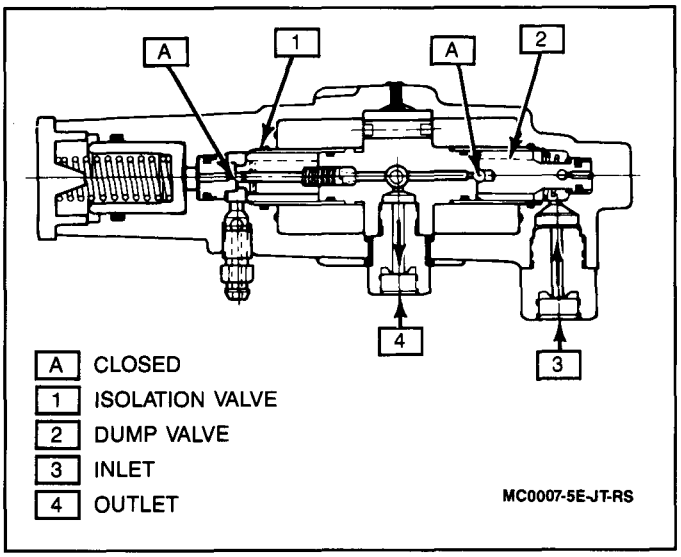

Figure 7 Pressure Limiting Valve — Constant Pressure

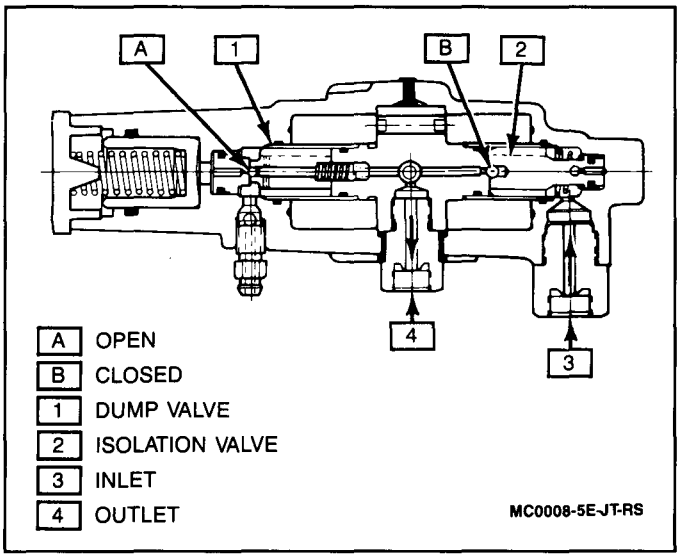

Figure 8 Pressure Limiting Valve — Reduced Pressure

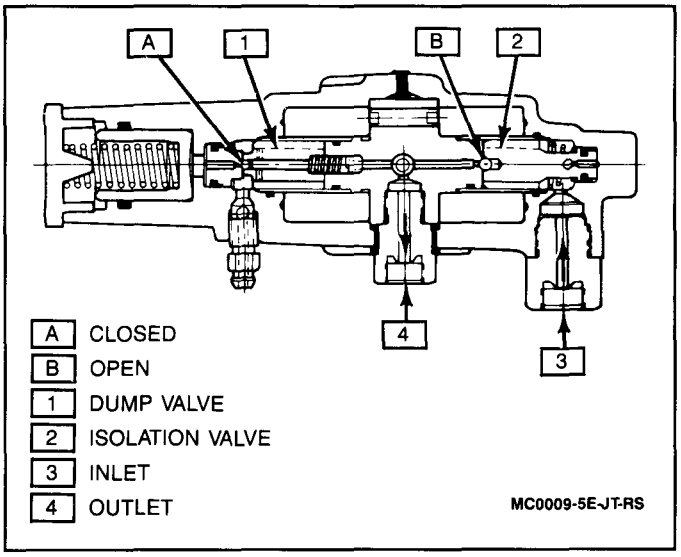

Figure 9 Pressure Limiting Valve — Increased Pressure

DIAGNOSIS

If an RWAL Brake System malfunction occurs, turning the "BRAKE" warning lamp on, perform the following preliminary checks:

- Check that the EBCM connector is securely connected.
- Check for blown fuses.
- Check that there is adequate brake fluid in the brake fluid reservoir.
- If all of the above items appear normal, refer to SECTION 5E3.
- Refer to SECTION 8A for electrical wiring diagrams.

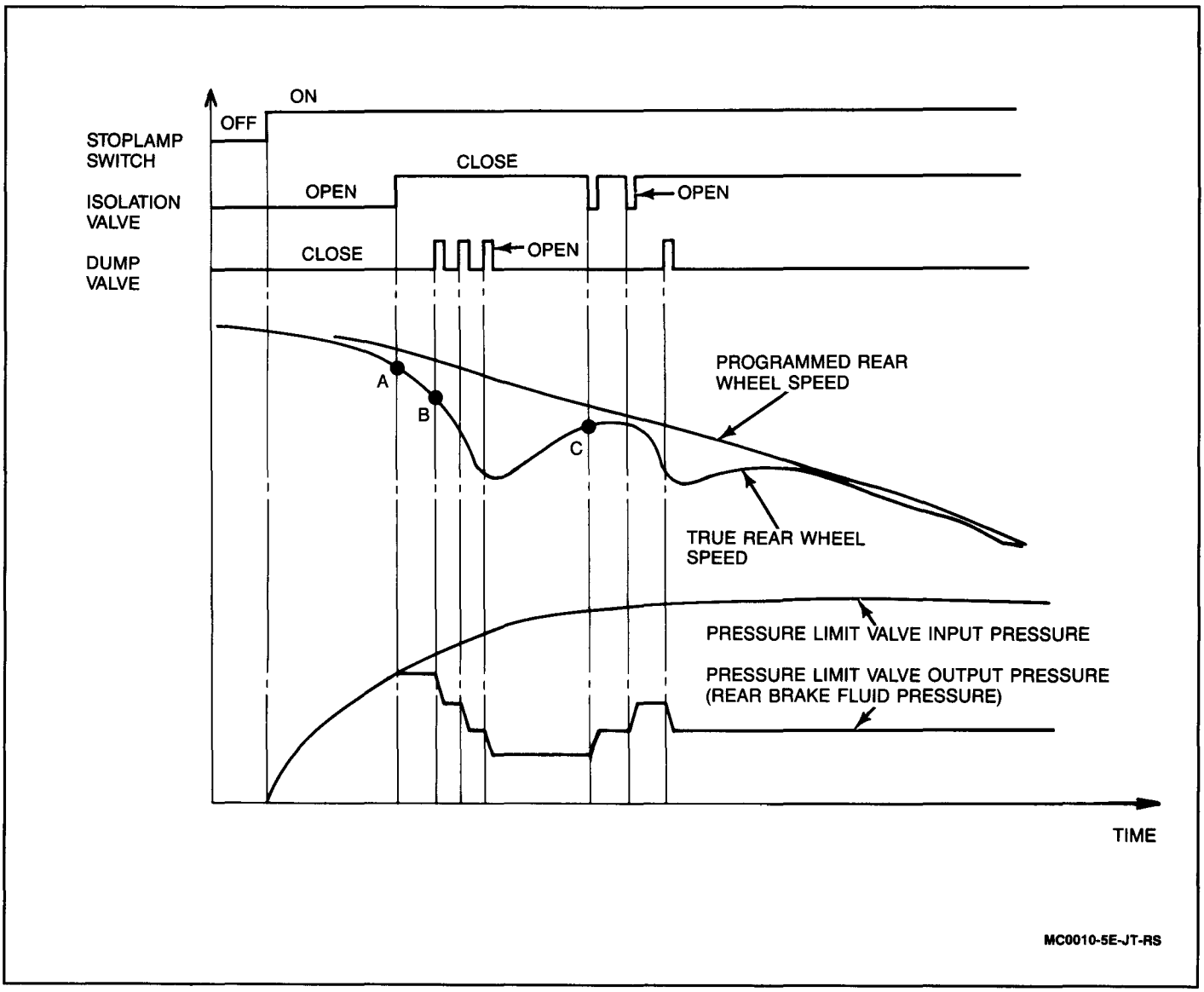

Figure 10 Rear Wheel Speed Control

ON-VEHICLE SERVICE

GENERAL SERVICE PRECAUTIONS

NOTICE: The following are general precautions which should be observed when servicing the RWAL Brake System and/or other vehicle systems. Failure to observe these precautions may result in RWAL Brake System damage.

- If welding work is to be performed on the vehicle using an electric arc welder, the EBCM connector should be disconnected during the welding operation.
- The EBCM connector should never be disconnected or connected while the ignition switch is in the "ON" position.
- During painting work, the EBCM may be subjected to a maximum of 95°C (203°F) for brief periods and a maximum of 85°C (184°F) for lengthy periods (about two hours).
- Do not use a fast charger for starting the engine.
- Disconnect the battery from the vehicle electrical system if using a fast charger.
- Never disconnect the battery from the electrical system with the engine running.
- Always note the routing, position, mounting and location of all components, wiring, connectors, clips, brackets, brake pipes, etc., when performing service on vehicles equipped with RWAL Brake Systems.
- Many components of the RWAL Brake System are not serviceable and must be replaced as assemblies. Do not disassemble any component which is designated as non-serviceable in this section.
- When filling the master cylinder with brake fluid, do not use any fluid which contains a petroleum base. Do not use a container which has been used for petroleum based fluids or a container which is wet with water. Petroleum based fluids will cause swelling and distortion of rubber parts in the hydraulic brake system. Water will mix with the brake fluid, lowering the fluid's boiling point. Keep all fluid containers capped to prevent contamination.
- When bleeding the brake system, follow the recommended manual and pressure bleeding procedures in SECTION 5.

The above procedures are not exhaustive and are to be followed when working on an RWAL Brake System equipped vehicle. Become familiar with the RWAL Brake System and how its components interact with other vehicle systems when performing repair or maintenance operations.

ELECTRONIC BRAKE CONTROL MODULE (EBCM)

Figure 11

Important

- The EBCM cannot be repaired. If found to be faulty, it must be replaced as an assembly.

NOTICE: To prevent internal EBCM damage, the ignition must be "OFF" when disconnecting or connecting the EBCM connector.

NOTICE: To prevent possible electrostatic discharge damage to the EBCM, do not touch the connector pins or soldered components on the circuit board. Do not attempt to test the EBCM with any kind of electrical tester while its connector is disconnected.

Remove or Disconnect

1. Battery negative (-) cable.
2. Connector from EBCM.
3. Two nuts and EBCM from vehicle (Figure 11).

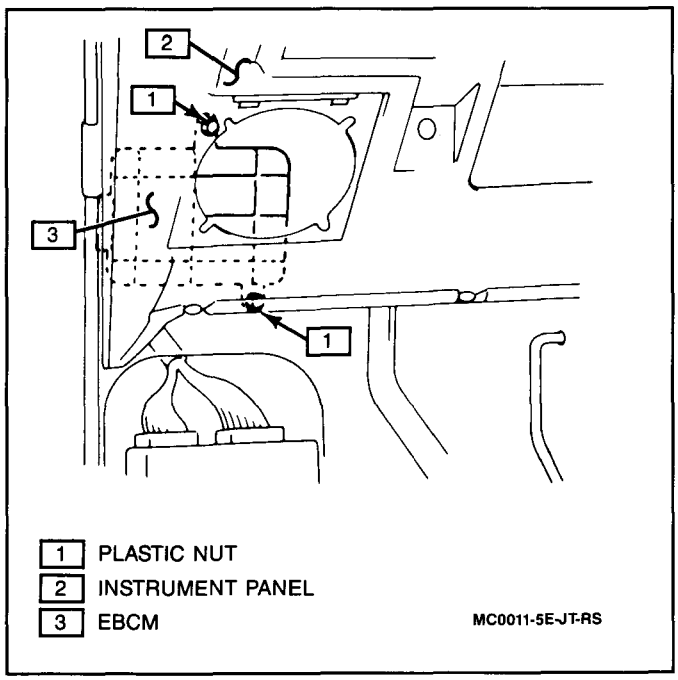

Figure 11 Removing EBCM

Install or Connect

1. EBCM to vehicle with two nuts.

Tighten

- EBCM nuts to 4 N·m (35 lb.in.).

Important

- If specified torque cannot be obtained, replace EBCM mounting nuts with new ones. Do not attempt to overtighten.

2. Connector to EBCM.
3. Battery negative (-) cable.

Tighten

- Battery negative (-) cable to 12 N·m (106 lb.in.).

REAR WHEEL SPEED SENSOR

Figures 12, 13 and 14

Remove or Disconnect

- Raise and suitably support vehicle. Refer to SECTION 0A.

1. Rear wheel speed sensor cover.
2. Electrical connector.
3. Mounting bolt and rear wheel speed sensor from vehicle (Figure 12).

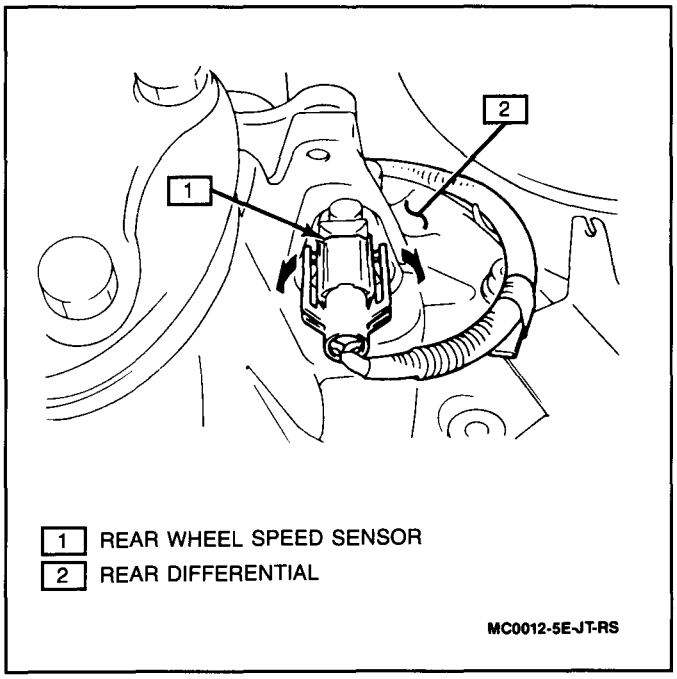

Figure 12 Removing Rear Wheel Speed Sensor

Measure

Tool Required:
J 34029-A Digital Multimeter

1. Resistance between rear wheel speed sensor terminals with a J 34029-A digital multimeter (Figure 13). If resistance is not 1282.5 to 1567.5 ohms at approximately 25°C (77°F), replace the rear wheel speed sensor.
2. Resistance between the rear wheel speed sensor terminals and the sensor's body. If resistance is less than 100k ohms, replace the rear wheel speed sensor.

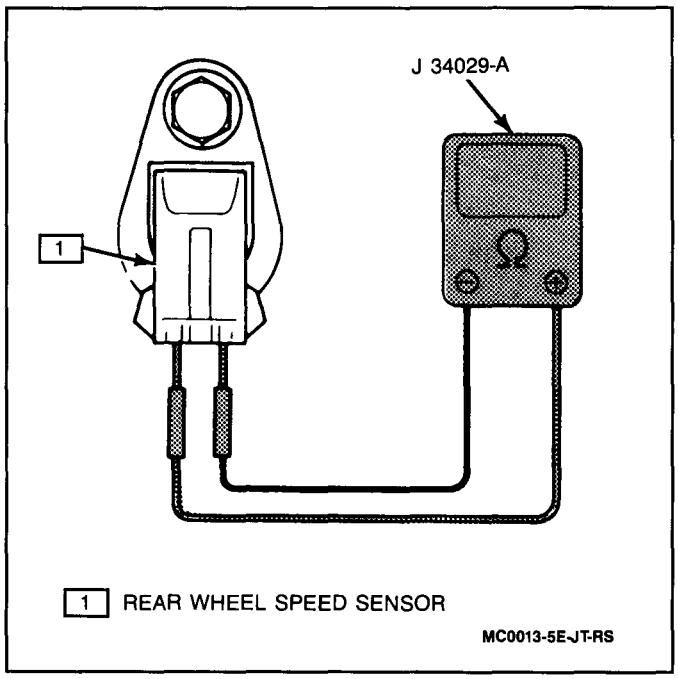

Figure 13 Measuring Rear Wheel Speed Sensor Resistance

Inspect

1. O-ring for damage or deterioration. Replace as necessary.
2. Sensor for metal particles (Figure 14). Clean as necessary.

Install or Connect

- Coat O-ring with a film of differential oil.
1. Rear wheel speed sensor to differential carrier with mounting bolt.

Tighten

- Rear wheel speed sensor mounting bolt to 23 N·m (17 lb.ft.).

2. Electrical connector.
3. Rear wheel speed sensor cover.
- Lower vehicle.

4WD SWITCH

Figure 15

Remove or Disconnect

- Raise and suitably support vehicle. Refer to SECTION 0A.
1. Electrical harness from clamp (Figure 15).
2. Electrical connector from 4WD switch.
- Lower vehicle.
3. 4WD gear shift lever boot from floor.
4. 4WD switch from transfer case.

Inspect

- O-ring for damage or deterioration. Replace as necessary.

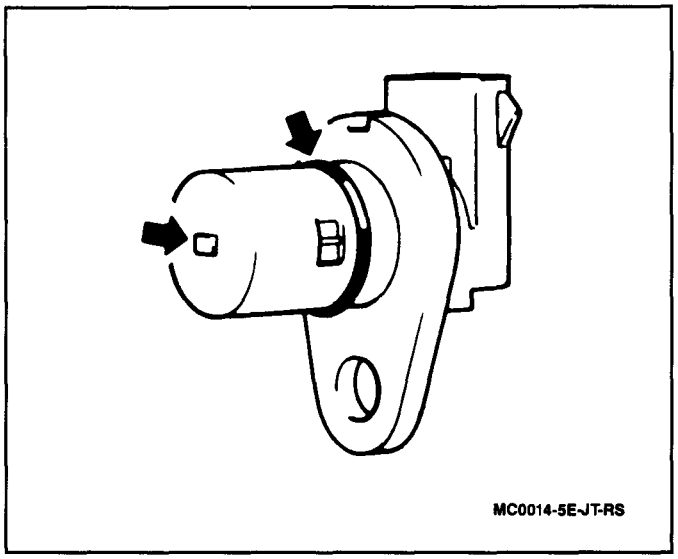

Figure 14 Inspecting Rear Wheel Speed Sensor

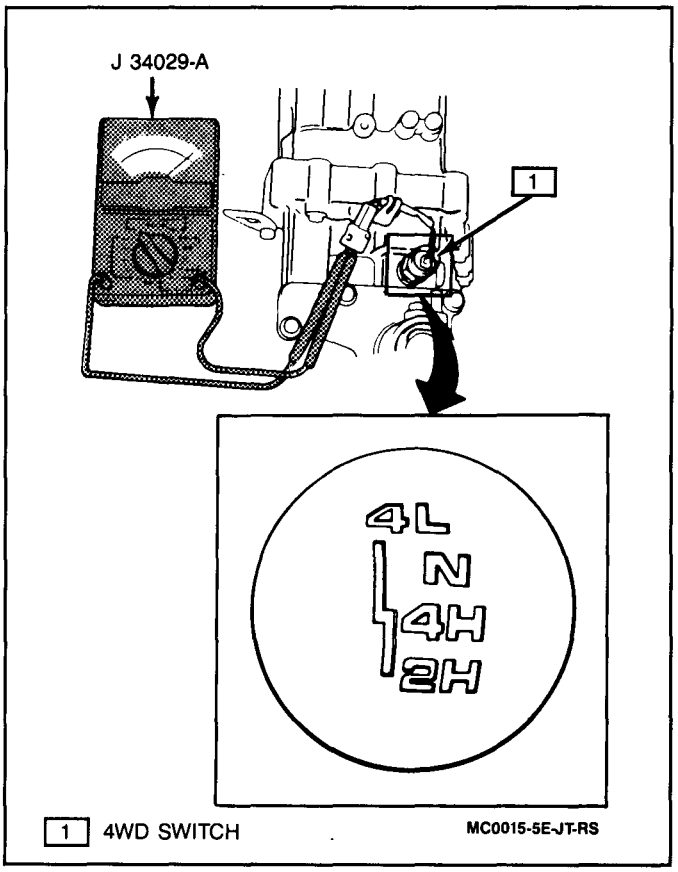

Figure 15 Checking 4WD Switch

Install or Connect

1. 4WD switch to transfer case.

Tighten

- 4WD switch to 20 N·m (15 lb.ft.).

Measure

Tool Required:
J 34029-A Digital Multimeter

- Resistance of 4WD switch with 4WD gear shift lever in "4L" and "4H" positions with a J 34029-A digital multimeter (Figure 15). If resistance is higher than 3.0 ohms, replace 4WD switch.

2. 4WD gear shift lever boot to floor.
- Raise and suitably support vehicle. Refer to SECTION 0A.
3. Electrical harness with clamp.
- Lower vehicle.

RWAL RELAY

Figures 16, 17 and 18

Remove or Disconnect

1. Battery negative (-) cable.
2. RWAL data link connector (DLC) bracket.
3. Yellow connector from RWAL relay (Figure 16).
4. RWAL relay from its bracket.

Measure

Tool Required:
J 34029-A Digital Multimeter

1. Resistance between RWAL relay terminals A and B with a J 34029-A digital multimeter (Figure 17). If resistance is not infinite, replace RWAL relay.
2. Resistance between RWAL relay terminals B and D with a J 34029-A digital multimeter (Figure 17). If resistance is not 90 to 110 ohms, replace RWAL relay.

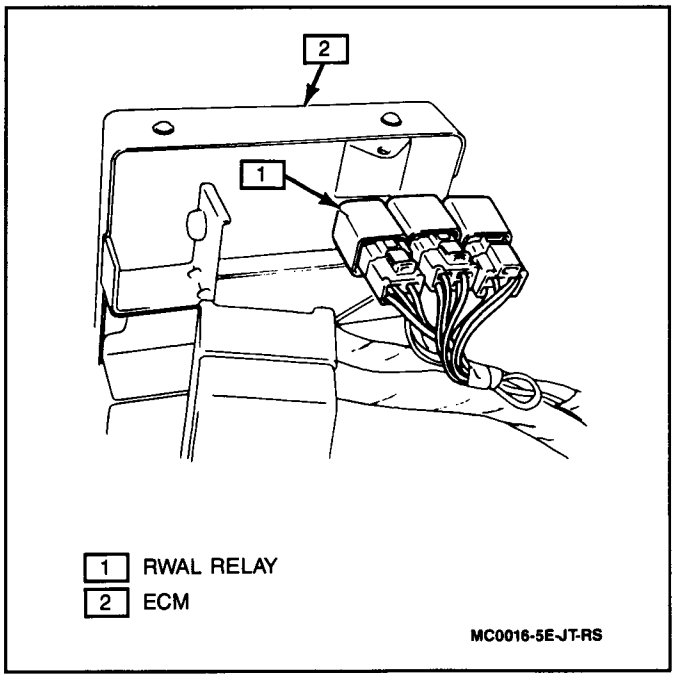

Figure 16 Removing RWAL Relay

- Connect battery voltage to RWAL relay terminals C and D (Figure 18).
3. Resistance between RWAL relay terminals A and B with a digital multimeter (Figure 18). If resistance is greater than 3.0 ohms, replace RWAL relay.

Install or Connect

1. RWAL relay to its bracket.
2. Yellow connector to RWAL relay.
3. RWAL DLC bracket.
4. Battery negative (-) cable.

Tighten

- Battery negative cable to 12 N·m (106 lb.in.).

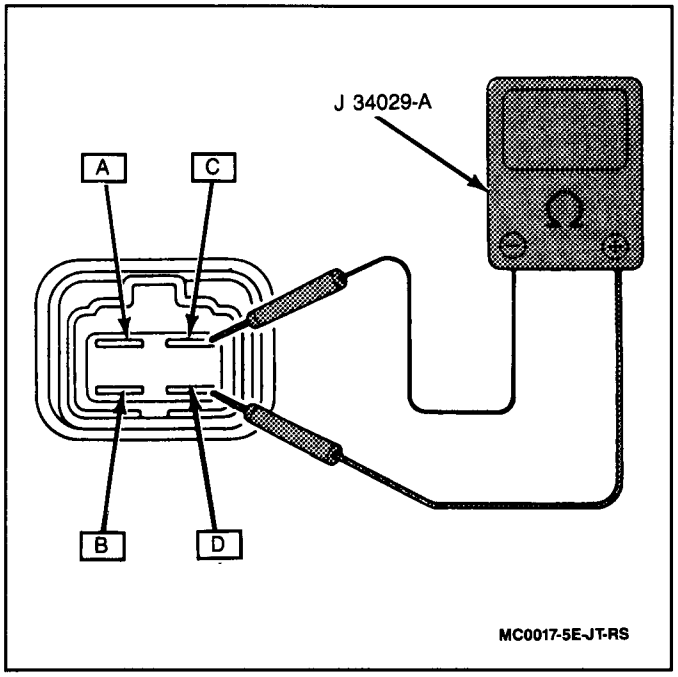

Figure 17 Measuring RWAL Relay Resistance

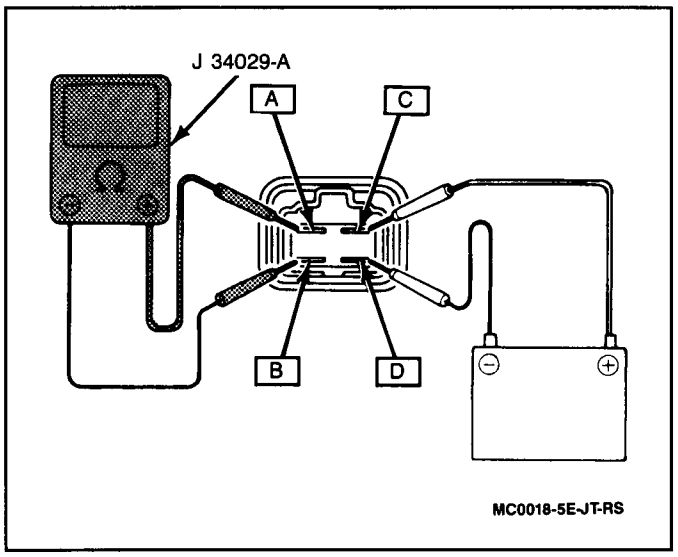

Figure 18 Checking RWAL Relay Operation

PRESSURE LIMITING VALVE

Figures 19 and 20

Important

- The pressure limiting valve cannot be repaired. If found to be faulty, the pressure limiting valve must be replaced as an assembly.

Remove or Disconnect

1. Pressure limiting valve electrical connector.
2. Master cylinder. Refer to SECTION 5A.
3. Two brake pipe flare nuts and pressure limiting valve from master cylinder (Figure 19).

Measure

Tool Required:
J 34029-A Digital Multimeter

1. Resistance between pressure limiting valve ISO and GND terminals with a J 34029-A digital multimeter (Figure 20). If resistance is not 3 to 6 ohms at approximately 20°C (68°F), replace the pressure limiting valve.
2. Resistance between pressure limiting valve DUMP and GND terminals with a J 34029-A digital multimeter (Figure 20). If resistance is not 1 to 3 ohms at approximately 20°C (68°F), replace the pressure limiting valve.
3. Resistance between pressure limiting valve RESET terminal and the valve body with a J 34029-A digital multimeter (Figure 20). If resistance is not infinite, replace the pressure limiting valve.

Install or Connect

1. Pressure limiting valve to master cylinder securing two brake pipe flare nuts.

   Tighten

   - Brake pipe flare nuts to 16 N·m (12 lb.ft.).
2. Master cylinder. Refer to SECTION 5A.
3. Pressure limiting valve electrical connector.

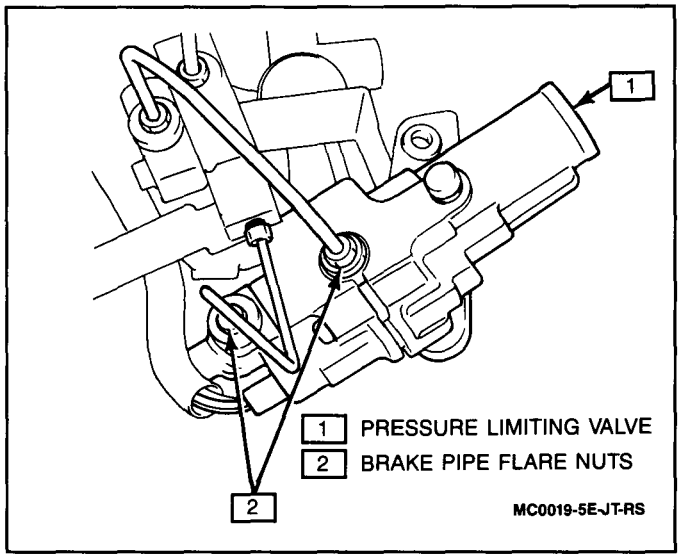

Figure 19 Pressure Limiting Valve

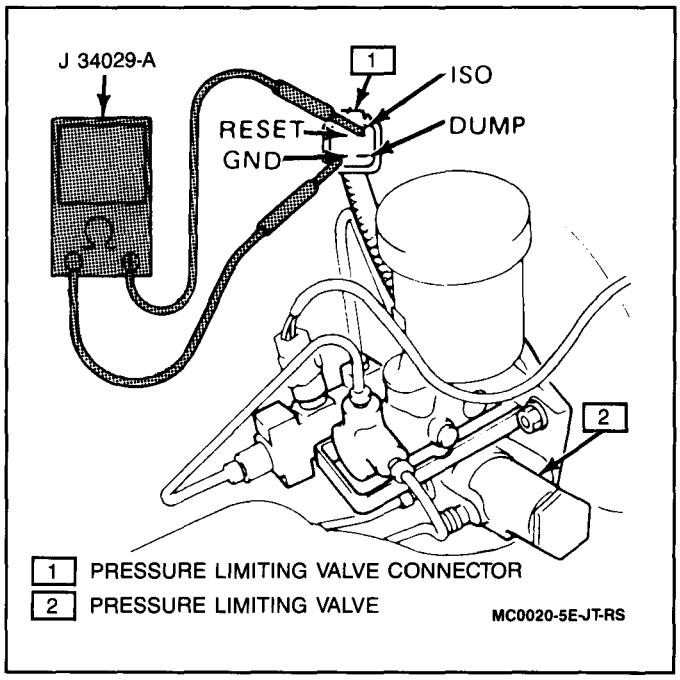

Figure 20 Checking Pressure Limiting Valve

SPECIFICATIONS

FASTENER TORQUES

Electronic Brake Control Module (EBCM) Nuts	4 N·m (35 lb.in.)
Battery Negative (-) Cable	12 N·m (106 lb.in.)
Rear Wheel Speed Sensor Mounting Bolt	23 N·m (17 lb.ft.)
4WD Switch	20 N·m (15 lb.ft.)
Brake Pipe Flare Nuts	16 N·m (12 lb.ft.)

SPECIAL TOOLS

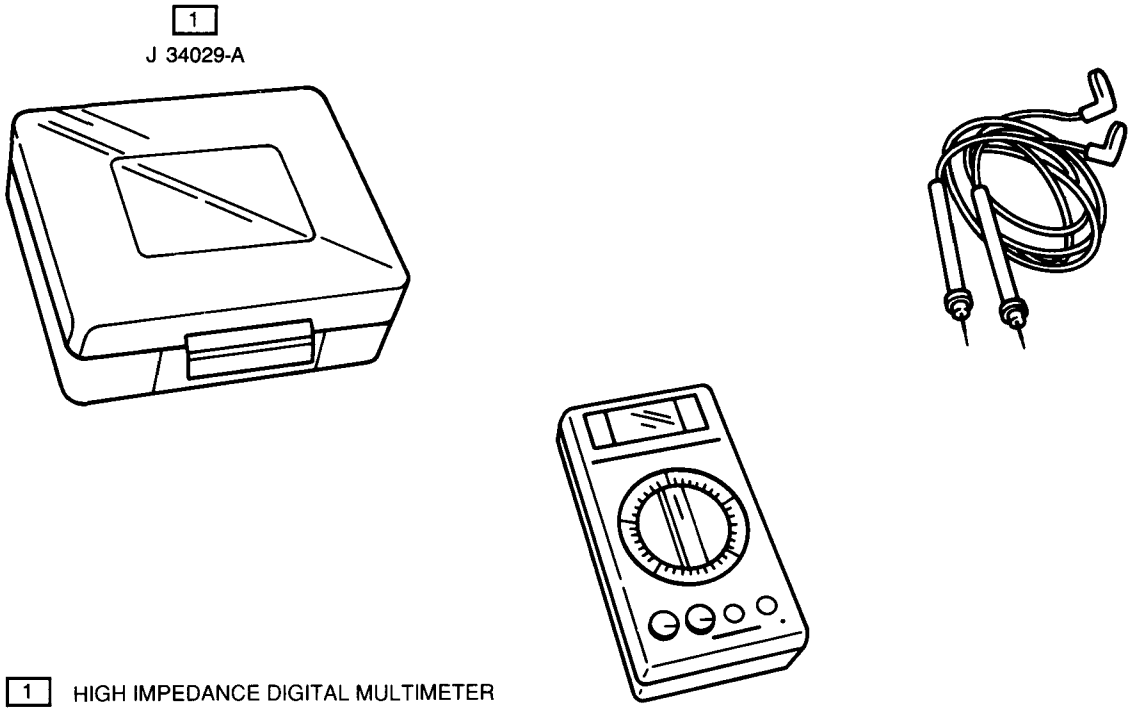

1 HIGH IMPEDANCE DIGITAL MULTIMETER

KC0003-6D1-MS-RS

SECTION 5E3

REAR WHEEL ANTILOCK (RWAL) BRAKE SYSTEM DIAGNOSIS

CAUTION: Certain components in the Rear Wheel Antilock (RWAL) Brake System are not intended to be serviced individually. Attempting to remove or disconnect certain system components, such as the isolation or dump valves, may result in personal injury and/or improper system operation. Only those components with approved removal and installation procedures in Sections 5, 5E and 5E3 should be serviced.

NOTICE: Do not use a fast charger for engine starting or for battery charging while the battery is connected to the vehicle's electrical system. If a fast charger is used in this manner, RWAL related fuses could blow and serious damage could be caused to many of the vehicle's electrical components. Always disconnect the battery negative (-) cable before charging a battery.

NOTICE: When fasteners are removed, always reinstall them at the same location from which they were removed. If a fastener needs to be replaced, use the correct part number fastener for that application. If the correct part number fastener is not available, a fastener of equal size and strength (or stronger) may be used. Fasteners that are not reused, and those requiring thread-locking compound, will be called out. The correct torque values must be used when installing fasteners that require them. If the above procedures are not followed, parts or system damage could result.

CONTENTS

General Description 5E3-1
Component Location Views 5E3-1
Basic Knowledge Required 5E3-1
RWAL Brake System Self-Diagnostics 5E3-2
Flash Code Diagnostics 5E3-2
Intermittent Failures 5E3-2
Clearing Diagnostic Trouble Codes 5E3-3
On-Vehicle Service 5E3-3
General Service Precautions 5E3-3
"BRAKE" Warning Lamp Diagnosis 5E3-3
RWAL Brake System Operation 5E3-3
Flash Code Diagnosis Procedures 5E3-3
RWAL Brake System Schematic 5E3-4
Diagnostic Circuit Check 5E3-5
RWAL Diagnostic Trouble Code (DTC) and Condition Table 5E3-8
Diagnostic Trouble Code 2 ..... 5E3-9
Diagnostic Trouble Code 3 ..... 5E3-10
Diagnostic Trouble Code 4 ..... 5E3-11
Diagnostic Trouble Code 5 ..... 5E3-13
Diagnostic Trouble Code 6 ..... 5E3-14
Diagnostic Trouble Code 7 ..... 5E3-16
Diagnostic Trouble Code 8 ..... 5E3-17
Diagnostic Trouble Code 9 ..... 5E3-18
Diagnostic Trouble Code 10 ..... 5E3-19
Diagnostic Trouble Code 11 ..... 5E3-20
Diagnostic Trouble Code 13 ..... 5E3-21
Manual RWAL Brake System Circuit Check ... 5E3-22
Special Tools 5E3-23

GENERAL DESCRIPTION

COMPONENT LOCATION VIEWS

RWAL Brake System component location views can be found in SECTION 8A.

BASIC KNOWLEDGE REQUIRED

Before using this section, it is important that you have a basic knowledge of the following items:

- **Basic Electrical Circuits**
  You should understand the basic theory of electricity and know the meaning of potential (voltage), current (amperage) and resistance (ohms). You should understand how circuits are affected when an open or a short occurs. You should be able to read and understand a basic wiring diagram.
- **Use of Circuit Testing Tools**
  You should know how to use a test light and how to use jumper wires to bypass components as a method of testing circuits. You should be familiar with the use of the J 34029-A digital multimeter. With the multimeter, you should know how to measure potential current and resistance by using the meter's controls.
- **Sources of Additional Information**
  If you need a review of basic electrical troubleshooting skills, you can find some very useful information in the introductory cells of SECTION 8A.

RWAL BRAKE SYSTEM SELF-DIAGNOSTICS (Diagnostic Trouble Codes)

The Electronic Brake Control Module (EBCM) contains the RWAL self-diagnosis programming. The module is equipped with a self-diagnostic capability that can detect and isolate RWAL system failures. Should a failure be detected, the EBCM sets a diagnostic trouble code (DTC) that represents that specific failure.

There are eleven DTCs that can be set by the EBCM. All of these codes will cause the "BRAKE" warning lamp to illuminate.

The EBCM performs an automatic test once during each ignition cycle at engine start and during normal driving operations. If any error is detected during these tests, RWAL Brake System operation ceases and the EBCM sets a DTC which illuminates the "BRAKE" warning lamp in the instrument cluster.

FLASH CODE DIAGNOSTICS

Figure 1

Flash code diagnostics must be used to identify the diagnostic trouble codes (DTCs) that are stored in the EBCM's memory. Flash code diagnostics cannot be read if the "BRAKE" warning lamp is steadily illuminated (by low brake fluid or an engaged parking brake).

CAUTION: Park the vehicle in a level area and place chocks in front of the front wheels and behind the rear wheels. This action will prevent the vehicle from moving while RWAL diagnostic procedures are being performed. Failure to follow this procedure could result in personal injury or system damage.

To enable flash code diagnostics, release the parking brake and check to make certain that the brake fluid level in the reservoir is adequate for normal system functions and proper "BRAKE" warning lamp operation. Turn the ignition switch to "ON." Using a service jumper wire, short together terminals 3 and 5 of the rear wheel antilock data link connector (RWAL DLC) for more than 2 seconds (Figure 1). Remove the jumper wire, observe the "BRAKE" warning lamp and read the DTC.

Each DTC consists of some short flashes and a final long flash. Count the flashes, including both the short ones and the final long one, for DTC identification. Be sure to read the DTC several times to be sure that the proper one is identified. Once the flash code diagnostic mode has been enabled, the flashing continues until the ignition switch has been turned to "OFF."

If the ignition switch is turned to "OFF" before the DTC is identified, it will probably be lost. There may be cases where a hard fault exists and the DTC will reappear after the ignition switch is again turned to "ON" but, in most cases, the driving condition that produced it will have to be repeated. If the problem only occurs intermittently, the DTC may be extremely difficult to reproduce. Therefore, it is strongly recommended that all DTCs be fully identified before the ignition switch is turned to "OFF." For more information on intermittent diagnostic trouble codes, refer to "Intermittent Failures" later in this section.

In situations where the EBCM detects more than one fault, only the fault with the lowest number DTC will be displayed. This DTC must be diagnosed and corrected before any higher number DTC can be displayed and diagnosed.

INTERMITTENT FAILURES

As with most electrical systems, RWAL intermittent failures may be difficult to accurately diagnose. Most intermittent problems are caused by faulty electrical connections or wiring. When an intermittent failure is encountered, check suspect circuitry for the following items:

- Poor mating of connector halves or terminals not fully seated (backed out) in the connector body.
- Improperly formed or damaged terminals.
- Poor terminal-to-wire connections. This requires removing the terminal from the connector for a thorough examination.
- Loose, corroded or dirty ground connections.

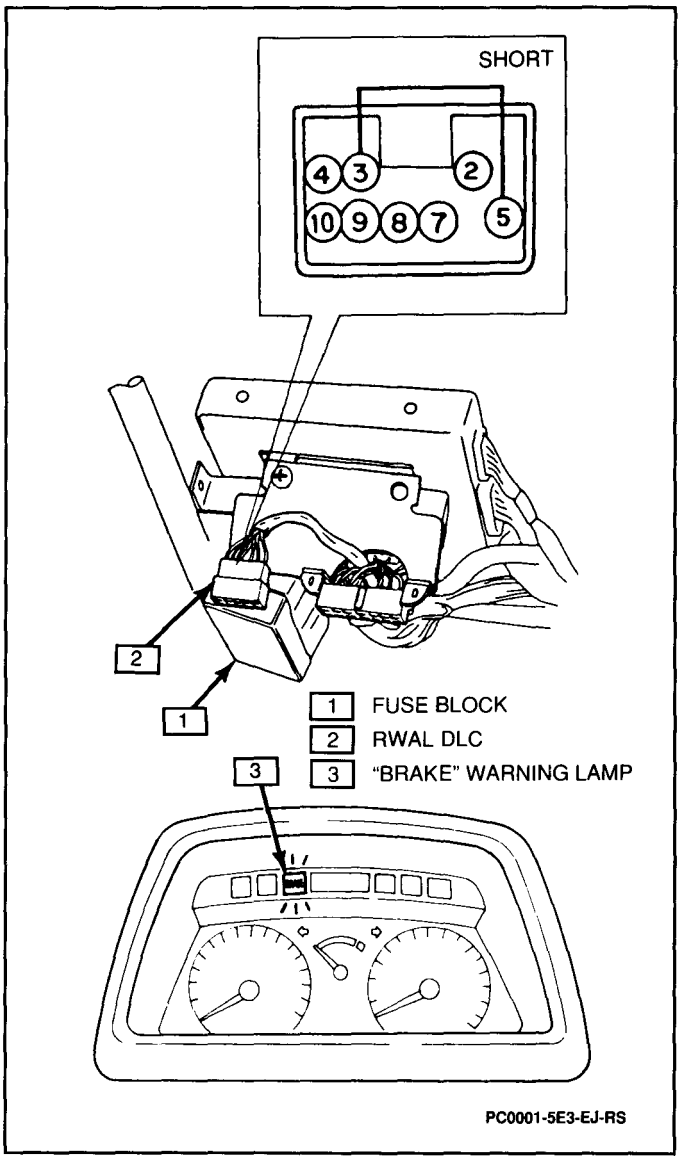

Figure 1 Enabling Flash Code Diagnostics

CLEARING DIAGNOSTIC TROUBLE CODES

All that is necessary to clear a diagnostic trouble code (DTC) is to turn the ignition switch to "OFF" after the flash code diagnostic mode has been entered.

ON-VEHICLE SERVICE

When a diagnostic chart makes reference to removing, replacing or checking a component for proper installation, refer to SECTION 5E.

After all diagnosis and repairs have been completed, road test the vehicle to ensure proper RWAL Brake System operation and confirm that the "BRAKE" warning lamp is no longer illuminated.

GENERAL SERVICE PRECAUTIONS

NOTICE: The following are general precautions which should be observed when servicing the RWAL Brake System and/or other vehicle systems. Failure to observe these precautions may result in RWAL Brake System damage.

- If welding work is to be performed on the vehicle using an electric arc welder, the EBCM connector should be disconnected during the welding operation.
- The EBCM connector should never be disconnected or connected while the ignition switch is in the "ON" position.
- During painting work, the EBCM may be subjected to a maximum of 95°C (203°F) for brief periods and a maximum of 85°C (184°F) for lengthy periods (about two hours).
- Do not use a fast charger for starting the engine.
- Disconnect the battery from the vehicle electrical system if using a fast charger.
- Never disconnect the battery from the electrical system with the engine running.
- Always note the routing, position, mounting and location of all components, wiring, connectors, clips, brackets, brake pipes, etc., when performing service on vehicles equipped with RWAL Brake Systems.
- Many components of the RWAL Brake System are not serviceable and must be replaced as assemblies. Do not disassemble any component which is designated as non-serviceable in this section.
- When filling the master cylinder with brake fluid, do not use any fluid which contains a petroleum base. Do not use a container which has been used for petroleum based fluids or a container which is wet with water. Petroleum based fluids will cause swelling and distortion of rubber parts in the hydraulic brake system. Water will mix with the brake fluid, lowering the fluid's boiling point. Keep all fluid containers capped to prevent contamination.
- When bleeding the brake system, follow the recommended manual and pressure bleeding procedures in SECTION 5.

The above procedures are not exhaustive and are to be followed when working on an RWAL Brake System equipped vehicle. Become familiar with the RWAL Brake System and how its components interact with other vehicle systems when performing repair or maintenance operations.

"BRAKE" WARNING LAMP DIAGNOSIS

For all "BRAKE" warning lamp diagnosis procedures that are not related to RWAL Brake System self-diagnosis, refer to SECTION 8A.

RWAL BRAKE SYSTEM OPERATION

For detailed information on the operation of the RWAL Brake System and its various components, refer to SECTION 5E.

FLASH CODE DIAGNOSIS PROCEDURES

Once a diagnostic trouble code (DTC) has been identified, follow the appropriate diagnosis chart on the following pages.

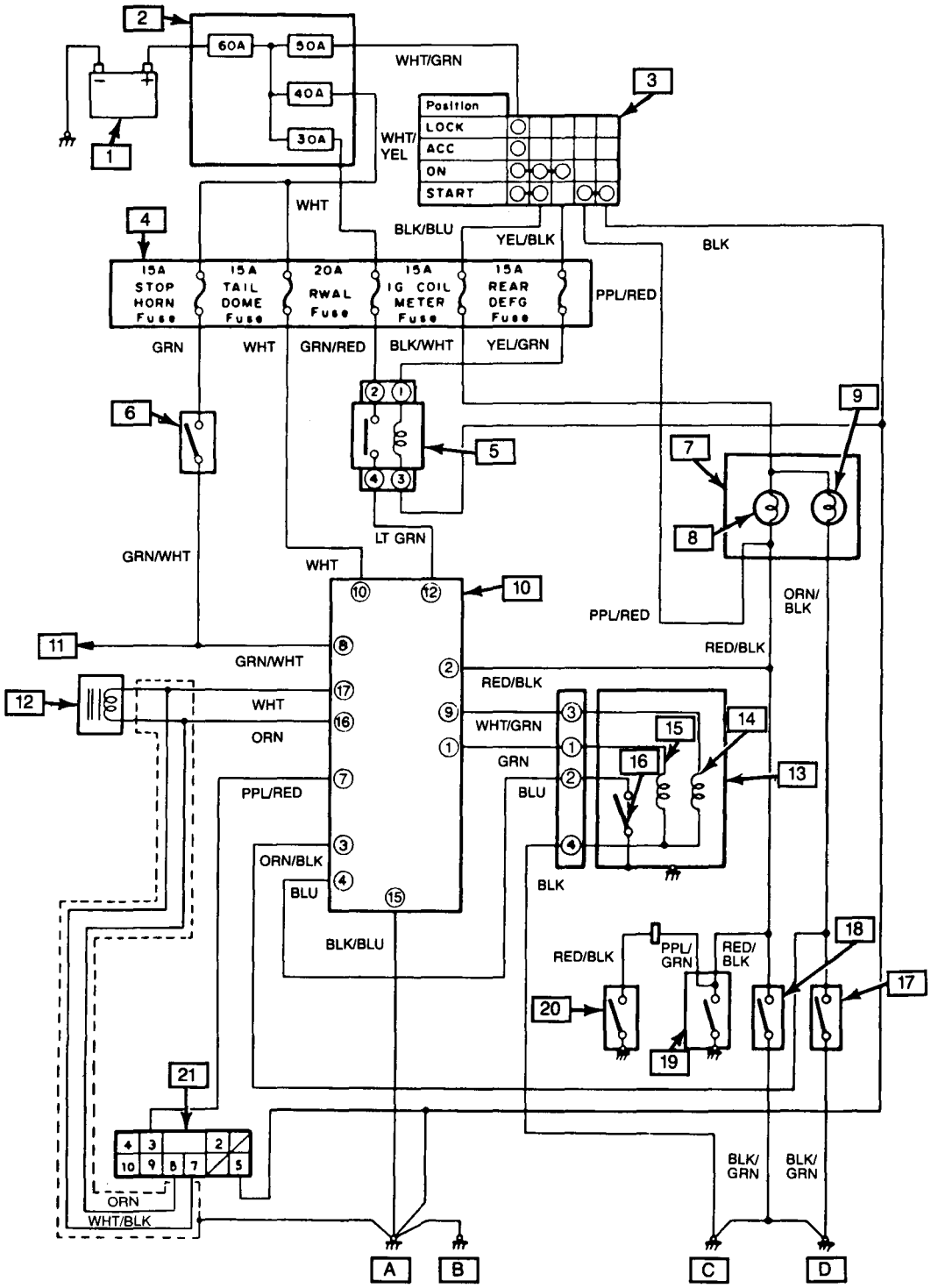

A	LEFT "A" PILLAR GROUND POINT	6	STOPLAMP SWITCH	15	ISOLATION VALVE SOLENOID
B	RIGHT "A" PILLAR GROUND POINT	7	INSTRUMENT CLUSTER	16	RESET SWITCH
C	IGNITION COIL GROUND POINT	8	"BRAKE" WARNING LAMP	17	4WD SWITCH
D	DISTRIBUTOR CASE GROUND POINT	9	4WD LAMP	18	BRAKE FLUID LEVEL SWITCH
1	BATTERY	10	EBCM	19	DIFFERENTIAL SWITCH
2	FUSIBLE LINK BOX	11	TO STOPLAMPS	20	PARKING BRAKE SWITCH
3	IGNITION SWITCH	12	REAR WHEEL SPEED SENSOR	21	RWAL DLC
4	FUSE BLOCK	13	PRESSURE LIMITING VALVE		
5	RWAL RELAY	14	DUMP VALVE SOLENOID		

PC9999-5E-EJ-RS

Figure 2 RWAL Brake System Schematic

DIAGNOSTIC CIRCUIT CHECK

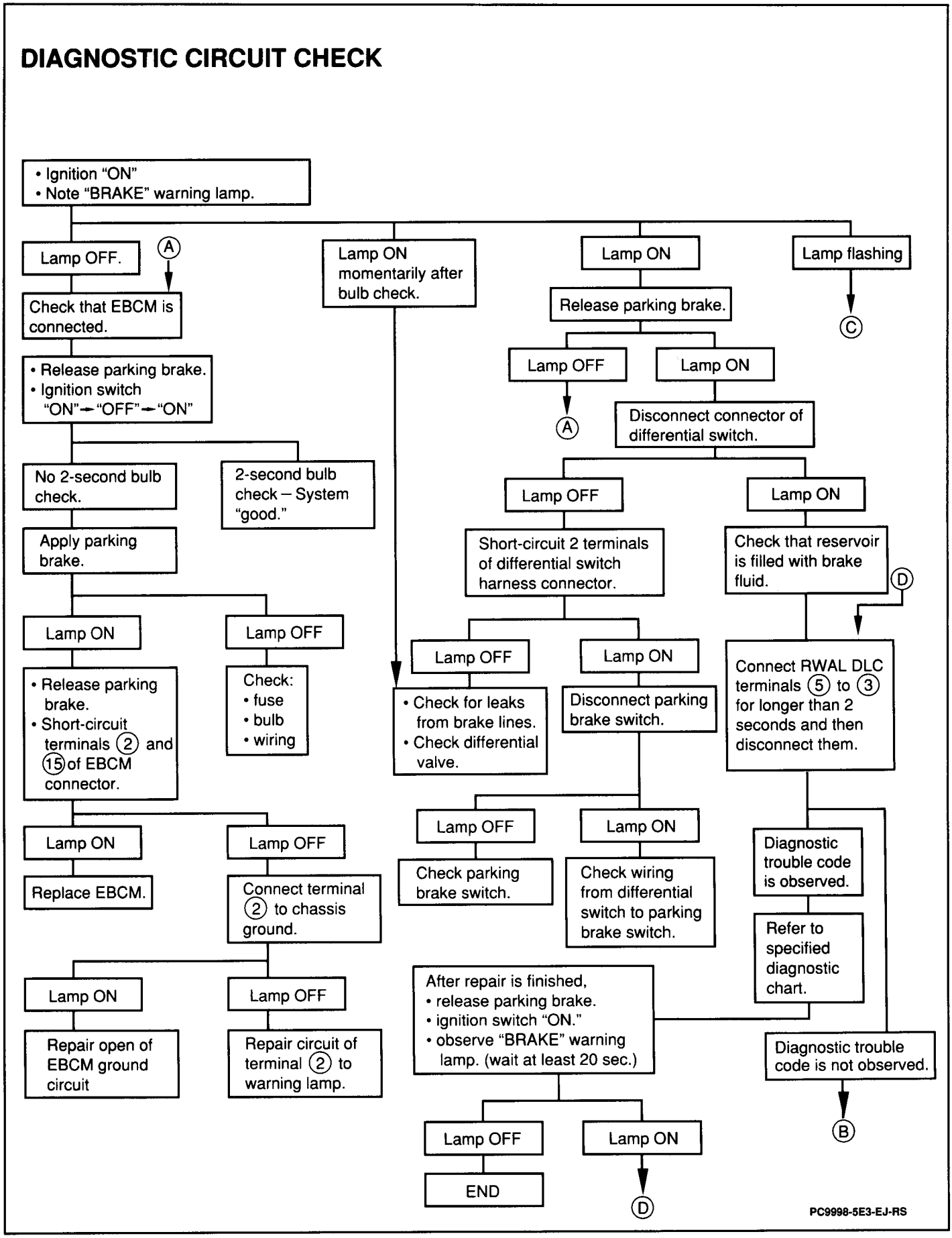

Figure 3 Diagnostic Circuit Check — 1 of 3

DIAGNOSTIC CIRCUIT CHECK (CONTINUED)

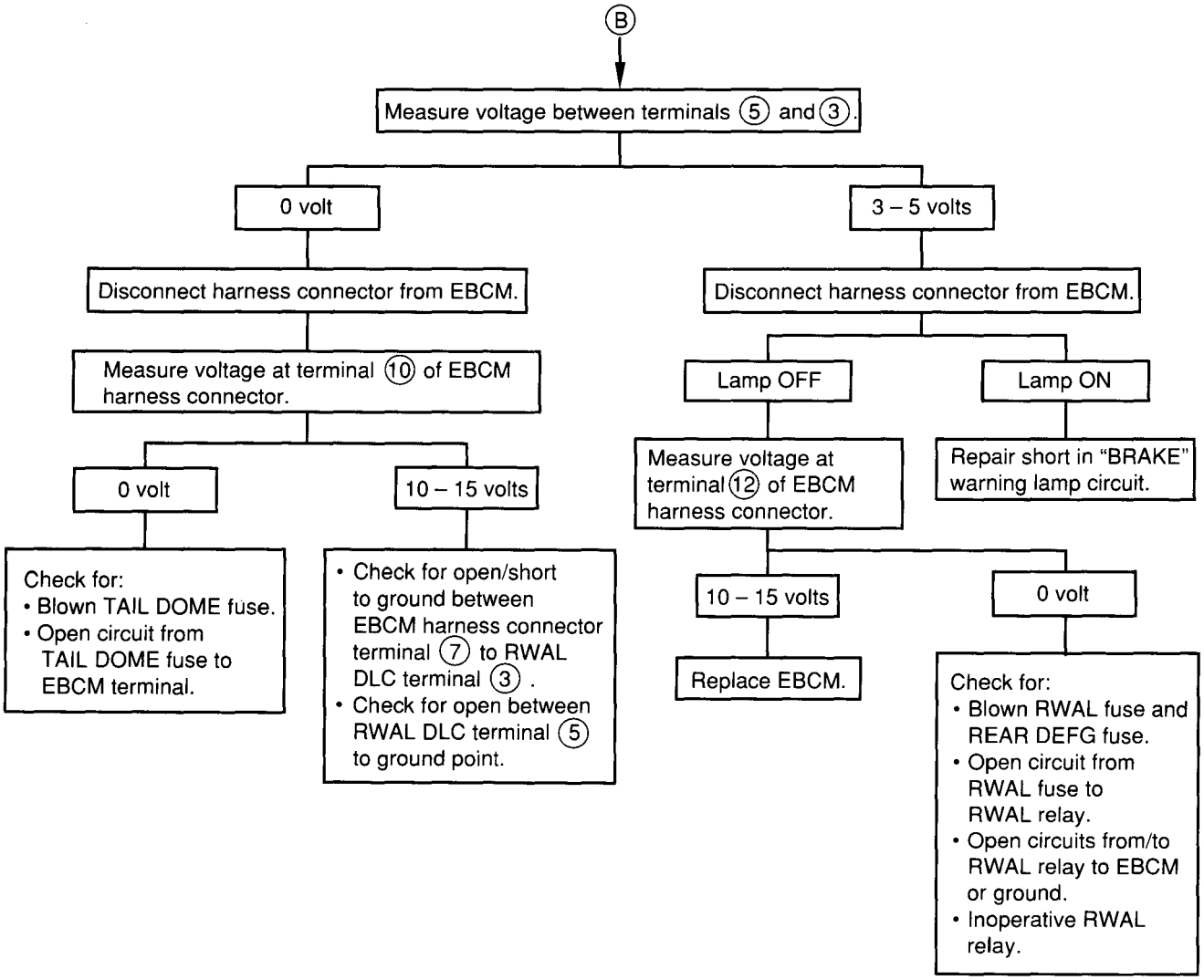

PC0003-5E3-EJ-RS

Figure 4 Diagnostic Circuit Check — 2 of 3

DIAGNOSTIC CIRCUIT CHECK (CONTINUED)

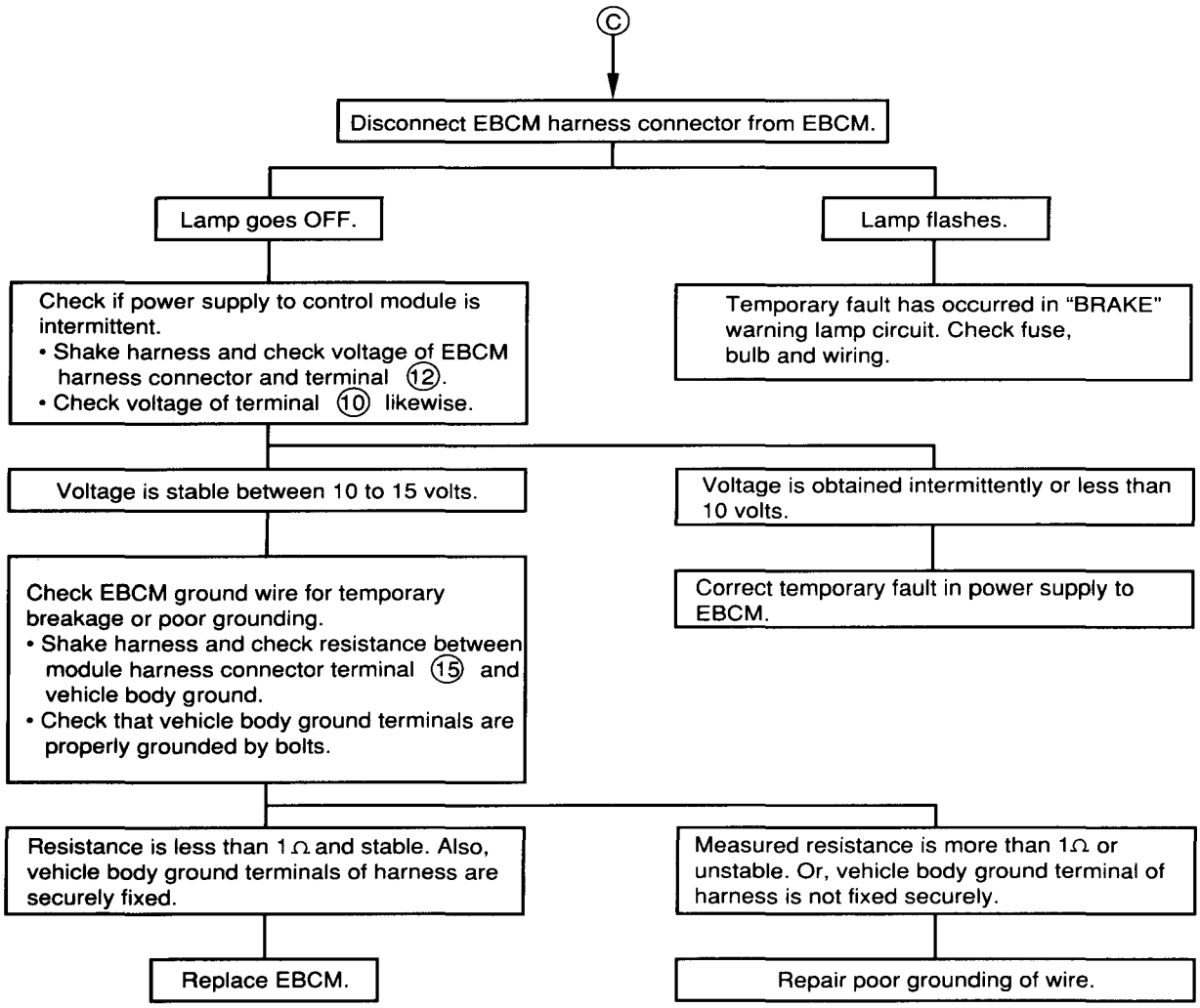

NC0004-5E1-JT-RS

Figure 5 Diagnostic Circuit Check — 3 of 3

RWAL DIAGNOSTIC TROUBLE CODE (DTC) AND CONDITION TABLE

EXAMPLE: DTC 4

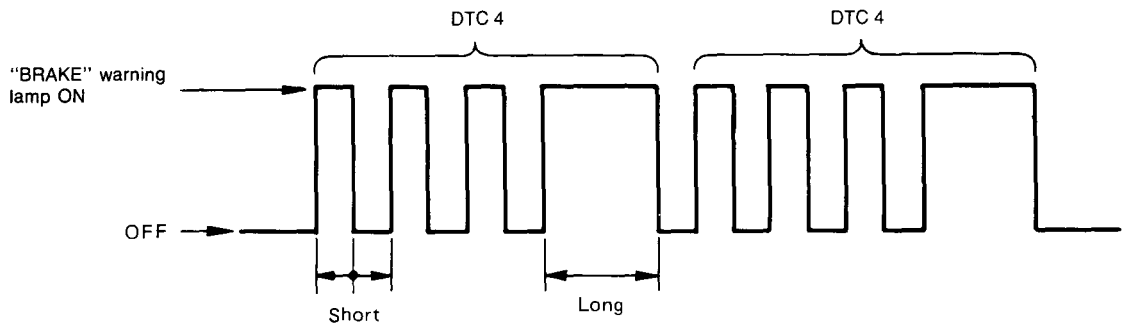

DIAGNOSTIC TROUBLE CODE NO.	CONDITION	ACTION TO TAKE
2	Open isolation solenoid circuit	Diagnose according to diagnosis procedure for each DTC.
3	Open dump solenoid circuit	
4	Valve reset switch closed	
5	System dumps too many times (Condition occurs when brake is applied during driving.)	
6	Rear wheel speed sensor signal changed rapidly (Condition only occurs while driving.)	
7	Shorted isolation solenoid circuit	
8	Shorted dump solenoid circuit	
9	Open rear wheel speed sensor circuit	
10	Stop light switch remains closed	
11	Shorted rear wheel speed sensor circuit	
13	EBCM malfunction	

PC9997-5E3-EJ-RS

Figure 6 RWAL Diagnostic Trouble Code (DTC) and Condition Table

DIAGNOSTIC TROUBLE CODE 2

Open isolation solenoid circuit

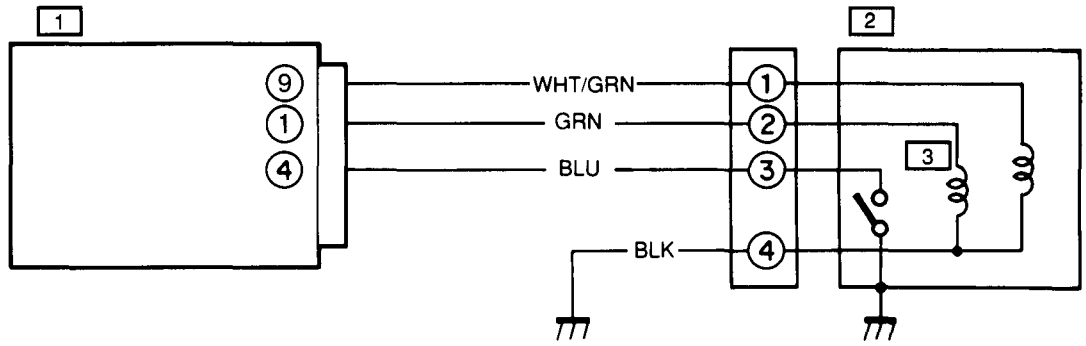

1 EBCM
2 PRESSURE LIMITING VALVE
3 ISOLATION VALVE SOLENOID

- Ignition switch "OFF".
- Disconnect EBCM harness connector from EBCM.
- Measure resistance between EBCM harness connector terminal (1) and chassis ground.

3-6 Ω.
- Check connection at EBCM harness.
- Replace EBCM.

Greater than 6 Ω.
- Disconnect pressure limiting valve harness connector.
- Measure resistance between valve connector isolation solenoid terminal (2) and ground terminal (4).

Resistance 3-6 Ω.
- Repair open in GRN wire or BLK wire.

Resistance greater than 6 Ω.
- Open isolation solenoid. Replace pressure limiting valve.

NC9996-5E2-JT-RS

Figure 7 Diagnostic Trouble Code 2

DIAGNOSTIC TROUBLE CODE 3

Open dump solenoid circuit

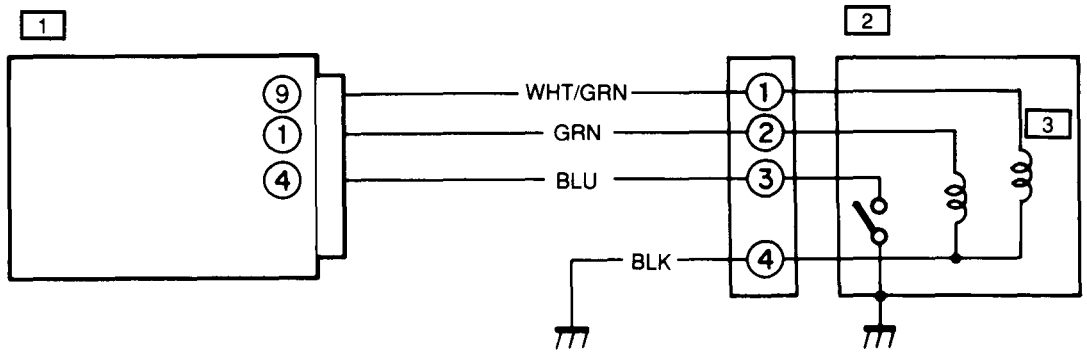

- Ignition switch "OFF"
- Disconnect EBCM harness connector from EBCM.
- Measure resistance between EBCM harness connector terminal (9) and chassis ground.

Resistance 1– 3Ω.

Check connection at EBCM harness.

Replace EBCM.

Resistance greater than 3Ω.

- Disconnect pressure limiting valve harness connector.
- Measure resistance between valve connector dump solenoid terminal (1) and ground terminal (4).

Resistance 1 –3Ω.

Repair open in WHT/GRN wire or BLK wire.

Resistance greater than 3Ω.

Open dump solenoid.
Replace pressure limiting valve.

NC9995-5E2-JT-RS

Figure 8 Diagnostic Trouble Code 3

DIAGNOSTIC TROUBLE CODE 4

Valve reset switch closed

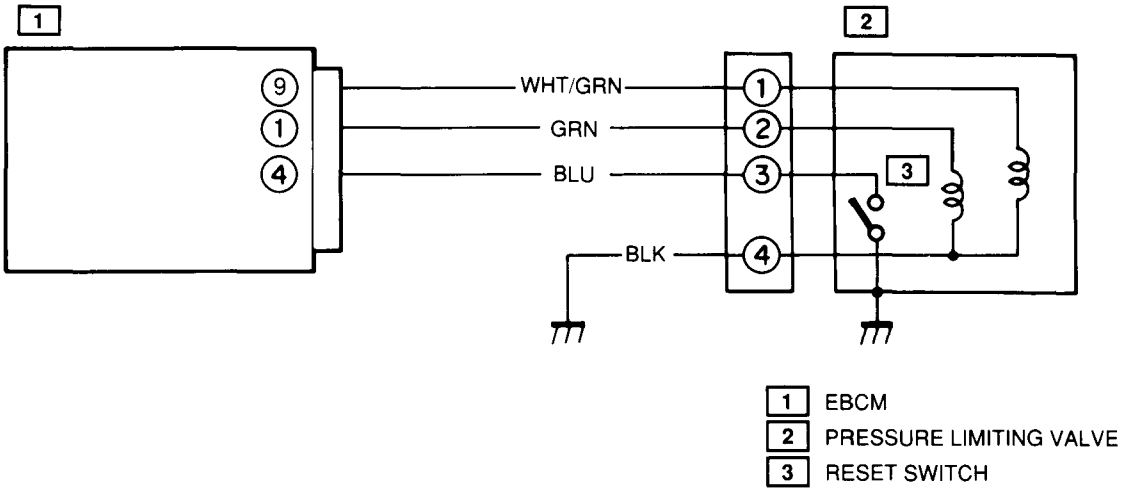

NOTE:
This code remains in memory as long as +12V battery power is supplied to EBCM. Therefore, to erase this code, disconnect negative (-) cable from battery for at least 5 seconds.

- Ignition switch "OFF."
- Disconnect EBCM harness connector from EBCM.
- Measure resistance between EBCM harness connector terminal (4) and chassis ground.

Resistance greater than 10 kΩ.

Check connection at EBCM harness.

Replace EBCM.

Resistance less than 10 kΩ.

- Disconnect pressure limiting valve connector.
- Measure resistance between connector terminals (3) and (4) (valve side).

Resistance greater than 10 kΩ.

(A)

Resistance less than 10 kΩ.

Valve reset switch malfunction. Replace pressure limiting valve.

NC9994-5E2-JT-RS

Figure 9 Diagnostic Trouble Code 4 — 1 of 2

DIAGNOSTIC TROUBLE CODE 4 (CONTINUED)

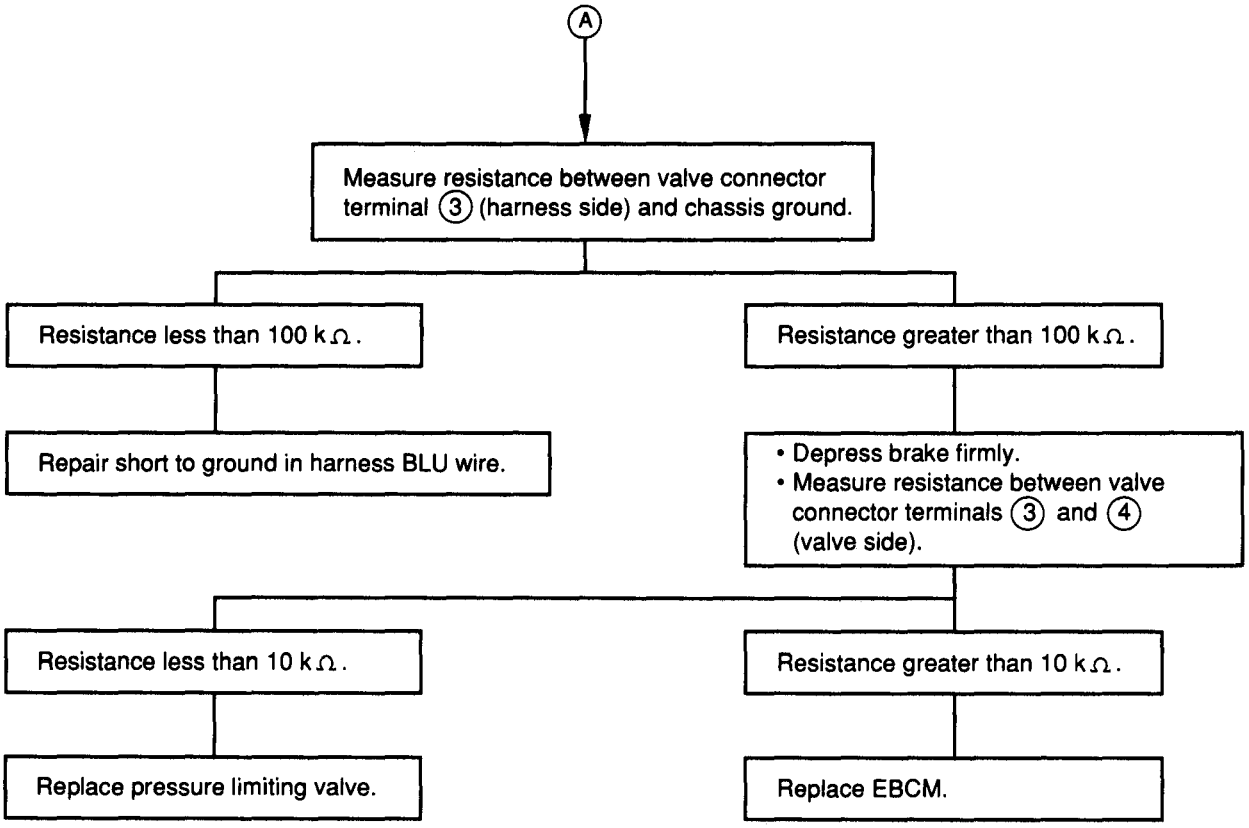

NC9993-5E2-JT-RS

Figure 10 Diagnostic Trouble Code 4 — 2 of 2

DIAGNOSTIC TROUBLE CODE 5

System dumps too many times. It is possible that this condition arises only when brake is applied during driving.

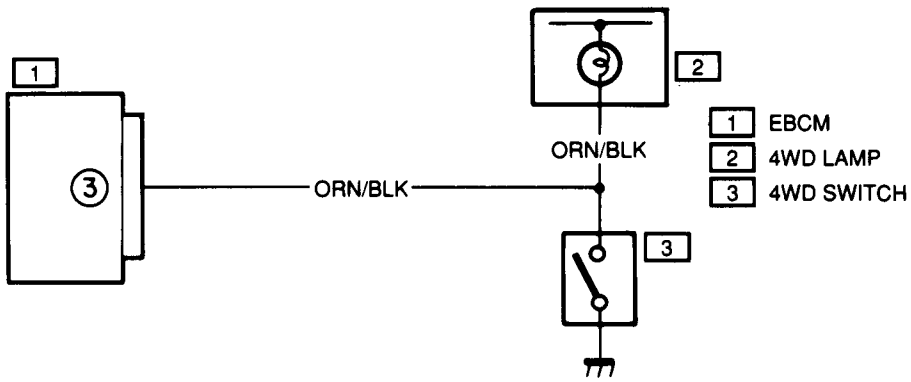

NOTE:

This code remains in memory as long as +12V battery power is supplied to EBCM. Therefore, to erase this code, disconnect negative (–) cable from battery for at least 5 seconds.

Check if rear wheel brake drags.

- No dragging occurs. → Check whether vehicle is 4WD model or 2WD model.
- Dragging occurs. → Correct to eliminate rear wheel brake dragging.

Check whether vehicle is 4WD model or 2WD model.

- 4WD model →
  - Disconnect EBCM harness connector from EBCM.
  - Shift to 4WD setting.
  - Turn ignition switch "ON."
  - Check voltage of EBCM harness connector (3).
  - Less than 1 volt. →
    - Replace pressure limiting valve.
    - Erase diagnostic code.
    - Drive in 2WD setting.
    - In safe area, apply hard brake and check that rear wheels do not lock.
  - Greater than 1 volt. → Repair 4WD switch or open circuit of its wiring.
- 2WD model → (same as above)

NC9992-5E2-JT-RS

Figure 11 Diagnostic Trouble Code 5

DIAGNOSTIC TROUBLE CODE 6

Rear wheel speed sensor signal changed rapidly. This condition is detected only while driving at higher than 56 km/h (35 mph).

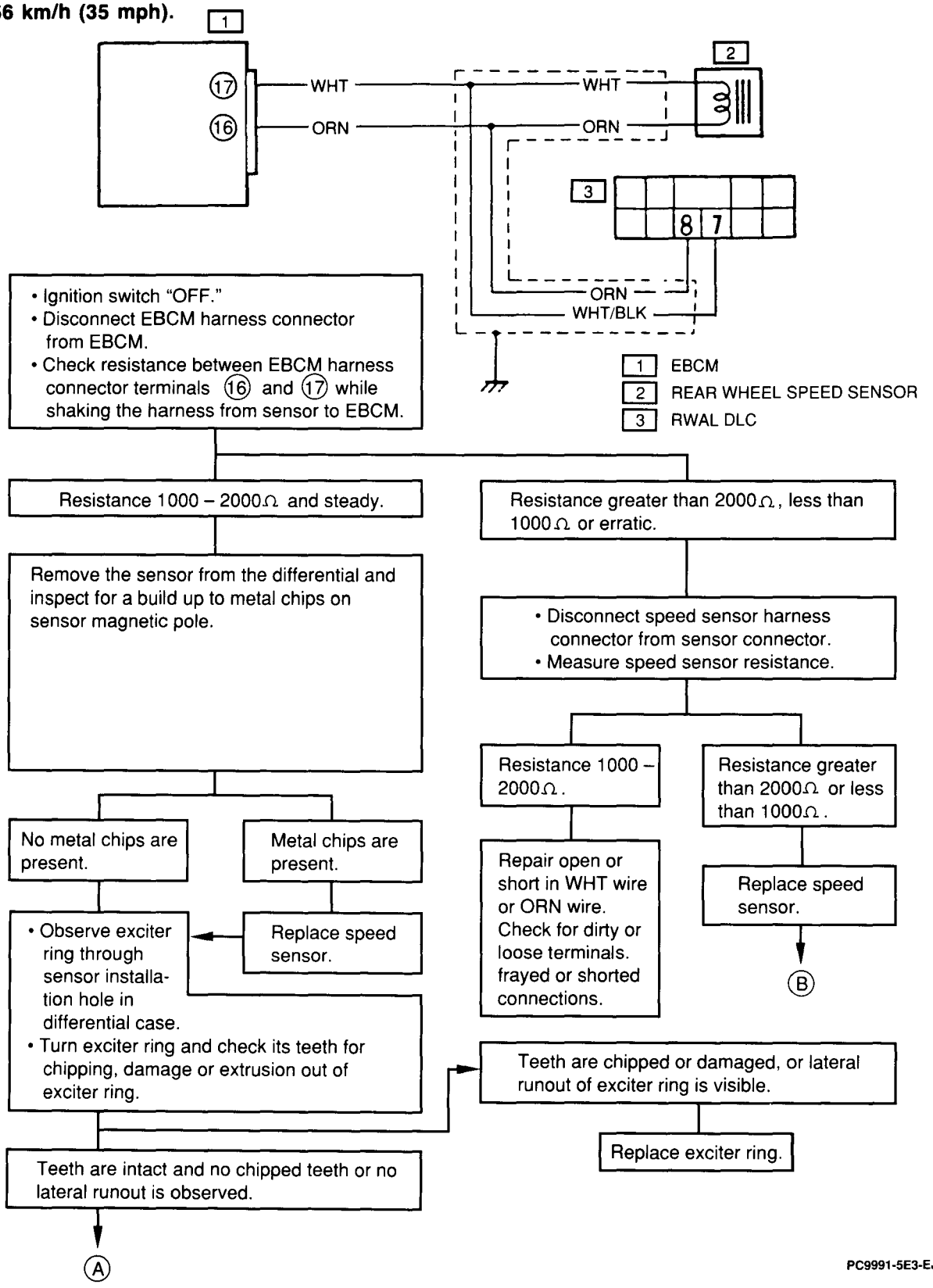

Figure 12 Diagnostic Trouble Code 6 — 1 of 2

DIAGNOSTIC TROUBLE CODE 6 (CONTINUED)

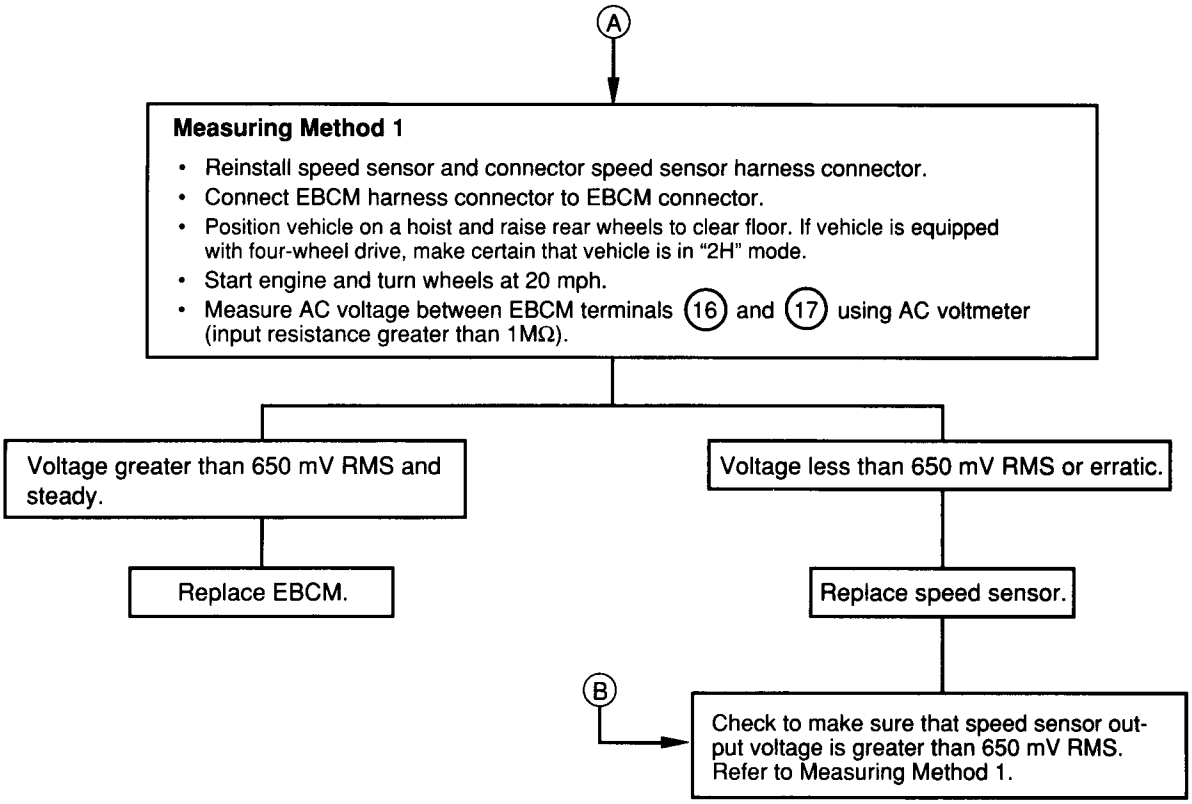

NC9984-5E2-JT-RS

Figure 13 Diagnostic Trouble Code 6 — 2 of 2

DIAGNOSTIC TROUBLE CODE 7

Shorted isolation solenoid circuit

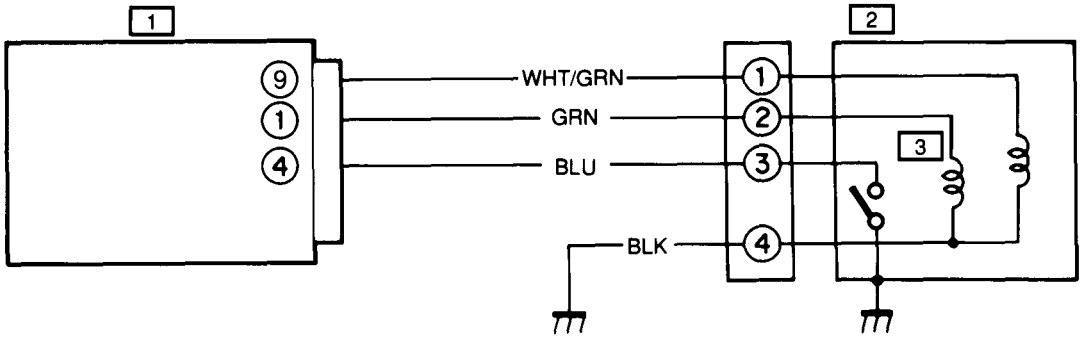

1 EBCM
2 PRESSURE LIMITING VALVE
3 ISOLATION VALVE SOLENOID

- Ignition switch "OFF."
- Disconnect pressure limiting valve harness connector.
- Measure resistance between valve connector terminals (2) and (4) (valve side).

Resistance 3 – 6Ω.

- Disconnect EBCM harness connector from EBCM.
- Measure resistance between EBCM harness connector terminal (1) and chassis ground.

Resistance greater than 20kΩ.

Replace EBCM.

Resistance less than 20kΩ.

Repair short to ground in harness GRN wire.

Resistance less than 3Ω.

Replace pressure limiting valve.

NC9990-5E2-JT-RS

Figure 14 Diagnostic Trouble Code 7

DIAGNOSTIC TROUBLE CODE 8

Shorted dump solenoid circuit

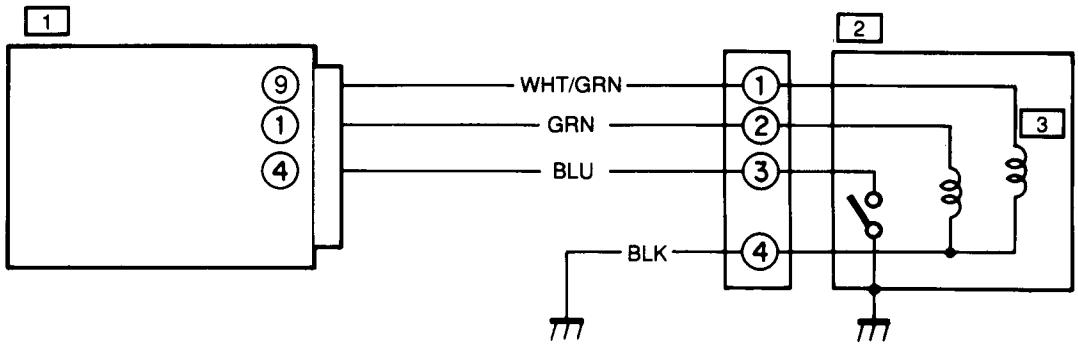

1 EBCM
2 PRESSURE LIMITING VALVE
3 DUMP VALVE SOLENOID

- Ignition switch "OFF."
- Disconnect pressure limiting valve harness connector.
- Measure resistance between valve connector terminals (1) and (4) (valve side).

Resistance 1 – 3Ω .

- Disconnect EBCM harness connector from EBCM.
- Measure resistance between EBCM harness connector terminal (9) and chassis ground.

Resistance greater than 20kΩ.

Replace EBCM.

Resistance less than 20kΩ.

Repair short to ground in harness WHT/GRN wire.

Resistance less than 1Ω .

Replace pressure limiting valve.

NC9989-5E2-JT-RS

Figure 15 Diagnostic Trouble Code 8

DIAGNOSTIC TROUBLE CODE 9

Open rear wheel speed sensor circuit

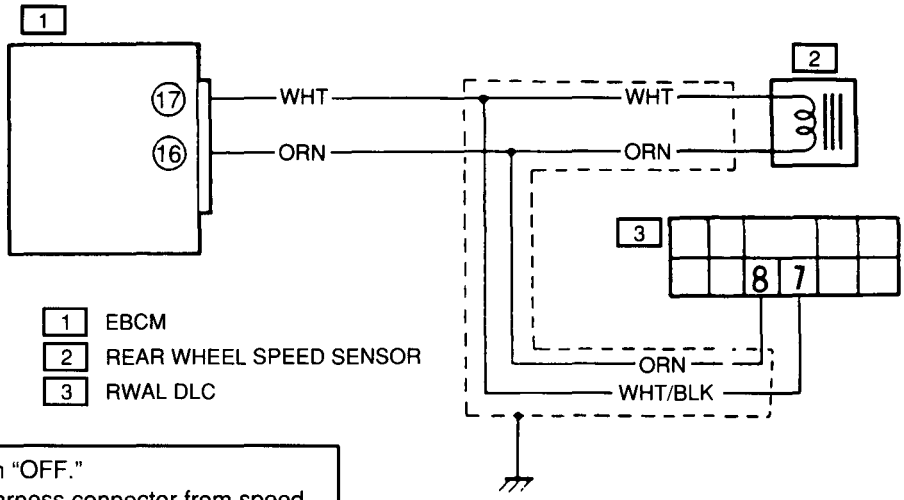

1 EBCM
2 REAR WHEEL SPEED SENSOR
3 RWAL DLC

- Ignition switch "OFF."
- Disconnect harness connector from speed sensor.
- Measure speed sensor resistance.

Resistance 1000 – 2000Ω .

- Disconnect EBCM harness connector from EBCM.
- Connect harness connector to speed sensor.
- Measure resistance between EBCM harness connector terminals (16) and (17).

Resistance 1000 – 2000Ω .

Replace EBCM.

Resistance greater than 2000Ω .

Repair open in speed sensor wiring.

Resistance greater than 2000Ω .

Replace speed sensor.

PC9988-5E3-EJ-RS

Figure 16 Diagnostic Trouble Code 9

DIAGNOSTIC TROUBLE CODE 10

Stoplamp switch remains closed. This condition is detected only while driving at higher than 60 km/h (38 mph).

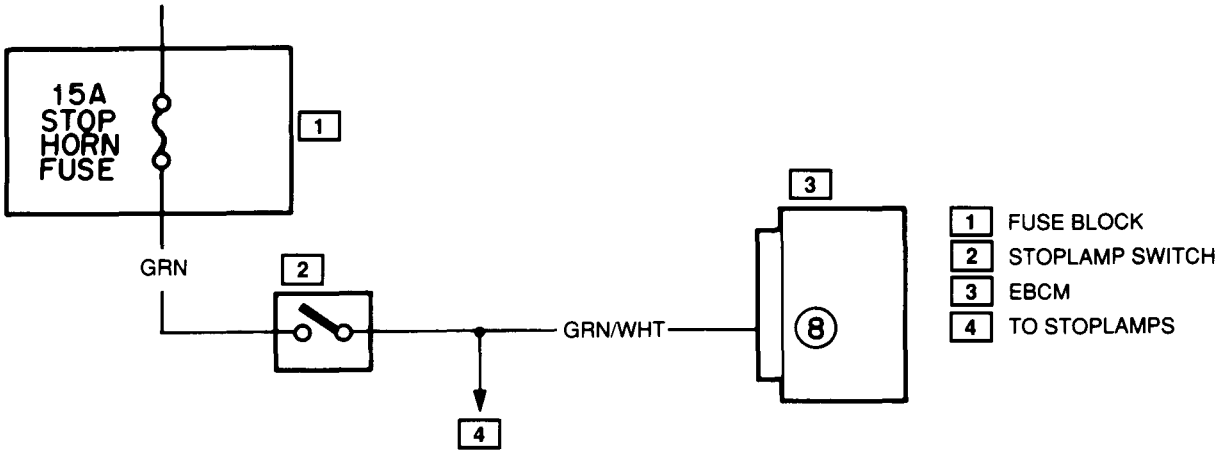

- Ignition switch "OFF."
- Disconnect EBCM harness connector from EBCM.
- Ignition switch "ON."
- Measure voltage between EBCM harness connector terminal (8) and chassis ground.

Voltage 10 – 15V.

Replace/adjust stoplamp switch or repair short to voltage in GRN/WHT wire.

Voltage less than 10V.

Replace EBCM.

NC9987-5E2-JT-RS

Figure 17 Diagnostic Trouble Code 10

DIAGNOSTIC TROUBLE CODE 11

Shorted rear wheel speed sensor circuit

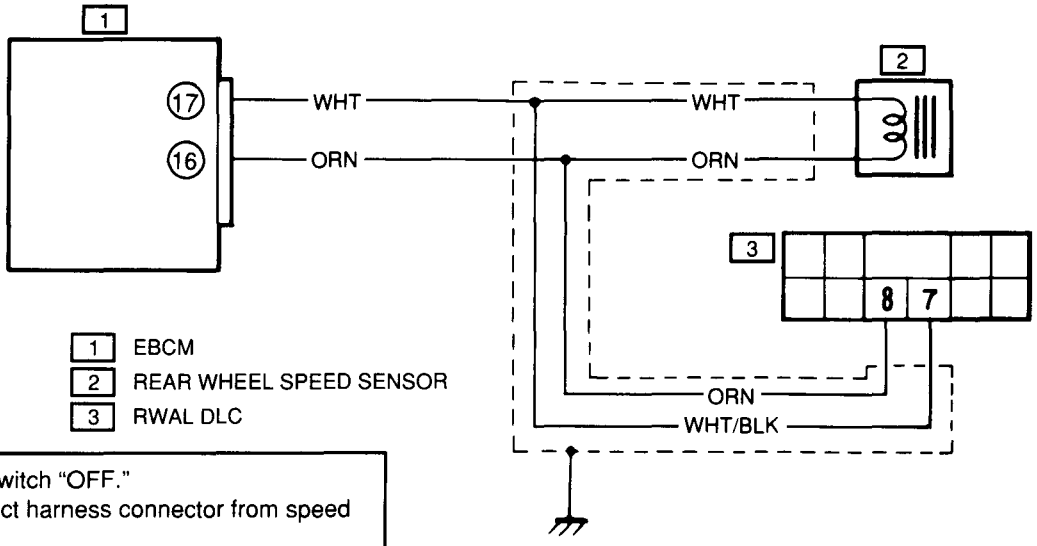

1 EBCM
2 REAR WHEEL SPEED SENSOR
3 RWAL DLC

- Ignition switch "OFF."
- Disconnect harness connector from speed sensor.
- Measure speed sensor resistance.

Resistance 1000 – 2000Ω .

Resistance less than 1000Ω .

Replace speed sensor.

- Disconnect EBCM harness connector from EBCM.
- Measure resistance between EBCM harness connector terminal ⑯ and chassis ground.

Resistance greater than 20kΩ .

Resistance less than 20kΩ .

Repair short to ground in ORN wire.

Measure resistance between EBCM harness connector terminals ⑯ and ⑰ .

Resistance greater than 20kΩ .

Resistance less than 20kΩ .

Replace EBCM.

Repair short between ORN wire and WHT wire.

PC9986-5E3-EJ-RS

Figure 18 Diagnostic Trouble Code 11

DIAGNOSTIC TROUBLE CODE 13

EBCM malfunction.

Replace EBCM.

NC9985-5E2-JT-RS

Figure 19 Diagnostic Trouble Code 13

MANUAL RWAL BRAKE SYSTEM CIRCUIT CHECK

If a manual electrical check of the RWAL Brake System is preferred, all voltage values can be measured by backprobing the EBCM connector with a J 34029-A digital multimeter (Figure 20). Normal voltage values can be found in the RWAL Brake System Voltage Chart (Figure 21).

NOTICE: Never attempt to test the EBCM in any way with any type of electrical tester while the EBCM connector is disconnected. Even the small amount of current used by a digital multimeter to test resistance can cause serious damage to the internal electronic components of the EBCM.

Important

- Make certain that battery voltage at EBCM terminals 10 and 12 is at least 11 volts before attempting to proceed with the manual RWAL brake system circuit check.

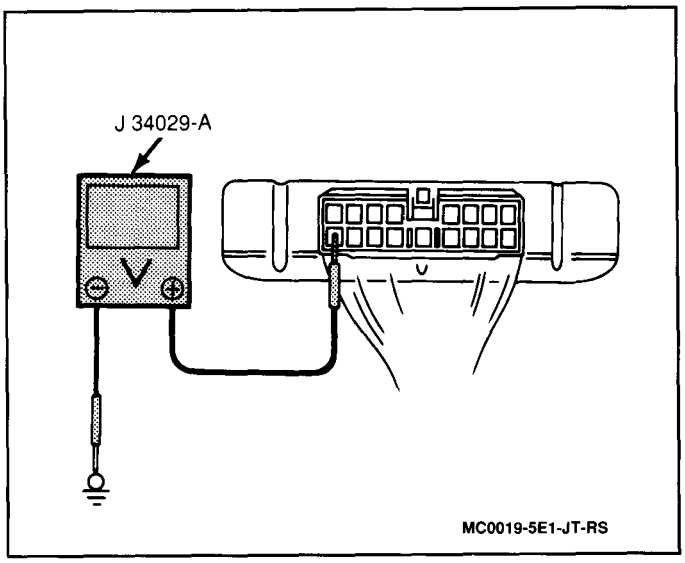

Figure 20 Backprobing EBCM

TER-MINAL	CIRCUIT	NORMAL VOLTAGE	CONDITION
1	Isolation valve solenoid	0V (10 - 15V)	During normal driving (When hard brake is applied during driving)
2	"BRAKE" warning lamp	10 - 15V 0 - 3V	When "BRAKE" warning lamp is OFF When "BRAKE" warning lamp is ON
3	4WD signal	10 - 15V 0 - 0.5V	In 2WD setting In 4WD setting
4	Valve reset switch	4 - 5V (0 - 0.5V)	During normal driving (When hard brake is applied during driving)
5	———	———	———
6	———	———	———
7	Diagnostic test terminal	3 - 5V 0 - 0.5V	When diagnostic test terminal is open When diagnostic test terminal is grounded
8	Stoplamp switch	0 - 0.5V 10 - 15V	When no brake is applied When brake is applied
9	Dump valve solenoid	0V	During normal driving
10	Power source (battery)	10 - 15	Normal condition
12	Power source (ignition)	10 - 15V	When ignition switch is "ON"
15	EBCM ground	0V	Normal condition
16 – 17	Rear wheel speed sensor	About 3.5V (AC)	When driving at about 20 mph

NC0020-5E1-JT-RS

Figure 21 RWAL Brake System Voltage Chart

SPECIAL TOOLS

1
J 34029-A

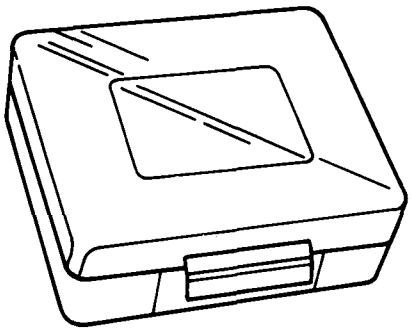

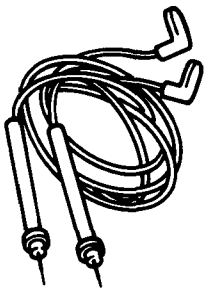

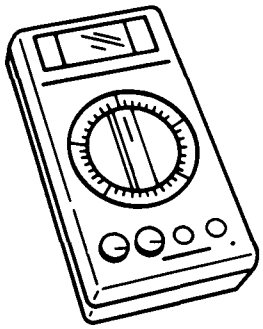

1 HIGH IMPEDANCE DIGITAL MULTIMETER

KC0003-6D1-MS-RS

SECTION 5F

PARKING BRAKE

NOTICE: When fasteners are removed, always reinstall them at the same location from which they were removed. If a fastener needs to be replaced, use the correct part number fastener for that application. If the correct part number fastener is not available, a fastener of equal size and strength (or stronger) may be used. Fasteners that are not reused, and those requiring thread-locking compound, will be called out. The correct torque values must be used when installing fasteners that require them. If the above procedures are not followed, parts or system damage could result.

CONTENTS

General Description 5F-1
Lever 5F-2
Cable System 5F-2
"BRAKE" Indicator 5F-2
Parking Brake Switch 5F-2
Mechanical Apply Components 5F-2
Diagnosis 5F-3
On-Vehicle Service 5F-3
Lubrication 5F-3
Lever 5F-3
Cables 5F-4
Adjustment 5F-5
Indicator 5F-5
Unit Repair 5F-5
Drum Refinishing 5F-5
Specifications 5F-6
General Specifications 5F-6
Fastener Tightening Specifications 5F-6
Service Parts Information 5F-6

GENERAL DESCRIPTION

The parking brake is lever activated, cable applied and forces the brake shoes against the brake drum through the use of springs and a parking brake shoe lever.

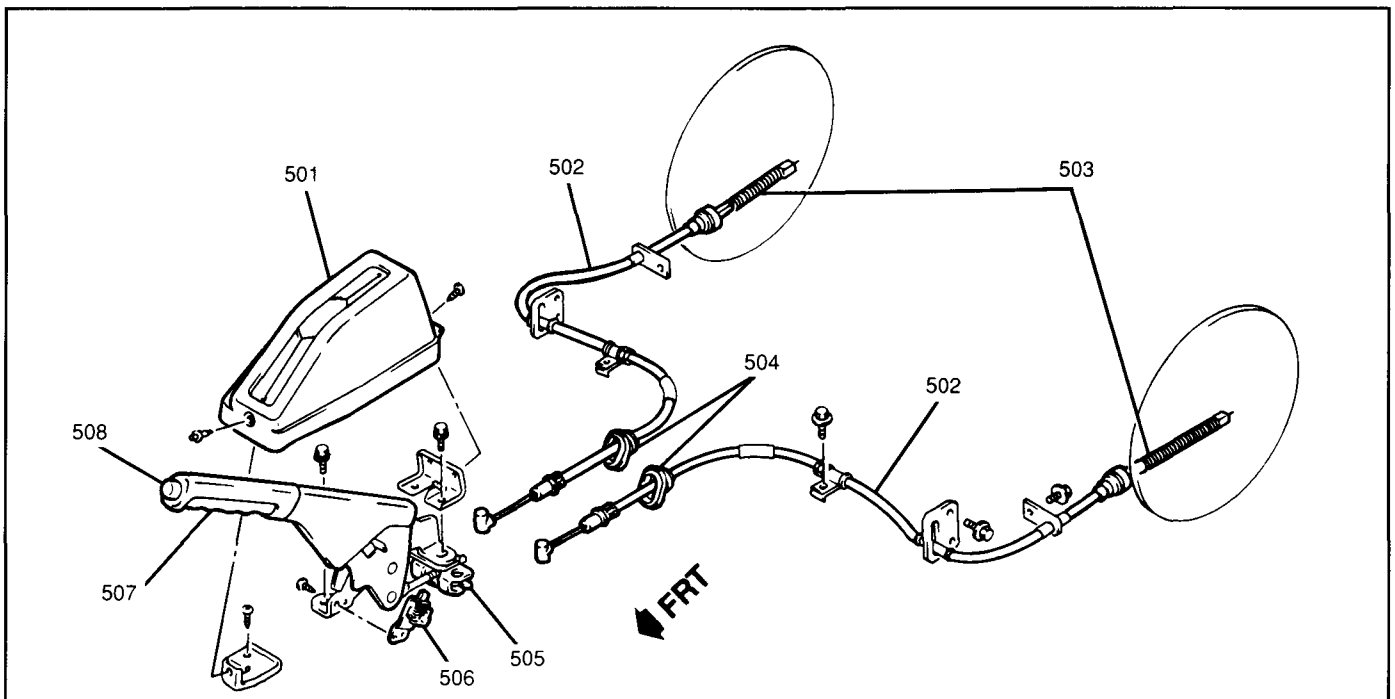

501 PARKING BRAKE LEVER COVER
502 PARKING BRAKE CABLE
503 PARKING BRAKE CABLE SPRING
504 GROMMET
505 EQUALIZER
506 PARKING BRAKE SWITCH
507 PARKING BRAKE LEVER
508 RELEASE BUTTON

PC1101-5F-EJ-RS

Figure 1 Parking Brake Assembly

LEVER

Figure 2

This mechanical parking brake assembly is activated by pulling up on the parking brake lever (Figure 2). This engages the parking brake through the parking brake cables. To release the parking brake, the parking brake lever must be gently pulled upward and the release button (on the top end of the lever) pushed in. This moves the pawl back, disengaging the teeth and allowing the lever to be lowered into the released position. This action releases the tension in the cables and the brake shoes.

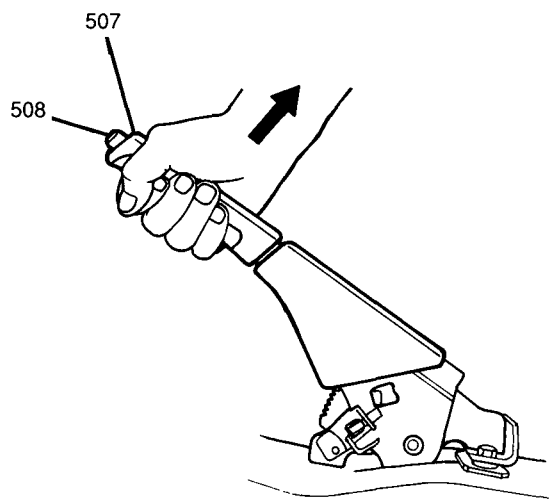

507 PARKING BRAKE LEVER
508 RELEASE BUTTON

PC1102-5F-EJ-RS

Figure 2 Applying Parking Brake

CABLE SYSTEM

The twisted strand parking brake cables are covered by a plastic material which allows the cables to slide more freely. The cables run from the parking brake lever to both brake drums. The cables are connected to the lever by means of an equalizer. This equalizer ensures that braking tension is applied to both brake drums at the same time and with the same amount of pressure. The cable is secured to the underbody of the vehicle by protectors on the trailing rod, frame and crossmember.

"BRAKE" INDICATOR

The "BRAKE" indicator acts as a warning of problems in the brake system which may result in reduced braking capability. If the brake fluid level switch in the master cylinder closes due to low brake fluid level or one of the wheels loses brake fluid pressure, the indicator will illuminate to warn of a problem which needs immediate attention.

If the "BRAKE" indicator illuminates, the parking brake is released and the brake fluid level is correct, a problem has developed in the rear wheel antilock (RWAL) brake system. The "BRAKE" indicator illuminates to notify the driver that the RWAL brake system is not functioning. Normal braking functions remain operational. For repair procedures of the RWAL brake system, refer to SECTION 5E. RWAL brake system diagnosis is located in SECTION 5E3.

The "BRAKE" indicator also will illuminate when the ignition switch is initially turned to the "ON" position prior to starting the engine. This is to indicate that the circuit is operational. If the ignition switch is in the "ON" position and the parking brake lever pulled up (parking brake switch closed) the indicator acts as a reminder to the driver that the parking brake is applied.

PARKING BRAKE SWITCH

The parking brake switch is mounted to the parking brake lever. The switch is open with the parking brake released. When the parking brake lever is pulled up, the switch closes, illuminating the "BRAKE" indicator. For parking brake switch diagnosis, refer to SECTION 8A.

MECHANICAL APPLY COMPONENTS

Figures 2, 3 and 4

When the parking brake lever is pulled up, the lower end swivels forward pulling the connecting rod (Figures 2 and 3). The equalizer (attached to the other end of the connecting rod) applies equal force to both parking brake cables (Figure 4). The cables, in turn, pull on the parking brake shoe levers in both brake drums. The swivel of the brake shoe lever pushes the rear (trailing) brake shoe against the drum, preventing the wheel and tire assembly from turning.

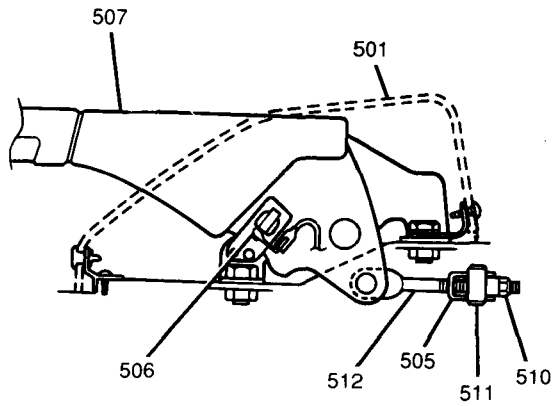

501 PARKING BRAKE LEVER COVER
505 EQUALIZER
506 PARKING BRAKE SWITCH
507 PARKING BRAKE LEVER
510 PARKING BRAKE CABLE LOCKNUT
511 SPACER
512 CONNECTING ROD

PC1103-5F-EJ-RS

Figure 3 Parking Brake Lever Assembly

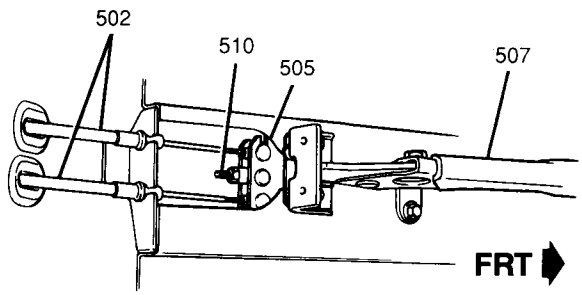

502 PARKING BRAKE CABLES
505 EQUALIZER
507 PARKING BRAKE LEVER
510 PARKING BRAKE CABLE LOCKNUT
PC1104-5F-EJ-RS

Figure 4 Parking Brake Equalizer

DIAGNOSIS

The parking brake assembly is designed to be completely applied before the parking brake lever completes its maximum travel. Approximately seven to nine "clicks" with 20 kg. (44 lbs.) of force should be audible before the lever reaches its maximum pull (parking brake is fully engaged). If the lever travel is outside of this range, the parking brake must be adjusted; refer to "Adjustment" later in this section.

If the parking brake is applied and cannot be released, look for any of the following:

- Corroded or "frozen" cable(s).
- Stuck brake shoe(s).
- Broken or binding cable guide(s).
- Malfunctioning release button.

If the parking brake lever moves freely through its entire range without resistance and without applying the parking brake, look for any of the following causes:

- Missing locknut from the equalizer.
- Parking brake cable(s) broken.
- Parking brake cable(s) disconnected at parking brake lever(s).

If the parking brake lever moves freely through its entire range with normal resistance but without applying the parking brake, listen for the "clicks" indicating the pawl is being engaged. If none are heard, the pawl assembly is broken and the lever must be replaced; refer to "Lever" later in this section. If "clicks" are heard, the parking brake is out of adjustment. For adjustment procedures, refer to "Adjustment" later in this section.

ON-VEHICLE SERVICE

LUBRICATION

The parking brake cables are encased in a plastic material which protects the cables from dirt or corrosion.

Important

- Plastic coated parking brake cables do not need lubrication.

Handling of these cables during servicing of the parking brake system requires a little extra care. Damage to the plastic coating will reduce corrosion protection and increased parking brake effort could result. Contact of the coating with sharp-edged tools or contact with sharp surfaces of the vehicle underbody should be avoided.

LEVER

Figure 5

Remove or Disconnect

1. Negative (-) battery cable.
2. Two screws, one clip and parking brake lever cover from vehicle.
3. Parking brake switch electrical connector.
4. Parking brake cable locknut and spacer (Figure 5).
5. Two bolts and parking brake lever cover bracket from parking brake lever.
6. One bolt, disengage parking brake connecting rod from equalizer and remove parking brake lever from vehicle.

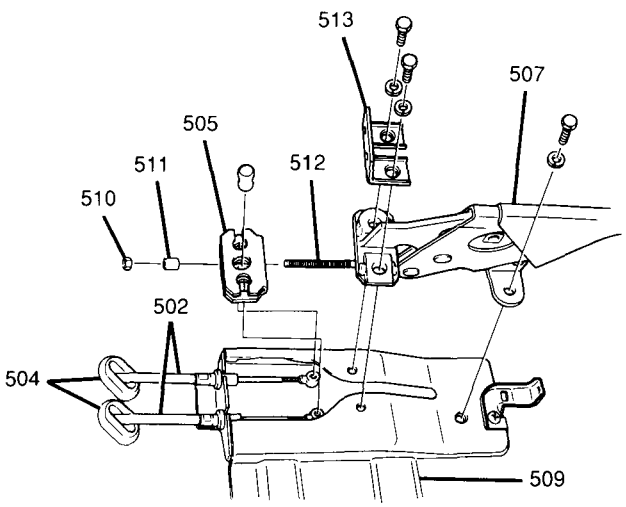

502 PARKING BRAKE CABLES
504 GROMMETS
505 EQUALIZER
507 PARKING BRAKE LEVER
509 VEHICLE FLOOR
510 PARKING BRAKE CABLE LOCKNUT
511 SPACER
512 CONNECTING ROD
513 PARKING BRAKE LEVER COVER BRACKET

PC1105-5F-EJ-RS

Figure 5 Parking Brake Lever

Install or Connect

1. Parking brake lever to vehicle, engaging connecting rod to equalizer; secure lever with parking brake lever cover bracket and three bolts.

Tighten

- Parking brake lever bolts to 16 N·m (12 lb.ft.).

2. Parking brake cable spacer and locknut to parking brake lever. Do not tighten fully.
3. Parking brake switch electrical connector.

- Adjust parking brake. Refer to "Adjustment" later in this section.

4. Parking brake lever cover; secure with two screws and one clip.
5. Negative (-) battery cable.

Tighten

- Negative (-) battery cable-to-negative (-) battery terminal retainer to 15 N·m (11 lb.ft.).

CABLES

Figures 1 and 6 through 8

Remove or Disconnect

1. Two screws, one clip and parking brake lever cover from vehicle.
2. Parking brake cable locknut and spacer.
3. Connecting rod from equalizer.
4. Parking brake cable from equalizer.

- Raise and suitably support vehicle. Refer to SECTION 0A.

5. Rear tire and wheel assembly. Refer to SECTION 3E.
6. Brake drum and brake shoes. Refer to SECTION 5C1.
7. Parking brake cable from parking brake shoe lever (Figure 6).

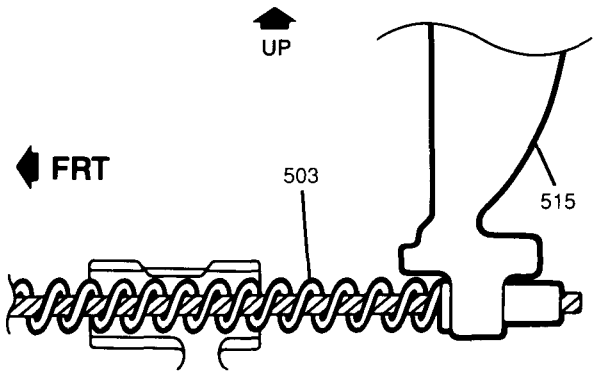

503 PARKING BRAKE CABLE SPRING
515 PARKING BRAKE SHOE LEVER

PC1106-5F-EJ-RS

Figure 6 Parking Brake Cable at Parking Brake Shoe Lever

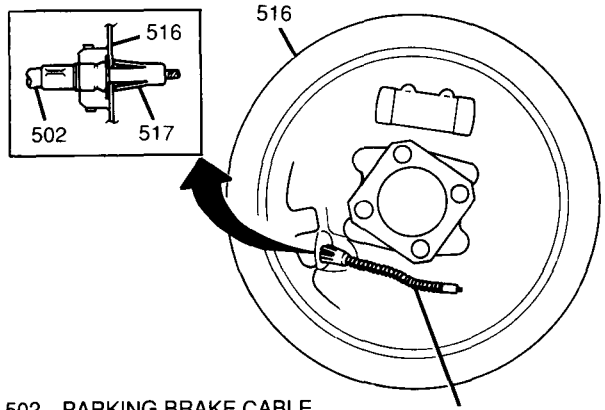

502 PARKING BRAKE CABLE
516 BACKING PLATE
517 CABLE STOPPER RING

PC1107-5F-EJ-RS

Figure 7 Parking Brake Cable at Backing Plate

8. Cable stopper ring and parking brake cable from brake backing plate (Figure 7).
9. Four bolts and parking brake cable from protectors on trailing rod, frame and crossmember.
10. Parking brake cable and grommet from floor (Figure 8).

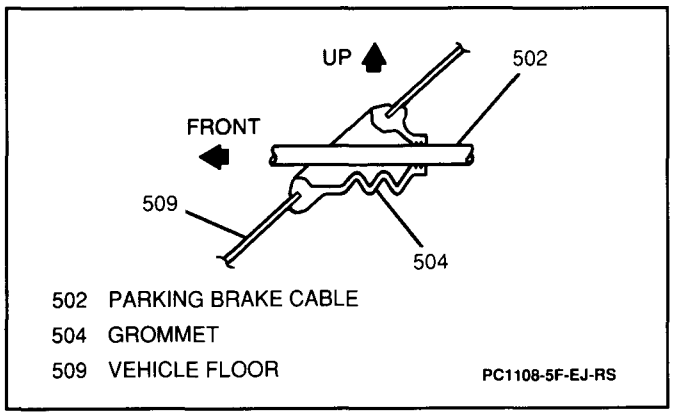

Figure 8 Parking Brake Cable Grommet

Important

- White ring at rear end of parking brake cable identifies left-hand cable.

Install or Connect

1. Parking brake cable to protectors on trailing rod, frame and crossmember. Secure with four bolts.

Tighten

- Protector bolts to 10 N·m (89 lb.in.).

2. Parking brake cable and grommet to floor.
3. Parking brake cable to backing plate; secure with cable stopper ring.
4. Parking brake cable to parking brake shoe lever.
5. Brake shoes and brake drum. Refer to SECTION 5C1.
6. Rear wheel and tire assembly. Refer to SECTION 3E.
- Lower vehicle.
7. Parking brake cable to equalizer.
8. Equalizer to connecting rod; secure with spacer and locknut. Do not tighten fully.
- Adjust parking brake. Refer to "Adjustment" later in this section.
9. Parking brake lever cover to vehicle; secure with two screws and one clip.

ADJUSTMENT

Figure 2

Adjust

Important

- Ensure the following conditions are met before cable adjustment.
  A. No air is trapped in brake system.
  B. Brake pedal travel is within specifications.
  C. Brake pedal has been depressed a few times with about 30 kg (66 lbs.) load.
  D. Parking brake lever has been pulled up a few times with about 20 kg (44 lbs.) force and completely released.
  E. Rear brake shoes are not worn beyond limit and self-adjusting mechanism operates properly.
- Loosen or tighten locknut to adjust parking brake lever until parking brake is applied with between 7 to 9 clicks on parking brake lever with about 20 kg (44 lbs.) force (Figure 2).

INDICATOR

Refer to SECTION 8C for "BRAKE" indicator bulb replacement procedures.

UNIT REPAIR

DRUM REFINISHING

For procedures and specifications on refinishing brake drums, refer to SECTION 5C1.

SPECIFICATIONS

GENERAL SPECIFICATIONS

Brake Lever Adjustment ..... 7 to 9 "clicks" with about 20 kg (44 lbs.) force

FASTENER TIGHTENING SPECIFICATIONS

Parking Brake Lever Bolts ..... 16 N·m (12 lb.ft.)
Protector Bolts ..... 10 N·m (89 lb.in.)
Negative (-) Battery Cable-to-Negative (-) Battery Terminal Retainer ..... 15 N·m (11 lb.ft.)

SERVICE PARTS INFORMATION

Component Name Used in Section 5F	Reference Name in Service Parts Catalog	Group Number
Parking Brake Lever	Lever, Park Brake	4.591
Parking Brake Cable	Cable, Park Brake	4.779
Parking Brake Switch	Switch, Park Brake	4.589
Parking Brake Lever Cover	Cover, Park Brake Lever	4.612

SECTION 6

Engine

CONTENTS

Engine General Information and Mechanical Diagnosis 6-1
Engine Mechanical — 1.6 Liter L4 VIN Code U 6A1-1
Cooling and Radiator 6B-1
Engine Fuel 6C-1
Engine Electrical 6D-1
Battery 6D1-1
Cranking System 6D2-1
Charging System 6D3-1
Ignition System 6D4-1
Engine Wiring 6D5-1
Driveability and Emissions General Information 6E-1
Driveability and Emissions Fuel Injection (TBI) 6E2-1
Exhaust System 6F-1

Geo

SECTION 6

ENGINE GENERAL INFORMATION AND MECHANICAL DIAGNOSIS

NOTICE: When fasteners are removed, always reinstall them at the same location from which they were removed. If a fastener needs to be replaced, use the correct part number fastener for that application. If the correct part number fastener is not available, a fastener of equal size and strength (or stronger) may be used. Fasteners that are not reused, and those requiring thread-locking compound, will be called out. The correct torque values must be used when installing fasteners that require them. If the above procedures are not followed, parts or system damage could result.

CONTENTS

Description of Section 6 6-1
Section 6A1 — Engine Mechanical — 1.6 Liter L4 VIN Code U 6-1
Section 6B — Cooling and Radiator 6-1
Section 6C — Engine Fuel 6-1
Section 6D — Engine Electrical 6-1
Section 6E — Driveability and Emissions 6-1
Section 6F — Exhaust System 6-2
General Information 6-2
Cleanliness and Care 6-2
General Description of Engine Service 6-2
Engine Performance Diagnosis 6-2
Engine Mechanical Diagnosis 6-2
Excessive Oil Loss 6-2
Oil Leak Diagnosis 6-3
Finding the Leak 6-3
Repairing the Leak 6-3
Low or No Oil Pressure 6-3
Engine Noise Diagnosis 6-4
Main Bearing Noise 6-4
Connecting Rod Bearing Noise 6-4
Timing Belt and Sprocket Noise 6-4
Piston Noise 6-4
Valve Mechanism or Valve Train Noise 6-4
Flywheel Noise (Automatic Transmission) 6-5
Engine Knock Diagnosis 6-5
Knocks Cold and Continues for Two to Three Minutes and Increases with Torque 6-5
Heavy Knock with Torque Applied 6-5
Light Knock Hot 6-5
Knocks on Initial Start-Up But Only Lasts a Few Seconds 6-5
Knocks at Idle Hot 6-5
Engine Tests 6-5
Compression Test 6-5
Vacuum Test 6-7
Oil Pressure Test 6-7
Specifications 6-8
Fastener Torques 6-8
General Engine Specifications 6-8
Special Tools 6-9

DESCRIPTION OF SECTION 6

SECTION 6A1 — ENGINE MECHANICAL — 1.6L LITER L4 VIN CODE U

This section contains information about the mechanical parts of the engine, such as the block, crankshaft, pistons, valve train and camshafts. Overhaul procedures, removal and replacement procedures and specifications are also covered.

SECTION 6B — COOLING AND RADIATOR

Engine cooling system components, such as the radiator, coolant pump, thermostat, cooling fan and accessory drive belts are covered in this section. Cooling system capacities and specifications are also found here.

SECTION 6C — ENGINE FUEL

This section contains information about the fuel tank, fuel pump and fuel pipes. The throttle body fuel injection (TBI) unit is not discussed in this section.

SECTION 6D — ENGINE ELECTRICAL

Items covered in this section are the battery, generator, starter, engine wiring harness, spark plugs and wires.

Specific subsections are:
6D — Engine Electrical
6D1 — Battery
6D2 — Cranking System
6D3 — Charging System
6D4 — Ignition System
6D5 — Engine Wiring

SECTION 6E — DRIVEABILITY AND EMISSIONS

This section describes the function and operation of the electronic engine control system that regulates the driveability and emissions of the vehicle. This section also contains general diagnostic procedures which will assist in repairing driveability-related problems. Instructions on the use of special tools are also given.

Specific subsections are:
6E — Driveability and Emissions General Information
6E2 — Driveability and Emissions Fuel Injection (TBI)

SECTION 6F — EXHAUST SYSTEM

This section has information about all exhaust system parts, such as tail pipes, the muffler and the three way catalytic converter (TWC).

GENERAL INFORMATION

CLEANLINESS AND CARE

An automobile engine is a combination of many machined, honed, polished and lapped surfaces with tolerances that are measured in the ten-thousandths of an inch. When internal engine parts are serviced, care and cleanliness are important. A liberal coating of engine oil should be applied to friction areas during assembly to protect and lubricate the surfaces on initial operation. Throughout this section, it should be understood that proper cleaning and protection of machined surfaces and friction areas are important even if they are not specifically stated.

Whenever valve train components are removed for service, they should be kept in order of location. They should be installed in the same locations, and with the same mating surfaces as when removed.

Battery cables should be disconnected before any major work is performed on the engine. Failure to disconnect cables may result in damage to the wiring harness or other electrical parts.

GENERAL DESCRIPTION OF ENGINE SERVICE

Figure 1

Important

- THE FOLLOWING INFORMATION ON ENGINE SERVICE SHOULD BE NOTED CAREFULLY, AS IT IS IMPORTANT IN PREVENTING DAMAGE AND IN CONTRIBUTING TO RELIABLE ENGINE PERFORMANCE.

When raising or supporting the engine for any reason, do not use a jack under the oil pan. Due to the small clearance between the oil pan and the oil pump screen, jacking against the oil pan may cause it to be bent against the pump screen resulting in a damaged oil pickup unit.

When working on the engine, remember that the 12-volt electrical system is capable of causing short circuits. When performing any work where electrical terminals could possibly be grounded, the negative (-) battery cable should be disconnected at the battery. SHOULD IT BECOME NECESSARY TO REMOVE ANY SUCH ITEM TO PERFORM OTHER SERVICE, REFER TO THE APPROPRIATE SECTION OF THIS SERVICE MANUAL FOR SPECIFIC INFORMATION.

Throughout this manual, the four cylinders of the engine are identified by numbers: No. 1, No. 2, No. 3 and No. 4 as counted from the crankshaft pulley side to the flywheel side of the engine (Figure 1).

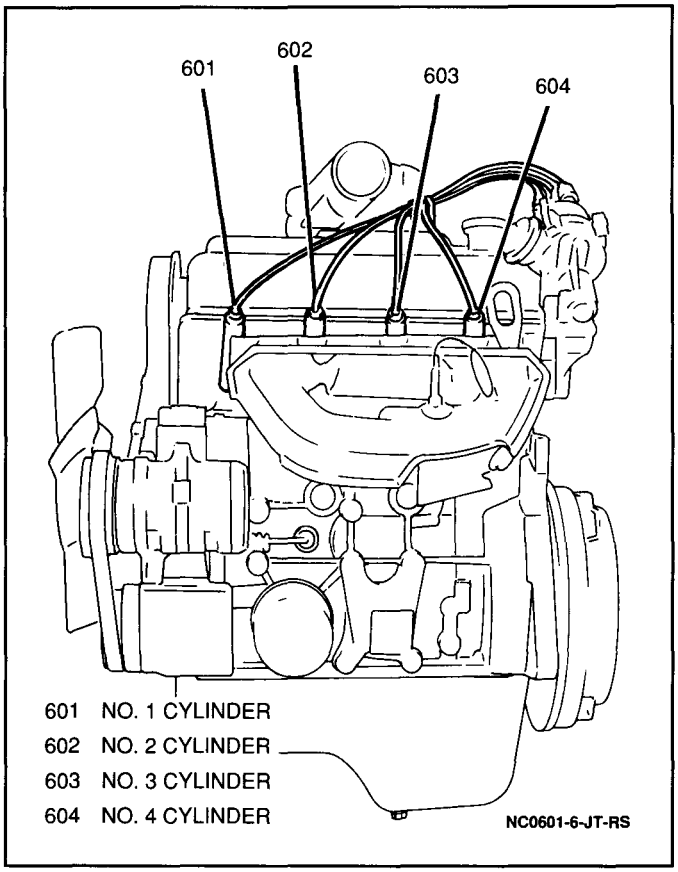

Figure 1 Engine Cylinder Numbering

ENGINE PERFORMANCE DIAGNOSIS

Engine performance diagnosis procedures are covered in SECTION 6E and should be consulted for diagnosis of any driveability, emissions or malfunction indicator lamp (MIL) ("CHECK ENGINE") complaint.

ENGINE MECHANICAL DIAGNOSIS

The following diagnostic information covers common problems and possible causes. When the proper diagnosis is made, the problem should be corrected by adjustment, repair or part replacement as required. Refer to the appropriate section of this service manual for these procedures.

EXCESSIVE OIL LOSS

Excessive oil consumption not due to leaks can be defined as the use of 1.9 liters (2 quarts) of engine oil within 3 200 km (2,000 miles).

- External oil leaks. Tighten bolts and/or replace gaskets and seals as necessary.
- Improper reading of oil level indicator (dipstick). Check oil with vehicle on a level surface and allow adequate drain-down time.
- Improper oil viscosity. Use recommended SAE viscosity for prevailing temperatures. Refer to SECTION 0B for engine oil specifications.

- Continuous high speed driving and/or severe usage, such as trailer hauling, will normally cause decreased oil mileage.
- Crankcase ventilation system is malfunctioning.
- Valve guides and/or valve stem seals are worn or seals were omitted. Ream guides and install oversize service valves and/or new valve stem seals.
- Piston rings are broken, were improperly installed, are worn or are not seated. Replace broken or worn rings as necessary.
- Piston was improperly installed or was misfitted.

OIL LEAK DIAGNOSIS

Most fluid leaks are easily located and repaired by visually finding the leak and replacing or repairing the necessary parts. On some occasions a fluid leak may be difficult to locate or repair. The following procedure may help in locating and repairing most leaks.

Finding the Leak

1. Identify the fluid; determine whether it is engine oil, automatic transmission fluid, power steering fluid, etc.
2. At what point is the fluid leaking from? After running the vehicle at normal operating temperature, park the vehicle over a large sheet of paper. After a few minutes, the approximate location of the leak should be found by the drippings on the paper.
3. Visually check around the suspected component. Check around all gasket mating surfaces for leaks. A mirror is useful for finding leaks in areas that are hard to reach.
4. If the leak still cannot be found, it may be necessary to clean the suspected area with a degreaser, steam or spray solvent. Clean the area well, then dry thoroughly. Operate the vehicle for several miles at normal operating temperature and varying speeds, taking care never to exceed legal speed limits. After operating the vehicle, visually check the suspected component. If the leak still cannot be located, try using the following powder or black light methods.

Powder Method

1. Clean the suspected area.
2. Apply an aerosol-type powder (such as foot powder) to the suspected area.
3. Operate the vehicle under normal operating conditions.
4. Visually inspect the suspected component. The leak path to the source can be found by following the white powder surface.

Black Light and Dye Method

Tools Required:
J 28428-D High Intensity Black Light
J 28431-6 Fluorescent Oil Additive

Oil leaks may be found using a J 28431-6 and a J 28428-D. For best results, follow the manufacturer's instructions included with the J 28431-6.

1. Pour the specified amount of J 28431-6 into the leaking component. Refer to the manufacturer's instructions for the proper amount of oil additive.
2. Operate the vehicle under normal operating conditions.
3. Direct the J 28428-D toward the suspected area. The J 28431-6 will appear as a yellow path leading to the source of the oil leak.

Repairing the Leak

Once the origin of the leak has been pinpointed and traced back to its source, the cause of the leak must be determined in order for it to be repaired properly. If a gasket is replaced, but the sealing flange is bent, the new gasket will not repair the leak. The bent flange must be repaired also. Before attempting to repair a leak, check to see if the following conditions exist as they may cause a leak.

Gaskets

Inspect

- Fluid level/pressure too high.
- Crankcase ventilation system malfunctioning.
- Improperly tightened fasteners or dirty/damaged threads.
- Warped flanges or sealing surface.
- Scratches, burrs or other damage to the sealing surface.
- Damaged or worn gasket.
- Cracking or porosity of the component.
- Improper sealant used (where applicable).

Seals

Inspect

- Fluid level/pressure too high.
- Crankcase ventilation system malfunctioning.
- Damaged seal bore (scratched, burred or nicked).
- Damaged or worn seal.
- Improper installation.
- Cracks in component.
- Shaft surface scratched, nicked or damaged.
- Loose or worn bearing causing excessive seal wear.

LOW OR NO OIL PRESSURE

- Low oil level. Fill to full mark on oil level indicator.
- Slow idle speed.
- Incorrect or malfunctioning oil pressure switch.
- Incorrect or malfunctioning oil pressure indicator.
- Improper oil viscosity or diluted oil. Install oil of proper viscosity for expected temperature or install new oil if diluted with moisture or unburned fuel mixture.
- Oil pump worn or dirty.
- Plugged oil filter.
- Oil pickup screen loose or plugged.
- Hole in oil pickup tube.
- Excessive bearing clearance. Replace if necessary.
- Cracked, porous or plugged oil galleries. Repair or replace block.
- Gallery plugs missing or misinstalled. Install plugs or repair as necessary.
- Camshaft worn, or poorly machined. Replace camshaft.
- Worn valve guides.

ENGINE NOISE DIAGNOSIS

There are four steps to diagnosing engine noise. The technician must determine:

- Type of noise.
- Under what operating conditions it exists.
- At what rate and at what location in the engine it occurs.
- Compare sounds in other engines to make sure the condition is not normal.

Remember, engine noises are generally synchronized to either engine speed (indicating noise is caused by the crankshaft or pistons) or one-half engine speed (indicating cause is in the valve train).

MAIN BEARING NOISE

Damaged or worn main bearing noise is revealed by dull thuds or knocks which happen on every engine revolution; this noise is loudest when the engine is under heavy load.

Excessive crankshaft end play is indicated by an intermittent rap or knock that is sharper than the sound of a worn main bearing. Causes of main bearing noises include:

- Low oil pump pressure.
- Thin, diluted or dirty oil and/or filter.
- Excessive main bearing clearance.
- Excessive crankshaft end play.
- Out-of-round crankshaft journals.
- Excessive belt tension.
- Loose crankshaft pulley.
- Loose flywheel or torque converter.
- Loose main bearing cap.

CONNECTING ROD BEARING NOISE

A damaged or worn connecting rod bearing will produce knock under all speeds. During the early stages of wear, connecting rod noise may be confused with piston slap or loose wrist pins. Connecting rod knock noise increases in volume with engine speed and is at its loudest on deceleration. Causes of connecting rod bearing noise include:

- Excessive bearing clearance.
- Worn crankshaft connecting rod journal.
- Thin, diluted or dirty oil and/or oil filter.
- Low oil pressure.
- Crankshaft connecting rod journals out-of-round.
- Misaligned connecting rod.
- Connecting rod bolts not properly torqued.
- Wrong bearing inserts or misaligned bearing half.

TIMING BELT AND SPROCKET NOISE

Engines designed with timing belts and sprockets can produce different noises. The most common noise is a high-frequency, light-knocking sound. This sound will generally be the same in intensity, whether the engine is idling, operating at high speeds or under load. Causes of timing belt and sprocket noises include:

- Worn timing belt.
- Misaligned sprockets.
- Damaged sprocket.
- Sprocket loose on shaft.
- Too much end play in the camshaft or crankshaft.

PISTON NOISE

Piston pin, piston and connecting rod noises are hard to separate. A loose piston pin causes a sharp double knock usually heard when the engine is idling, or during sudden acceleration then deceleration of the engine. A piston pin that has been improperly fitted will not load on the engine.

Excessive piston-to-cylinder bore clearance will cause piston slap noise. The noise is similar to a metallic knock, as if the piston were "slapping" the cylinder wall during its stroke. As with most engine noises, understanding the cause of the noise will help you imagine what the noise sounds like. An indication of piston slap is a decrease in noise as the engine warms up. When the engine is cold, the piston-to-cylinder bore clearance is greater and piston slap will be louder. Causes of piston noises include:

- Worn or loose piston pin or bushing.
- Improper fit of pin.
- Excessive piston-to-cylinder bore clearance (piston slap).
- Lack of lubrication.
- Carbon deposits on top of piston striking cylinder head.
- Worn or broken piston ring land.
- Broken or cracked piston.
- Misaligned connecting rods.
- Worn or damaged rings.
- Worn or out-of-round cylinder walls.
- Excessive ring land clearance.
- Insufficient ring-end gap clearance.
- Piston 180 degrees out of position.
- Incorrect piston cam grind.

VALVE MECHANISM OR VALVE TRAIN NOISE

A light tapping at one-half engine speed, or any varying frequency, can indicate a valve train problem. These tapping noises increase with engine speed.

Before attempting to evaluate valve train noises, thoroughly warm up the engine. This will bring all engine components to a normal state of expansion. Also, run the engine at various speeds and listen for engine noise with the hood closed while sitting in the driver's seat.

The causes of valve mechanism noises include:

- Broken or weak valve spring(s).
- Sticking or warped valves.
- Dirty, stuck, worn or defective valve lifters.
- Damaged or improperly machined camshaft lobes.
- Insufficient or poor oil supply to valve train (low oil pressure).
- Excessive valve stem-to-guide clearance.
- Worn valve guides.
- Worn rocker arms.
- Broken rocker arm stud.
- Loose or worn rocker arm attachments.

FLYWHEEL NOISE (AUTOMATIC TRANSMISSION)

A loose or cracked flywheel will produce an irregular thud or click. To test for a loose or cracked flywheel, operate the vehicle at approximately 32 km/h (20 mph) and shut off the engine. If a thud is heard, the flywheel may be loose or damaged. This type of thud is loudest on deceleration.

Loose torque converter-to-flywheel or flywheel-to-crankshaft bolts will sound similar to bearing knock. These conditions produce several raps during quick acceleration on a free running engine. Depending on the idle smoothness when the transaxle is in gear, the noise may or may not appear. Check the torque converter-to-flywheel and flywheel-to-crankshaft bolts before attempting to investigate any bearing-related knock.

NOTICE: Be sure the converter-to-flywheel bolts are not too long. Converter bolts that are too long may dimple the torque converter clutch apply surface causing a shudder condition.

ENGINE KNOCK DIAGNOSIS

Noises in engines are sometimes characteristic of the design. Compare the sounds of another engine of the same design to make sure the condition is not normal.

KNOCKS COLD AND CONTINUES FOR TWO TO THREE MINUTES AND INCREASES WITH TORQUE

- Flywheel contacting splash shield. Reposition splash shield.
- Loose or broken balancer or drive pulleys. Tighten or replace as necessary.
- Excessive piston-to-bore clearance. Replace piston.
- Bent connecting rod.
- Cold engine piston knock usually disappears when the cylinder is grounded out. Cold engine piston knock which disappears within 1.5 minutes after starting should be considered acceptable.

HEAVY KNOCK WITH TORQUE APPLIED

- Broken balancer or pulley hub. Replace parts as necessary.
- Loose torque converter bolts (automatic transaxle equipped vehicles).
- Accessory belts too tight or nicked. Replace and/or adjust tension to specifications as necessary.
- Exhaust system grounded. Reposition the exhaust system as necessary.
- Flywheel cracked.
- Excessive main bearing clearance. Replace as necessary.
- Excessive rod bearing clearance. Replace as necessary.

LIGHT KNOCK HOT

- Detonation or spark knock. Refer to SECTION 6E.
- Loose torque converter bolts (automatic transmission equipped vehicles).
- Exhaust leak at manifold. Tighten bolts and/or replace gasket.
- Excessive rod bearing clearance. Replace bearings as necessary.

KNOCKS ON INITIAL START-UP BUT ONLY LASTS A FEW SECONDS

- Improper oil viscosity. Install proper oil viscosity for expected temperatures. Refer to SECTION 0B for engine oil specifications.
- Hydraulic lifter bleed down. Clean, test and replace as necessary.
  - When the engine is stopped, some valves will be open. Spring pressure against lifters will tend to bleed lifter down. Attempts to repair should be made only if the problem is consistent.
  - An engine that is operated for only short periods between start-ups may have lifter noise that lasts for a few minutes. This is a normal condition.
- Excessive crankshaft end clearance. Replace crankshaft thrust bearing.
- Excessive front main bearing clearance. Replace worn parts.

KNOCKS AT IDLE HOT

- Loose or worn drive belts. Adjust tension and/or replace as necessary.
- A/C compressor (if equipped) or generator bearing. Replace as necessary.
- Valve train. Replace parts as necessary.
- Improper oil viscosity. Install proper viscosity oil for expected temperature. Refer to SECTION 0B for engine oil specifications.
- Excessive piston pin clearance. Replace piston and pin.
- Connecting rod alignment. Check and replace rods as necessary.
- Loose crankshaft balancer. Torque and/or replace worn parts.
- Piston pin offset to wrong side. Install correct piston.

ENGINE TESTS

COMPRESSION TEST

To diagnose valve or piston faults and poor engine operation, a compression test must be performed to determine the cylinder compression pressure. When checking cylinder compression, the throttle must be wide-open, all four spark plugs removed and the battery at or near full charge. Test each cylinder four times.

Testing Procedures

Figures 2 and 3

Tool Required:
J 22794 Spark Plug Port Adapter

1. Start engine and allow it to reach normal operating temperature.
2. Turn ignition switch to "LOCK".
3. Remove all four spark plugs and disconnect distributor electrical connector. Refer to SECTION 6D4.
4. Remove "FI" (15 amp) fuse from fuse block (Figure 2).

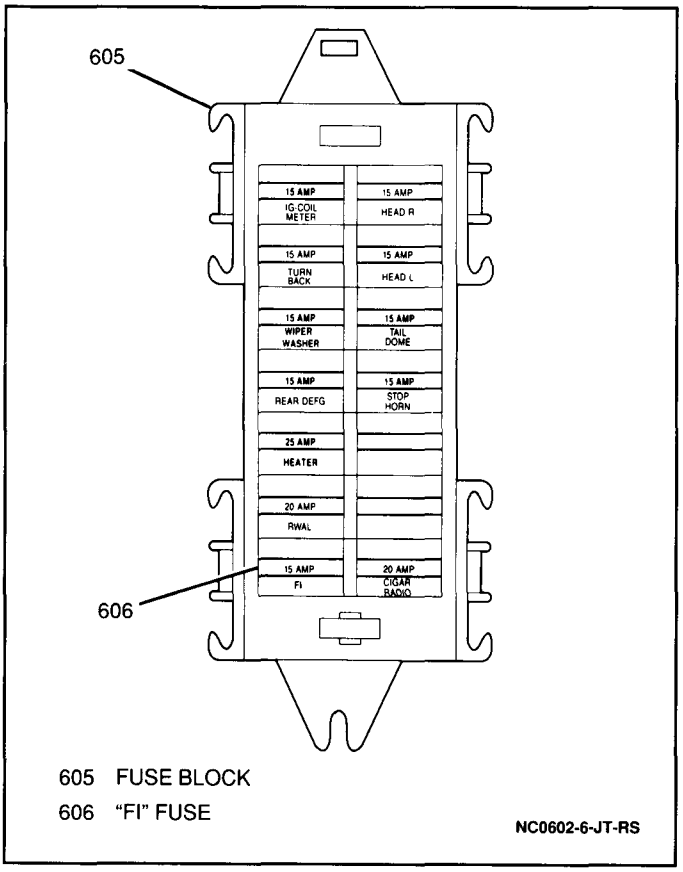

Figure 2 "FI" Fuse Location

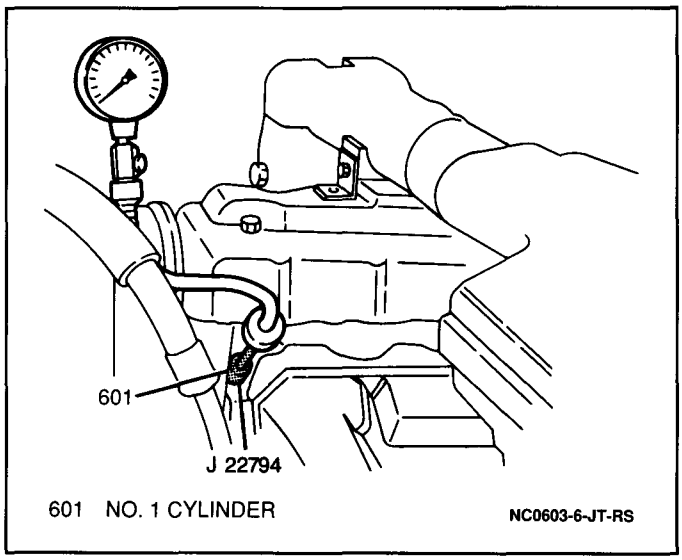

Figure 3 Compression Gage Installation

5. Install a J 22794 and a compression gage into a spark plug hole (Figure 3).
6. Disengage the clutch (manual transmission equipped vehicles) to lighten starting load on the engine and depress the accelerator pedal to the floor (wide-open throttle).
7. Crank engine (with a fully charged battery) to take four pressure readings.

Measure

- The highest pressure reading on the compression gage.
- Standard compression pressure is 1,400 kPa (199 psi) at 400 rpm.
- Minimum allowable compression pressure is 1,200 kPa (170 psi) at 400 rpm.

8. Repeat compression test procedures for remaining three cylinders.

Important

- The maximum allowable compression pressure difference between any two cylinders is 100 kPa (14.2 psi) at 400 rpm.

9. Remove the J 22794 and compression gage from the engine.
10. Install all four spark plugs and connect the distributor electrical connector. Refer to SECTION 6D4.
11. Install "FI" (15 amp) fuse to fuse block.

Evaluation

- Normal operation — If the cylinder compression pressure increases quickly and evenly to the compression standard (1,400 kPa/199 psi at 400 rpm), the pistons, piston rings and valves are operating normally.
- Piston rings faulty — If the cylinder compression is low on the first stroke and tends to increase on following strokes (but does not reach the compression standard), the probable cause is that the piston rings are faulty. Adding oil should improve the compression pressure considerably.
- Valves faulty — If the cylinder compression is low on the first stroke and does not increase on following strokes, the probable cause is that the valves are faulty. Adding oil will not significantly improve the compression pressure.

VACUUM TEST

Figure 4

Tool Required:
J 23738-A Mity-Vac Plastic Vacuum Pump

1. Start engine and allow it to reach normal operating temperature. Make sure that the engine idle speed is 700 to 800 rpm.
2. Turn ignition switch to "LOCK" and disconnect vacuum hoses from the throttle opener solenoid vacuum (TO SV) valve.
3. Connect a J 23738-A to the vacuum hose of the opener side. Connect a vacuum gage to the vacuum hose of the intake manifold side (Figure 4).
4. Start and run engine at idle and apply 52.9 to 66.3 kPa (15.7 to 19.7 in. Hg) of vacuum to the TO SV valve.
   - Read the vacuum gage. The vacuum should fall within 52.9 to 66.3 kPa (15.7 to 19.7 in. Hg) at 700 to 800 rpm.
5. Remove the J 23738-A and vacuum gage from the vacuum hoses.
6. Reconnect the vacuum hoses to the TO SV valve.

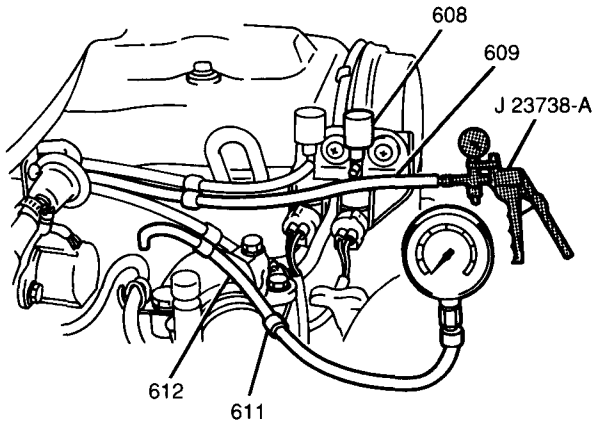

608 THROTTLE OPENER SOLENOID VACUUM (TO SV) VALVE
609 VACUUM HOSE (OPENER SIDE)
611 HOSE JOINT
612 VACUUM HOSE (INTAKE MANIFOLD SIDE)
PC0604-6-JT-RS

Figure 4 Engine Vacuum Test

OIL PRESSURE TEST

Important

- Prior to testing engine oil pressure, the following conditions must be met:
  - Oil must be at the "FULL" mark on the oil level indicator.
  - If the oil is discolored or deteriorated, it must be changed. Refer to SECTION 0B for oil specifications.
  - Any oil leaks must be repaired.

Testing Procedures

Figures 5 and 6

Tools Required:
J 21867 Oil Pressure Gage
J 25695-10 Oil Pressure Gage Adapter

1. Disconnect the oil pressure switch electrical connector and remove the switch from the cylinder block (Figure 5).

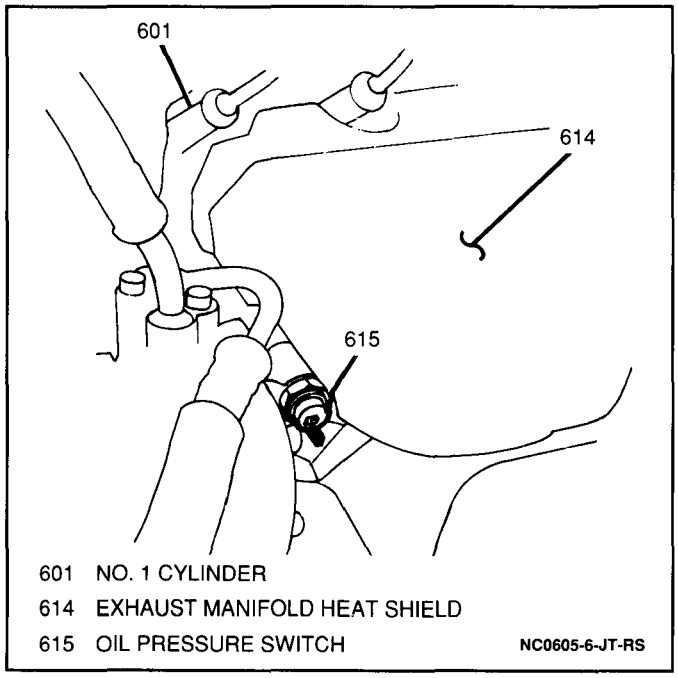

Figure 5 Oil Pressure Switch

2. Install a J 21867 with a J 25695-10 to the oil pressure switch cavity (Figure 6).

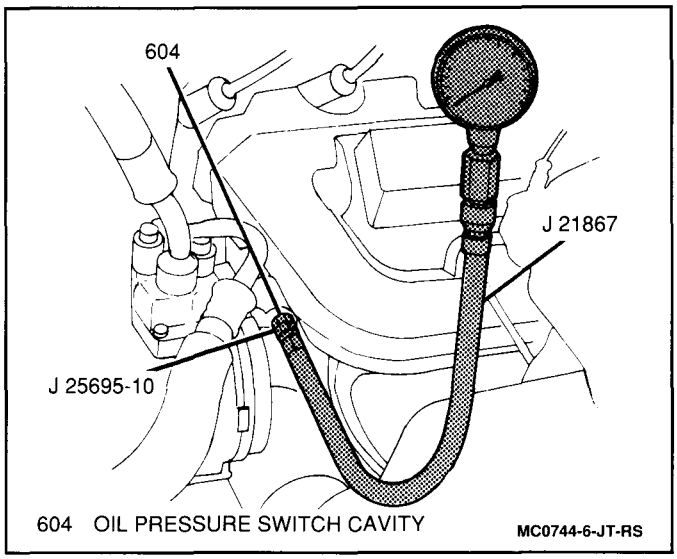

Figure 6 Measuring Oil Pressure

3. Start engine and allow it to reach its normal operating temperature.
4. Increase engine speed to 4,000 rpm.

Measure

- Engine oil pressure. Standard oil pressure is 324 to 421 kPa (47.0 to 61.1 psi) at 4,000 rpm.

5. Stop engine and remove the J 21867 and J 25695-10 from oil pressure switch cavity.
6. Wrap threads of oil pressure switch with sealing tape, install to cylinder block.

Tighten

- Oil pressure switch to 13 N·m (115 lb.in.).

7. Connect oil pressure switch electrical connector.
8. Check oil level and refill as necessary.
9. Start engine and check for oil leakage.

SPECIFICATIONS

FASTENER TORQUES

Oil Pressure Switch ..... 13 N·m (115 lb.in.)

GENERAL ENGINE SPECIFICATIONS

Engine Compression
- Standard ..... 1,400 kPa (199 psi) at 400 rpm
- Minimum ..... 1,200 kPa (170 psi) at 400 rpm
- Maximum Difference Between Cylinders. ..... 100 kPa (14.2 psi) at 400 rpm

Engine Vacuum Pressure ..... 52.9 - 66.3 kPa (15.7 - 19.7 in. Hg) at 700 - 800 rpm
Engine Oil Pressure ..... 324 - 421 kPa (47.0 - 61.1 psi) at 4,000 rpm

SPECIAL TOOLS

1
J 21867

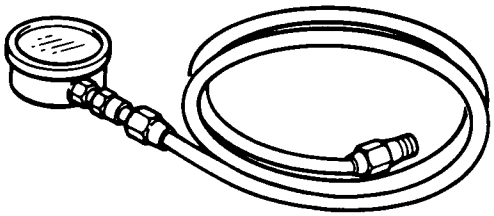

4
J 28428-D

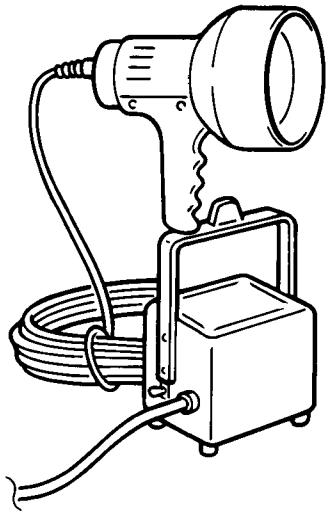

2
J 25695-10

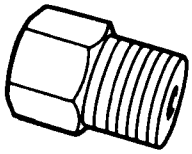

5
J 28431-6

3
J 22794

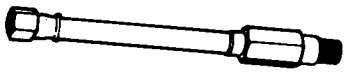

6
J 23738-A

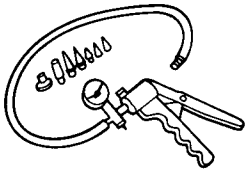

1 OIL PRESSURE GAGE
2 OIL PRESSURE GAGE ADAPTER
3 SPARK PLUG PORT ADAPTER
4 HIGH INTENSITY BLACK LIGHT
5 FLUORESCENT OIL ADDITIVE
6 MITY-VAC PLASTIC VACUUM PUMP

NC0606-6-JT-RS

SECTION 6A1

ENGINE MECHANICAL — 1.6 LITER L4 VIN CODE U

NOTICE: When fasteners are removed, always reinstall them at the same location from which they were removed. If a fastener needs to be replaced, use the correct part number fastener for that application. If the correct part number fastener is not available, a fastener of equal size and strength (or stronger) may be used. Fasteners that are not reused, and those requiring thread-locking compound, will be called out. The correct torque values must be used when installing fasteners that require them. If the above procedures are not followed, parts or system damage could result.

CONTENTS

General Description 6A1-1
Engine Construction 6A1-1
Cylinder Head and Valve Train 6A1-2
Cylinder Block 6A1-3
Crankshaft and Main Bearings 6A1-3
Piston, Rings, Piston Pins and Connecting Rods 6A1-3
Engine Lubrication 6A1-3
On-Vehicle Service 6A1-4
Engine Mounts 6A1-4
Checking Engine Mounts 6A1-4
Right-Side Engine Mount 6A1-4
Left-Side Engine Mount 6A1-5
Oil Level Indicator and Guide Tube 6A1-5
Oil Pressure Switch 6A1-6
Distributor Gear Case 6A1-6
Air Cleaner (ACL) Element 6A1-7
Air Intake Case 6A1-7
Air Cleaner (ACL) 6A1-8
Intake Manifold and Throttle Body Fuel Injection (TBI) Unit 6A1-9
Exhaust Manifold 6A1-11
Cylinder Head Cover 6A1-12
Valve Lash 6A1-13
Timing Belt and Tensioner 6A1-16
Rocker Arms and Rocker Arm Shafts 6A1-19
Rocker Arms and Rocker Arm Shafts Off-Vehicle Service 6A1-21
Camshaft, Valves and Cylinder Head 6A1-23
Cylinder Head and Valve Off-Vehicle Service 6A1-26
Engine Oil Pan and Oil Pump Strainer 6A1-35
Oil Pump 6A1-37
Oil Pump Overhaul 6A1-39
Pistons, Piston Rings, Cylinders and Connecting Rods 6A1-40
Pistons 6A1-42
Piston Rings 6A1-45
Piston Pins 6A1-46
Cylinders 6A1-46
Connecting Rods 6A1-47
Main Bearings 6A1-48
Main Bearing Clearance 6A1-49
Selection of Main Bearings 6A1-50
Flywheel 6A1-52
Flywheel Balancing (Automatic Transmission Equipped Vehicles) 6A1-53
Rear Main Seal 6A1-53
Engine Assembly 6A1-53
Cylinder Block Service 6A1-56
Crankshaft 6A1-59
Thread Repair 6A1-63
Specifications 6A1-64
Fastener Tightening Specifications 6A1-64
Engine Specifications 6A1-65
Service Parts Information 6A1-67
Special Tools 6A1-69

GENERAL DESCRIPTION

ENGINE CONSTRUCTION

Figure 1

The engine is a four cylinder in-line, four stroke gasoline unit with a single overhead cam (SOHC) valve mechanism arranged for "V"-type valve configuration.

The SOHC is mounted over the cylinder head and is driven by the crankshaft through the timing belt. In this configuration, there are no pushrods provided in the valve train system (Figure 1).

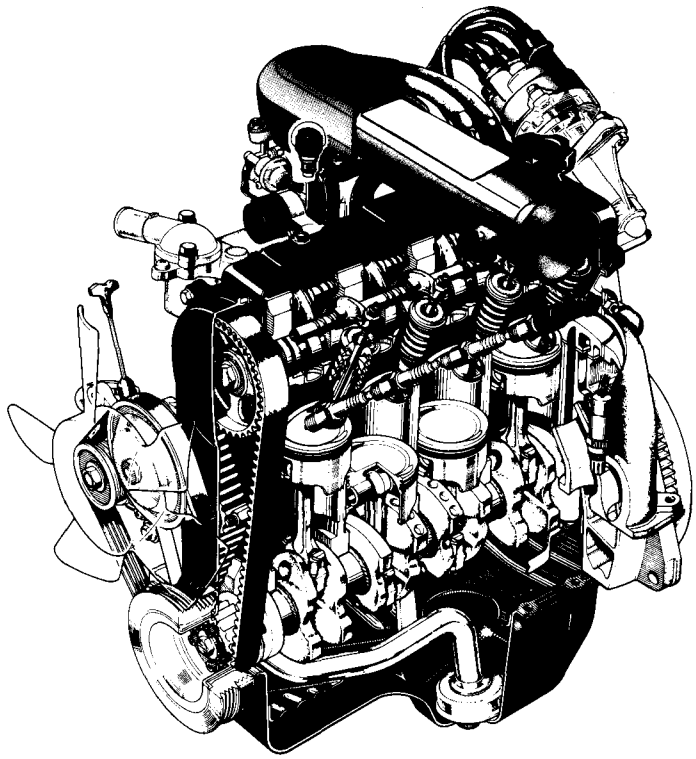

Figure 1 Engine Construction

Cylinder Head and Valve Train

Figure 2

The cylinder head is made of a cast aluminum alloy and has four in-line combustion chambers. Each combustion chamber has an intake and an exhaust valve.

An air induction nozzle is provided near each intake valve. During each intake stroke of the engine, the air/fuel mixture enters into the combustion chamber from the throttle body fuel injection (TBI) unit through the intake manifold and intake valve. Air is jetted into the combustion chamber at the same time through the air induction nozzle from the TBI unit and air induction passage in the intake manifold. The air jetted into the combustion chamber accelerates the mixture swirl improving combustion efficiency (Figure 2).

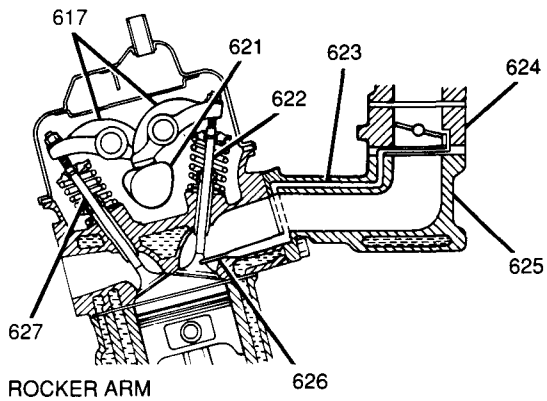

617 ROCKER ARM
621 CAMSHAFT
622 INTAKE VALVE
623 AIR INDUCTION PASSAGE
624 THROTTLE BODY FUEL INJECTION (TBI) UNIT
625 INTAKE MANIFOLD
626 AIR INDUCTION NOZZLE
627 EXHAUST VALVE

PC2100-6A1-EJ-RS

Figure 2 Cylinder Head and Valve Train

The valve train is driven by the single overhead camshaft. The camshaft has eight cams. Each cam operates an intake or exhaust valve through a rocker arm. Valve lash can be adjusted by turning the adjusting screw on the rocker arm after loosening the locknut. This will increase or decrease clearance between rocker arm and valve stem.

Cylinder Block

The cylinder block is made of cast aluminum alloy and has four cylinders arranged in-line. A cylindrical cast iron sleeve is installed in each cylinder.

Crankshaft and Main Bearings

A monoblock casting crankshaft is supported by five main bearings. It has an eight-piece type counterweight which is incorporated with the balance weight. Four crank pins on the crankshaft are positioned 180 degrees apart. The bearing caps incorporate bearing cap supports.

Pistons, Rings, Piston Pins and Connecting Rods

The piston is cast aluminum alloy, and has two compression rings and one oil ring. The top compression ring is plated with hard chromium for improvement in abrasion resistance. The oil ring consists of two rails and one spacer.

The piston pin is offset 0.5 mm (0.02-inch) toward the thrust side. This allows a gradual change in thrust pressure against the cylinder wall as the piston travels through the bore. Piston pins are chromium steel and have a floating fit in the pistons and, partially, in the connecting rods. The connecting rods are made of forged steel, and the rod bearings are of precession insert type.

ENGINE LUBRICATION

Figure 3

The oil pump is of the trochoid type, and is mounted on the crankshaft at the crankshaft pulley side. Oil is drawn up through the oil pump strainer and passed through the pump to the oil filter. The filtered oil flows in two paths in the cylinder block (Figure 3).

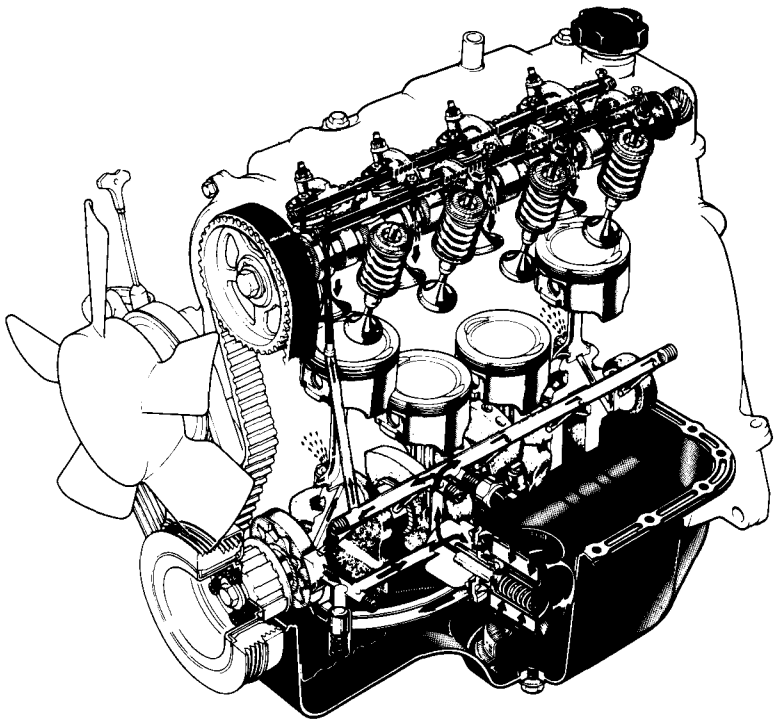

Figure 3 Engine Lubrication

In one path, oil reaches the crankshaft journal bearings. Oil from the crankshaft journal bearings is supplied to the rod bearings by means of intersecting passages drilled in the crankshaft. It is then injected through a small hole in the connecting rod to lubricate the pistons, rings and cylinder walls.

In the second path, oil flows to the cylinder head and lubricates the rocker arms, valves, camshaft, etc., after passing through the internal oil passage of the rocker arm shafts.

A pressure relief valve is provided on the oil pump to relieve oil pressure when it becomes greater than 392 kPa (56.9 psi). As oil pressure is relieved, oil is diverted through the valve back to the engine oil pan.

ON-VEHICLE SERVICE

ENGINE MOUNTS

Engine mounts are the nonadjustable type and seldom require service. Broken or deteriorated mounts must be replaced immediately, because of the added strain placed on the other mounts and driveline components.

Checking Engine Mounts

Raise the engine to remove weight from the mounts and to place a slight tension in the rubber. Observe mounts while raising engine. Replace any mount that exhibits:

- Hard rubber surfaces covered with heat check cracks.
- Rubber separated from a metal plate of the mount.
- Rubber split through center.

If there is movement between a metal plate of the mount and its attaching points, lower the engine on the mount and tighten the bolts or nuts securing the mount to the engine, frame or bracket.

Right-Side Engine Mount

Figure 4

Remove or Disconnect

1. Negative (-) battery cable.
2. Four bolts and reposition shroud to the rear.
- Raise and suitably support vehicle. Refer to SECTION 0A.
- Support engine using a suitable engine support stand.
3. Four bolts and front skid plate from engine (if equipped).
4. Lead wires from starter motor to gain clearance for engine mount assembly removal. Refer to SECTION 6D2.
5. Three right-side engine mount-to-frame bracket bolts (Figure 4).

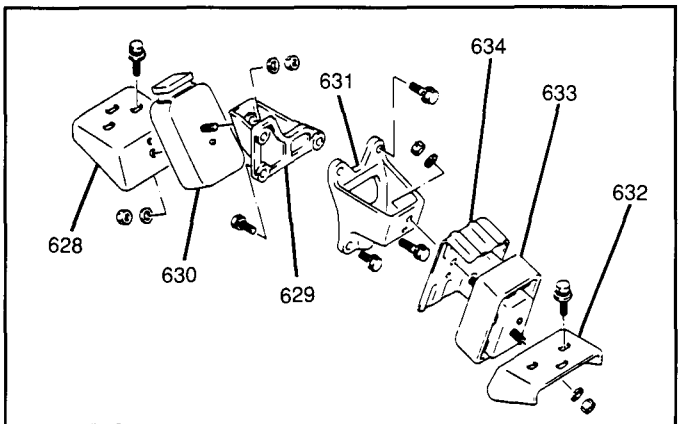

628 RIGHT-SIDE ENGINE MOUNT-TO-FRAME BRACKET
629 RIGHT-SIDE ENGINE MOUNT-TO-ENGINE BRACKET
630 RIGHT-SIDE ENGINE MOUNT
631 LEFT-SIDE ENGINE MOUNT-TO-ENGINE BRACKET
632 LEFT-SIDE ENGINE MOUNT-TO-FRAME BRACKET
633 LEFT-SIDE ENGINE MOUNT
634 LEFT-SIDE ENGINE MOUNT COVER PC2101-6A1-EJ-RS

Figure 4 Engine Mounts

6. Three right-side engine mount-to-engine bracket bolts.
- Raise engine slightly to provide clearance for engine mount assembly removal.
7. Right-side engine mount from vehicle.

Disassemble

1. Right-side engine mount-to-frame bracket from engine mount.
2. Right-side engine mount-to-engine bracket from engine mount.

Assemble

1. Right-side engine mount-to-engine bracket to engine mount.
2. Right-side engine mount-to-frame bracket to engine mount.

Install or Connect

1. Right-side engine mount to engine.
2. Three right-side engine mount-to-frame bracket bolts. Do not tighten fully.
3. Three right-side engine mount-to-engine bracket bolts.

Tighten

- Right-side engine mount-to-frame bracket bolts to 55 N·m (40 lb.ft.).
- Right-side engine mount-to-engine bracket bolts to 55 N·m (40 lb.ft.).

4. Lead wires to starter motor. Refer to SECTION 6D2.
- Remove engine support stand.
5. Front skid plate to engine (if equipped); secure with four bolts.

Tighten

- Front skid plate bolts to 55 N·m (40 lb.ft.).

- Lower vehicle.
6. Shroud to radiator; secure with four bolts.

Tighten

- Shroud bolts to 10 N·m (89 lb.in.).

7. Negative (-) battery cable.

Tighten

- Negative (-) battery cable-to-negative (-) battery terminal retainer to 15 N·m (11 lb.ft.).

Left-Side Engine Mount

Figure 4

Remove or Disconnect

1. Negative (-) battery cable.
2. Four bolts and reposition shroud to the rear.
- Raise and suitably support vehicle. Refer to SECTION 0A.
3. Four bolts and front skid plate from engine (if equipped).
4. Exhaust pipe-to-bracket nut.
5. Two left-side engine mount-to-bracket bolts.
- Lower vehicle.
- Support engine using a floor jack.
6. Two left-side engine mount-to-exhaust bracket bolts and exhaust bracket from vehicle.
7. Three left-side engine mount-to-frame bracket bolts.
- Raise engine slightly to provide clearance for left-side engine mount removal.
8. Left-side engine mount from vehicle.

Disassemble

1. Left-side engine mount-to-frame bracket from engine mount.
2. Left-side engine mount-to-engine bracket from engine mount.

Assemble

1. Left-side engine mount-to-frame bracket to engine mount.
2. Left-side engine mount-to-engine bracket to engine mount.

Install or Connect

1. Left-side engine mount to vehicle.
2. Three left-side engine mount-to-frame bracket bolts. Do not tighten fully.
3. Exhaust bracket; secure with two engine mount-to-exhaust bracket bolts.

Tighten

- Engine mount-to-exhaust bracket bolts to 55 N·m (40 lb.ft.).
- Left-side engine mount-to-frame bracket bolts to 55 N·m (40 lb.ft.).

- Raise and suitably support vehicle.
4. Two left-side engine mount-to-engine bolts. Do not tighten fully.
5. One exhaust pipe-to-bracket nut.

Tighten

- Left-side engine mount-to-engine bolts to 55 N·m (40 lb.ft.).
- Exhaust pipe-to-bracket nut to 50 N·m (37 lb.ft.).

6. Front skid plate to vehicle (if equipped); secure with four bolts.

Tighten

- Front skid plate bolts to 55 N·m (40 lb.ft.).

- Lower vehicle.
7. Shroud to radiator; secure with four bolts.

Tighten

- Shroud bolts to 10 N·m (89 lb.in.).

8. Negative (-) battery cable.

Tighten

- Negative (-) battery cable-to-negative (-) battery terminal retainer to 15 N·m (11 lb.ft.).

OIL LEVEL INDICATOR AND GUIDE TUBE

Figure 5

Remove or Disconnect

1. Oil level indicator from guide tube.
2. One bolt and guide tube from cylinder block (Figure 5).

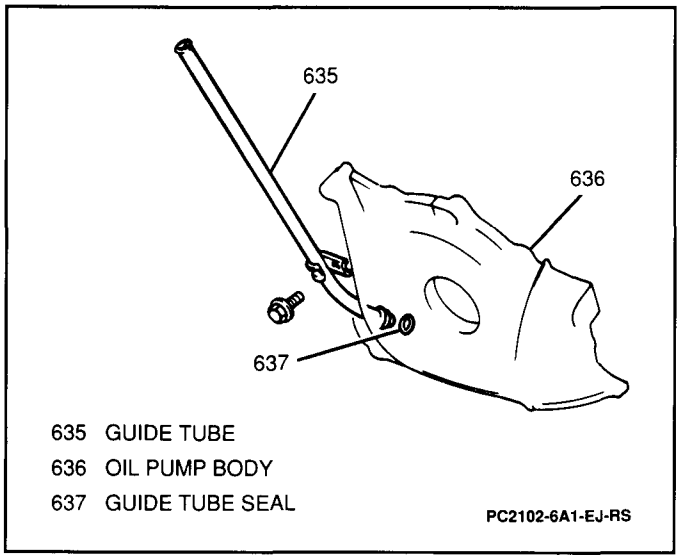

Figure 5 Oil Level Indicator Guide Tube

3. Guide tube seal from oil pump body.

Install or Connect

- Coat new guide tube seal with new engine oil.
1. New guide tube seal to cylinder block.
2. Guide tube to cylinder block; secure with one bolt.

Tighten

- Guide tube bolt to 14 N·m (124 lb.in.).

3. Oil level indicator to guide tube.

OIL PRESSURE SWITCH

Remove or Disconnect

1. Negative (-) battery cable.
2. Rubber boot and electrical connector from oil pressure switch.
3. Oil pressure switch from engine.

Important

- For diagnosis of oil pressure switch, refer to SECTION 8A.

Install or Connect

- Coat oil pressure switch threads with Loctite® pipe sealant (with Teflon®) GM P/N 1052080, or equivalent, to prevent leaks.
1. Oil pressure switch to engine.

Tighten

- Oil pressure switch to 14 N·m (124 lb.in.).

2. Electrical connector to oil pressure switch.
3. Rubber boot to electrical connector.
4. Negative (-) battery cable.

Tighten

- Negative (-) battery cable-to-negative (-) battery terminal retainer to 15 N·m (11 lb.ft.).

DISTRIBUTOR GEAR CASE

Figure 6

Remove or Disconnect

1. Negative (-) battery cable.
2. Distributor ground wires from distributor gear case.
3. Distributor from distributor gear case. Refer to SECTION 6D4.
4. Three bolts and distributor gear case with O-ring from cylinder head (Figure 6).

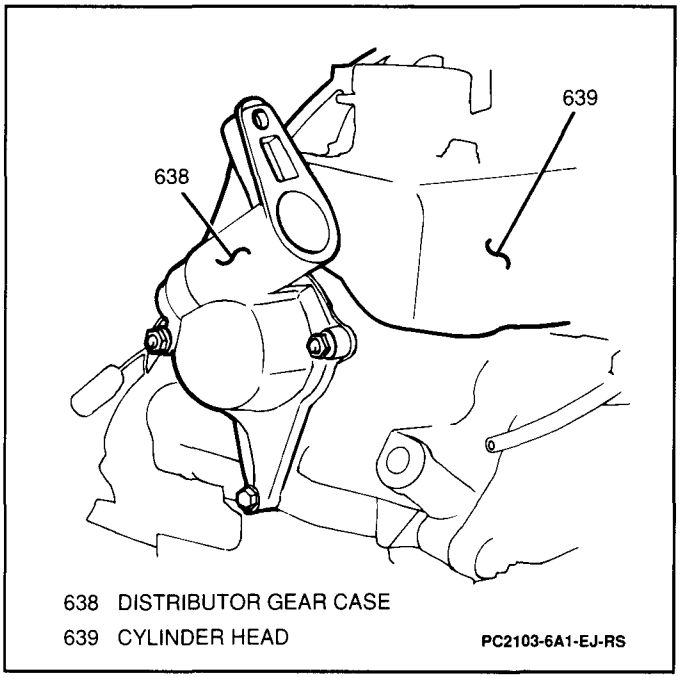

Figure 6 Distributor Gear Case

NOTICE: Place a suitable shop pan under the gear case to catch escaping engine oil from the cylinder head.

Install or Connect

- Lubricate a new O-ring with engine oil and install into distributor gear case.
1. Distributor gear case to cylinder head; secure with three bolts.

Tighten

- Distributor gear case bolts to 10 N·m (89 lb.in.).

- Add approximately 30 cc (1.01 oz.) of engine oil into the distributor gear case after installation to the cylinder head.
2. Distributor to distributor gear case. Refer to SECTION 6D4.
3. Distributor ground wires to distributor gear case.
4. Negative (-) battery cable.

Tighten

- Negative (-) battery cable-to-negative (-) battery terminal retainer to 15 N·m (11 lb.ft.).

Adjust

- Engine timing. Refer to SECTION 6E2.

AIR CLEANER (ACL) ELEMENT

Figures 7 and 8

Remove or Disconnect

1. Six screws and ACL upper case.
2. ACL element from ACL lower case (Figure 7).

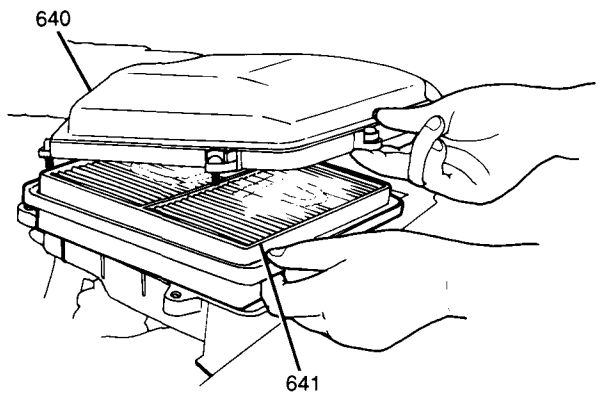

640 ACL UPPER CASE
641 ACL ELEMENT
PC2104-6A1-EJ-RS

Figure 7 Removing Air Cleaner (ACL) Element

Clean

- Blow out dust from inside of ACL element with compressed air (Figure 8).

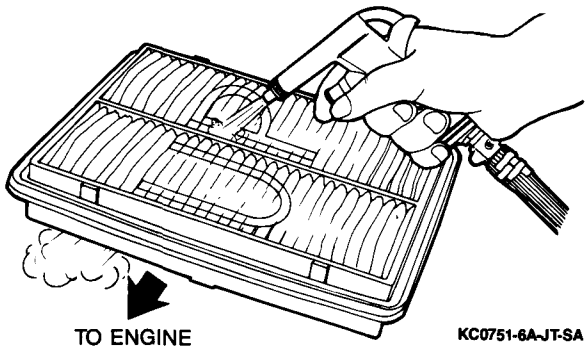

KC0751-6A-JT-SA

Figure 8 Cleaning Air Cleaner (ACL) Element

Install or Connect

1. ACL element to lower case.
2. ACL upper case; secure with six screws.

AIR INTAKE CASE

Figures 9 and 10

Remove or Disconnect

1. Four screws and air intake case cover (Figure 9).

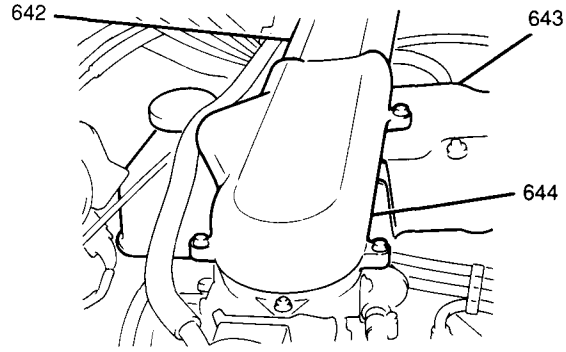

642 AIR INTAKE CASE
643 CYLINDER HEAD COVER
644 AIR INTAKE CASE COVER
PC2105-6A1-EJ-RS

Figure 9 Air Intake Case

2. Four bolts and air intake case support brace from air intake case.
3. Positive crankcase ventilation (PCV) valve hose from air intake case.
4. Two nuts and air intake case and case seal from throttle body fuel injection (TBI) unit.

Install or Connect

1. Air intake case with new case seal to TBI unit; secure with two nuts (Figure 10).

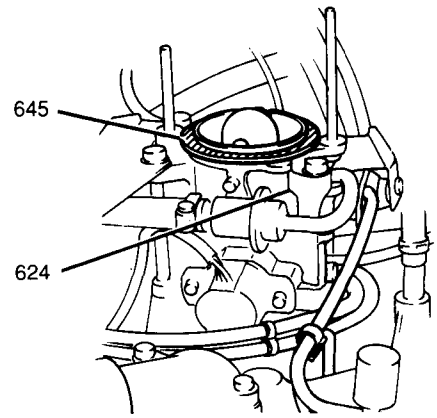

624 THROTTLE BODY FUEL INJECTION (TBI) UNIT
645 CASE SEAL
PC2106-6A1-EJ-RS

Figure 10 Throttle Body Fuel Injection (TBI) Unit and Case Seal

Tighten

- Air intake case nuts to 10 N·m (89 lb.in.).

2. PCV valve hose to air intake case.
3. Air intake support brace to air intake case; secure with four bolts.

Tighten

- Air intake support brace bolts to 15 N·m (11 lb.ft).

4. Air intake case cover; secure with four screws.

AIR CLEANER (ACL)

Remove or Disconnect

1. One hose clamp and air intake hose from ACL case.
2. One hose clamp and air duct from ACL case.
3. Two mounting bolts and ACL from vehicle.

Install or Connect

1. ACL to vehicle; secure with two mounting bolts.

Tighten

- ACL mounting bolts to 10 N·m (89 lb.in.).

2. Air duct to ACL case; secure with hose clamp.
3. Air intake hose to ACL case; secure with hose clamp.

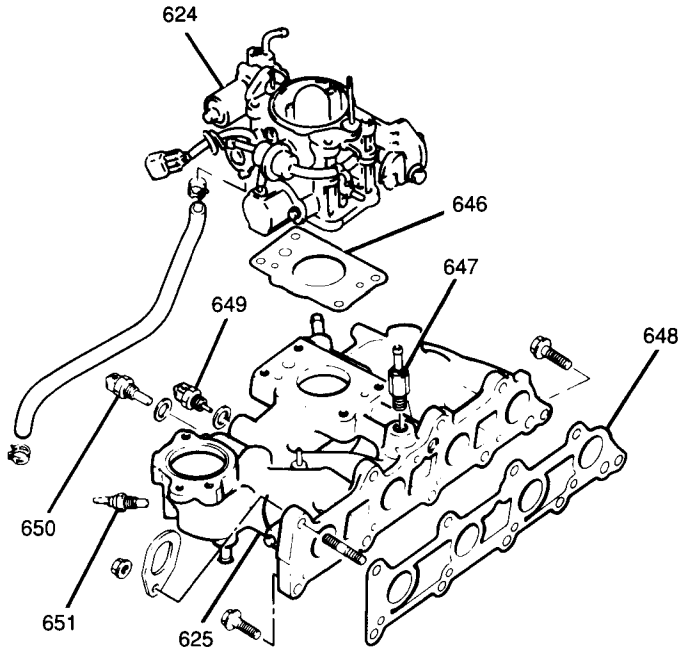

624 THROTTLE BODY FUEL INJECTION (TBI) UNIT
625 INTAKE MANIFOLD
646 TBI UNIT GASKET
647 POSITIVE CRANKCASE VENTILATION (PCV) VALVE
648 INTAKE MANIFOLD GASKET
649 INTAKE AIR TEMPERATURE (IAT) SENSOR
650 ENGINE COOLANT TEMPERATURE (ECT) SENSOR
651 ECT SENSOR SENDING UNIT

PC2107-6A1-EJ-RS

Figure 11 Throttle Body Fuel Injection (TBI) Unit and Intake Manifold

INTAKE MANIFOLD AND THROTTLE BODY FUEL INJECTION (TBI) UNIT

Figures 11 through 16

Remove or Disconnect

- Release fuel pressure. Refer to SECTION 6C.

1. Negative (-) battery cable.
2. Fuel filler cap to release fuel vapor pressure in fuel tank. After releasing pressure, replace cap.
3. Air cleaner (ACL). Refer to "Air Cleaner (ACL)" earlier in this section.

- Drain coolant from radiator. Refer to SECTION 6B.

4. Accelerator cable and kickdown cable (automatic transmission equipped vehicles) from TBI unit (Figure 12).

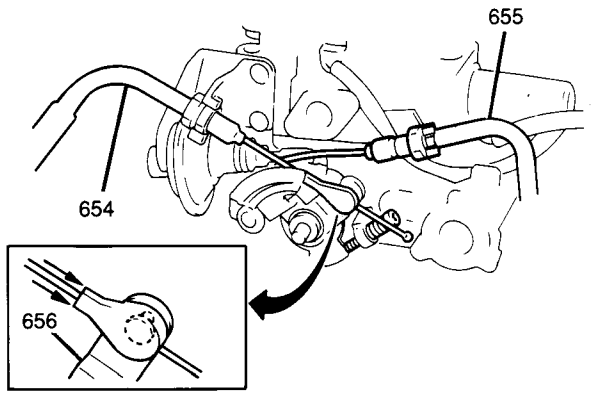

654 KICK-DOWN CABLE
655 ACCELERATOR CABLE
656 THROTTLE LEVER
PC2109-6A1-EJ-RS

Figure 12 Accelerator and Kickdown Cable

5. The following electrical connectors:
   - Throttle position (TP) sensor.
   - Idle air control (IAC) valve.
   - Throttle opener solenoid vacuum (TO SV) valve.
   - Manifold absolute pressure (MAP) sensor.
   - Intake air temperature (IAT) sensor (Figure 13).
   - Engine coolant temperature (ECT) sensor (Figure 13).
   - ECT sensor sending unit (Figure 13).
   - A/C ECT switch (A/C equipped vehicles only).
   - Exhaust gas recirculation (EGR) temperature sensor (California specification vehicles).
   - Wiring harness from retaining clamps.
   - Engine ground wire from intake manifold.

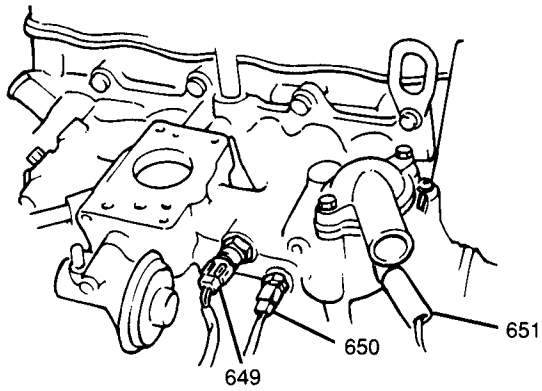

649 INTAKE AIR TEMPERATURE (IAT) SENSOR
650 ENGINE COOLANT TEMPERATURE (ECT) SENSOR
651 ECT SENSOR SENDING UNIT
PC2110-6A1-EJ-RS

Figure 13 Intake Manifold Electrical Harness Removal

6. The following vacuum hoses:
   - TO SV valve (Figure 14).
   - Solenoid purge (SP) valve (Figure 14).
   - EGR valve.

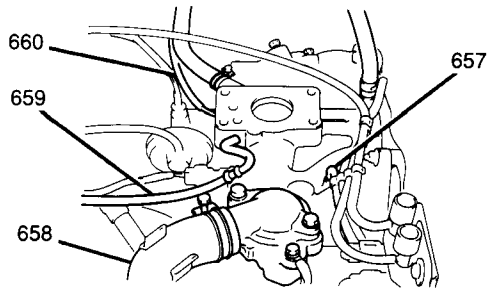

657 THROTTLE OPENER SOLENOID VACUUM (TO SV) VALVE
658 RADIATOR INLET HOSE
659 SOLENOID PURGE (SP) VALVE HOSE
660 MANIFOLD ABSOLUTE PRESSURE (MAP) SENSOR HOSE
PC2111-6A1-EJ-RS

Figure 14 Intake Manifold Vacuum Hoses

7. Coolant hose from the IAC valve.
8. IAC air hose from IAC valve.
9. Fuel feed pipe from TBI unit and intake manifold (Figure 15).

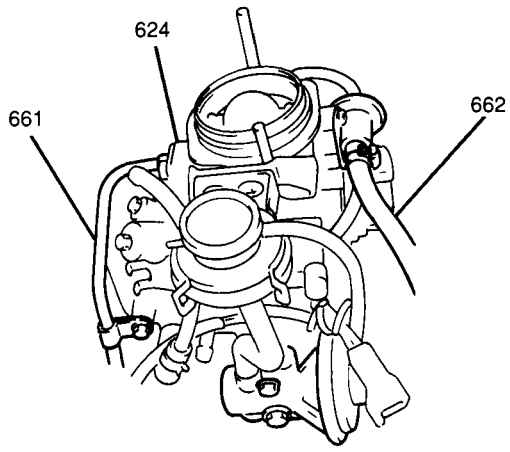

624 THROTTLE BODY FUEL INJECTION (TBI) UNIT
661 FUEL FEED PIPE
662 FUEL RETURN HOSE PC2112-6A1-EJ-RS

Figure 15 Fuel Pipe Location

10. Fuel return hose from fuel pressure (FPR) regulator (Figure 15).
11. PCV hose from PCV valve.
12. MAP sensor hose and brake booster hose from intake manifold.
13. Coolant hose from thermostat housing.
14. Coolant bypass and heater inlet hoses from intake manifold.
15. Four nuts, five bolts, engine hanger and intake manifold assembly from cylinder head.
16. PCV valve, EGR valve, ECT sensor, ECT sending unit, A/C ECT switch (A/C equipped vehicles only) and EGR temperature sensor (California specification vehicles) from intake manifold, if required.

Install or Connect

1. PCV valve, EGR valve, ECT sensor, ECT sensor sending unit, A/C ECT switch (A/C equipped vehicles only) and EGR temperature sensor (California specification vehicles) to intake manifold, if removed.
2. Intake manifold assembly to cylinder head with new gasket; secure with engine hanger, wiring harnesses, four nuts and five bolts.

Tighten

- Intake manifold nuts and bolts to 23 N·m (17 lb.ft.).

3. Coolant bypass and heater inlet hoses to intake manifold.
4. Coolant hose to thermostat housing.
5. MAP sensor hose and brake booster hose to intake manifold.
6. PCV hose to PCV valve.
7. Fuel return hose to fuel pressure regulator.
8. Fuel feed pipe to TBI unit and intake manifold.
9. Coolant hose to the IAC valve.
10. IAC air hose to IAC valve.
11. The following vacuum hoses:
    - TO SV valve.
    - SP valve.
    - EGR valve.
12. The following electrical connectors:
    - TP sensor.
    - IAC valve.
    - TO SV valve.
    - IAT sensor.
    - MAP sensor.
    - ECT sensor.
    - ECT sensor sending unit.
    - A/C ECT switch (A/C equipped vehicles only).
    - EGR temperature sensor (California specification vehicles).
    - Engine ground wire from intake manifold.
    - Wiring harness to retaining clamps (Figure 16).

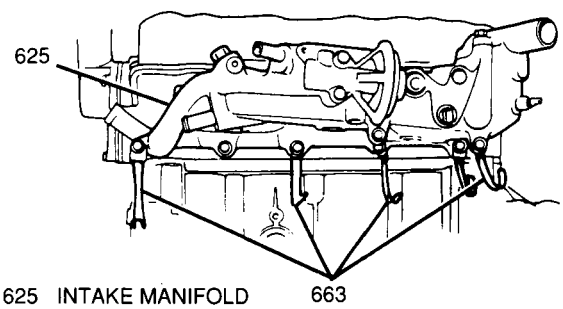

625 INTAKE MANIFOLD
663 WIRING HARNESS RETAINING CLAMPS
PC2113-6A1-EJ-RS

Figure 16 Wiring Harness Retaining Clamps

13. Accelerator cable and kickdown cable (automatic transmission equipped vehicles) to TBI unit.

Adjust

- Accelerator cable play to specifications. Refer to SECTION 6C.

- Refill radiator. Refer to SECTION 6B.

14. ACL. Refer to "Air Cleaner (ACL)" earlier in this section.
15. Negative (-) battery cable.

Tighten

- Negative (-) battery cable-to-negative (-) battery terminal retainer to 15 N·m (11 lb.ft.).

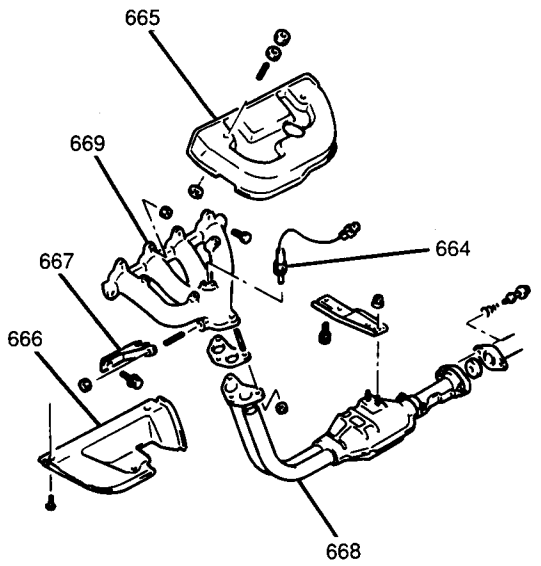

664 OXYGEN (O2S) SENSOR
665 UPPER EXHAUST MANIFOLD COVER
666 LOWER EXHAUST MANIFOLD COVER
667 EXHAUST BRACKET
668 FRONT PIPE/THREE WAY CATALYTIC CONVERTER (TWC) ASSEMBLY
669 EXHAUST MANIFOLD PC2114-6A1-EJ-RS

Figure 17 Exhaust System

EXHAUST MANIFOLD

Figures 17, 18 and 19

CAUTION: To avoid the danger of being burned, do not service exhaust system while it is still hot. Service should be performed only after the system has had sufficient time to cool down.

Remove or Disconnect

1. Negative (-) battery cable.
2. Oxygen sensor (O2S) electrical connector (Figure 18).

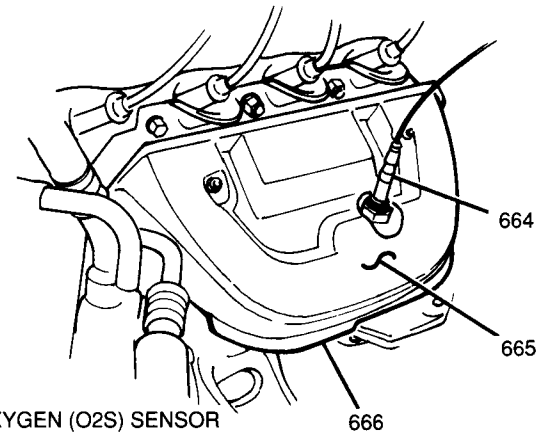

664 OXYGEN (O2S) SENSOR
665 UPPER EXHAUST MANIFOLD COVER
666 LOWER EXHAUST MANIFOLD COVER PC2115-6A1-EJ-RS

Figure 18 Oxygen Sensor and Exhaust Manifold Covers

3. Air intake pipe with bracket and air cleaner (ACL) outlet hose.
4. Three nuts and upper exhaust manifold cover from exhaust manifold (Figure 18).
5. Three bolts and lower exhaust manifold cover from exhaust manifold (Figure 18).
6. Two engine mount-to-exhaust bracket bolts, one exhaust bracket-to-exhaust manifold nut and exhaust bracket from vehicle.
7. Three bolts and front pipe/three way catalytic converter (TWC) assembly, with gasket, from exhaust manifold (Figure 19).

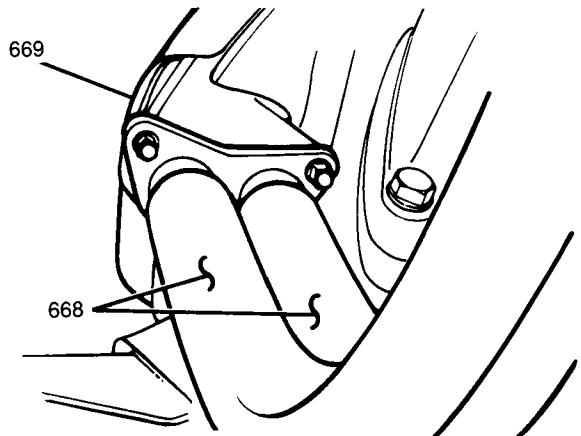

668 FRONT PIPE/THREE WAY CATALYTIC CONVERTER (TWC) ASSEMBLY
669 EXHAUST MANIFOLD PC2116-6A1-EJ-RS

Figure 19 Front Pipe/Three Way Catalytic Converter (TWC)-to-Exhaust Manifold Connection

8. Two nuts, six bolts and exhaust manifold, with gasket and engine hanger, from cylinder head.

Install or Connect

1. New exhaust manifold gasket to cylinder head.
2. Exhaust manifold to cylinder head; secure with engine hanger, two nuts and six bolts.

Tighten

- Exhaust manifold-to-cylinder head nuts and bolts to 23 N·m (17 lb.ft.).

3. Front pipe/TWC assembly, with new gasket, to exhaust manifold; secure with three bolts.

Tighten

- Exhaust manifold-to-front pipe/TWC assembly to 50 N·m (37 lb.ft.).

4. Exhaust bracket to vehicle; secure with two engine mount-to-exhaust bracket bolts and one exhaust bracket-to-exhaust manifold nut.

Tighten

- Engine mount-to-exhaust bracket bolts to 55 N·m (40 lb.ft.).
- Exhaust bracket-to-exhaust manifold nut to 50 N·m (37 lb.ft.).

5. Upper exhaust manifold cover to exhaust manifold; secure with three nuts.
6. Lower exhaust manifold cover to exhaust manifold; secure with three bolts.

Tighten

- Exhaust manifold cover nuts and bolts to 11 N·m (97 lb.in.).

7. Air intake pipe to air intake case; secure with hose bracket.
8. ACL outlet hose to ACL; secure with hose bracket.
9. O2S electrical connector.
10. Negative (-) battery cable.

Tighten

- Negative (-) battery cable-to-negative (-) battery terminal retainer to 15 N·m (11 lb.ft.).

CYLINDER HEAD COVER

Figures 20 and 21

Remove or Disconnect

1. Negative (-) battery cable.
2. Air intake case. Refer to "Air Intake Case" earlier in this section.
3. Positive crankcase ventilation (PCV) valve hose from cylinder head cover.
4. Secondary (spark plug) wires from spark plugs and retainer on cylinder head cover (Figure 20).

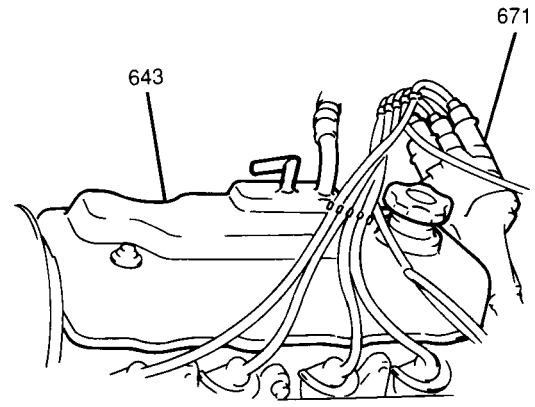

643 CYLINDER HEAD COVER
671 DISTRIBUTOR PC2117-6A1-EJ-RS

Figure 20 Secondary (Spark Plug) Wires

5. Accelerator cable and kickdown cable (automatic transmission equipped vehicles) from throttle body fuel injection (TBI) unit.
6. Four bolts and cylinder head cover from cylinder head (Figure 21).

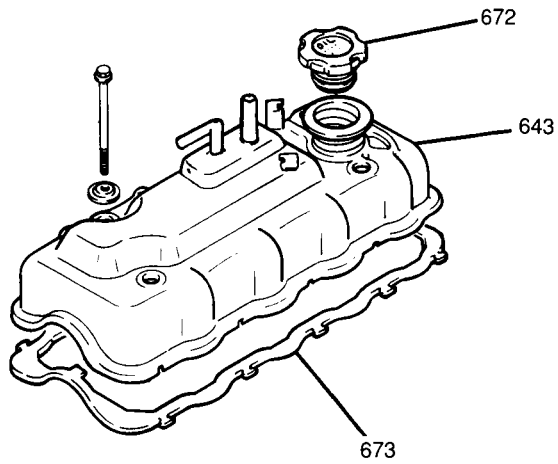

643 CYLINDER HEAD COVER
672 OIL FILLER CAP
673 CYLINDER HEAD COVER GASKET PC2118-6A1-EJ-RS

Figure 21 Cylinder Head Cover

7. Cylinder head cover gasket from cylinder head.

Clean

- Sealing surfaces on cylinder head and cylinder head cover.

Important

- ALWAYS use new cylinder head cover gasket.

Install or Connect

1. Cylinder head cover, with new gasket, to cylinder head; secure with four nuts.

Tighten

- Cylinder head cover nuts to 5 N·m (44 lb.in.).

2. Accelerator cable and kickdown cable (automatic transmission equipped vehicles) to TBI unit.

Adjust

- Accelerator cable play to specifications. Refer to SECTION 6C.

3. PCV valve hose to cylinder head cover.
4. Secondary (spark plug) wires to spark plugs and retainer on cylinder head cover.
5. Air intake case. Refer to "Air Intake Case" earlier in this section.
6. Negative (-) battery cable.

Tighten

- Negative (-) battery cable-to-negative (-) battery terminal retainer to 15 N·m (11 lb.ft.).

VALVE LASH

Figure 22

Valve lash is the gap between the rocker arm adjusting screw and the valve stem when the valve is closed. Valve lash can be adjusted with a cold engine (coolant temperature 25°C [77°F]) or a hot engine (coolant temperature 68°C [154°F]) (Figure 22).

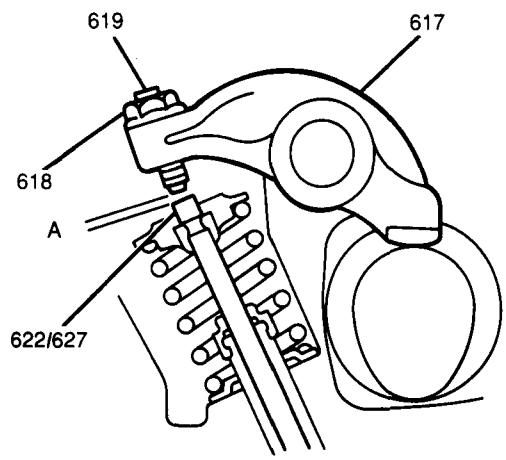

A VALVE LASH
617 ROCKER ARM
618 LOCKNUT
619 VALVE LASH ADJUSTING SCREW
622 INTAKE VALVE
627 EXHAUST VALVE
COLD COOLANT TEMP 25°C (77°F)
HOT COOLANT TEMP 68°C (154°F)

PC2120-6A1-EJ-RS

Figure 22 Valve Lash

Valve Lash Specifications

- Intake valve cold valve lash is 0.13 to 0.17 mm (0.0051 to 0.0067-inch).
- Intake valve hot valve lash is 0.23 to 0.27 mm (0.009 to 0.011-inch).
- Exhaust valve cold valve lash is 0.15 to 0.19 mm (0.0063 to 0.0075-inch).
- Exhaust valve hot valve lash is 0.25 to 0.29 mm (0.0102 to 0.0114-inch).

Measurement and Adjustment Procedures

Figures 23 through 26

1. Remove cylinder head cover. Refer to "Cylinder Head Cover" earlier in this section.
2. Turn the crankshaft pulley clockwise until "V" mark (in white paint) on pulley is aligned with the "0" (zero) calibrated on timing belt cover (Figure 23).

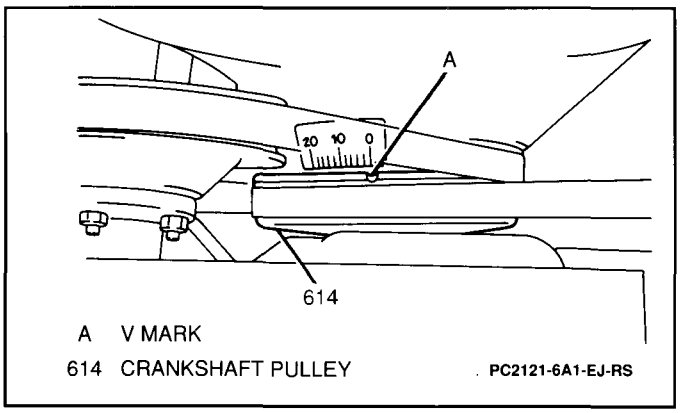

Figure 23 Timing Mark Alignment for Valve Lash Adjustment

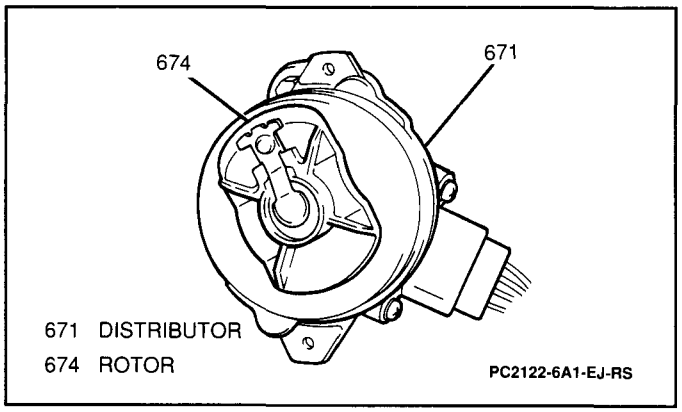

Figure 24 Rotor Positioning for Valve Lash Adjustment

3. Remove the distributor cap and check if rotor is positioned as shown (Figure 24). This position indicates No. 1 piston is at TDC of compression stroke and valves to be adjusted are closed. If rotor is out of place, turn crankshaft pulley clockwise one revolution (360 degrees).
4. Using a feeler gage, measure the valve lash at valves (1), (2), (5) and (7) (Figures 25 and 26).

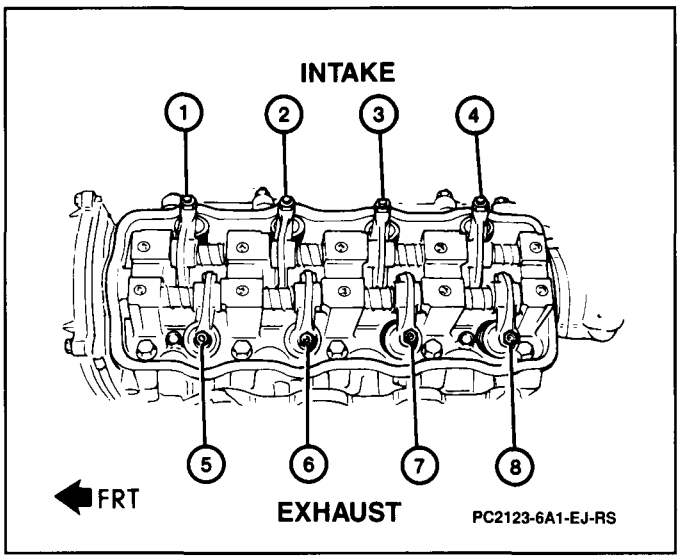

Figure 25 Valve Identification

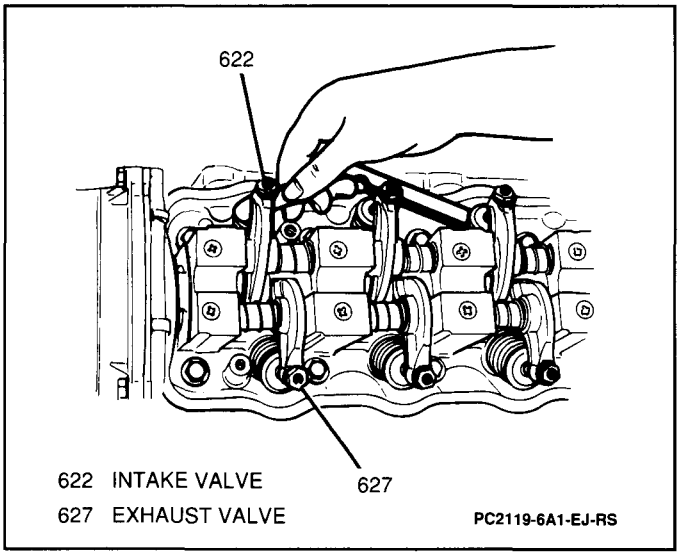

Figure 26 Measuring Valve Lash

5. If valve lash is out of specification, adjust it by loosening the adjusting screw locknut and turning the adjusting screw. After adjustment, hold the screw in position and tighten the locknut to specification.

Tighten

- Adjusting screw locknut to 17 N·m (13 lb.ft.).

6. Rotate crankshaft one revolution (360 degrees) clockwise and check valve lash at valves (3), (4), (6) and (8) (Figure 25).
7. If valve lash is out of specification, adjust it by loosening the adjusting screw locknut and turning the adjusting screw. After adjustment, hold the screw in position and tighten the locknut to specification.

Tighten

- Adjusting screw locknut to 17 N·m (13 lb.ft.).

8. Install the distributor cap on distributor.
9. Install the cylinder head cover. Refer to "Cylinder Head Cover" earlier in this section.

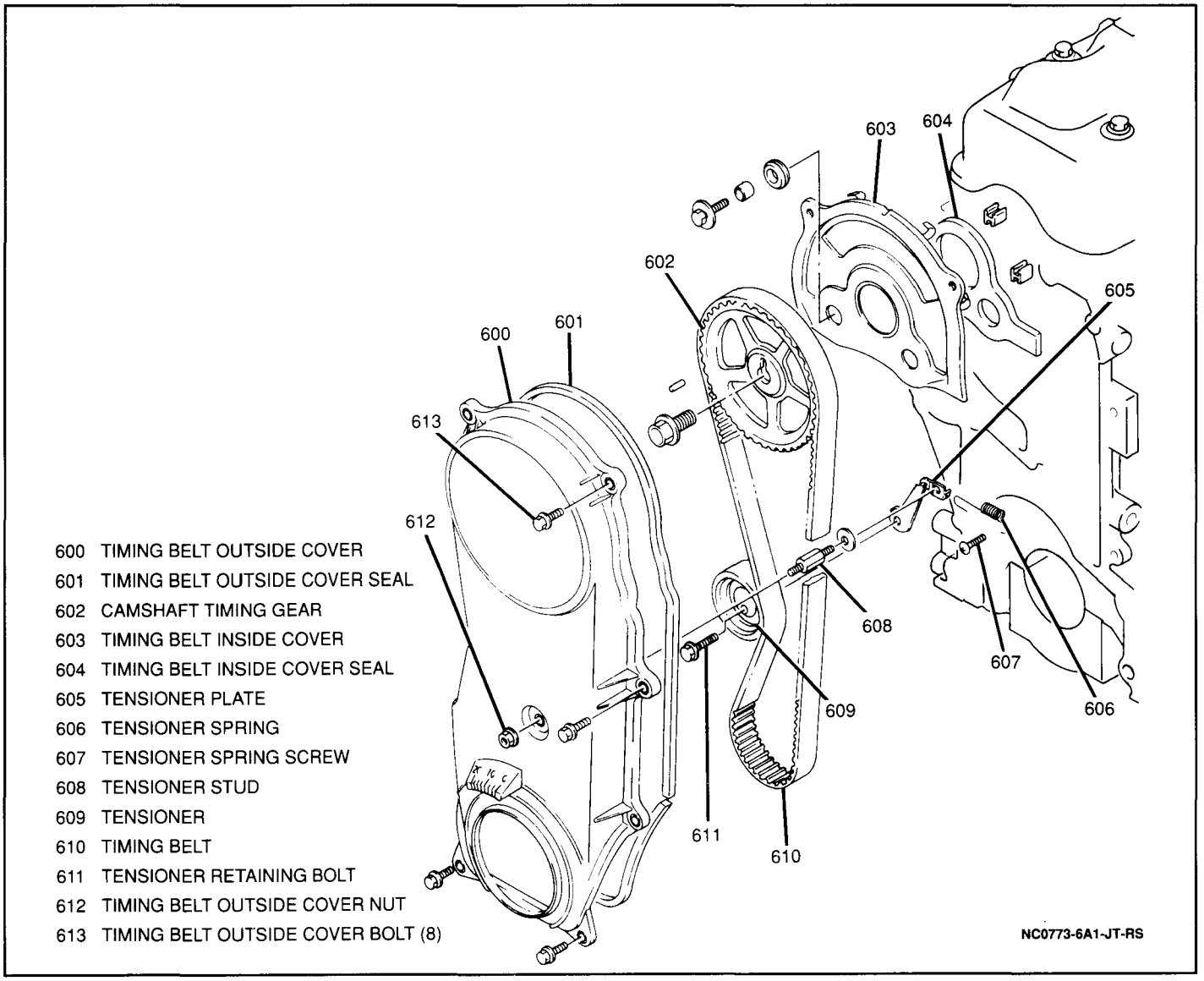

Figure 27 Timing Belt, Tensioner and Timing Belt Cover

TIMING BELT AND TENSIONER

Figures 27 through 36

Remove or Disconnect

1. Negative (-) battery cable.
- Loosen upper and lower A/C compressor mounting bolts (if equipped).
2. A/C compressor drive belt from pulleys (if equipped).
- Loosen upper and lower generator mounting bolts.
3. Generator/coolant pump drive belt from pulleys.
4. Four bolts securing shroud to radiator and four fan clutch mounting nuts.
5. Shroud, fan clutch and cooling fan together.
6. Five bolts and crankshaft pulley from crankshaft (Figure 28).

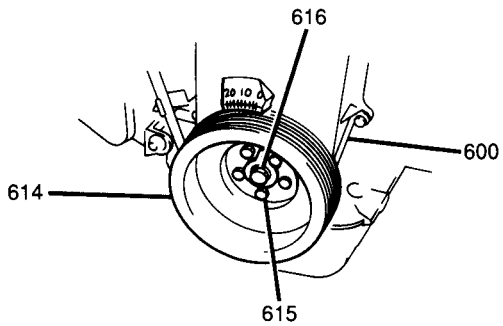

600 TIMING BELT OUTSIDE COVER
614 CRANKSHAFT PULLEY
615 CRANKSHAFT PULLEY BOLT (5)
616 CRANKSHAFT PULLEY CENTER BOLT NC0774-6A1-JT-RS

Figure 28 Crankshaft Pulley

Important

- It is not necessary to remove the crankshaft pulley center bolt when removing the crankshaft pulley.

7. Eight bolts, one nut and timing belt outside cover from engine.
- Loosen tensioner stud and remove tensioner spring from tensioner plate and tensioner spring screw (Figure 29).

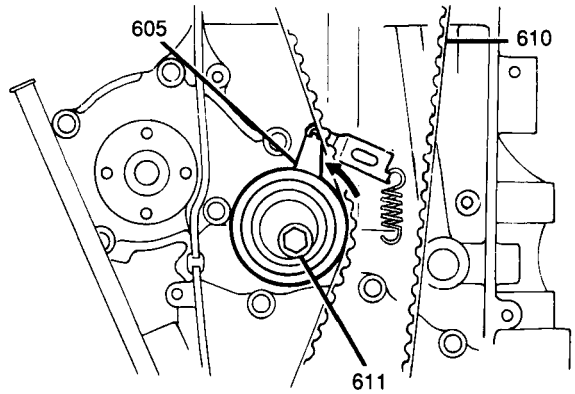

605 TENSIONER PLATE
610 TIMING BELT
611 TENSIONER RETAINING BOLT NC0775-6A1-JT-RS

Figure 29 Tensioner Assembly

8. Timing belt from crankshaft timing belt gear and camshaft timing gear by rotating tensioner plate counterclockwise.
9. Tensioner stud, tensioner washer, tensioner retaining bolt and tensioner with tensioner plate from engine.
10. Tensioner plate from tensioner.

Inspect

1. Timing belt for wear or cracking; replace if necessary.
2. Tensioner for smooth operation; replace if necessary.

Install or Connect

1. Tensioner plate to tensioner. Insert the tensioner plate lock tab into the tensioner slot (Figure 30).

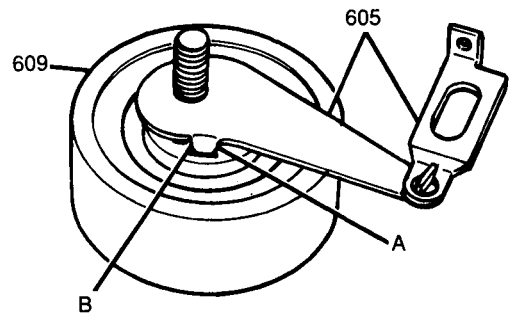

A TENSIONER SLOT
B TENSIONER PLATE LOCK TAB
605 TENSIONER PLATE
609 TENSIONER NC0776-6A1-JT-RS

Figure 30 Tensioner Lock Tab and Slot

2. Tensioner with tensioner plate to engine; secure with tensioner retaining bolt. Do not tighten fully.

Important

- Make sure that the tensioner plate and tensioner move in the same direction when the tensioner plate is moved counterclockwise (Figure 31). If there is no associated movement between the tensioner plate and the tensioner, remove the tensioner and tensioner plate and reinsert the tensioner plate lock tab into the tensioner slot, then reinstall.

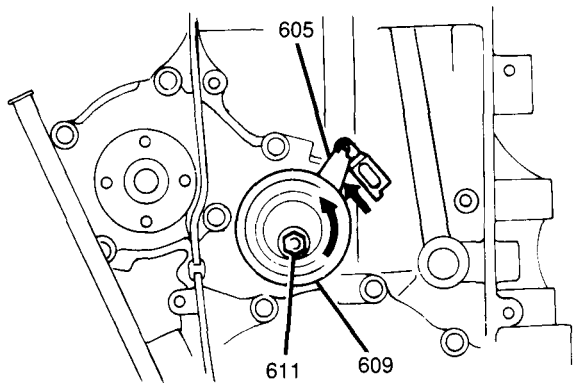

605 TENSIONER PLATE
609 TENSIONER
611 TENSIONER RETAINING BOLT NC0777-6A1-JT-RS

Figure 31 Timing Belt Tensioner Plate Movement

- Remove the cylinder head cover. Refer to "Cylinder Head Cover" earlier in this section.
- Loosen all valve lash adjusting screws and locknuts to prevent damage to valves (Figure 32).

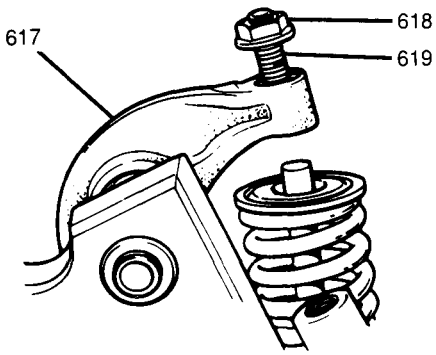

617 ROCKER ARM
618 LOCKNUT
619 VALVE LASH ADJUSTING SCREW NC0778-6A1-JT-RS

Figure 32 Valve Lash Adjusting Screw and Locknut

- Rotate the camshaft timing gear clockwise and align the camshaft timing gear timing mark with the "V" timing mark on the timing belt inside cover (Figure 33).

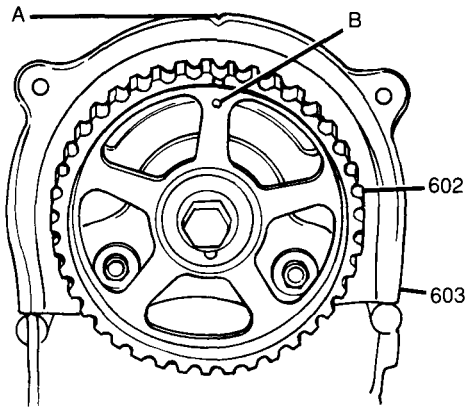

A "V" TIMING MARK
B CAMSHAFT TIMING GEAR TIMING MARK
602 CAMSHAFT TIMING GEAR
603 TIMING BELT INSIDE COVER NC0779-6A1-JT-RS

Figure 33 Camshaft "V" Timing Mark

- Rotate the crankshaft clockwise and align the punch mark on the crankshaft timing belt gear with the arrow timing mark on the oil pump. This places the No. 4 cylinder at TDC (Figures 34 and 35).

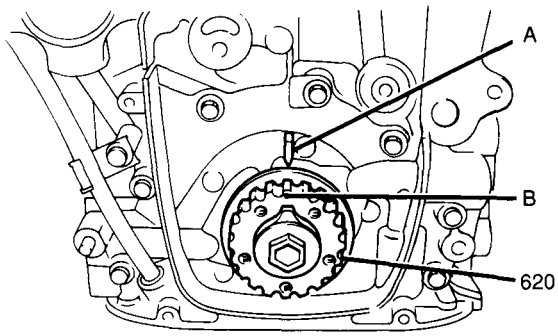

A ARROW TIMING MARK
B PUNCH MARK
620 CRANKSHAFT TIMING BELT GEAR NC0780-6A1-JT-RS

Figure 34 Crankshaft Timing Belt Pulley Marks

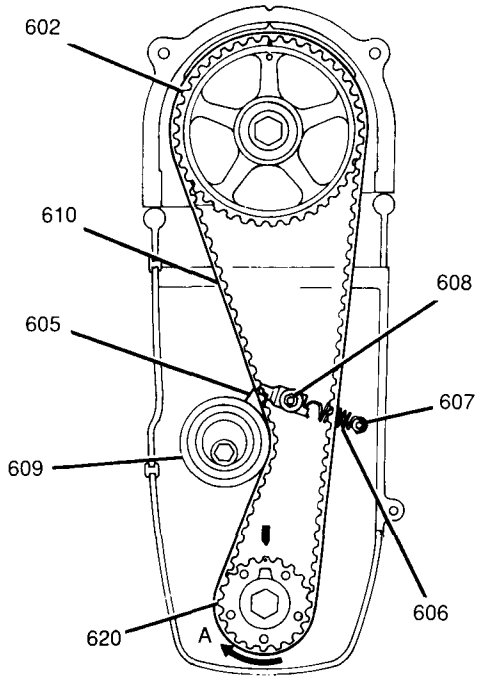

WITH TIMING MARKS ALIGNED AS SHOWN, #4 PISTON IS AT TOP DEAD CENTER OF ITS COMPRESSION STROKE.

A CRANKSHAFT TIMING BELT GEAR ROTATION DIRECTION
602 CAMSHAFT TIMING GEAR
605 TENSIONER PLATE
606 TENSIONER SPRING
607 TENSIONER SPRING SCREW
608 TENSIONER STUD
609 TENSIONER
610 TIMING BELT
620 CRANKSHAFT TIMING BELT GEAR PC2124-6A1-EJ-RS

Figure 35 Timing Belt Installation

3. Timing belt to camshaft timing gear and crankshaft pulley.

Important

- When installing timing belt, match the arrow mark on the timing belt to the rotation direction of the crankshaft pulley.
- The timing belt must be installed so that there is no slack on the right side of the timing belt.

4. Tensioner spring to tensioner plate and tensioner spring screw; secure tensioner plate with tensioner washer and tensioner stud. Do not tighten fully.

- Rotate the crankshaft clockwise two complete rotations.

Inspect

- Camshaft and crankshaft timing marks. If either one of these marks is not aligned properly, remove the timing belt and repeat the installation procedure.

Tighten

- Tensioner stud to 11 N·m (97 lb.in.).
- Tensioner bolt to 27 N·m (20 lb.ft.).

Adjust

- Valve lash. Refer to "Valve Lash" earlier in this section.

5. Cylinder head cover. Refer to "Cylinder Head Cover" earlier in this section.
6. Timing belt outside cover; secure with eight bolts and one nut.

Tighten

- Timing belt outside cover bolts and nut to 10 N·m (89 lb.in.).

7. Crankshaft pulley to crankshaft, fitting pulley key way to key on the crankshaft; secure with five bolts (Figure 36).

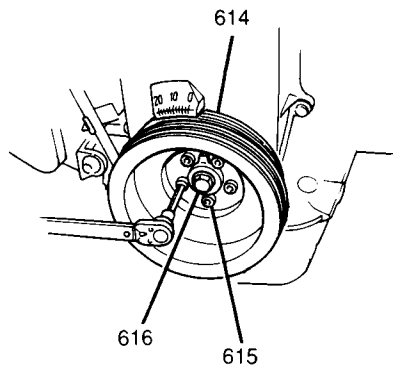

614 CRANKSHAFT PULLEY
615 CRANKSHAFT PULLEY BOLT
616 CRANKSHAFT PULLEY CENTER BOLT PC2125-6A1-EJ-RS

Figure 36 Installing Crankshaft Pulley

Tighten

- Crankshaft pulley bolts to 16 N·m (12 lb.ft.).

8. Fan clutch, cooling fan and shroud; secure with four fan clutch nuts and four shroud bolts.

Tighten

- Fan clutch nuts to 11 N·m (97 lb.in.).
- Shroud bolts to 11 N·m (97 lb.in.).

9. Generator/coolant pump drive belt to pulleys.

Adjust

- Generator/coolant pump drive belt tension. Refer to SECTION 6B.

10. A/C compressor drive belt to pulleys (if equipped).

Adjust

- A/C compressor drive belt tension (if equipped). Refer to SECTION 1B.

11. Negative (-) battery cable.

Tighten

- Negative (-) battery cable-to-negative (-) battery terminal retainer to 15 N·m (11 lb.ft.).

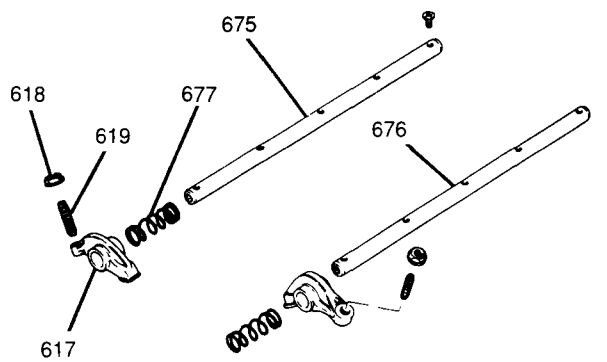

617 ROCKER ARM
618 LOCKNUT
619 VALVE LASH ADJUSTING SCREW
675 INTAKE ROCKER ARM SHAFT
676 EXHAUST ROCKER ARM SHAFT
677 ROCKER ARM SPRING PC2126-6A1-EJ-RS

Figure 37 Rocker Arms and Rocker Arm Shafts

ROCKER ARMS AND ROCKER ARM SHAFTS

Figures 12 through 15, 18 and 37 through 41

Remove or Disconnect

- Release fuel pressure. Refer to SECTION 6C.

1. Negative (-) battery cable.
2. Fuel filler cap to release fuel vapor pressure in fuel tank. After releasing pressure, replace cap.
3. Air cleaner (ACL). Refer to "Air Cleaner (ACL)" earlier in this section.

- Drain coolant from radiator. Refer to SECTION 6B.

4. Accelerator cable and kickdown cable (automatic transmission equipped vehicles) from TBI unit (Figure 12).
5. The following electrical connectors:
   - Throttle position (TP) sensor.
   - Idle air control (IAC) valve.
   - Throttle opener solenoid vacuum (TO SV) valve.
   - Manifold absolute pressure (MAP) sensor.
   - Intake air temperature (IAT) sensor (Figure 13).
   - Engine coolant temperature (ECT) sensor (Figure 13).
   - ECT sensor sending unit (Figure 13).
   - A/C ECT switch (A/C equipped vehicles only).
   - Exhaust gas recirculation (EGR) temperature sensor (California specification vehicles).
   - Wiring harness from retaining clamps.
   - Engine ground wire from intake manifold.
6. The following vacuum hoses:
   - TO SV valve (Figure 14).
   - Solenoid purge (SP) valve (Figure 14).
   - EGR valve.
7. Coolant hose from the IAC valve.
8. IAC air hose from IAC valve.
9. Fuel feed pipe from TBI unit and intake manifold (Figure 15).
10. Fuel return hose from fuel pressure (FPR) regulator (Figure 15).
11. Positive crankcase ventilation (PCV) hose from PCV valve.
12. MAP sensor hose and brake booster hose from intake manifold.
13. Coolant hose from thermostat housing.
14. Coolant bypass and heater inlet hoses from intake manifold.
15. PCV valve, EGR valve, ECT sensor, ECT sending unit, A/C ECT switch (A/C equipped vehicles only) and EGR temperature sensor (California specification vehicles) from intake manifold, if required.
16. Two bolts and A/C compressor flexible hose from radiator (if equipped). Reposition toward rear of engine.
17. Timing belt. Refer to "Timing Belt and Tensioner" earlier in this section.
18. A/C compressor upper support bracket (if equipped). Refer to SECTION 1B.
19. Oxygen sensor (O2S) electrical connector (Figure 18).
20. Three nuts and upper exhaust manifold cover from exhaust manifold (Figure 18).
21. Three bolts and lower exhaust manifold cover from exhaust manifold (Figure 18).
22. Two engine mount-to-exhaust bracket bolts, one exhaust bracket-to-exhaust manifold nut and exhaust bracket from vehicle.
23. Three bolts and front pipe/three way catalytic converter (TWC) assembly, with gasket, from exhaust manifold (Figure 19).
24. Four bolts and cylinder head cover.

- Loosen all valve lash adjusting screw locknuts and screws to allow all valves to close.

25. Camshaft timing gear by inserting a 9.0 mm (0.35-inch) diameter rod into hole of camshaft to lock camshaft and remove camshaft timing gear bolt and camshaft timing gear (Figure 38).

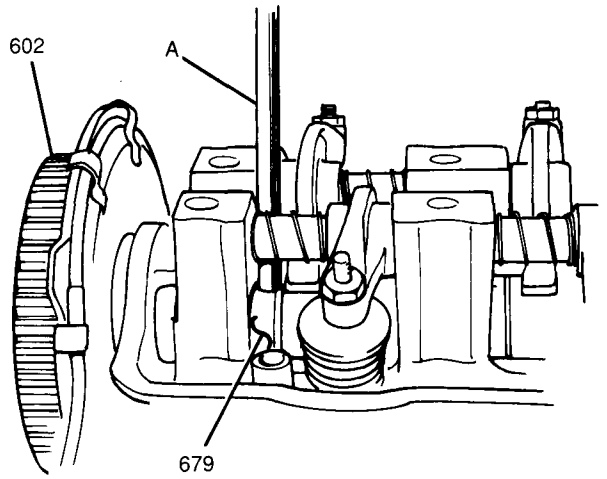

A 9 mm (0.35") SHAFT
602 CAMSHAFT TIMING GEAR
679 CAMSHAFT
PC2128-6A1-EJ-RS

Figure 38 Locking the Camshaft

26. Ten rocker arm shaft screws, intake and exhaust rocker arm shafts, rocker arms and springs (Figures 39 and 40).

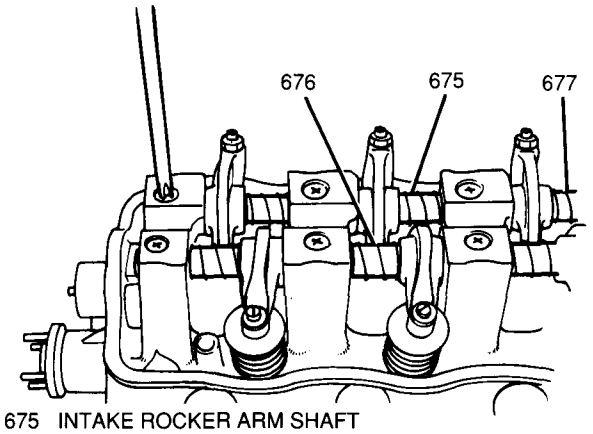

675 INTAKE ROCKER ARM SHAFT
676 EXHAUST ROCKER ARM SHAFT
677 ROCKER ARM SPRING
PC2129-6A1-EJ-RS

Figure 39 Removing Rocker Arm Shaft Screws

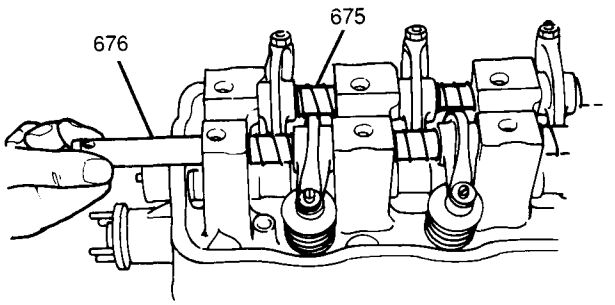

675 INTAKE ROCKER ARM SHAFT
676 EXHAUST ROCKER ARM SHAFT
PC2130-6A1-EJ-RS

Figure 40 Removing Rocker Arm Shafts

Important

- Keep all of the parts in the order of removal to ensure installation in the correct location.

Install or Connect

Important

- The intake and exhaust rocker arm shafts are different and must be installed correctly into the cylinder head.
- To distinguish between the two, the dimensions of the stepped side of each shaft are different (Figure 41).

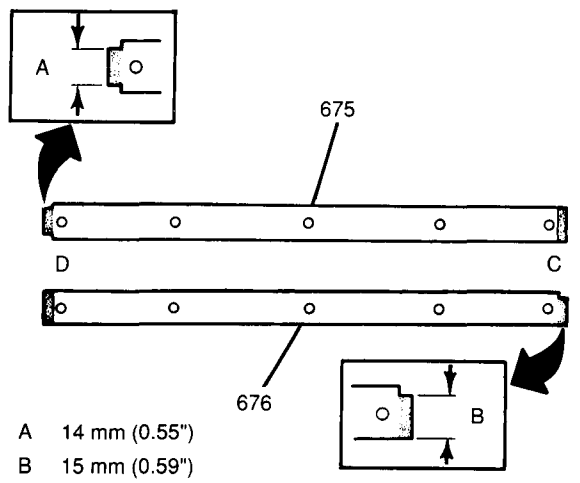

A 14 mm (0.55")
B 15 mm (0.59")
C DISTRIBUTOR SIDE
D CAMSHAFT PULLEY SIDE
675 INTAKE ROCKER ARM SHAFT
676 EXHAUST ROCKER ARM SHAFT
PC2131-6A1-EJ-RS

Figure 41 Rocker Arm Shaft Identification

- The intake rocker arm shaft must be installed with the stepped side toward the camshaft timing gear.
- The exhaust rocker arm shaft must be installed with the stepped side toward the distributor gear case.

1. Intake and exhaust rocker arm shafts, rocker arms and springs after applying a thin coat of oil to all surfaces; secure with ten rocker arm shaft screws.

Tighten

- Rocker arm shaft screws to 11 N·m (97 lb.in.).

2. Camshaft timing gear by fitting pin on camshaft into slot on the camshaft timing gear. Lock camshaft by inserting a 9.0 mm (0.35-inch) diameter rod into hole in camshaft. Secure with camshaft timing gear bolt.

Tighten

- Camshaft timing gear bolt to 60 N·m (44 lb.ft.).

3. A/C compressor upper support bracket. Refer to SECTION 1B.
4. Timing belt. Refer to "Timing Belt and Tensioner" earlier in this section.
5. A/C compressor flexible hose (if equipped) to top right corner of radiator; secure with two bolts.

Tighten

- A/C compressor flexible hose mounting bolts to 10 N·m (89 lb.in.).

6. Front pipe/TWC assembly, with new gasket, to exhaust manifold; secure with three bolts.

Tighten

- Exhaust manifold-to-front pipe/TWC assembly to 50 N·m (37 lb.ft.).

7. Exhaust bracket to exhaust manifold; secure with two engine mount-to-exhaust bracket bolts and one exhaust bracket-to-exhaust manifold nut.

Tighten

- Engine mount-to-exhaust bracket bolts to 55 N·m (40 lb.ft.).
- Exhaust bracket-to-exhaust manifold nut to 50 N·m (37 lb.ft.).

8. Upper exhaust manifold cover to exhaust manifold; secure with three nuts.
9. Lower exhaust manifold cover to exhaust manifold; secure with three bolts.

Tighten

- Exhaust manifold cover nuts and bolts to 11 N·m (97 lb.in.).

10. Positive crankcase ventilation (PCV) valve, EGR valve, ECT sensor, ECT sending unit, A/C ECT switch (A/C equipped vehicles only) and EGR temperature sensor (California specification vehicles) to intake manifold.
11. Coolant hose to the IAC valve.
12. IAC air hose to IAC valve.
13. Fuel feed pipe to TBI unit and intake manifold (Figure 15).
14. Fuel return hose to fuel pressure (FPR) regulator (Figure 15).
15. PCV hose to PCV valve.
16. MAP sensor hose and brake booster hose to intake manifold.
17. Coolant hose to thermostat housing.
18. Coolant bypass and heater inlet hoses to intake manifold.
19. The following electrical connectors:
    - TP sensor.
    - IAC valve.
    - TO SV valve.
    - MAP sensor.
    - IAT sensor.
    - ECT sensor.
    - ECT sensor sending unit.
    - A/C ECT switch (A/C equipped vehicles only).
    - EGR temperature sensor (California specification vehicles).
    - Wiring harness to retaining clamps.
    - Engine ground wire to intake manifold.
20. The following vacuum hoses:
    - TO SV valve.
    - SP valve.
    - EGR valve.
21. Negative (-) battery cable.

Tighten

- Negative (-) battery cable-to-negative (-) battery terminal retainer to 15 N·m (11 lb.ft.).

- Inspect engine oil level; add oil as necessary. Refer to SECTION 0B.
- Refill engine cooling system. Refer to SECTION 6B.

Inspect

- Upon completion of installation, check coolant system for coolant leaks. After completing that inspection, start engine and check exhaust system for exhaust leaks and check oil pressure. Refer to SECTIONS 6B, 6F and 6, respectively.

Rocker Arms and Rocker Arm Shafts Off-Vehicle Service

Figures 42, 43 and 44

Inspect

1. Tip of adjusting screws. If any screw is badly worn, replace screw (Figure 42).

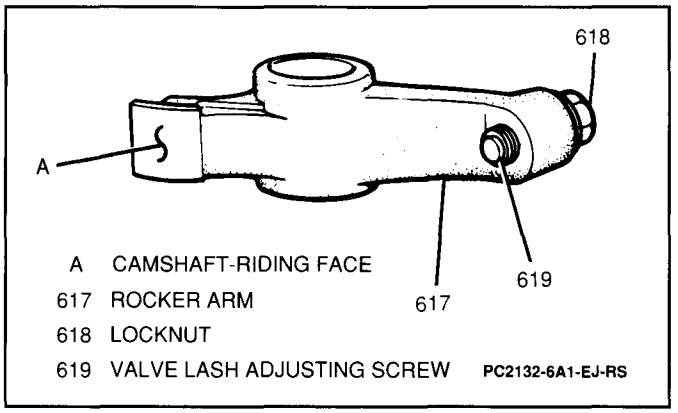

Figure 42 Rocker Arm and Valve Lash Adjusting Screw Inspection

2. Camshaft riding faces of rocker arms (Figure 42). If any camshaft riding face is badly worn or pitted, replace the rocker arm.

Measure

Tools Required:
J 8001 Dial Indicator
J 26900-1 Outside Micrometer
J 26900-13 Magnetic Base

1. Intake and exhaust rocker arm shaft runout using a J 8001 and J 26900-13. Runout limit is 0.12 mm (0.004-inch) (Figure 43).

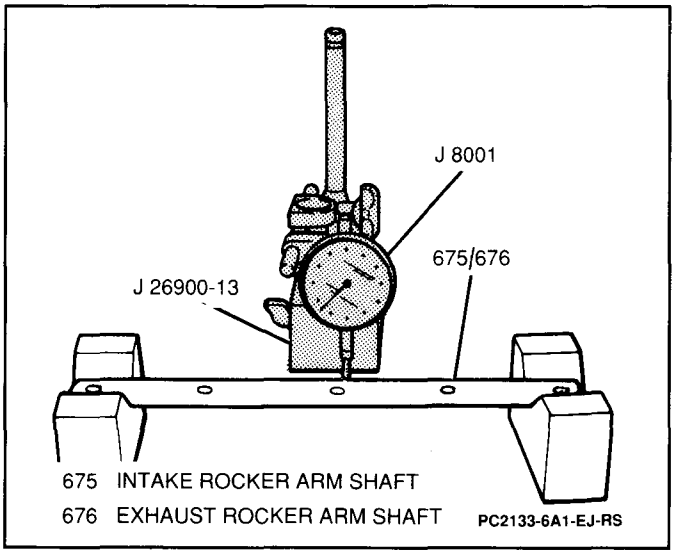

Figure 43 Measuring Rocker Arm Shaft Runout

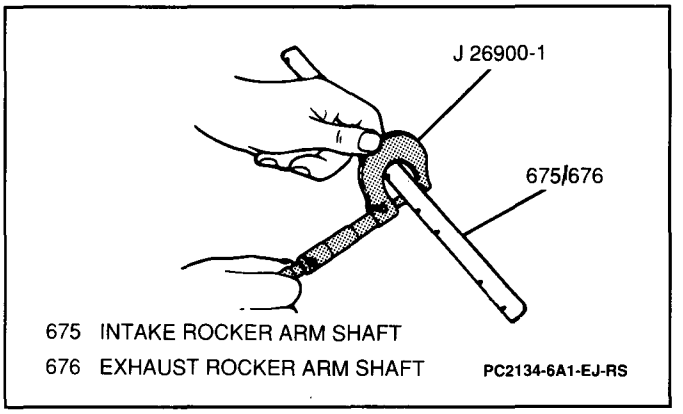

Figure 44 Measuring Rocker Arm Shaft Diameter

2. Intake and exhaust rocker arm shaft diameter at rocker arm locations using a J 26900-1. Shaft diameter standards are 15.973 to 15.988 mm (0.628 to 0.629-inch). Record measurements (Figure 44).
3. Rocker arm inner diameter using a telescoping micrometer. Inner diameter standards are 16.000 to 16.018 mm (0.629 to 0.630-inch). Record measurement.

- Subtract shaft diameter from inner diameter to obtain arm-to-shaft clearance.
- Arm-to-shaft clearance limit is 0.012 to 0.045 mm (0.0005 to 0.0017-inch) with a maximum limit of 0.09 mm (0.0035-inch).
- If arm-to-shaft clearance is not within specifications limits, replace the rocker arm shaft and/or rocker arm.

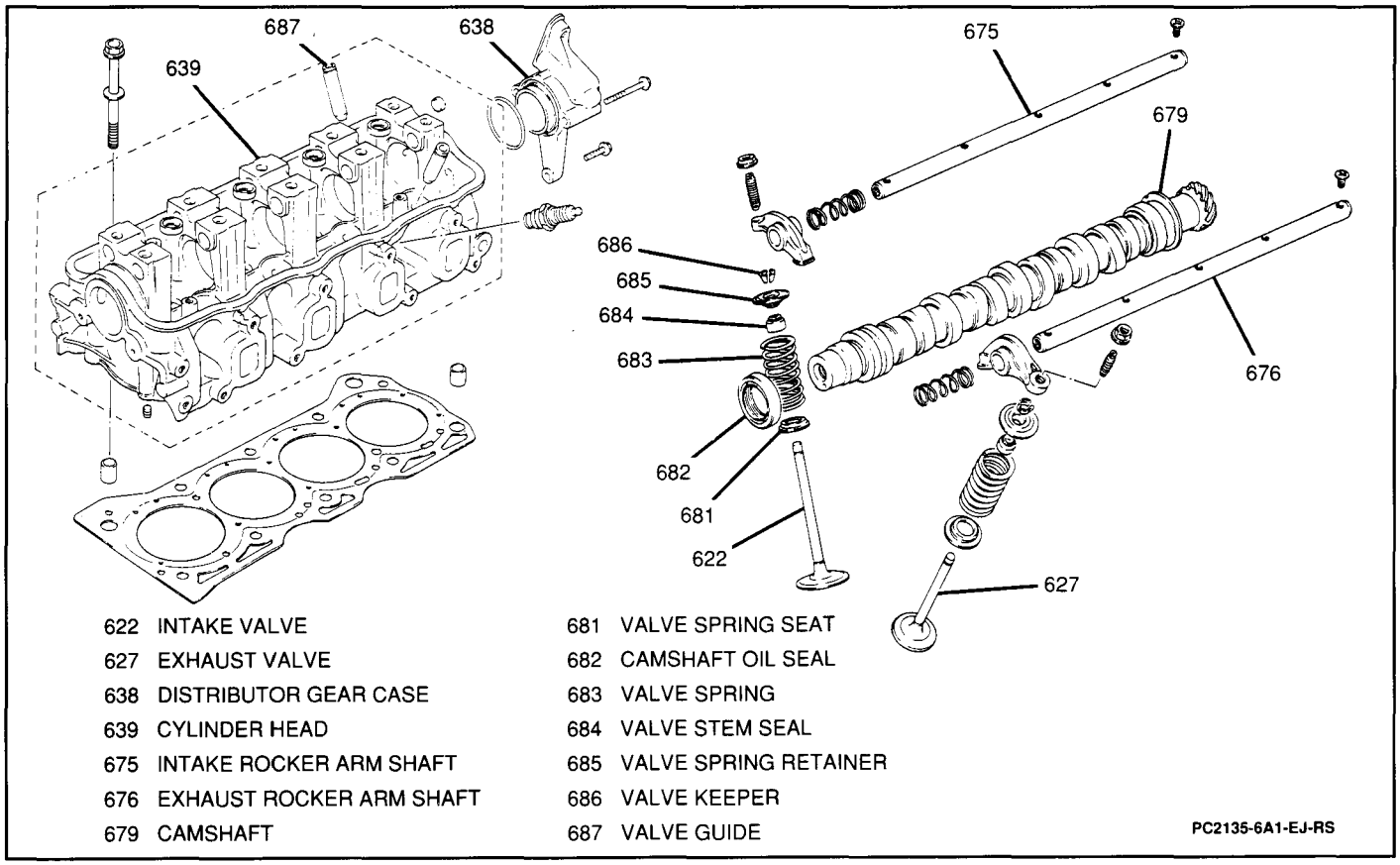

Figure 45 Camshaft, Valves, Valve Springs and Cylinder Head

CAMSHAFT, VALVES AND CYLINDER HEAD

Figures 13, 14, 20, 21, 28, 29, 33, 34, 35, 45 and 46

Remove or Disconnect

- Relieve fuel pressure. Refer to SECTION 6C.
1. Negative (-) battery cable.
- Drain the engine cooling system. Refer to SECTION 6B.
2. Fuel filler cap to release fuel vapor pressure in fuel tank. After releasing pressure, replace cap.
3. Air intake case. Refer to "Air Intake Case" earlier in this section.
4. Accelerator cable and kickdown cable (automatic transmission equipped vehicles) from throttle body fuel injection (TBI) unit.
5. PCV valve hose from cylinder head cover.
6. The following electrical connectors:
   - Throttle position (TP) sensor.
   - Idle air control (IAC) valve.
   - Throttle opener solenoid vacuum (TO SV) valve.
   - Oxygen sensor (O2S).
   - Intake air temperature (IAT) sensor (Figure 13).
   - Manifold absolute pressure (MAP) sensor.
   - Engine coolant temperature (ECT) sensor (Figure 13).
   - ECT sensor sending unit (Figure 13).
   - A/C ECT switch (A/C equipped vehicles only).
   - Ground wires from distributor case.
   - EGR temperature sensor (California specification vehicles).
   - Wiring harness from retaining clamps.
   - Engine ground wire from intake manifold.
7. The following vacuum hoses:
   - TO SV valve (Figure 14).
   - Solenoid purge (SP) valve (Figure 14).
   - EGR valve.
8. Coolant hose from IAC valve.
9. IAC air hose from IAC valve.
10. Fuel feed pipe from TBI unit and intake manifold.
11. Fuel return hose from fuel pressure regulator.
12. PCV hose from PCV valve.
13. MAP sensor hose and brake booster hose from intake manifold.
- Raise and suitably support vehicle. Refer to SECTION 0A.
14. Two lower shroud bolts.
15. Two bolts and front pipe/three way catalytic converter (TWC) from exhaust manifold.
- Lower vehicle.
16. Two bolts and A/C compressor flexible hose from radiator (if equipped) and reposition to the rear.
17. Coolant hose from radiator after loosening hose clamp and sliding back on hose.
18. Two upper bolts securing shroud to radiator and four fan clutch mounting nuts.
19. Shroud, fan clutch and cooling fan together.
20. A/C compressor drive belt from pulleys (if equipped).

21. Generator/coolant pump drive belt from pulleys.
22. Four nuts and coolant pump pulley with cooling fan from coolant pump.
23. Five bolts and crankshaft pulley from crankshaft (Figure 28).

Important

- It is not necessary to remove the crankshaft pulley center bolt when removing the crankshaft pulley.

24. Eight bolts, one nut and timing belt outside cover from engine.
- Rotate crankshaft to align timing marks.
- Loosen tensioner stud and remove tensioner spring from tensioner plate and tensioner spring screw (Figure 29).

25. Timing belt from crankshaft pulley and camshaft timing gear by rotating tensioner plate counterclockwise.
- Loosen upper and lower A/C compressor mounting bolts (if equipped).

26. Oil pressure switch electrical connector and lead wire from retaining clamp.
27. Ground wire from intake manifold.
28. Coolant bypass and heater inlet hoses from intake manifold.
29. Two bolts and intake manifold support from intake manifold.
30. Starter motor electrical connector.
31. Two engine mount-to-exhaust bracket bolts and exhaust bracket from vehicle.
32. Secondary (spark plug) wires from spark plugs and retainer on cylinder head cover (Figure 20).
33. Spark plugs. Refer to SECTION 0A.
34. Four bolts and cylinder head cover from cylinder head (Figure 21).
35. Cylinder head cover gasket from cylinder head.
- Loosen all valve adjusting screw locknuts and screws to allow all valves to close.

36. Ten bolts from cylinder head in order shown, starting at center and working outward while alternating ends to prevent distortion.
37. Cylinder head and cylinder head gasket from cylinder block with distributor gear case, exhaust manifold and intake manifold.
38. Three bolts and distributor gear case from cylinder head.
39. Five bolts, four nuts and intake manifold from cylinder head.
40. Three nuts and upper exhaust manifold cover from exhaust manifold.
41. Three bolts and lower exhaust manifold cover from exhaust manifold.
42. Five bolts, two nuts and exhaust manifold from cylinder head.

Inspect

- For cylinder head inspection procedures, refer to "Cylinder Head and Valve Off-Vehicle Service" later in this section.

Clean

1. Mating surfaces of cylinder head, cylinder block, intake manifold, exhaust manifold and distributor gear case of all gasket or sealant materials.
2. All bolt threads and bolts.
- Lubricate all bolts and threads in cylinder head and cylinder block with engine oil.

Install or Connect

1. Intake manifold to cylinder head; secure with five bolts and four nuts. Do not tighten fully.
2. Exhaust manifold to cylinder head; secure with five bolts and two nuts.

Tighten

- Intake and exhaust manifold bolts and nuts to 23 N·m (17 lb.ft.).

3. Upper exhaust manifold cover to exhaust manifold; secure with three nuts.
4. Lower exhaust manifold cover to exhaust manifold; secure with three bolts.

Tighten

- Exhaust manifold cover nuts and bolts to 11 N·m (97 lb.in.).

5. Cylinder head gasket to cylinder block.

NOTICE: The cylinder head gasket must be installed only one way. The gasket is marked "TOP" and this mark should face upward toward the crankshaft pulley side.

6. Cylinder head assembly to cylinder block; secure with ten bolts.

Tighten

- Cylinder head bolts in three or four passes following sequence to 73 N·m (54 lb.ft.) (Figure 46).

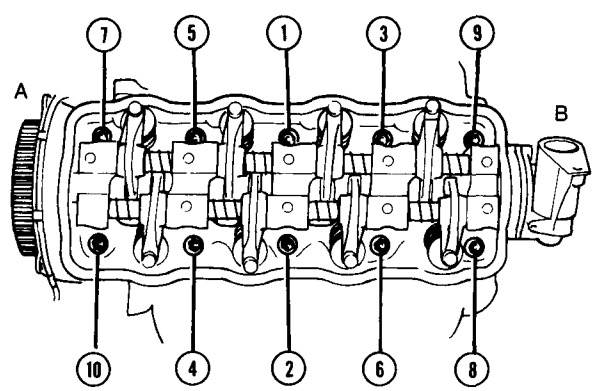

A CAMSHAFT PULLEY SIDE
B DISTRIBUTOR SIDE
PC0849-6A-EJ-RS

Figure 46 Cylinder Head Tightening Sequence

7. Intake manifold support to intake manifold; secure with two bolts.

Tighten

- Intake manifold support bolts to 23 N·m (17 lb.ft.).

8. Exhaust bracket to vehicle; secure with two engine mount-to-exhaust bracket bolts and one nut.

Tighten

- Engine mount-to-exhaust bracket bolts to 55 N·m (40 lb.ft.).
- Exhaust bracket-to-exhaust manifold nut to 50 N·m (37 lb.ft.).

9. Coolant bypass and heater inlet hoses to intake manifold; secure with hose clamps.
10. Generator upper mounting bracket extension to intake manifold and generator. Refer to SECTION 6D2.
11. Starter motor electrical connector.
12. Ground wire to intake manifold.
13. Oil pressure switch electrical connector and lead wire to retaining clamp.

- Rotate the camshaft timing gear clockwise and align the camshaft timing gear timing mark with the "V" timing mark on the timing belt inside cover (Figure 33).
- Rotate the crankshaft clockwise and align the punch mark on the crankshaft timing belt gear with the arrow timing mark on the oil pump. This places the No. 4 cylinder at TDC (Figures 34 and 35).

14. Timing belt to camshaft timing gear and crankshaft pulley.

Important

- When installing timing belt, match the arrow mark on the timing belt to the rotation direction of the crankshaft pulley.
- The timing belt must be installed so that there is no slack on the right side of the timing belt.

15. Tensioner spring to tensioner plate and tensioner spring screw; secure tensioner plate with tensioner washer and tensioner stud. Do not tighten fully.

- Rotate the crankshaft clockwise two complete rotations.

Inspect

- Camshaft and crankshaft timing marks. If either one of these marks is not aligned properly, remove the timing belt and repeat the installation procedure.

Tighten

- Tensioner stud to 11 N·m (97 lb.in.).
- Tensioner bolt to 27 N·m (20 lb.ft.).

16. Distributor gear case with new gasket to cylinder head; secure with three bolts.

Tighten

- Distributor gear case bolts to 10 N·m (89 lb.in.).

Adjust

- Valve lash. Refer to "Valve Lash" earlier in this section.

17. Timing belt outside cover to engine; secure with eight bolts and one nut.

Tighten

- Timing belt outside cover bolts and nut to 10 N·m (89 lb.in.).

18. Crankshaft pulley to crankshaft, fitting pulley key way to key on the crankshaft; secure with five bolts.

Tighten

- Crankshaft pulley bolts to 16 N·m (12 lb.ft.).

19. Coolant pump pulley to coolant pump; secure with four nuts.

Tighten

- Coolant pump pulley nuts to 24 N·m (18 lb.ft.).

20. Fan clutch, cooling fan and shroud; secure with four fan clutch nuts and two upper shroud bolts.

Tighten

- Fan clutch nuts to 11 N·m (97 lb.in.).
- Shroud bolts to 11 N·m (97 lb.in.).

21. Generator/coolant pump drive belt to pulleys.

Adjust

- Generator/coolant pump drive belt tension. Refer to SECTION 6B.

22. A/C compressor drive belt to pulleys (if equipped).

Adjust

- A/C compressor drive belt tension (if equipped). Refer to SECTION 1B.

23. Coolant hose to radiator.
24. A/C compressor flexible hose (if equipped) to top right corner of radiator; secure with two bolts.

Tighten

- A/C compressor flexible hose mounting bolts to 10 N·m (89 lb.in.).

- Raise and suitably support vehicle. Refer to SECTION 0A.

25. Front pipe/TWC to exhaust manifold; secure with two bolts.

Tighten

- Front pipe/TWC assembly-to-exhaust manifold bolts to 50 N·m (37 lb.ft.).

26. Two lower shroud bolts.

Tighten

- Shroud bolts to 11 N·m (97 lb.in.).

- Lower vehicle.

27. Cylinder head cover, with new gasket, to cylinder head; secure with four nuts.

Tighten

- Cylinder head cover nuts to 5 N·m (44 lb.in.).

28. Coolant hose to the IAC valve.
29. IAC air hose to IAC valve.
30. Fuel feed pipe to TBI unit and intake manifold.
31. Fuel return hose to fuel pressure regulator.
32. PCV hose to PCV valve.
33. MAP sensor hose and brake booster hose to intake manifold.
34. The following electrical connectors:
    - TP sensor.
    - IAC valve.
    - TO SV valve.
    - O2S.
    - IAT sensor.
    - MAP sensor.
    - ECT sensor.
    - ECT sensor sending unit.
    - A/C ECT switch (A/C equipped vehicles).
    - EGR temperature sensor (California specification vehicles).
    - Wiring harness to retaining clamps (Figure 16).
35. The following vacuum hoses:
    - TO SV valve.
    - SP valve.
    - EGR valve.
36. Accelerator cable and kickdown cable (automatic transmission equipped vehicles) to TBI unit.

Adjust

- Accelerator cable and kickdown cable (automatic transmission equipped vehicles). Refer to SECTION 6C.

37. Secondary (spark plug) wires to spark plugs and retainer on cylinder head cover.
38. PCV valve hose to cylinder head cover.
39. Air intake case. Refer to "Air Intake Case" earlier in this section.
40. Negative (-) battery cable.

Tighten

- Negative (-) battery cable-to-negative (-) battery terminal retainer to 15 N·m (11 lb.ft.).

- Refill radiator according to specifications. Refer to SECTION 6B.

Inspect

- Fuel system for fuel leaks. Refer to SECTION 6C.
- Exhaust system for exhaust leaks. Refer to SECTION 6F.
- Coolant system for coolant leaks. Refer to SECTION 6B.
- Oil pressure. Refer to SECTION 6.

Cylinder Head and Valve Off-Vehicle Service

Cylinder Head Disassembly

Figures 47 through 51

Remove or Disconnect

Tools Required:
J 37979 Valve Spring Compressor Adaptor
J 8062 Valve Spring Compressor
J 34833 Valve Guide Remover

Important

- Keep all disassembled parts, except valve stem seals and valve guides (which must be replaced), in order by cylinder so they can be installed in their original position.

1. Ten screws and rocker arm shafts, springs and rocker arms.
2. Camshaft from cylinder head by sliding out at flywheel end (Figure 47).

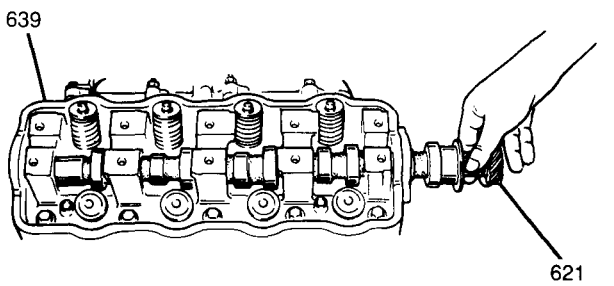

621 CAMSHAFT
639 CYLINDER HEAD
PC2136-6A1-EJ-RS

Figure 47 Removing Camshaft

- Using a J 8062 with a J 37979, compress valve springs and remove valve keepers from valve (Figures 48 and 49).

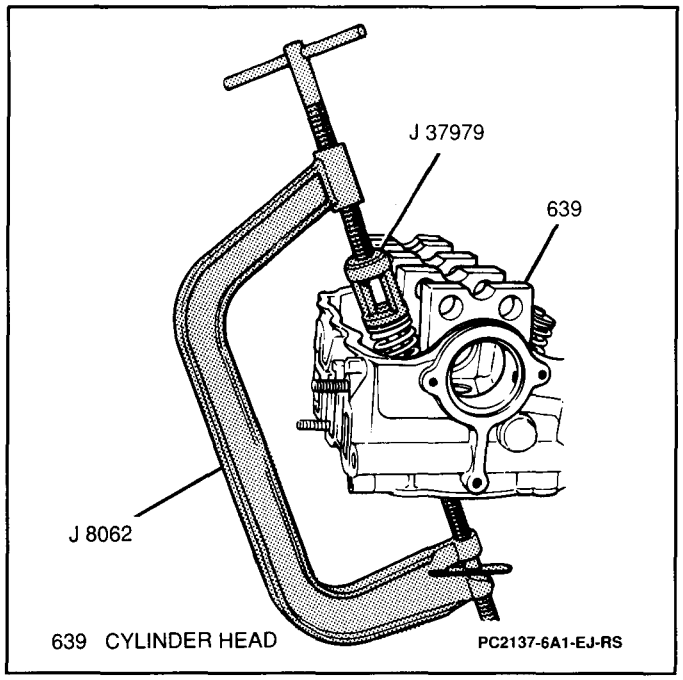

Figure 48 Compressing Valve Springs

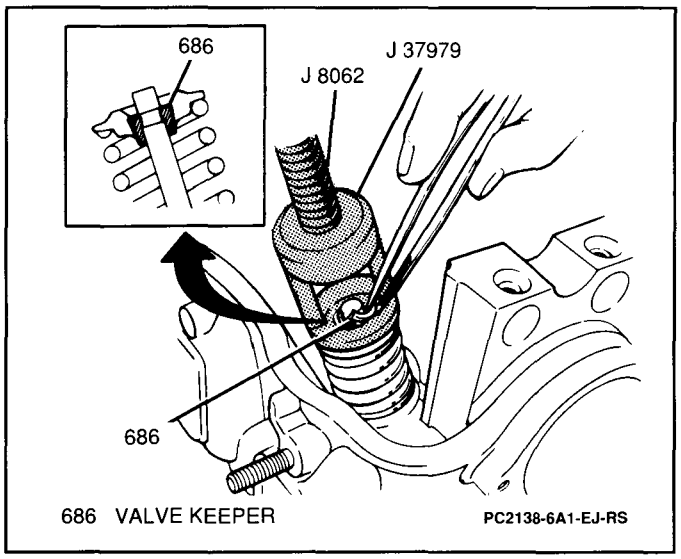

Figure 49 Removing Valve Keepers

- Release and remove the J 8062 and J 37979.

Important

- Do not reuse valve stem seal once disassembled. Be sure to use new seal when reassembling.

3. Valve spring retainer, valve spring, valve from combustion chamber side, valve spring seat and valve stem oil seal from cylinder head (Figure 50).

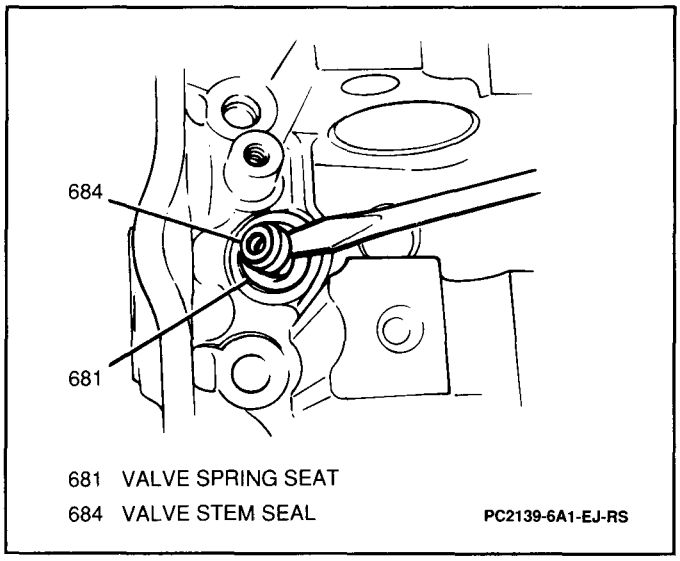

Figure 50 Removing Valve Stem Oil Seal and Valve Spring Seat

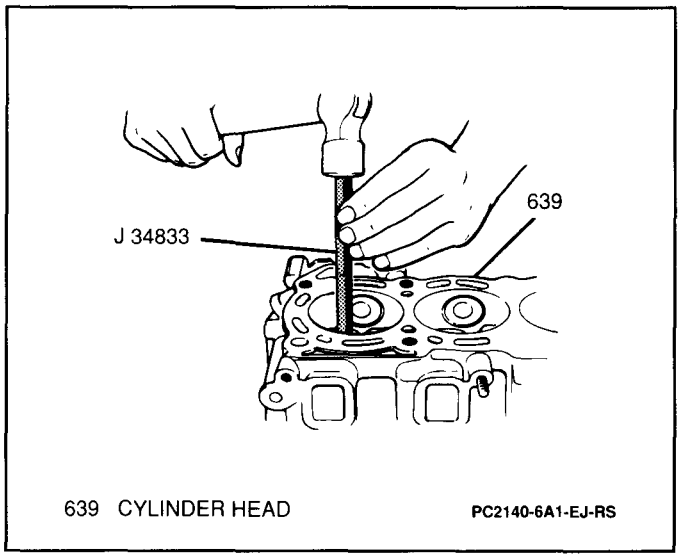

Figure 51 Removing Valve Guide

- Using a J 34833, drive valve guide out from combustion chamber side to valve spring side (Figure 51).

Important

- Do not reuse valve guide once disassembled. Be sure to use new valve guide when reassembling.

- Repeat procedure for remaining valve assemblies as required.

Cylinder Head Assembly

Figures 52, 53 and 54

Important

- Be sure that all cylinder head parts are reinstalled in the same cylinder they were removed from.

Install or Connect

Tools Required:
J 34834 Valve Guide Installer
J 8062 Valve Spring Compressor
J 37979 Valve Spring Compressor Adaptor

1. New valve guide to cylinder head. Refer to "Valve Guide Installation" later in this section.
2. Valve spring seat to cylinder head.
3. New oil seal to valve guide. After applying engine oil to oil seal and spindle of J 34834, fit oil seal to spindle, then install oil seal to valve guide by pushing J 34834 by hand. After installing, check to be sure that oil seal is properly fitted to valve guide (Figure 52).

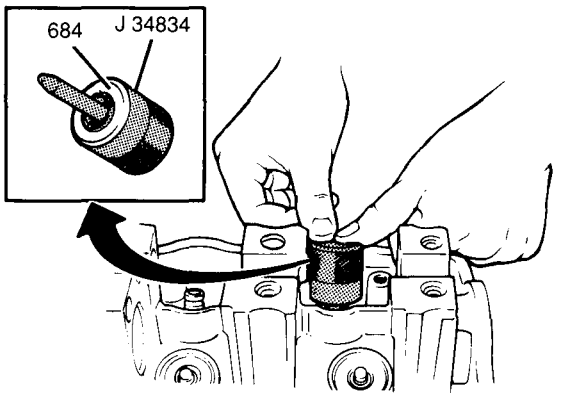

684 VALVE STEM SEAL PC2141-6A1-EJ-RS

Figure 52 Installing Valve Stem Oil Seal

NOTICE: When installing, never tap or hit the J 34834 with a hammer. Install oil seal to guide by pushing the J 34834 by hand only. Tapping or hitting tool may cause damage to the oil seal.

4. Valve to valve guide. Before installing valve to valve guide, apply engine oil to oil seal, valve guide bore and valve stem (Figure 53).

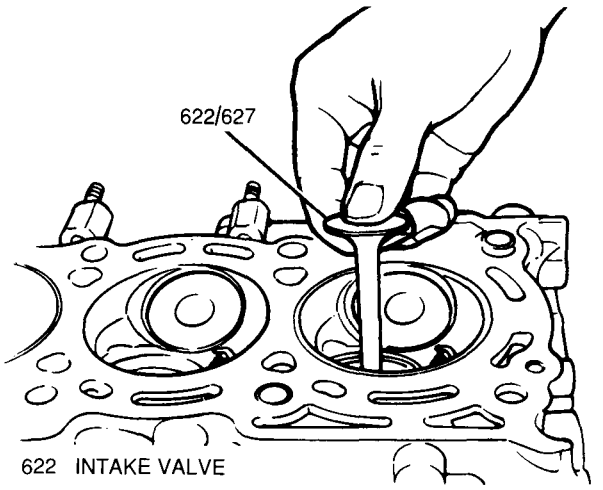

622 INTAKE VALVE
627 EXHAUST VALVE PC2142-6A1-EJ-RS

Figure 53 Installing Valve

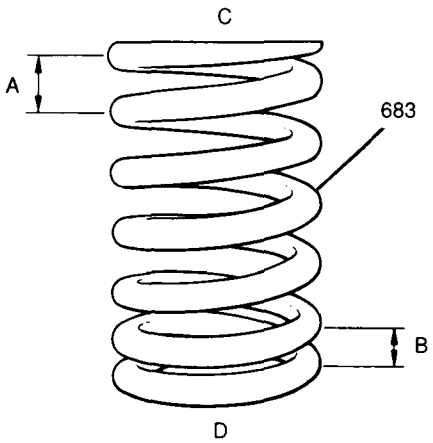

A LARGE-PITCH
B SMALL-PITCH
C VALVE SPRING RETAINER SIDE
D VALVE SPRING SEAT SIDE
683 VALVE SPRING PC2143-6A1-EJ-RS

Figure 54 Valve Spring

5. Valve spring and valve spring retainer. Each valve spring has large-pitch end (top) and small-pitch end (bottom) (Figure 54). Be sure to position valve spring in place with its small-pitch end facing the bottom (valve spring seat side).
   - Compress valve spring using a J 8062 and J 37979 and fit two valve keepers into groove provided on the valve stem.
   - Remove the J 8062 and J 37979.
6. Camshaft to cylinder head. After applying engine oil to camshaft journal and around all cams, slide camshaft into cylinder head from flywheel end of cylinder head.
7. Rocker arms, springs and rocker arm shafts to cylinder head; secure with ten screws.

Tighten

- Rocker arm shaft screws to 11 N·m (97 lb.in.).

RECOMMENDED VALVE SPECIFICATIONS

	VALVE SPECIFICATIONS			
	INTAKE VALVE	EXHAUST VALVE	MAXIMUM VARIATION	
			INTAKE VALVE	EXHAUST VALVE
VALVE STEM DIAMETER	6.965–6.980 mm (0.2742–0.2748")	6.950–6.965 mm (0.2737–0.2742")		
VALVE GUIDE I.D.	7.000–7.015 mm (0.2756–0.2761")	7.000–7.015 mm (0.2756–0.2761")		
STEM-TO-GUIDE CLEARANCE	0.020–0.050 mm (0.0008–0.0019")	0.035–0.065 mm (0.0014–0.0025")	0.07 mm (0.0027")	0.09 mm (0.0035")
VALVE STEM END DEFLECTION LIMIT	0.14 mm (0.005")	0.18 mm (0.007")		
VALVE HEAD THICKNESS	1.0 mm (0.039")	1.0 mm (0.039")	0.6 mm (0.023")	0.7 mm (0.027")

PC0903-6A1-EJ-RS

Figure 55 Valve Specifications

Valves

Figures 55, 56 and 57

Inspect

1. Each valve for wear, burn or distortion at its face and stem. Replace as necessary.
2. Valve stem end face for pitting and wear. If pitting or wear is found, valve stem end may be resurfaced. Replace valve if chamfer area is excessively worn.

Measure

Tools Required:
J 8001 Dial Indicator Set
J 26900-1 Outside Micrometer
J 26900-13 Magnetic Base

1. Thickness of valve head using a steel scale (Figure 56). The standard valve thickness is 1.0 mm (0.039-inch). If the intake valve thickness is less than 0.6 mm (0.023-inch), replace the valve. If the exhaust valve thickness is less than 0.7 mm (0.027-inch), replace the valve.

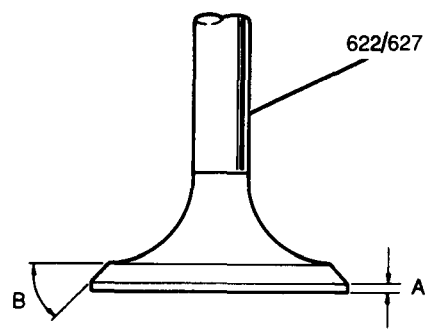

A VALVE HEAD THICKNESS
B 45°
622 INTAKE VALVE
627 EXHAUST VALVE

PC2144-6A1-EJ-RS

Figure 56 Valve Head Thickness Measurement

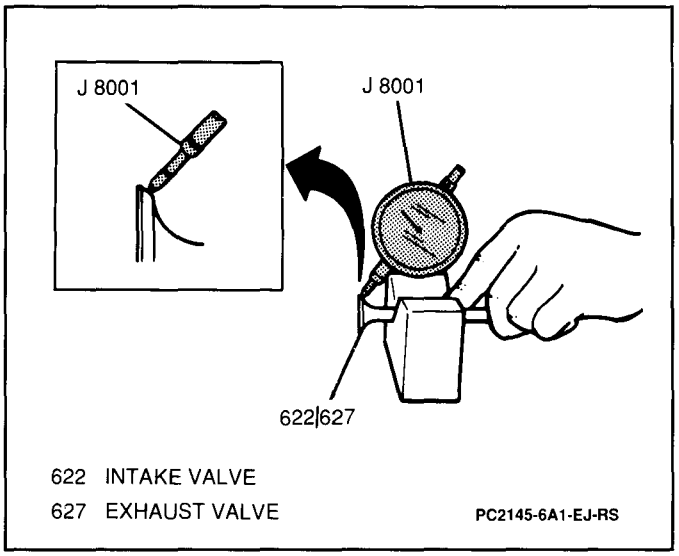

Figure 57 Measuring Valve Radial Runout

2. Each valve for radial runout using a J 8001 with a J 26900-13 and "V" block (Figure 57). To measure runout, rotate valve slowly. If measured runout exceeds limit of 0.08 mm (0.003-inch), replace valve.

Seating Contact Width

Figure 58

Produce a contact pattern on each valve by the following procedure:

- Apply a uniform coat of a smooth coloring compound to the valve seat. There are many compounds available for this purpose. The manufacturer's instructions should be carefully followed to get the proper results.
- Using a valve lapper, produce a contact pattern on each valve by rotating valve while gently tapping each valve head to the valve seat.

The pattern produced on the seating face of each valve must be a continuous ring without any break. The width of the pattern must be within 1.3 to 1.5 mm (0.0512 to 0.0590-inch) for both intake and exhaust valves (Figure 58).

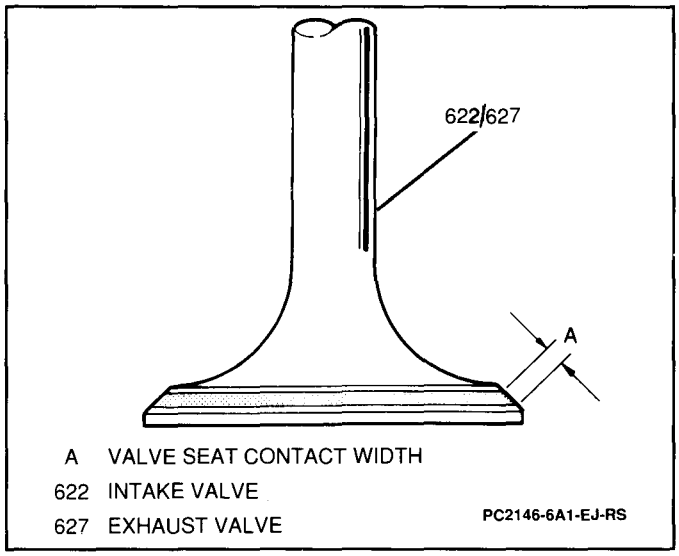

Figure 58 Valve Seating Contact Pattern Width

Valve Seat Repair

Figure 59

A valve seat not producing a uniform contact with its valve, or showing seating contact that is not within the specified width, must be repaired by regrinding finish or by lapping the valve with lapping compound.

The valve seats for both the intake and exhaust valves are machined to three different angles. For both intake and exhaust valves, the seat contact surface is cut to a 45 degree angle. The area above the contact surface (closest to the combustion chamber) is cut to a 15 degree angle and the area below the contact surface (furthest from the combustion chamber) is cut to a 60 degree angle (Figure 59).

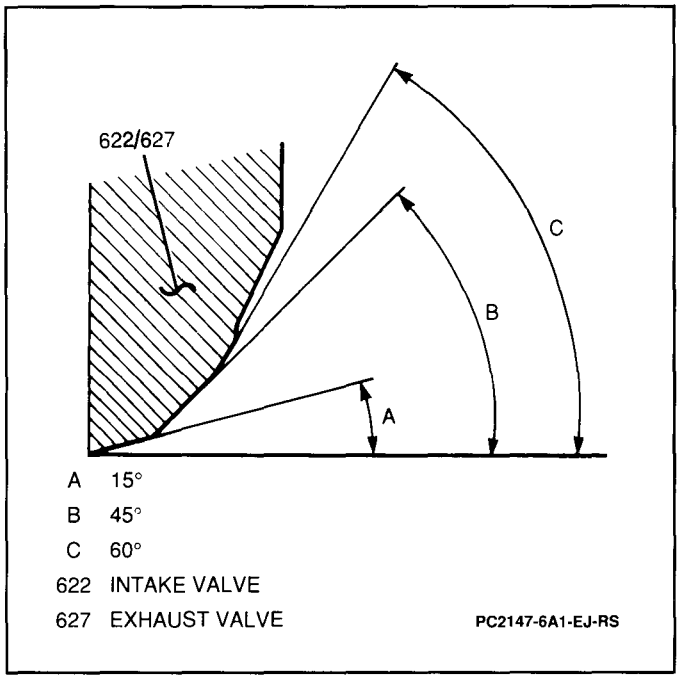

Figure 59 Valve Head Cutting Angles

1. Using a 45 degree valve seat cutter, descale and clean up the seat with one or two turns.

   NOTICE: Cut only the minimum amount from the seat as necessary. This prevents the possibility of valve stem becoming too close to the camshaft lobe.

2. Inspect seat contact width. Refer to "Seating Contact Width" earlier in this section. If seat is pitted or burned, additional seat conditioning with a 45 degree valve seat cutter is required.
3. If contact area is too wide, use a 15 or 60 degree valve seat cutter to narrow. If contact area is too narrow, use the 45 degree valve seat cutter to widen.
4. After desired seat width is achieved, lap valve on seat in two steps, first with a coarse lapping compound applied to its face and then with a fine compound, each time using a valve lapper.

Valve Springs

Figures 60, 61 and 62

Inspect

- Valve springs for evidence of breakage or weakening. Replace as necessary.

Measure

Tools Required:
J 26900-5 Vernier Caliper
J 22738-2 Valve Spring Tester

1. Each valve spring free length using a J 26900-5 (Figure 60). Standard free length is 50.46 mm (1.9866-inches). If valve spring free length is less than 48.50 mm (1.9094-inches), replace the valve spring.

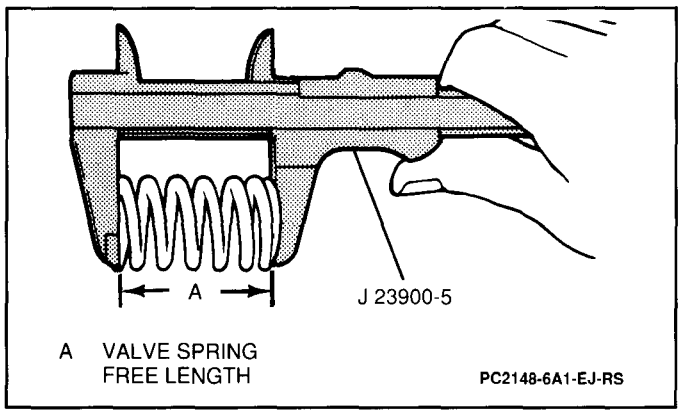

Figure 60 Measuring Valve Spring Free Length

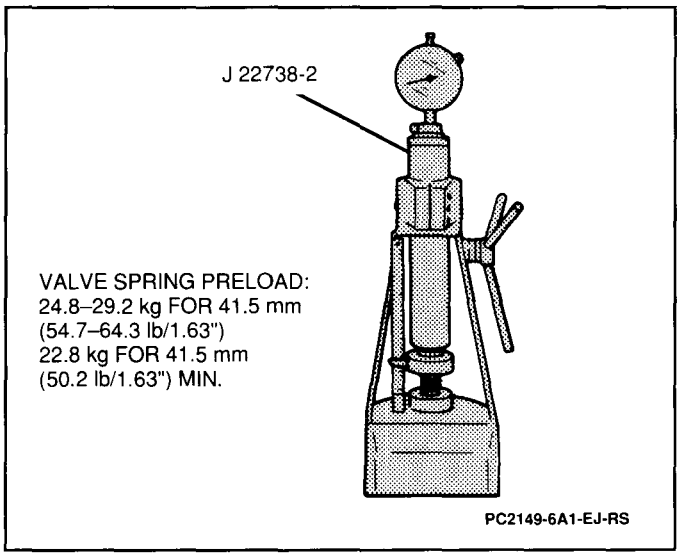

Figure 61 Measuring Valve Spring Preload

- Using a J 22738-2, measure valve spring preload (Figure 61). Standard preload is 22.8 to 29.2 kg at 41.5 mm (50.2 to 64.3 lbs. at 1.63-inches).

2. Valve spring squareness, using a square and surface plate to check each valve spring for squareness in terms of clearance between end of valve spring and square. Valve springs with a side clearance larger than 2.0 mm (0.079-inch) must be replaced (Figure 62).

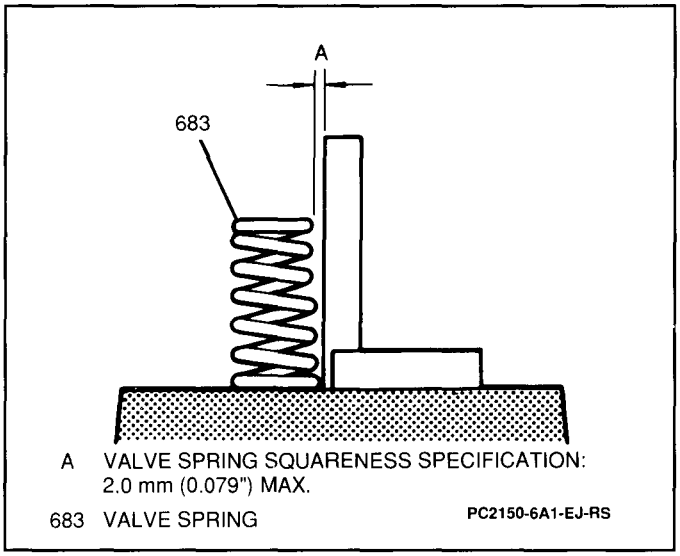

Figure 62 Measuring Valve Spring Squareness

Cylinder Head

Figures 63, 64 and 65

Inspect

NOTICE: Do not use any sharp edged tools to scrape off carbon. Be careful not to scuff or nick the sealing surfaces when cleaning. This could lead to leakage and reduced power output.

- Clean cylinder head with solvent and air dry thoroughly. Remove all carbon from combustion chambers.

1. Cylinder head for cracks in intake and exhaust ports, combustion chambers and head surface.
2. Flatness of cylinder head gasket surface. Using a straightedge and feeler gage, check surface at a total of six locations (Figure 63). If distortion exceeds the 0.05 mm (0.002-inch) limit at any location, resurfacing of the head is necessary. If distortion cannot be brought within limits, replace cylinder head. Leakage of combustion gases from this gasket joint is often due to a warped gasket surface; such leakage results in reduced power output.

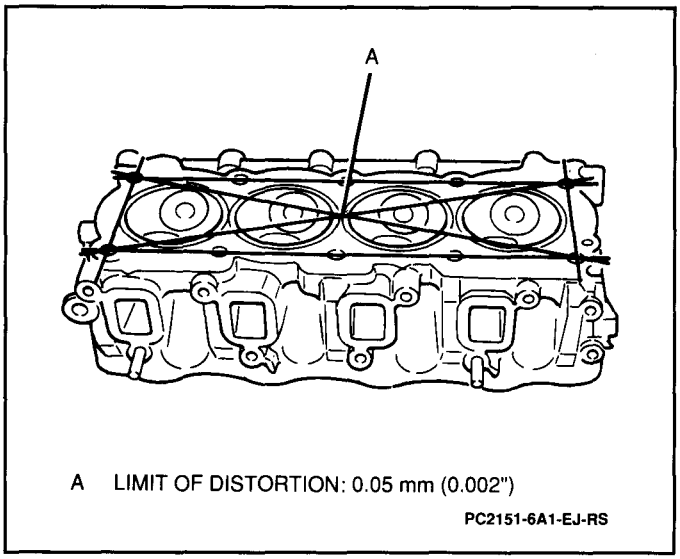

Figure 63 Cylinder Head Distortion Measurement Locations

3. Distortion of manifold seating faces. Using a straightedge and a feeler gage, check seating faces of intake and exhaust manifolds on cylinder head (Figures 64 and 65). Distortion limit is 0.10 mm (0.004-inch). If distortion cannot be brought within limit by resurfacing, replace cylinder head.

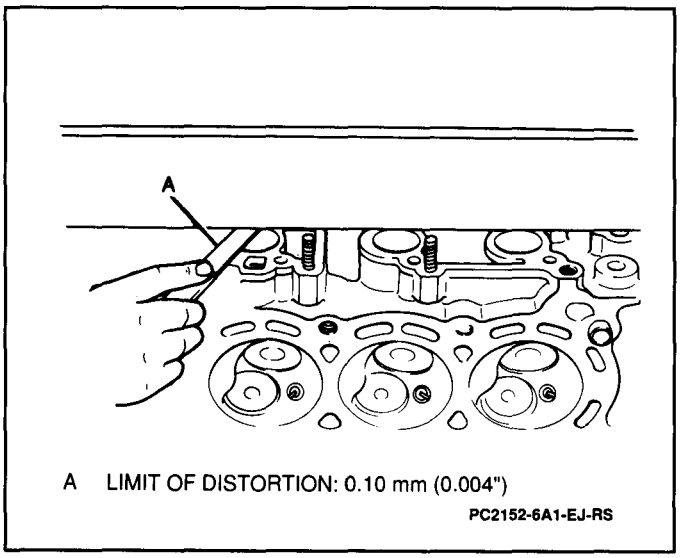

Figure 64 Measuring Intake Manifold Seating Surface Distortion

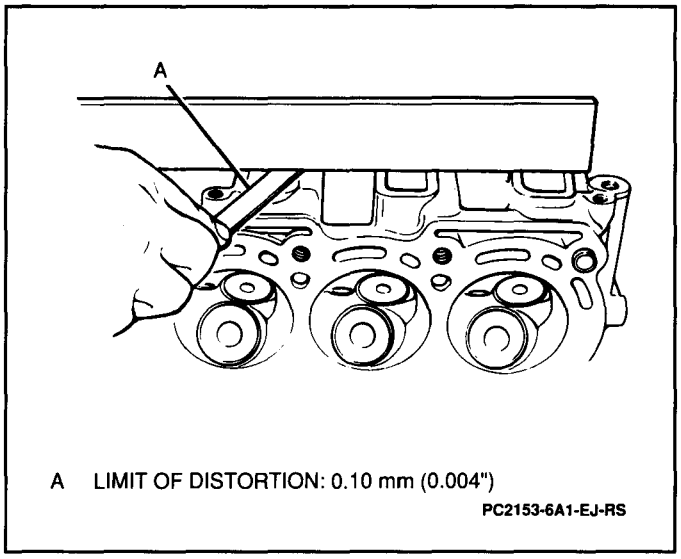

Figure 65 Measuring Exhaust Manifold Seating Surface Distortion

Valve Guide Clearance

Figure 66

Measure

Tools Required:
J 26900-1 Outside Micrometer
J 26900-14 Small Hose Gages

1. Valve stem outside diameter using a J 26900-1 and record the measurement (Figure 66). The standard outside diameters for valve stems are 6.965 to 6.980 mm (0.2742 to 0.2748-inch) for intake valves and 6.950 to 6.965 mm (0.2737 to 0.2742-inch) for exhaust valves. Measure the diameter at more than one place along the length of the valve stem. Record measurement.

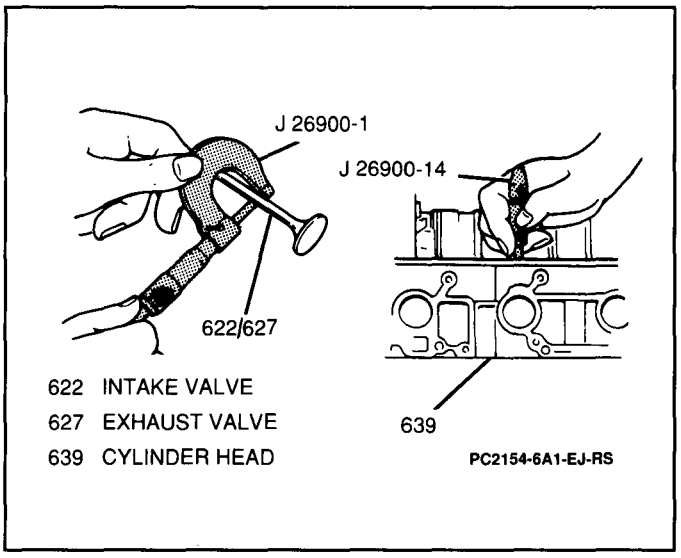

Figure 66 Measuring Valve and Valve Guide

2. Valve guide inside diameter using a J 26900-14 (Figure 66). Record the measurement. The standard inside diameter of valve guides is 7.000 to 7.015 mm (0.2756 to 0.2761-inch) for both intake and exhaust valve guides. Measure the diameter at more than one place along the length of the valve guide. Record measurement.
3. Valve stem-to-valve guide clearance by subtracting the valve stem outside diameter measurement from the valve guide inside diameter measurement. Standard clearances are 0.020 to 0.050 mm (0.0008 to 0.0019-inch) for the intake valves and 0.035 to 0.065 mm (0.0014 to 0.0025-inch) for the exhaust valves. If the intake valve guide clearance exceeds 0.070 mm (0.0027-inch), replace the intake valve and valve guide. If the exhaust valve guide clearance exceeds 0.090 mm (0.0035-inch), replace the exhaust valve and valve guide.

Valve Guide Installation

Figures 67, 68 and 69

Install or Connect

Tools Required:
J 34831 Reamer
J 34832 Reamer
J 34834 Valve Guide Installer

- Before installing valve guide to cylinder head, ream guide hole with a J 34832 to remove burrs (Figure 67).

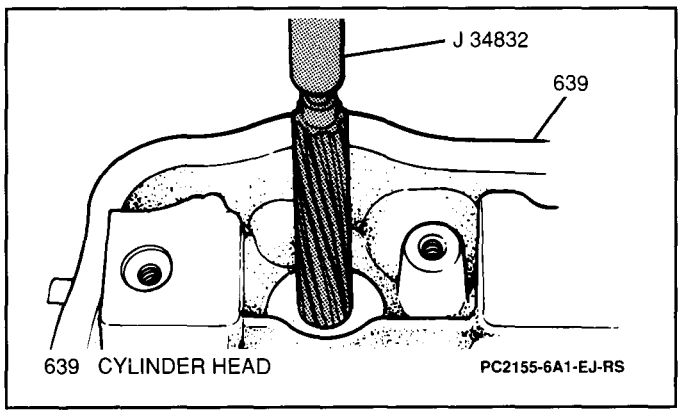

Figure 67 Reaming Valve Guide Bore

Important

- Do not reuse old valve guide once disassembled. Install a new valve guide.
- Intake and exhaust valve guides are identical.

- Valve guide to cylinder head using a J 34834. Drive in new valve guide until J 34834 contacts cylinder head. After installing, make sure the valve guide protrudes from cylinder head by 14 mm (0.55-inch) (Figure 68).

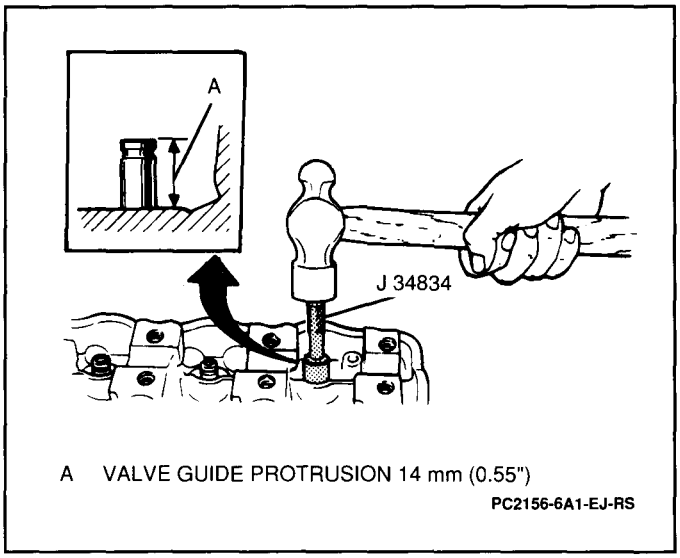

Figure 68 Valve Guide Installation

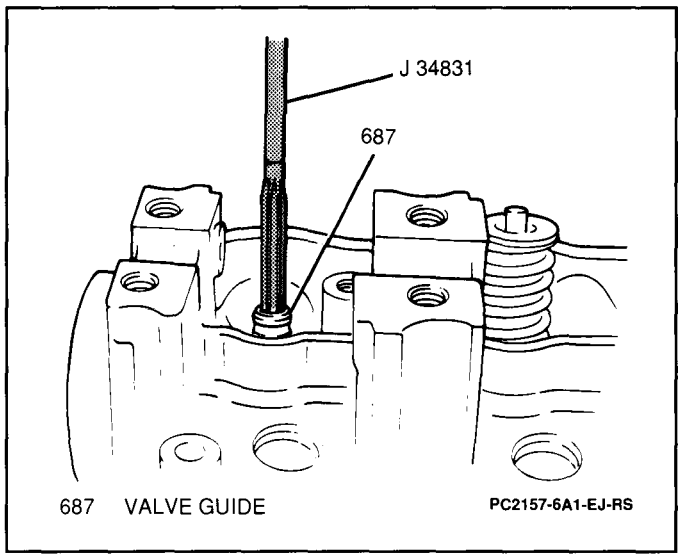

Figure 69 Reaming Valve Guide

- Ream valve guide with a J 34831 (Figure 69). After reaming, clean bore.

Camshaft

Figures 70, 71 and 72

Measure

Tools Required:
J 8001 Dial Indicator Set
J 26900-13 Magnetic Base
J 26900-2 Outside Micrometer

1. Place camshaft in a pair of V-blocks and measure camshaft runout at center using a J 8001 and J 26900-13 (Figure 70). If runout exceeds maximum specification of 0.10 mm (0.0039-inch), replace camshaft.

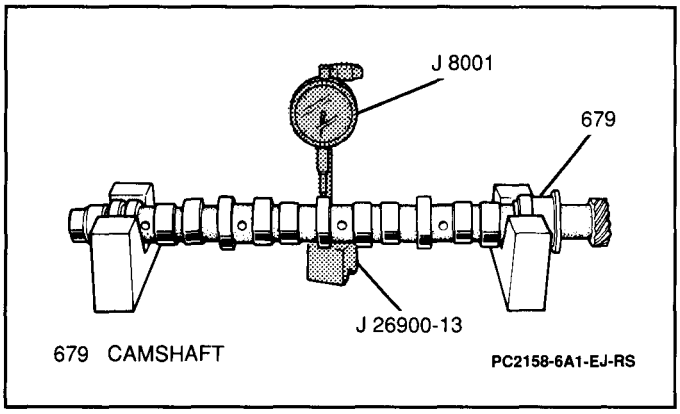

Figure 70 Measuring Camshaft Runout

2. Camshaft lobe height, using a J 26900-2 (Figure 71). Intake camshaft lobe height specification is 37.536 to 37.400 mm (1.4763 to 1.4724-inches) and exhaust camshaft lobe height specification is 37.501 to 37.400 (1.4749 to 1.4724-inches). If any camshaft lobe height is outside specification, camshaft must be replaced.
3. Camshaft journal diameter at four places on each journal using the J 26900-2 (Figure 72) to obtain four readings on each journal. Record all measurements.

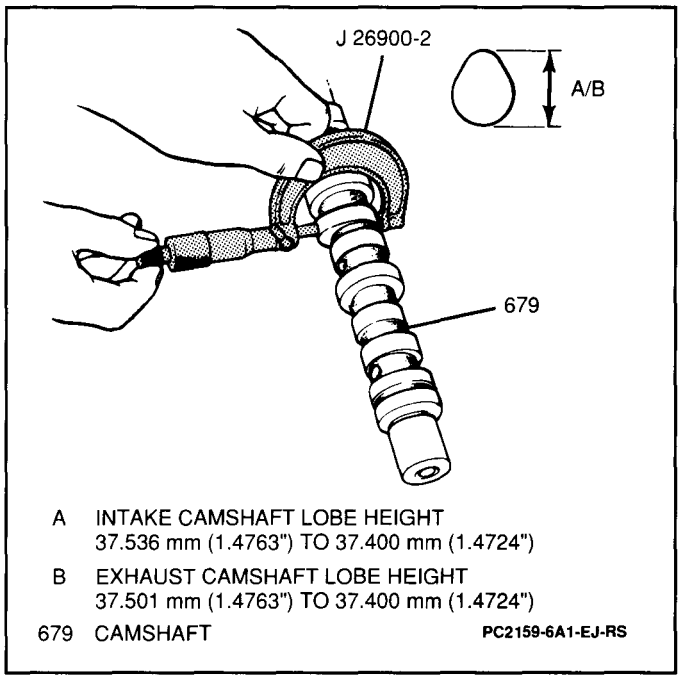

Figure 71 Measuring Camshaft Lobe Height

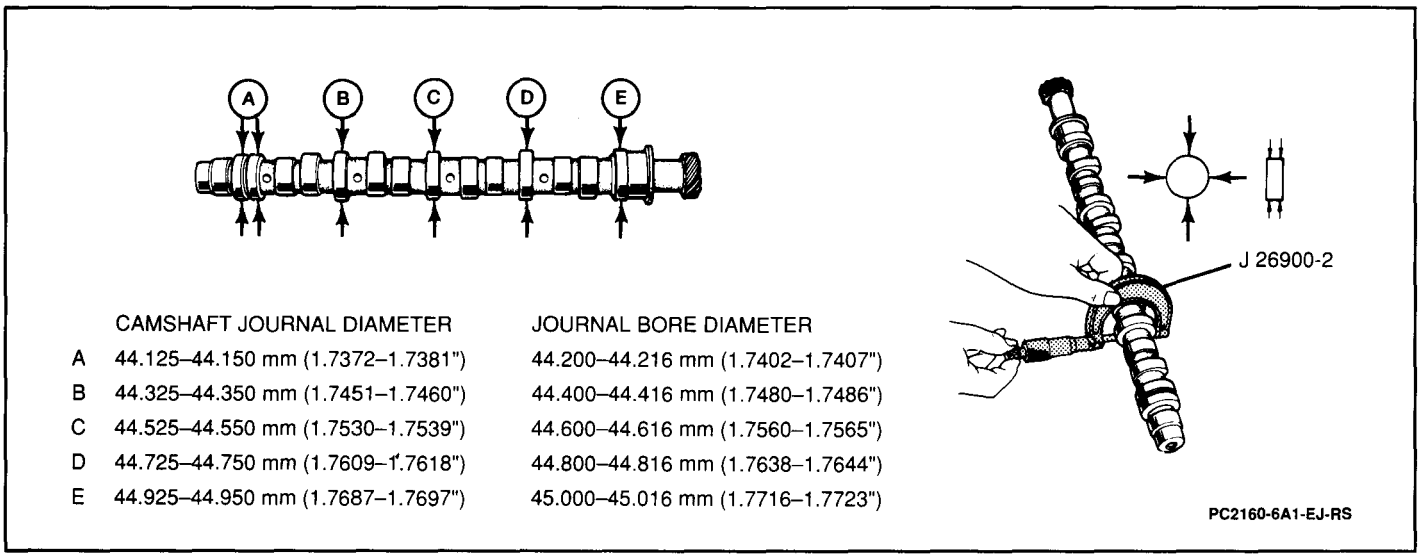

	CAMSHAFT JOURNAL DIAMETER	JOURNAL BORE DIAMETER
A	44.125–44.150 mm (1.7372–1.7381")	44.200–44.216 mm (1.7402–1.7407")
B	44.325–44.350 mm (1.7451–1.7460")	44.400–44.416 mm (1.7480–1.7486")
C	44.525–44.550 mm (1.7530–1.7539")	44.600–44.616 mm (1.7560–1.7565")
D	44.725–44.750 mm (1.7609–1.7618")	44.800–44.816 mm (1.7638–1.7644")
E	44.925–44.950 mm (1.7687–1.7697")	45.000–45.016 mm (1.7716–1.7723")

Figure 72 Measuring Camshaft Journal Diameter

4. Journal bore diameter of the cylinder head using a telescoping micrometer. Record all measurements.
   - Subtract journal diameter measurement from the journal bore measurement to determine camshaft journal-to-journal bore clearance. Camshaft journal-to-journal bore clearance specification is 0.050 to 0.091 mm (0.0020 to 0.0036-inch).

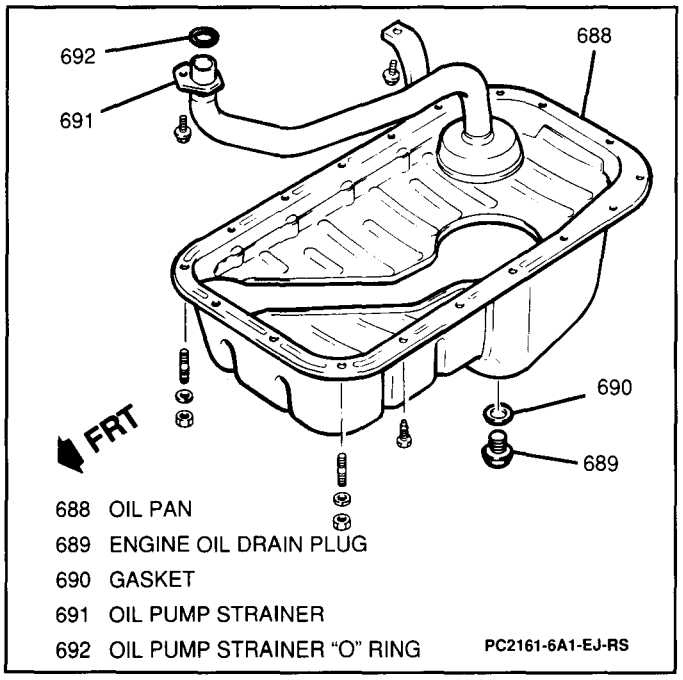

Figure 73 Engine Oil Pan and Oil Pump Strainer

ENGINE OIL PAN AND OIL PUMP STRAINER

Figures 73 through 77

Remove or Disconnect

- Raise and suitably support vehicle. Refer to SECTION 0A.
1. Four bolts and front skid plate from vehicle (if equipped).
2. Front differential assembly from chassis (four-wheel drive model vehicles). Refer to SECTION 4C.
- Place a drain pan beneath engine oil pan to catch escaping oil.
3. Engine oil drain plug and gasket, allowing engine oil to drain (Figure 74).

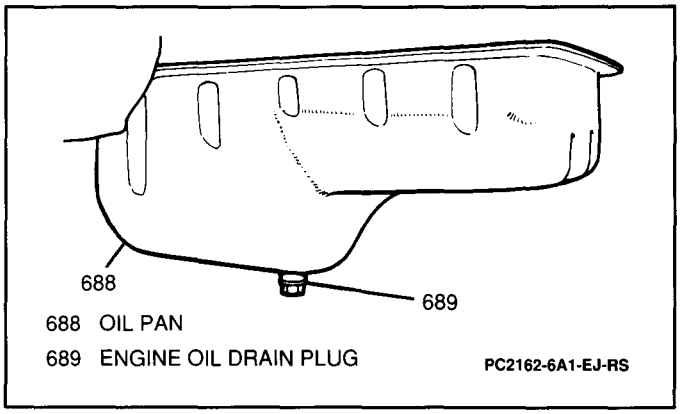

Figure 74 Engine Oil Pan Drain Plug

4. Clutch housing lower plate (manual transmission equipped vehicles, refer to SECTION 7B) or torque converter housing lower plate (automatic transmission equipped vehicles, refer to SECTION 7A).
5. Sixteen bolts, two nuts and engine oil pan from cylinder block (Figure 75).

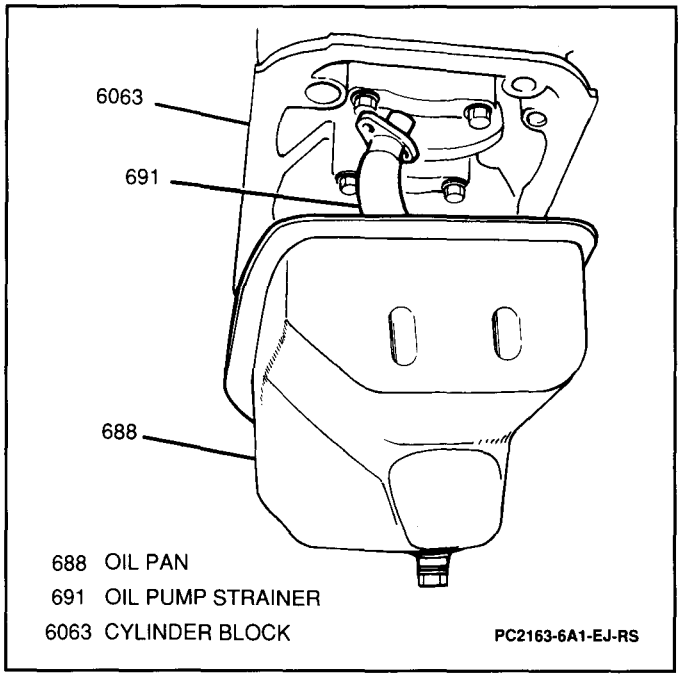

Figure 75 Engine Oil Pan and Oil Pump Strainer Removal

6. Two bolts and oil pump strainer from cylinder block.

Clean

1. Inside of engine oil pan and oil pump strainer screen.
2. Mating surfaces of engine oil pan and cylinder block.

Install or Connect

- Apply gasket paste GM P/N 1050026, or equivalent, to the engine oil pan mating surface in a continuous bead (Figure 76).

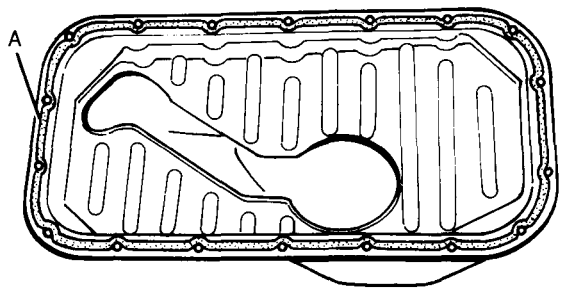

A GASKET PASTE GM P/N 1050026, OR EQUIVALENT

PC2164-6A1-EJ-RS

Figure 76 Engine Oil Pan Gasket Paste Application

1. Oil pump strainer to engine oil pan.
2. Oil pump strainer to cylinder block; secure with two bolts (Figure 77).

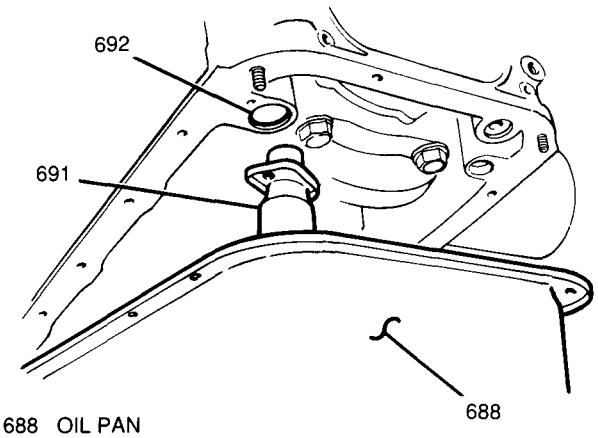

688 OIL PAN
691 OIL PUMP STRAINER
692 OIL PUMP STRAINER "O" RING

PC2165-6A1-EJ-RS

Figure 77 Installing Oil Pump Strainer and Engine Oil Pan

Tighten

- Oil pump strainer bolts to 11 N·m (97 lb.in.).

3. Engine oil pan to cylinder block; secure with sixteen bolts and two nuts.

Tighten

- Engine oil pan nuts and bolts to 11 N·m (97 lb.in.).

4. Clutch housing lower plate (manual transmission equipped vehicles, refer to SECTION 7B) or torque converter housing lower plate (automatic transmission equipped vehicles, refer to SECTION 7A).
5. Front skid plate (if equipped); secure with four bolts.

Tighten

- Front skid plate bolts to 55 N·m (40 lb.ft.).

6. Engine oil drain plug and gasket.

Tighten

- Engine oil drain plug to 35 N·m (26 lb.ft.).

7. Front differential assembly to chassis (four-wheel drive model vehicles). Refer to SECTION 4C.

- Lower vehicle.
- Refill engine oil to specifications. Refer to SECTION 0B.

Inspect

- Upon completion of installation, check oil pressure. Refer to SECTION 6.

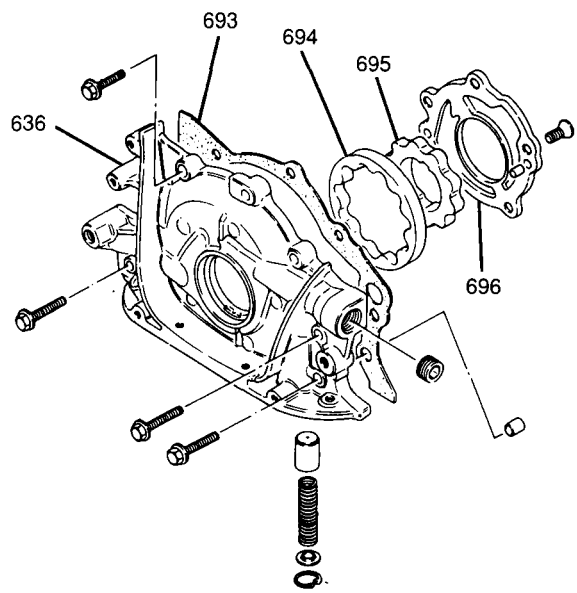

636 OIL PUMP BODY
693 OIL PUMP GASKET
694 OIL PUMP OUTER GEAR
695 OIL PUMP INNER GEAR
696 GEAR PLATE

PC2166-6A1-EJ-RS

Figure 78 Oil Pump

OIL PUMP

Figures 74 through 85

Remove or Disconnect

Tool Required:
J 35271 Flywheel Holder

- Discharge and recover refrigerant. Refer to SECTION 1B.
- Raise and suitably support vehicle. Refer to SECTION 0A.

1. Four bolts and front skid plate from vehicle (if equipped).
2. Front differential assembly from chassis (four-wheel drive model vehicles). Refer to SECTION 4C.

- Place a drain pan beneath engine oil pan to catch escaping oil.

3. Engine oil drain plug and gasket, allowing engine oil to drain (Figure 74).
4. Clutch housing lower plate (manual transmission equipped vehicles, refer to SECTION 7B) or torque converter housing lower plate (automatic transmission equipped vehicles, refer to SECTION 7A).
5. Sixteen bolts and two nuts and engine oil pan from cylinder block (Figure 75).
6. Two bolts and oil pump strainer from cylinder block.

- Lower vehicle.

7. A/C drive belt, compressor and bracket (if equipped). Refer to SECTION 1B.
8. Timing belt outside cover, timing belt and tensioner. Refer to "Timing Belt and Tensioner" earlier in this section.
9. Oil level indicator from guide tube.
10. One bolt and guide tube with O-ring from oil pump.

- Lock crankshaft using a J 35271 on the flywheel (Figure 79).

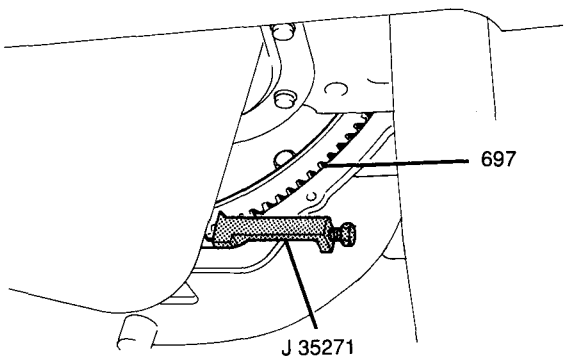

697 FLYWHEEL PC2167-6A1-EJ-RS

Figure 79 Locking Flywheel

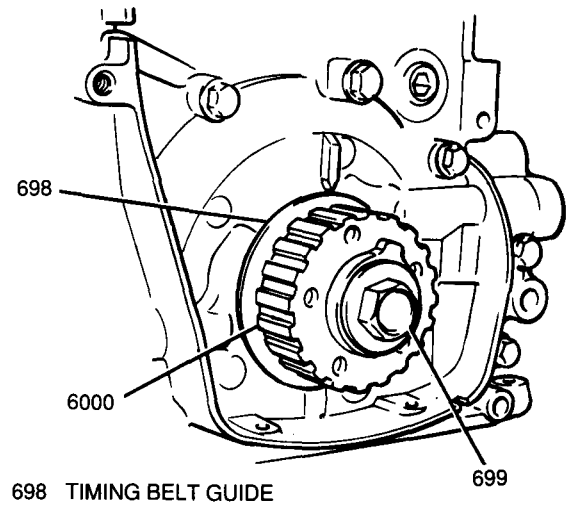

698 TIMING BELT GUIDE
699 CRANKSHAFT TIMING BELT GEAR BOLT
6000 CRANKSHAFT TIMING BELT GEAR
PC2168-6A1-EJ-RS

Figure 80 Crankshaft Timing Belt Gear Bolt

11. Crankshaft timing belt gear bolt (Figure 80).
12. Crankshaft timing belt gear.
13. Seven bolts and oil pump assembly, gasket, rubber oil pump-to-coolant pump seals and two guide pins from cylinder block (Figure 81).

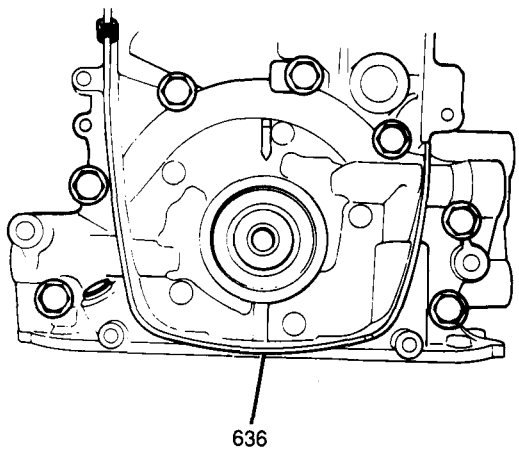

636 OIL PUMP BODY PC2169-6A1-EJ-RS

Figure 81 Oil Pump Bolts

Clean

- Cylinder block, oil pump and oil pan mating surfaces.

Install or Connect

Tool Required:
J 34853 Crankshaft Oil Seal Guide

- Apply a thin coat of oil to J 34853.

1. Oil seal to crankshaft using a J 34853 (Figure 82).

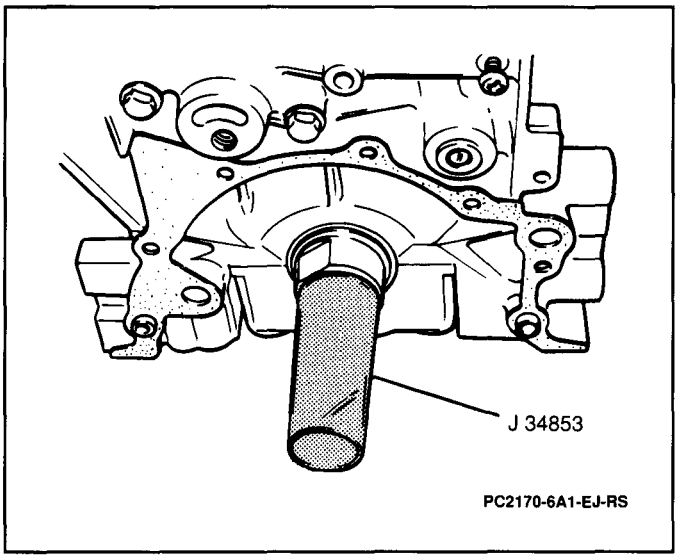

Figure 82 Oil Seal Installation With J 34853

2. Two guide pins and oil pump assembly with new gasket and rubber oil pump-to-coolant pump seals to crankshaft using J 34853 (Figures 83 and 84); secure with seven bolts.

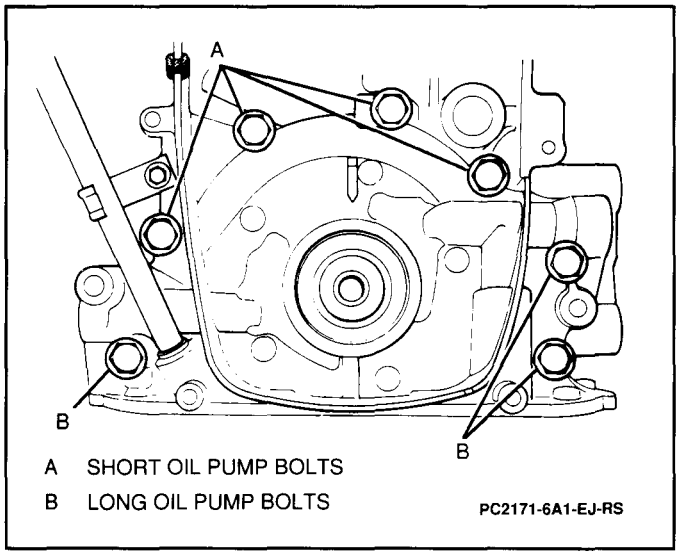

Figure 83 Oil Pump Bolt Locations

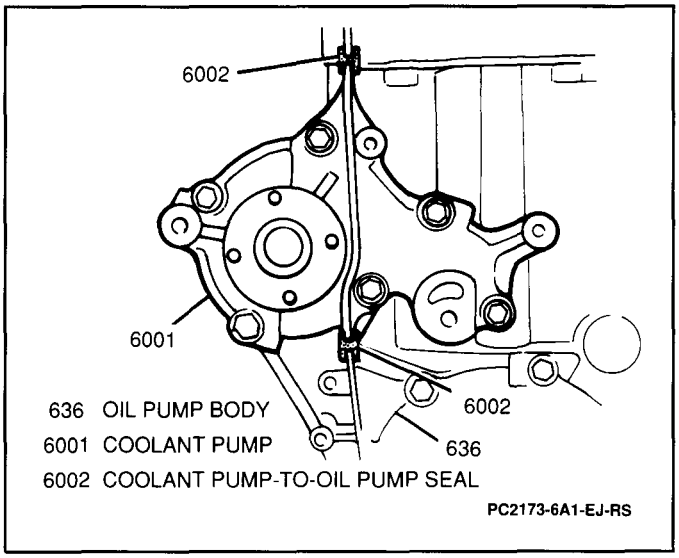

Figure 84 Rubber Oil Pump-to-Coolant Pump Seals

Tighten

- Oil pump bolts to 11 N·m (97 lb.in.).

Inspect

- Ensure the oil seal lip is not upturned, then remove the J 34853.
- Edge of oil pump gasket. If it protrudes out into the engine oil pan mating surface, trim with a sharp knife, making edge smooth and flush with mating surface of the engine oil pan (Figure 85).

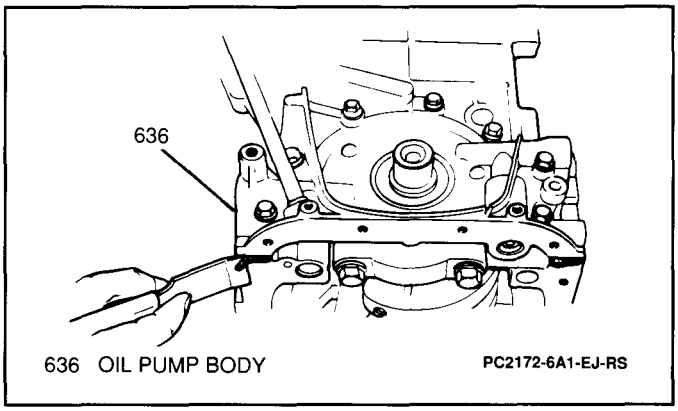

Figure 85 Trimming Protrusion From Oil Pump Gasket

- Raise and suitably support vehicle. Refer to SECTION 0A.
- Apply gasket paste GM P/N 1050026, or equivalent, to the engine oil pan mating surface in a continuous bead (Figure 76).

3. Oil pump strainer to engine oil pan.
4. Oil pump strainer to cylinder block; secure with one oil pump strainer bolt and one oil pump strainer bracket bolt (Figure 77).

Tighten

- Oil pump strainer bolt and oil pump strainer bracket bolt to 11 N·m (97 lb.in.).

5. Engine oil pan to cylinder block; secure with sixteen bolts and two nuts.

Tighten

- Engine oil pan nuts and bolts to 11 N·m (97 lb.in.).

6. Engine oil drain plug and gasket to engine oil pan.

Tighten

- Engine oil drain plug to 35 N·m (26 lb.ft.).

7. Clutch housing lower plate (manual transmission equipped vehicles, refer to SECTION 7B) or torque converter housing lower plate (automatic transmission equipped vehicles, refer to SECTION 7A).
8. Front differential assembly to chassis (four-wheel drive model vehicles). Refer to SECTION 4C.
9. Front skid plate (if equipped); secure with four bolts.

Tighten

- Front skid plate bolts to 55 N·m (40 lb.ft.).

- Lower vehicle.

10. Crankshaft timing belt gear; secure with one bolt.

Tighten

- Crankshaft timing belt gear bolt to 110 N·m (81 lb.ft.).

11. Guide tube with new O-ring and oil level indicator to cylinder block; secure with one bolt.

Tighten

- Guide tube bolt to 14 N·m (124 lb.in.).

12. Timing belt outside cover, timing belt and tensioner. Refer to "Timing Belt and Tensioner" earlier in this section.
13. A/C drive belt, compressor and bracket (if equipped). Refer to SECTION 1D.

- Refill engine oil to specifications. Refer to SECTION 0B.
- Evacuate and charge A/C system (if equipped). Refer to SECTION 1B.
- After completing installation, start engine and check for normal oil pressure. Refer to SECTION 6.

Oil Pump Overhaul

Figures 86 through 89

Disassemble

1. Five screws and gear plate from oil pump body (Figure 86).

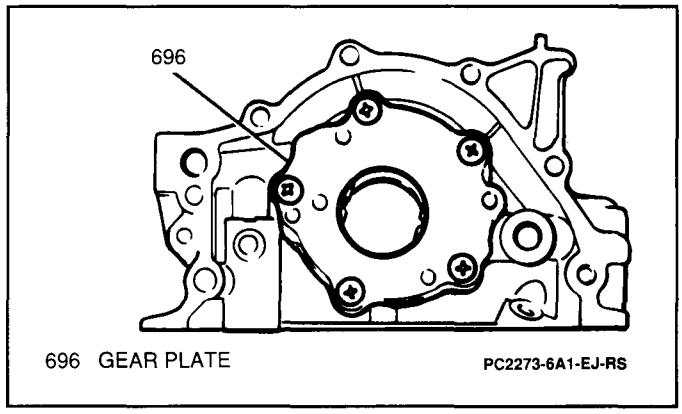

Figure 86 Gear Plate

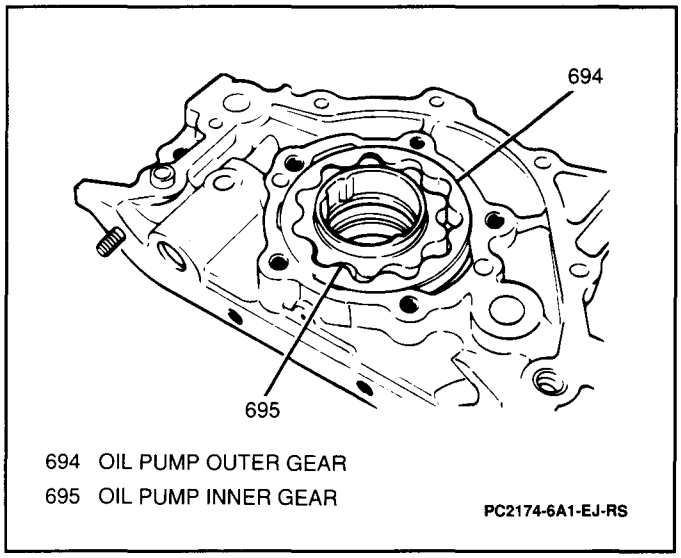

Figure 87 Oil Pump Outer and Inner Gears

2. Outer and inner oil pump gears from oil pump body (Figure 87).

Inspect

- Oil pump outer and inner gears, gear plate and oil pump body for excessive wear or damage.

Measure

1. Radial clearance between oil pump outer gear and oil pump body using a feeler gage (Figure 88). If clearance exceeds 0.310 mm (0.0122-inch), replace oil pump outer gear and/or oil pump body as necessary.

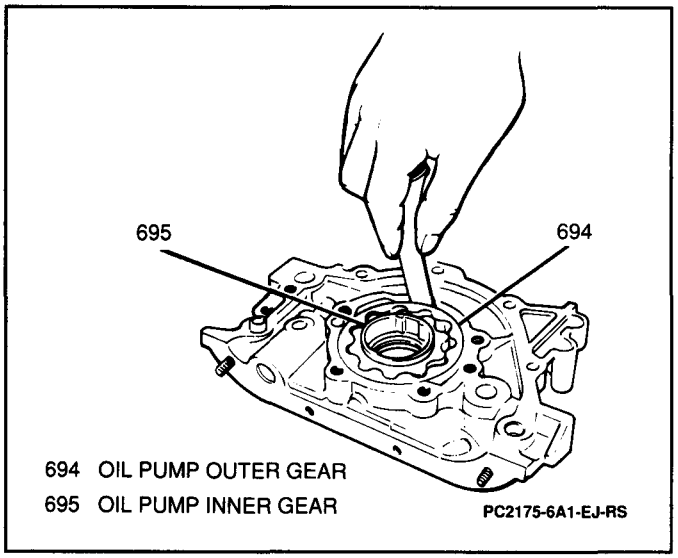

Figure 88 Radial Clearance Measurement

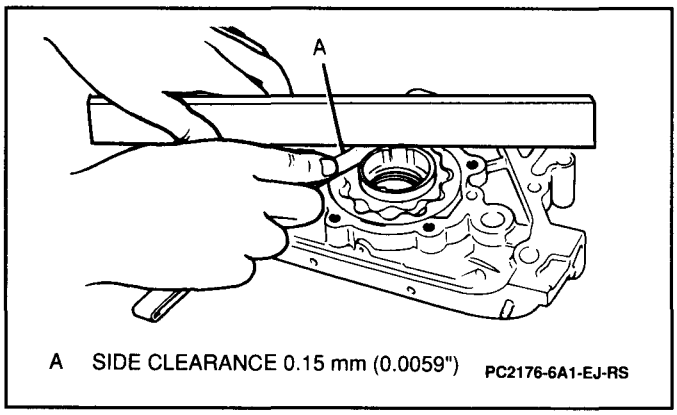

Figure 89 Side Clearance Measurement

2. Side clearance between the oil pump gears and a straightedge using a feeler gage (Figure 89). If clearance exceeds 0.15 mm (0.0059-inch), replace the gears as necessary.

Assemble

- Apply a thin coat of new engine oil to oil pump inner and outer gears, oil seal lip, and inside surface of oil pump body and gear plate.

1. Oil pump outer and inner gears to oil pump body.
2. Gear plate to oil pump body; secure with five screws.

Important

- Be sure that the oil pump gears operate smoothly after installation of the gear plate.

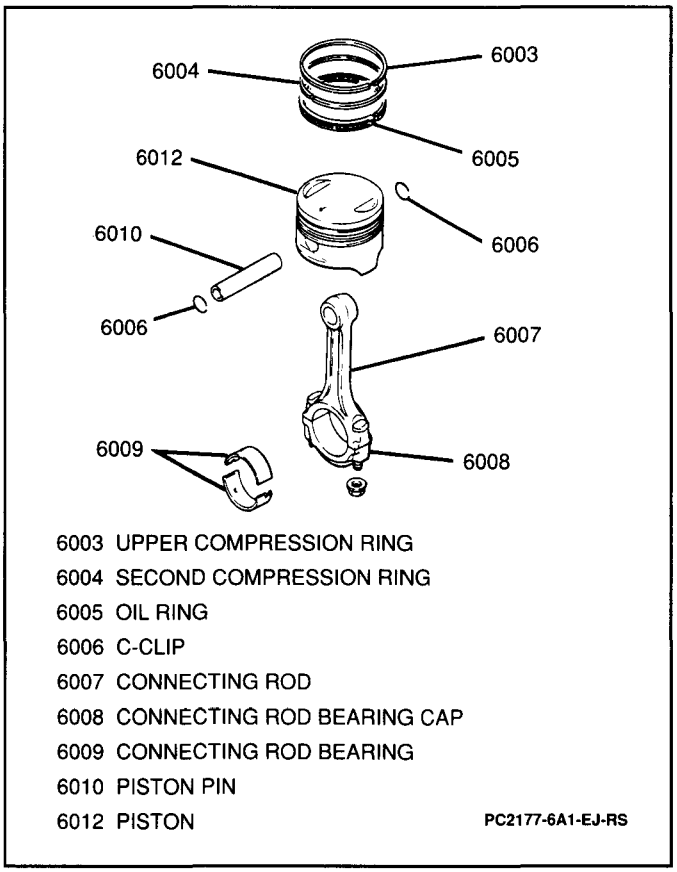

Figure 90 Piston Assembly

PISTONS, PISTON RINGS, CYLINDERS AND CONNECTING RODS

Figures 90 through 93

Remove or Disconnect

1. Cylinder head from the cylinder block. Refer to "Camshaft, Valves and Cylinder Head" earlier in this section.
2. Engine oil pan and oil pump strainer. Refer to "Engine Oil Pan and Oil Pump Strainer" earlier in this section.

- Mark cylinder number on each piston, connecting rod and connecting rod bearing cap.

3. Eight nuts and connecting rod bearing caps.

- Slide hose piece over connecting rod studs to prevent damage to the cylinder when piston and connecting rod are removed (Figure 91).

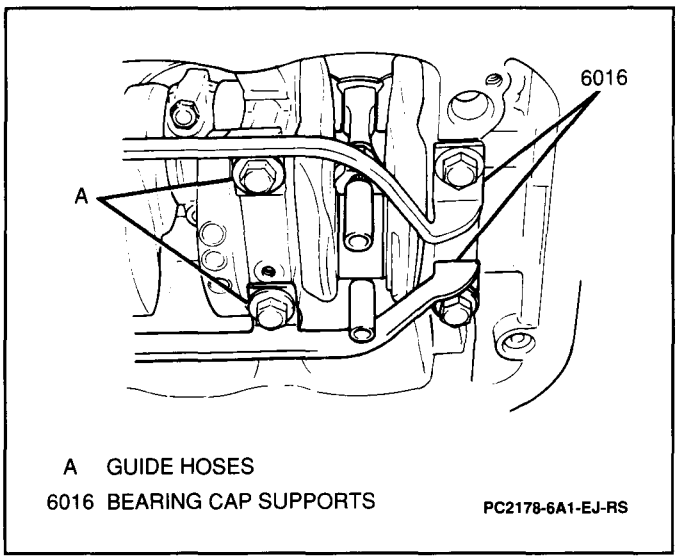

Figure 91 Guide Hose Installation

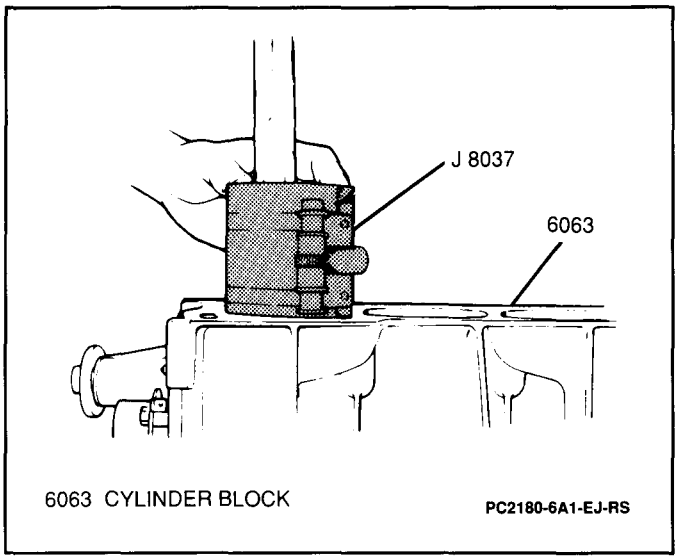

Figure 92 Installing Piston

Clean

- Carbon from top of cylinder bore.

4. Piston and connecting rod from cylinder bore by pushing out through the top of the cylinder bore.

Install or Connect

Tool Required:
J 8037 Piston Ring Compressor

- Apply light coat of clean engine oil to pistons, rings, cylinder walls, connecting rod bearings and crank pins.
- Guide hoses over the connecting rod bolts to prevent damage to bearing journal and connecting rod bolt threads when installing connecting rods (Figure 91).

1. Piston and connecting rod into cylinder bore using a J 8037, ensuring arrow mark on top of the piston points to crankshaft pulley end (Figures 92 and 93). Use a hammer handle to tap piston head and install piston into cylinder bore, keeping J 8037 pressed securely against the top of the cylinder block until all piston rings have entered cylinder bore.

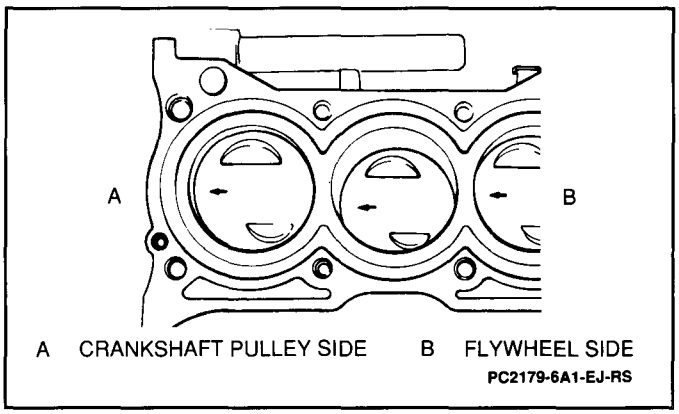

Figure 93 Piston Arrow Mark-to-Cylinder Block Orientation

- Remove hose pieces from connecting rod bolts.

2. Connecting rod bearing cap to connecting rod; secure with two nuts.

Important

- Be sure to point arrow mark on cap toward the crankshaft pulley side.

Tighten

- Connecting rod bearing cap nuts to 35 N·m (26 lb.ft.).

3. Engine oil pan and oil pump strainer. Refer to "Engine Oil Pan and Oil Pump Strainer" earlier in this section.
4. Cylinder head to the cylinder block. Refer to "Camshaft, Valves and Cylinder Head" earlier in this section.

Pistons

Figures 94 through 105

Disassemble

- Using a piston ring expander, remove two compression rings and oil ring from piston.
- Two C-clips from piston pin ends (Figure 94).

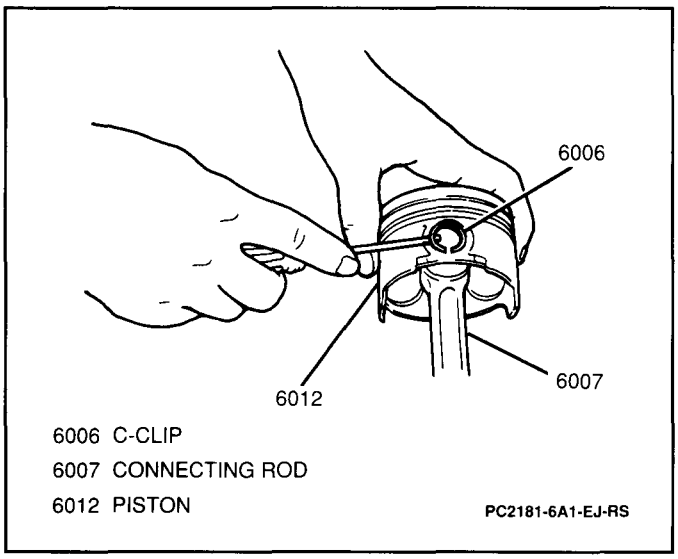

Figure 94 Removing Piston Pin C-Clip

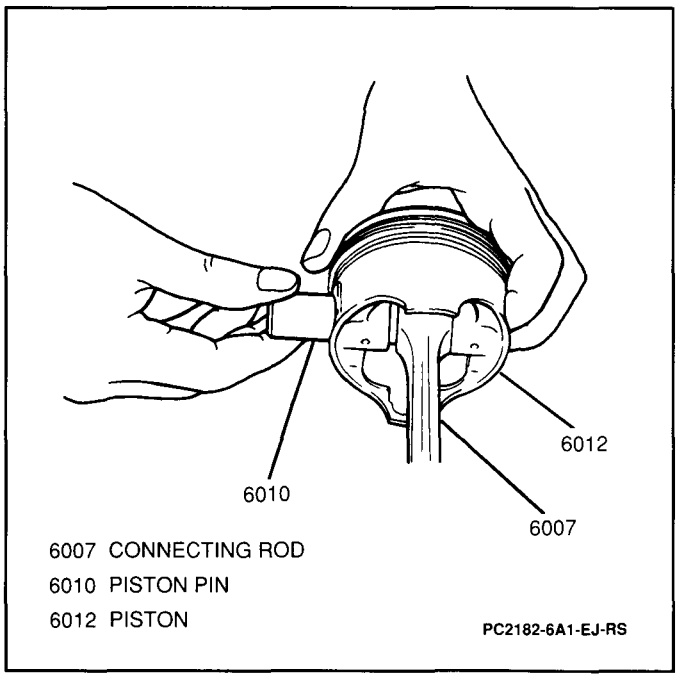

Figure 95 Removing Piston Pin

- Push piston pin out (Figure 95).

Clean

Tool Required:
J 3936-03 Piston Ring Groove Cleaner

- Carbon from ring grooves using a J 3936-03 and from remainder of piston head using suitable tools.

Measure

Tools Required:
J 26900-3 Outside Micrometer
J 8087 Cylinder Bore Gage

1. Piston diameter using a J 26900-3 at the piston grading position located 18 mm (0.71-inch) from the piston skirt end and in the direction perpendicular to the piston pin (Figure 96). Record measurement.

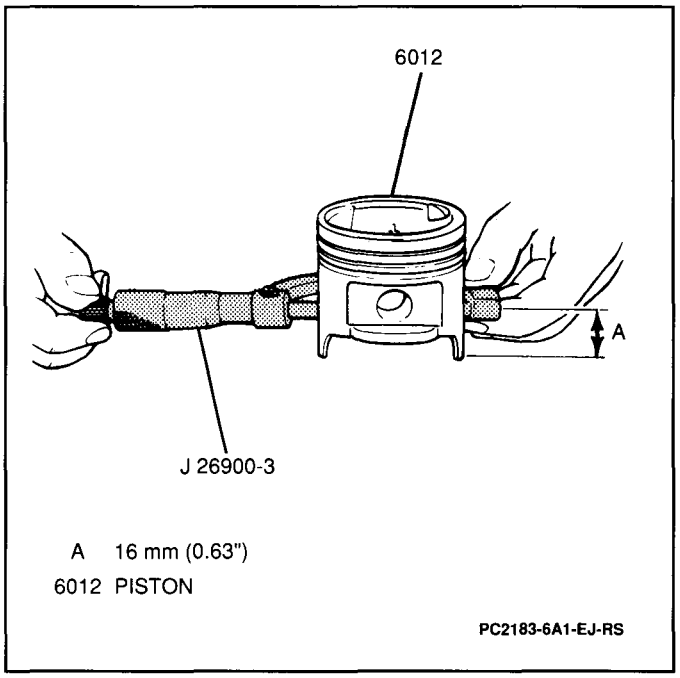

Figure 96 Measuring Piston Diameter

2. Cylinder bore inside diameter using a J 8087 (Figure 97). Cylinder bore diameter limit is 81.73 mm (3.1982-inches).

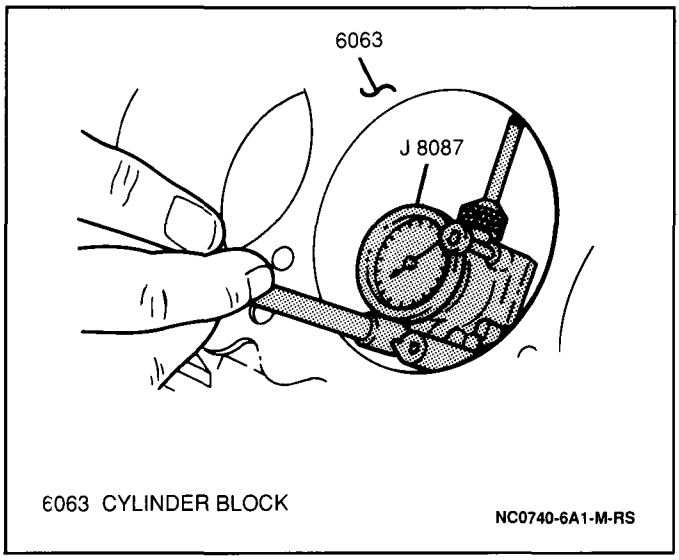

Figure 97 Measuring Cylinder Bore

3. Piston oil clearance by subtracting the piston outside diameter from the cylinder bore inside diameter. If the piston oil clearance is not 0.02 to 0.04 mm (0.0008 to 0.0015-inch) in any cylinder, replace all four pistons. If necessary, rebore all four cylinders or replace the cylinder block.
   - There are three sizes of piston available: one standard and two oversize:
     - Standard piston diameter specification: 74.970 to 74.990 mm (2.9516 to 2.9524-inches).
     - 0.25 mm (0.0098-inch) oversized piston diameter specification: 75.220 to 75.230 mm (2.9614 to 2.9618-inches).
     - 0.50 mm (0.0196-inch) oversized piston diameter specification: 75.470 to 75.480 mm (2.9713 to 2.9716-inches).
4. Piston ring groove clearance by fitting a new piston ring into the piston groove and measuring the clearance between the ring and ring land using an appropriate feeler gage (Figure 98). Before measurement can be made, the piston grooves must be clean, dry and free of carbon.

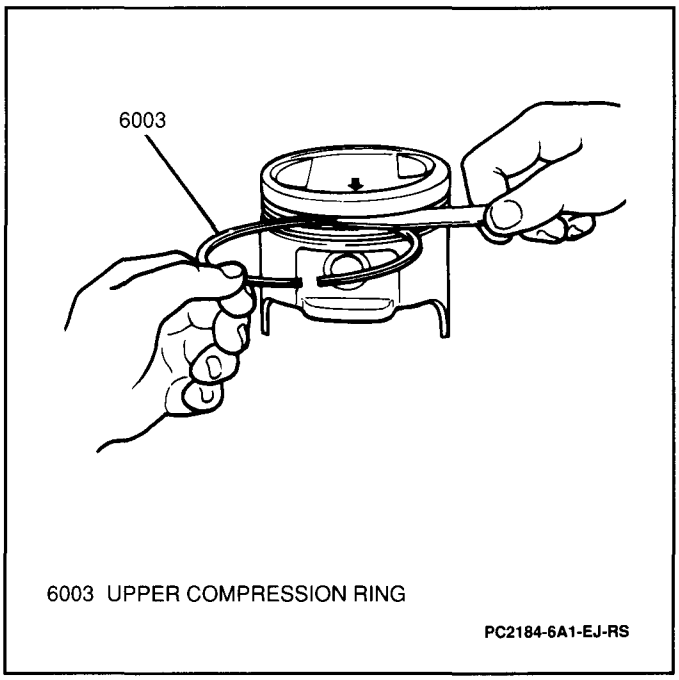

Figure 98 Piston Ring Groove Measurement

- Piston upper compression ring groove clearance specification: 0.03 to 0.07 mm (0.0012 to 0.0027-inch).
- Piston lower compression ring groove clearance specification: 0.02 to 0.06 mm (0.0008 to 0.0023-inch).

If ring groove clearance is not within specification, the piston must be replaced.

Assemble

Important

- Two sizes of pistons are available as standard size replacement parts ensuring proper piston-to-cylinder clearance.
- When installing a standard size piston, make sure to match each piston with a cylinder as follows:
  A. Each piston has a stamped number 1 or 2. These numbers represent the outer diameter of the piston (Figure 99).

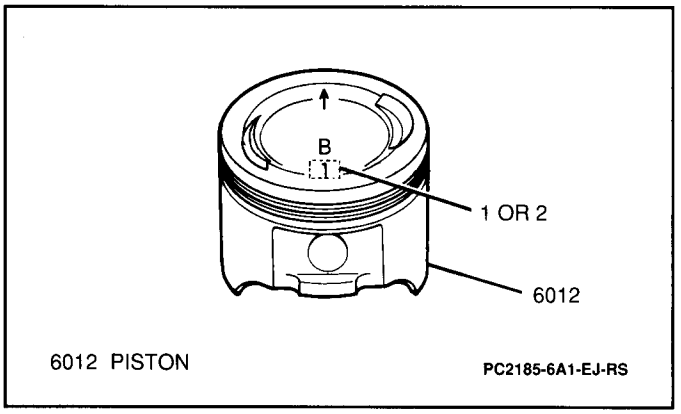

Figure 99 Piston Diameter Identification

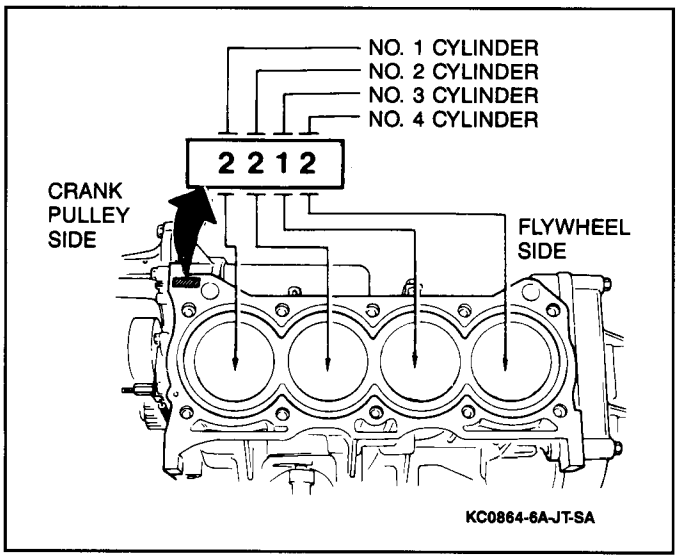

Figure 100 Cylinder Diameter Identification

B. There are also stamped numbers 1 or 2 on the cylinder block (Figure 100). The first number indicates the inner diameter of the No. 1 cylinder; the second number, the No. 2 cylinder; the third number, the No. 3 cylinder; and the fourth number, the No. 4 cylinder.

C. The stamped numbers on the pistons must correspond with the numbers stamped on the cylinder block for the stamped piston and cylinder number diameter specifications (Figure 101).

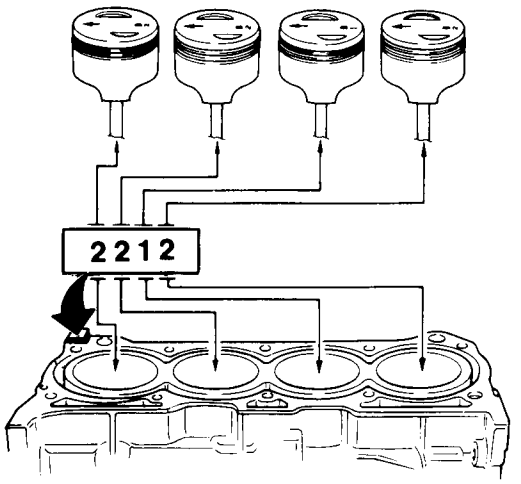

PISTON		CYLINDER		
NUMBER AT THE TOP (MARK)	OUTSIDE DIAMETER	NUMBER (MARK)	BORE DIAMETER	PISTON-TO-CYLINDER CLEARANCE
1	74.98–74.99 mm (2.9520–2.9524")	1	75.01–75.02 mm (2.9531–2.9535")	0.02–0.04 mm (0.0008–0.0015")
2	74.97–74.98 mm (2.9516–2.9520")	2	75.00–75.01 mm (2.9528–2.9531")	0.02–0.04 mm (0.0008–0.0015")

PC2186-6A1-EJ-RS

Figure 101 Cylinder-to-Piston Orientation

1. Connecting rod to piston by applying engine oil to piston pin holes, piston and the connecting rod. Fit connecting rod to piston (Figure 102).

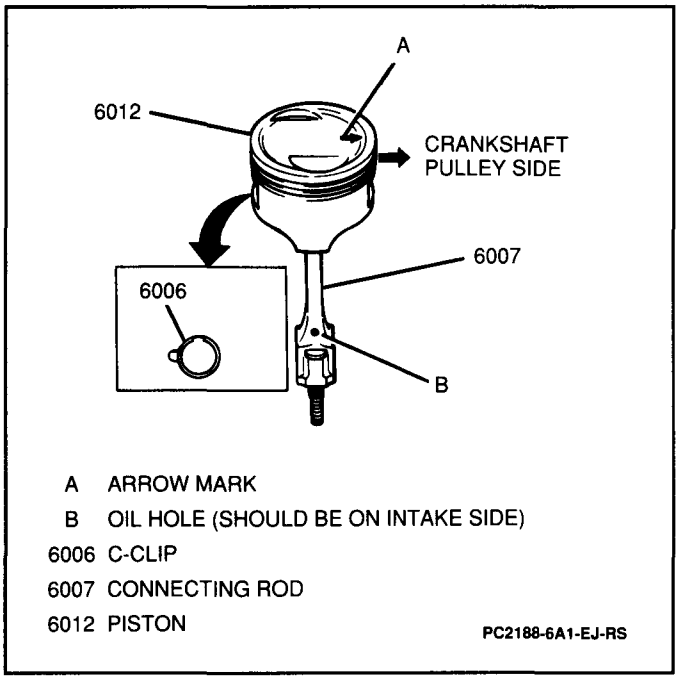

Figure 102 Piston-to-Connecting Rod Orientation

2. Piston pin to piston assembly; secure with two C-clips.
3. Oil ring to piston head.
4. Compression rings to piston head using a piston ring expander.

Important

- The compression rings have an "R," "RN," or "T" identification mark stamped on one side. When installing these rings to the piston, direct marked side of each ring toward the top of the piston (Figure 103).

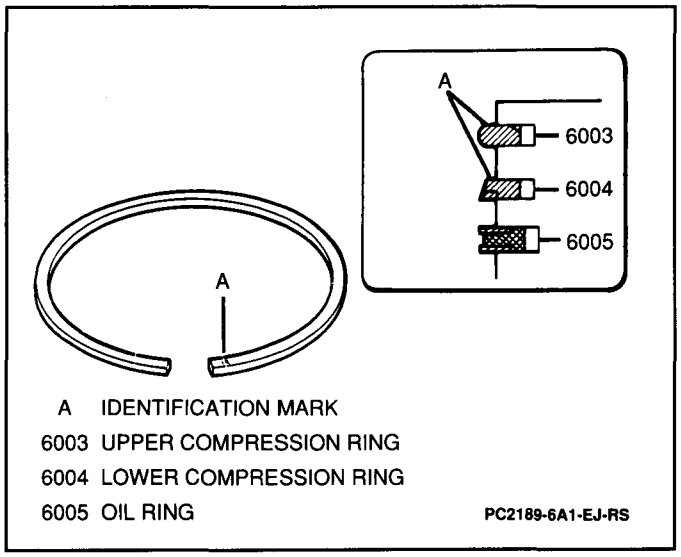

Figure 103 Piston Ring Installation

- The upper compression ring differs from the lower compression ring in thickness, shape, and color of cylinder wall contact surface (Figure 103). When installing the oil ring, install the spacer first and then the two rails.
- Distribute the end gap of each ring as shown in Figure 104.

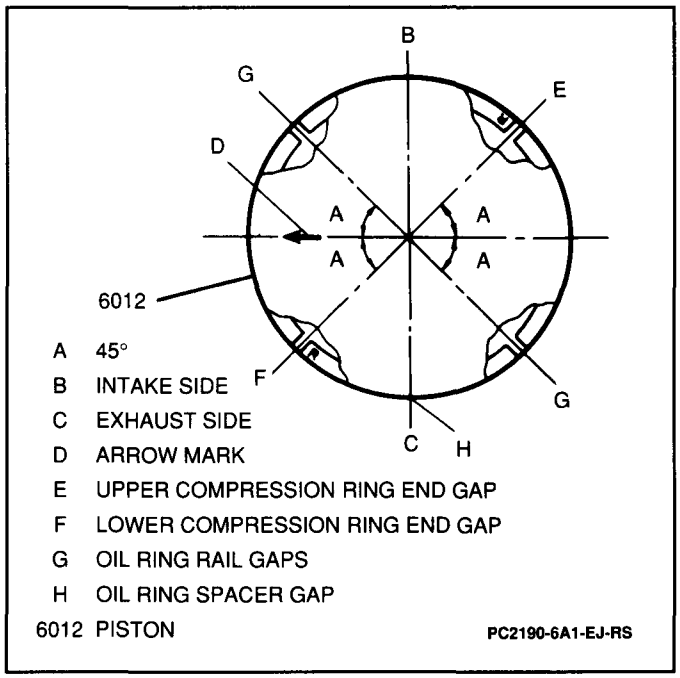

Figure 104 Piston Ring End Gap Positioning

Piston Rings

Figure 105

Measure

- Piston ring end gap by inserting each piston ring into cylinder bore, positioning ring at a point 130 mm (5.12-inches) from the top. Use the top of a piston to push ring in squarely. Measure ring end gap with a feeler gage (Figure 105). The cylinder bore top must be free of carbon before inserting the piston ring.

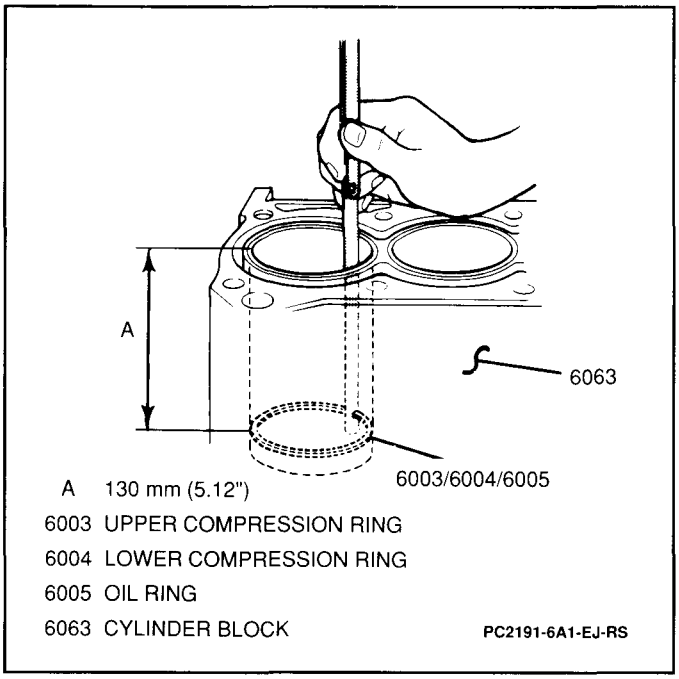

Figure 105 Measuring Piston Ring End Gap

- Piston upper compression ring end gap specification is 0.20 to 0.35 mm (0.0079 to 0.0137-inch).
- Piston lower compression ring end gap specification is 0.20 to 0.35 mm (0.0079 to 0.0137-inch).
- Piston oil ring end gap specification is 0.20 to 0.70 mm (0.0079 to 0.0275-inch).

Piston Pins

Figure 106

Inspect

- Piston pin should fit into piston bore easily at normal room temperature.

Measure

Tool Required:
J 26900-1 Outside Micrometer

1. Connecting rod bore inside diameter using a telescoping micrometer. Record measurement. Standard connecting rod bore inside diameter is 19.003 to 19.011 mm (0.7481 to 0.7485-inch). If the connecting rod bore is out of specification, replace the connecting rod.
2. Piston pin diameter using a J 26900-1 (Figure 106). Record measurement. Standard piston pin diameter is 18.995 to 19.000 mm (0.7478 to 0.7480-inch). If the piston pin diameter is out of specification, replace the piston pin.

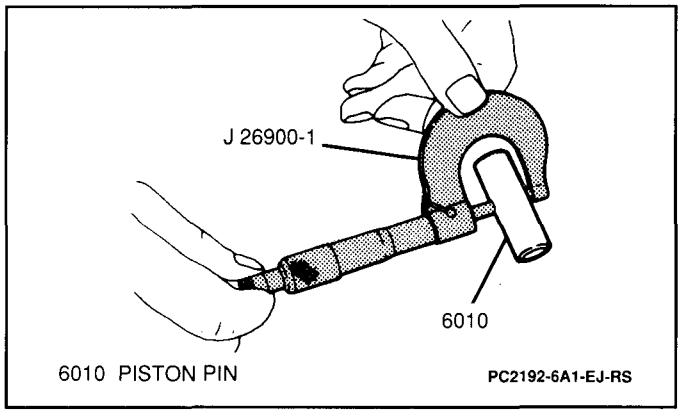

Figure 106 Measuring Piston Pin Diameter

- Subtract piston pin diameter from connecting rod bore inside diameter to obtain piston pin clearance. Piston pin clearance specification is 0.003 to 0.016 (0.0001 to 0.0006-inch). If the piston pin clearance exceeds 0.05 mm (0.002-inch), replace the connecting rod and/or piston pin.

Cylinders

Figure 107

Inspect

- Cylinder walls for scratches, gouges, roughness, or ridges which indicate excessive wear.

  NOTICE: If cylinder bore is very rough, deeply scratched or ridged, rebore cylinder and use oversize piston. If reboring of any cylinder is needed, it will be necessary to rebore all four cylinders to the same next oversize.

Measure

Tool Required:
J 8087 Cylinder Bore Gage

- Cylinder bore in thrust and axial directions at two points, 50 mm and 105 mm (1.96-inches and 4.13-inches) from top of cylinder using J 8087 (Figure 107). If the cylinder bore exceeds 75.15 mm (2.9586-inches), the cylinders must be rebored and an oversize piston installed.

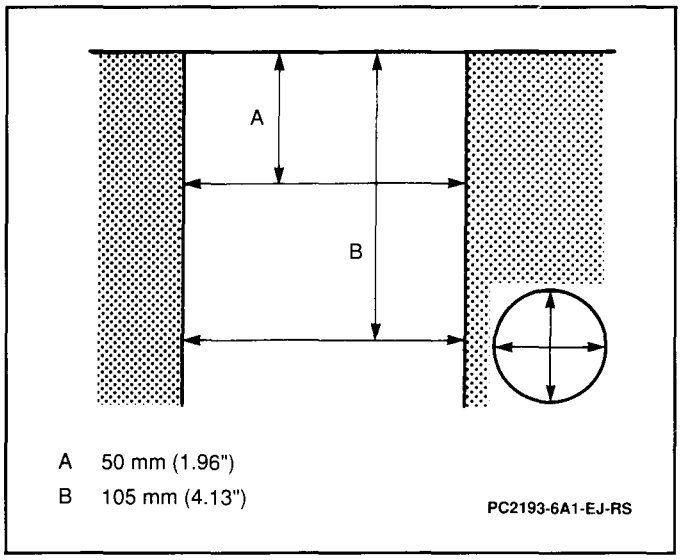

Figure 107 Cylinder Bore Measurement Positions

- Take the difference between the thrust and axial measurements of the upper position and the thrust and axial measurements of the lower position. This is the taper measurement.
- Take the difference between the thrust and axial measurements at each of the positions. This is the out-of-round measurement.
- If the taper and/or the out-of-round measurement exceeds the maximum specification of 0.10 mm (0.0039-inch), the cylinder must be rebored.

Connecting Rods

Figure 108

Measure

1. Connecting rod side clearance using a feeler gage with connecting rod fitted and connected to crankshaft (Figure 108). Connecting rod side clearance specification is 0.10 to 0.20 mm (0.0039 to 0.0078-inch). If the side clearance exceeds 0.35 mm (0.0137-inch), the connecting rod must be replaced.

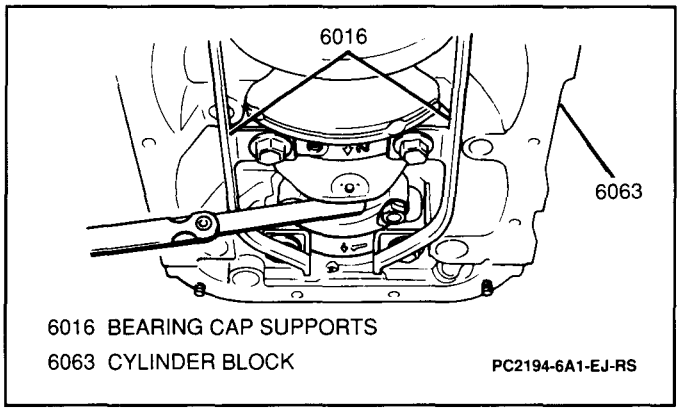

Figure 108 Connecting Rod Side Clearance

2. Connecting rod alignment by mounting connecting rod on an aligner and measuring for bow and twist of the connecting rod. If the connecting rod bow is more than 0.05 mm (0.0020-inch) and/or twist is more than 0.10 mm (0.0039-inch), the connecting rod must be replaced.

Crankshaft and Connecting Rod Bearings

Figures 109, 110 and 111

Inspect

1. Crankshaft for uneven wear or damage. If crankshaft is damaged, it must be replaced.
2. Connecting rod bearings for signs of fusion, pitting, burn or flaking and observe contact pattern. Any connecting rod bearing found in defective condition must be replaced.

- Two kinds of connecting rod bearings are available: standard size and a 0.25 mm (0.0098-inch) undersize bearing. To distinguish them, the undersize bearing has the stamped number "US025" on its back side (Figure 109). The standard size bearing has no stamped number.

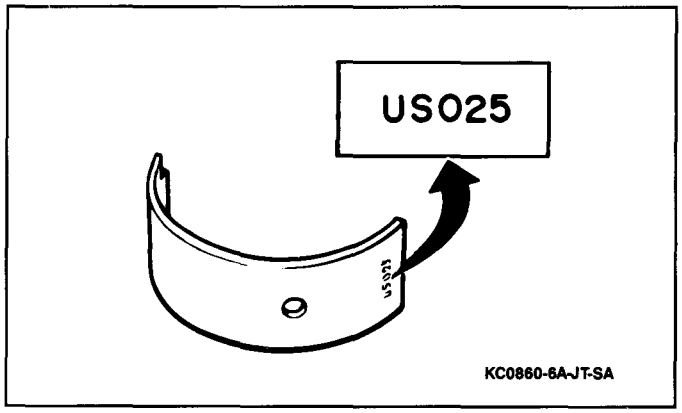

Figure 109 0.25 mm (0.0098-inch) Undersize Connecting Rod Bearing

Measure

Tool Required:
J 26900-2 Outside Micrometer

1. Crankshaft diameter and out-of-round measurement using a J 26900-2.
   - Crankshaft standard size diameter specification is 43.982 to 44.000 mm (1.7316 to 1.7323-inches).
   - 0.25 mm (0.0098-inch) undersize crankshaft diameter specification is 43.732 to 43.750 mm (1.7217 to 1.7224-inches).
   - Crankshaft out-of-round specification is a maximum of 0.01 mm (0.0004-inch).

   If the crankshaft is out of specification, the crankshaft must be replaced as necessary or ground to the undersize diameter specification and the connecting rod bearing replaced with the undersized bearings.

Clean

- Connecting rod bearing and crankshaft.

2. Connecting rod bearing clearance.
   A. Install connecting rod bearing in connecting rod and connecting bearing cap.
   B. Place a piece of plastic-type gaging material the full width of the connecting rod bearing (parallel to crankshaft), avoiding the oil passage hole.
   C. Install the connecting rod bearing cap to the connecting rod with the arrow mark on the cap facing toward the crankshaft pulley (Figure 110).

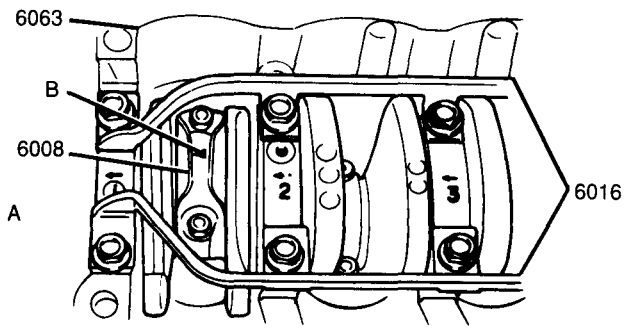

A CRANKSHAFT PULLEY SIDE
B ARROW MARK
6008 CONNECTING ROD BEARING CAP
6016 BEARING CAP SUPPORTS
6063 CYLINDER BLOCK
PC2195-6A1-EJ-RS

Figure 110 Installing Connecting Rod Bearing Cap

NOTICE: Apply engine oil to the connecting rod bolts prior to installation and never turn the crankshaft with the plastic-type gaging material installed.

Tighten

- Connecting rod bearing cap bolts to 35 N·m (26 lb.ft.).

   D. Remove the connecting rod bearing cap from the connecting rod and, using a scale on the plastic-type gaging material envelope, measure the connecting rod bearing clearance at the widest point of the plastic-type gaging material (Figure 111). Connecting rod bearing clearance specification: 0.020 to 0.050 mm (0.0008 to 0.0019-inch) with a limit of 0.080 mm (0.0031-inch). If connecting rod bearing clearance is greater than 0.080 mm (0.0031-inch), use a new standard size bearing and remeasure clearance. If clearance still cannot be brought into specification, the crankshaft must be ground to the undersize diameter specification and undersized bearing used in place of the standard size connecting rod bearing.

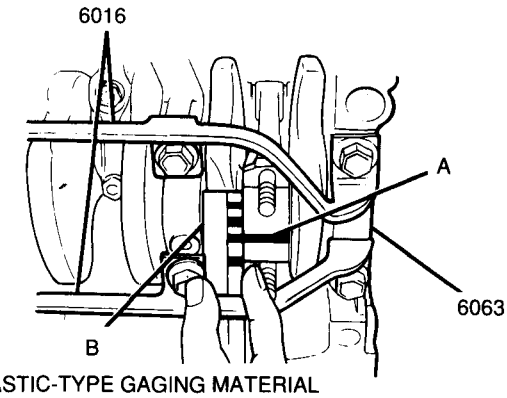

A PLASTIC-TYPE GAGING MATERIAL
B SCALE
6016 BEARING CAP SUPPORTS
6063 CYLINDER BLOCK
PC2196-6A1-EJ-RS

Figure 111 Measuring Connecting Rod Bearing Clearance

MAIN BEARINGS

Figures 112 and 113

Remove or Disconnect

1. Engine oil pan and oil pump strainer from cylinder block. Refer to "Engine Oil Pan and Oil Pump Strainer" earlier in this section.
2. Ten bolts and bearing cap supports, main bearing caps and main bearing lower half.
3. Main bearing upper half.

Inspect

- Main bearings for pitting, scratches, wear or damage. If any of these conditions are found, replace both upper and lower halves of main bearings.

Important

- Any time main bearings must be replaced, both the upper and lower half should be replaced as a set. Never replace only one half.

Install or Connect

Important

- The main bearing upper half has an oil groove. Install with oil groove to cylinder (Figure 112).

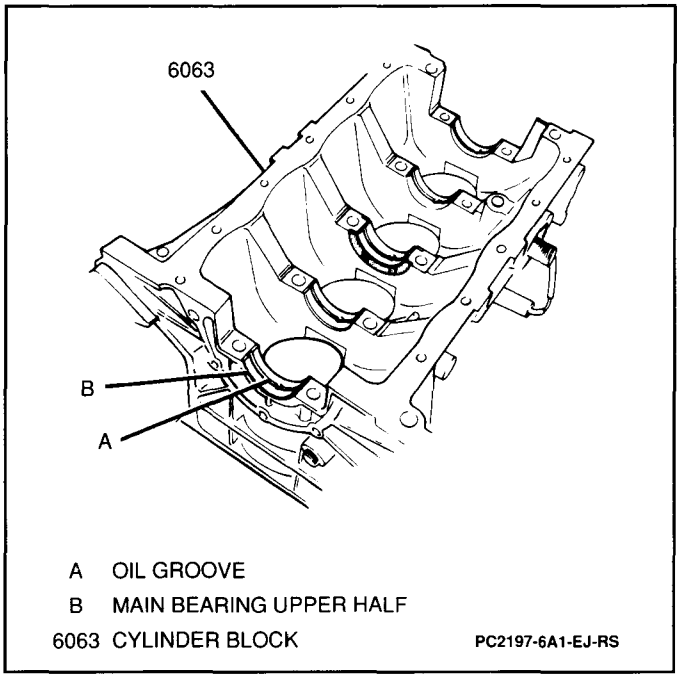

Figure 112 Main Bearing Upper Half

1. Main bearing upper half.
2. Bearing cap supports and main bearing caps to cylinder block. Install each cap in ascending order of numbers 1, 2, 3, 4 and 5 starting from the crankshaft pulley side and going to the flywheel side. Make sure all arrow marks point toward crankshaft pulley side (Figure 113).

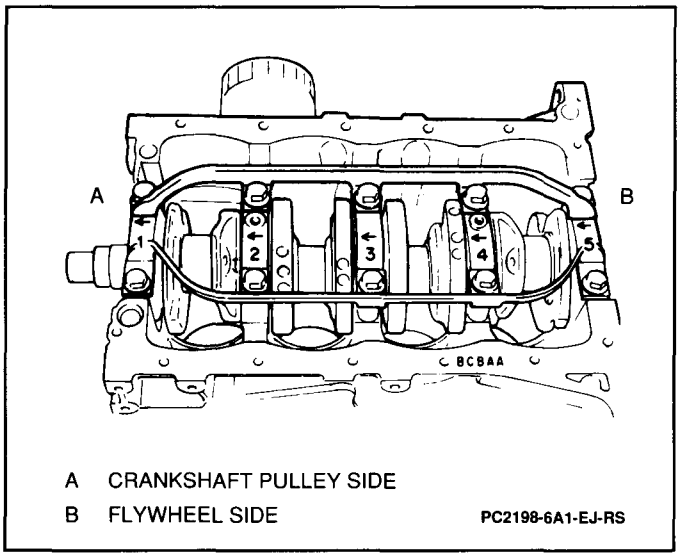

Figure 113 Installing Main Bearing Caps

Tighten

- Main bearing cap bolts to 54 N·m (40 lb.ft.).

Important

- Gradual and uniform tightening is important for main bearing cap bolts.
- After tightening main bearing bolts, check to be sure that crankshaft rotates smoothly when turned by hand.

3. Engine oil pump strainer and oil pan to cylinder block. Refer to "Engine Oil Pan and Oil Pump Strainer" earlier in this section.

Main Bearing Clearance

Figures 113 and 114

1. Remove main bearing caps.
2. Clean main bearings and main journals.
3. Place a piece of plastic-type gaging material across the full width of main bearing (parallel to crankshaft) on the journal while avoiding the oil hole.
4. Install main bearing caps and bearing cap supports to cylinder block. Install each cap in ascending order of numbers 1, 2, 3, 4 and 5 starting from the crankshaft pulley end and going to the flywheel end. Make sure all arrow marks point toward crankshaft pulley end (Figure 113).

Tighten

- Main bearing cap bolts to 54 N·m (40 lb.ft.).

NOTICE: Do not rotate crankshaft while plastic-type gaging material is installed.

Important

- Main bearing caps MUST be torqued to specification in order to obtain accurate measurement.

5. Remove main bearing cap and, using scale on plastic-type gaging material envelope, measure plastic-type gaging material width at its widest point (Figure 114). Standard main bearing clearance is 0.02 to 0.04 mm (0.0008 to 0.0016-inch). If clearance exceeds 0.06 mm (0.0023-inch), replace main bearing. Always replace both upper and lower bearing halves as a set.

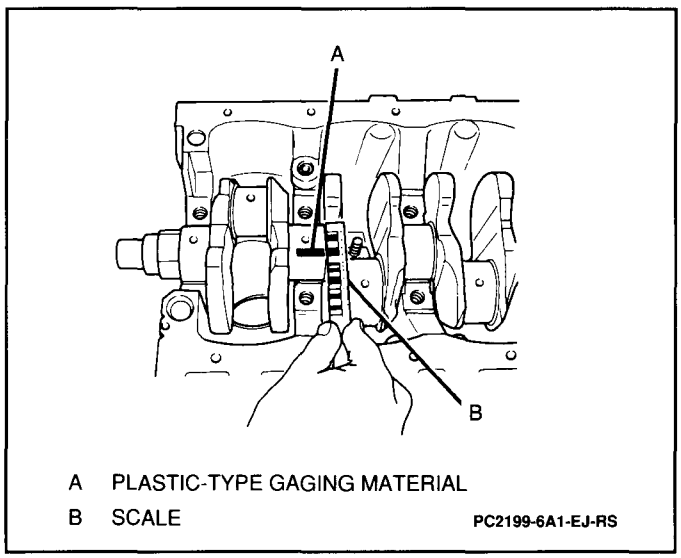

Figure 114 Measuring Main Bearing Clearance

Important

- A new standard main bearing may produce proper clearance. If not, it will be necessary to regrind crankshaft journal and use a 0.25 mm (0.0098-inch) undersize bearing. For procedures on main bearing selection, refer to "Selection of Main Bearings" later in this section. After selecting new main bearing, recheck clearance as described above.

Selection of Main Bearings

Standard Bearings

Figures 115 through 118

New standard main bearings should be installed in cases where main bearing is damaged or main bearing clearance is out of specification. Select new main bearings according to the following procedure.

1. Inspect the journal diameter by noting the five stamped numerals on crank web of No. 2 and No. 3 cylinders (Figure 115). The three numerals ("1," "2" and "3") represent the following journal diameters:

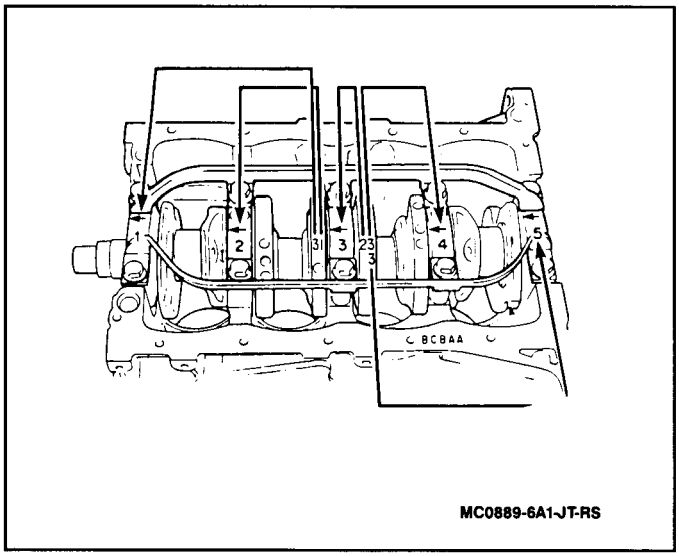

Figure 115 Stamped Numerals on Crank Webs of No. 2 and No. 3 Cylinders

- Stamped numeral "1" represents journal diameter of 51.994 to 52.000 mm (2.0470 to 2.0472-inches).
- Stamped numeral "2" represents journal diameter of 51.988 to 51.994 mm (2.0468 to 2.0470-inches).
- Stamped numeral "3" represents journal diameter of 51.982 to 51.988 mm (2.0465 to 2.0468-inches).

These journal diameter indicators correspond to the main bearing caps numbers "1," "2," "3," "4" and "5," respectively.

2. Inspect the main bearing cap bore diameter without main bearing. A five-letter code is stamped on the mating surface on the cylinder block (Figure 116). This code consists of a combination of three letters, "A," "B" or "C" and represents the main bearing cap bore diameters (without main bearing installed) of bearing caps "1," "2," "3," "4" and "5," respectively.

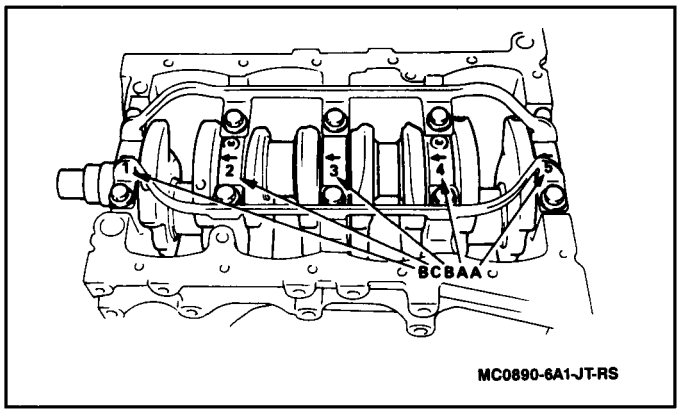

Figure 116 Stamped Letter on the Cylinder Block

- "A" represents a main bearing cap bore diameter of 56.000 to 56.006 mm (2.2047 to 2.2050-inches).
- "B" represents a main bearing cap bore diameter of 56.006 to 56.012 mm (2.2050 to 2.2052-inches).
- "C" represents a main bearing cap bore diameter of 56.012 to 56.018 mm (2.2052 to 2.2054-inches).

3. There are five sizes of standard bearings. To distinguish them, there is a paint mark on the center edge (Figure 117). Each color indicates the thickness at the center of the bearing.

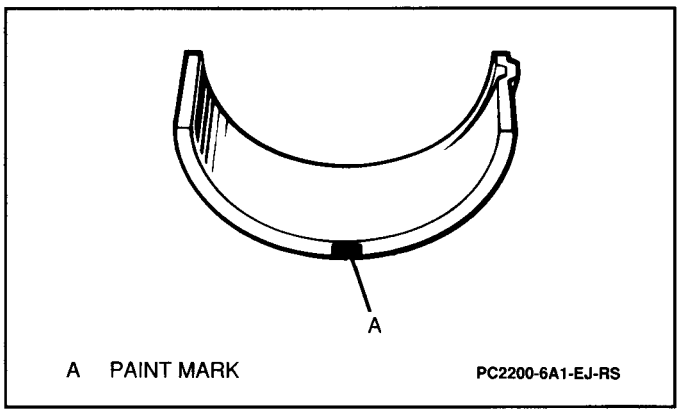

Figure 117 Standard Main Bearing Paint Mark

- "Green" represents a main bearing thickness of 1.996 to 2.000 mm (0.0786 to 0.0787-inch).
- "Black" represents a main bearing thickness of 1.999 to 2.003 mm (0.0787 to 0.0788-inch).
- Colorless (no paint) represents a main bearing thickness of 2.002 to 2.006 mm (0.0788 to 0.0789-inch).
- "Yellow" represents a main bearing thickness of 2.005 to 2.009 mm (0.0789 to 0.0790-inch).
- "Blue" represents a main bearing thickness of 2.008 to 2.012 mm (0.0790 to 0.0791-inch).

4. From the numbers stamped on the crank web of No. 2 and No. 3 cylinders and the letters stamped on the mating surface of the cylinder block, determine new standard bearing to be installed on the journal by referring to the "Standard Bearing Table" (Figure 118). For example, if the number stamped on the mating surface is "1" and the letter stamped on the mating surface is "B," install the new standard main bearing with "Black" to its journal.

		NUMERAL STAMPED ON CRANK WEB (JOURNAL DIAMETER)		
		1	2	3
LETTER STAMPED ON MATING SURFACE	A	GREEN	BLACK	COLORLESS
	B	BLACK	COLORLESS	YELLOW
	C	COLORLESS	YELLOW	BLUE
		NEW STANDARD BEARING TO BE INSTALLED.		

PC0904-6A1-EJ-RS

Figure 118 Standard Bearing Table

5. Inspect bearing clearance with new standard bearing installed. Refer to "Main Bearing Clearance" earlier in this section for procedure. If the clearance still exceeds the limit, use the next thicker bearing and recheck the clearance.
6. When replacing the crankshaft or the cylinder block for any reason, select new standard bearings to be installed by referring to the numbers stamped on the (new) crankshaft and the letters stamped on the mating surface of the (new) cylinder block.

Undersize Bearings

Figures 119 and 120

Tool Required:
J 26900-3 Outside Micrometer

A 0.025 mm (0.0098-inch) undersize bearing is available through GM SPO. To distinguish between them, each bearing has paint marks on one side (Figure 119). Each color indicates the following thickness at the center of the bearing:

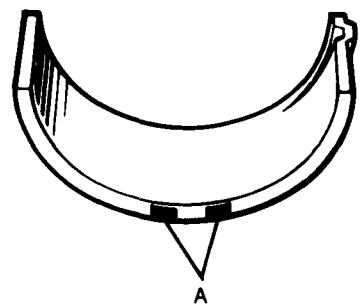

A PAINT MARKS PC2201-6A1-EJ-RS

Figure 119 Undersize Bearing Paint Marks

A. "Green" & "Red" represent bearing thickness of 2.121 to 2.125 mm (0.0830 to 0.0836-inch).
B. "Black" & "Red" represent bearing thickness of 2.124 to 2.128 mm (0.0836 to 0.0838-inch).
C. "Red" represents bearing thickness of 2.127 to 2.131 mm (0.0837 to 0.0839-inch).
D. "Yellow" & "Red" represent bearing thickness of 2.130 to 2.134 mm (0.0839 to 0.0840-inch).
E. "Blue" & "Red" represent bearing thickness of 2.133 to 2.137 mm (0.0840 to 0.0841-inch).

If 0.25 mm (0.0098-inch) undersize bearings are to be used, regrind the crankshaft journal as follows:

1. Regrind the crankshaft journal to a finished diameter of 51.732 to 51.750 mm (2.0367 to 2.0373-inches).
2. Using a J 26900-3, measure the reground journal diameter. The measurement must be taken in two directions, perpendicular to each other, in order to check for an out-of-round condition.
3. Using journal diameter measured in Step 2 and the letters stamped on mating surface of cylinder block, select undersize bearing to be installed by referring to the "Undersize Bearing Table" (Figure 120).

		MEASURED JOURNAL DIAMETER		
		51.744 – 51.750 mm (2.0371 – 2.0373")	51.738 – 51.744 mm (2.0369 – 2.0371")	51.732 – 51.738 mm (2.0367 – 2.0369")
LETTERS STAMPED ON MATING SURFACE OF CYLINDER BLOCK	A	GREEN & RED	BLACK & RED	RED ONLY
	B	BLACK & RED	RED ONLY	YELLOW & RED
	C	RED ONLY	YELLOW & RED	BLUE & RED
		UNDERSIZE BEARING TO BE INSTALLED.		

PC0905-6A1-EJ-RS

Figure 120 Undersize Bearing Table

4. Inspect bearing clearance with new undersize bearing installed. Refer to "Main Bearing Clearance" earlier in this section.

FLYWHEEL

Figure 121

Remove or Disconnect

1. Transmission from cylinder block. Refer to SECTION 7A (automatic transmission equipped vehicles) or SECTION 7B (manual transmission equipped vehicles).
2. Clutch from flywheel (manual transmission equipped vehicles). Refer to SECTION 7C.

Inspect

- If the ring gear is damaged, cracked or worn, replace the flywheel.
- If the surface contacting the clutch disc is damaged or excessively worn, replace the flywheel (manual transmission equipped vehicles).

Measure

Tools Required:
J 8001 Dial Indicator Set
J 26900-13 Magnetic Base

- Flywheel for face runout using a J 8001 with a J 26900-13. If the runout exceeds 0.2 mm (0.0078-inch), replace the flywheel (Figure 121).

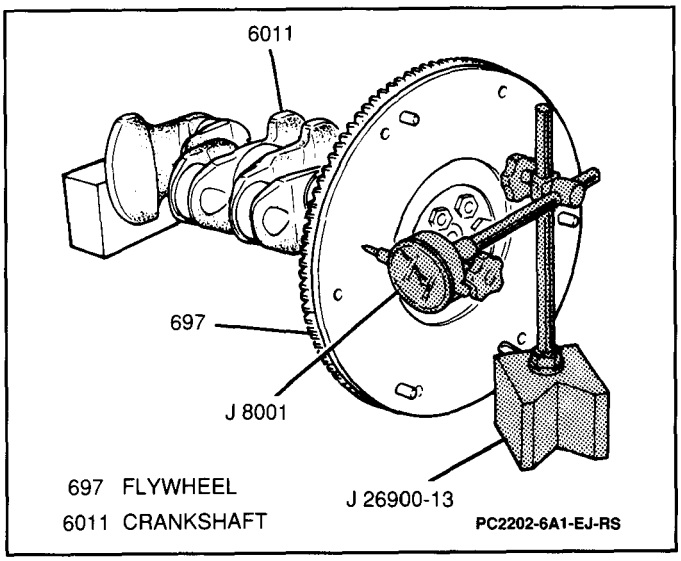

Figure 121 Measuring Flywheel Face Runout

- Mark the flywheel-to-engine position.
3. Six flywheel retaining bolts and flywheel from crankshaft.
4. Nylon clutch pilot bushing from crankshaft.

Clean

- Grease and dirt from flywheel outer surfaces using suitable solvent.

Install or Connect

1. Flywheel to crankshaft, aligning the flywheel-to-engine marks.

- Apply Loctite® 414 GM P/N 12345093, or equivalent, to the flywheel retaining bolt threads.

  NOTICE: Do not apply an excessive amount of sealant to the flywheel retaining bolt threads. Applying too much sealant will result in the sealant overflowing the bolt seat. This could cause the bolt to break loose during vehicle operation.

2. Flywheel retaining bolts to flywheel.

   Tighten

   - Flywheel retaining bolts to 78 N·m (58 lb.ft.).

3. Clutch to flywheel (manual transmission equipped vehicles). Refer to SECTION 7C.
4. Transmission to engine. Refer to SECTION 7A (automatic transmission equipped vehicles) or SECTION 7B (manual transmission equipped vehicles).

Flywheel Balancing (Automatic Transmission Equipped Vehicles)

Flywheel and torque converter imbalance can be corrected using the following procedure.

1. Change the position of the torque converter-to-flywheel 120 degrees at a time to cancel out engine and torque converter unbalance. Recheck in each position for vibration improvements.
2. If the unbalanced condition still exists, leave the torque converter-to-flywheel in the best balanced position. Install longer flywheel-to-torque converter bolts, adding and removing washers until the best balance is achieved.

   NOTICE: Be sure that the bolts are not bottoming in the holes. If a bolt bottoms the cover could be dented, causing internal clutch facing damage. Always rotate the torque converter by hand after adding washers to check for clearance.

Inspect

1. For missing or loose torque converter-to-flywheel bolts. Replace or tighten as necessary.
2. Torque converter for damage or missing balance weights. If the torque converter is damaged or balance weights are missing, replace the converter.

REAR MAIN SEAL

Figure 122

Remove or Disconnect

1. Transmission from vehicle. Refer to SECTION 7A (automatic transmission equipped vehicles) or to SECTION 7B (manual transmission equipped vehicles).
2. Pressure plate assembly and clutch disc (manual transmission equipped vehicles only). Refer to SECTION 7C.

- Mark the flywheel-to-engine position.

3. Six flywheel retaining bolts and flywheel from crankshaft.
4. Rear main seal (Figure 122).

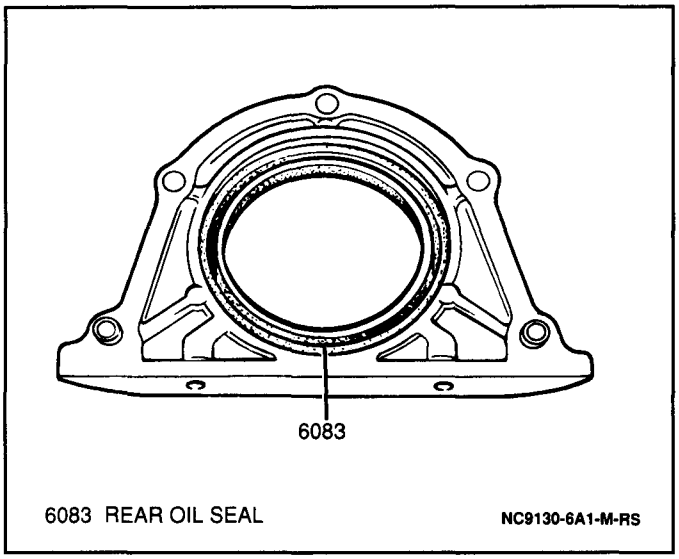

Figure 122 Rear Main Seal

Install or Connect

1. New rear main seal.

- Apply Loctite® 414 GM P/N 12345093, or equivalent, to the flywheel retaining bolt threads.

  NOTICE: Do not apply an excessive amount of sealant to the flywheel retaining bolt threads. Applying too much sealant will result in the sealant overflowing the bolt seat. This could cause the bolt to break loose during vehicle operation.

2. Flywheel; secure with six flywheel retaining bolts.

   Tighten

   - Flywheel retaining bolts to 78 N·m (58 lb.ft.).

   Important

   - After the rear main seal housing bolts are tightened, the gasket may extend past the rear main seal housing. Trim the excess with a sharp knife so the gasket is flush with the cylinder block.

3. Pressure plate assembly and clutch disc (manual transmission equipped vehicles only). Refer to SECTION 7C.
4. Transmission to vehicle. Refer to SECTION 7A (automatic transmission equipped vehicles) or to SECTION 7B (manual transmission equipped vehicles).

ENGINE ASSEMBLY

Figures 13, 14 and 15

Remove or Disconnect

Tools Required:
J 35271 Flywheel Holder
J 36854 Heavy Duty Automotive Engine Stand

- Discharge and recover refrigerant (if equipped with A/C). Refer to SECTION 1B.

- Relieve fuel pressure. Refer to SECTION 6C.
1. Negative (-) battery cable.
2. Positive (+) battery cable.
- Open fuel filler cap to relieve pressure in fuel tank. After relieving pressure, install cap.
- Drain coolant from radiator. Refer to SECTION 6B.
3. Two engine mount-to-exhaust bracket bolts, one exhaust bracket-to-exhaust manifold nut and exhaust bracket from vehicle.
- Raise and suitably support vehicle. Refer to SECTION 0A.
4. Four bolts and front skid plate from vehicle (if equipped).
5. Clutch housing lower plate (manual transmission equipped vehicles, refer to SECTION 7B) or torque converter housing lower plate (automatic transmission equipped vehicles, refer to SECTION 7A).
6. Two bolts and clutch cable from clutch release arm and bracket (manual transmission equipped vehicles).
7. Automatic transmission fluid hoses from clamps (automatic transmission equipped vehicles).
8. Clutch lower plate (manual transmission equipped vehicles).
9. Torque converter lower plate (automatic transmission equipped vehicles).
10. Torque converter bolts (automatic transmission equipped vehicles) using a J 35271 to lock drive plate.
11. Three nuts and front pipe/three way catalytic converter (TWC) from exhaust manifold.
12. Clutch cable from retaining straps (manual transmission equipped vehicles).
- Support transmission and remove two bolts, separating from cylinder block. Refer to SECTION 7A (automatic transmission equipped vehicles) or SECTION 7B (manual transmission equipped vehicles).
13. Starter motor. Refer to SECTION 6D2.
14. Engine mount lower nuts and washers.
- Lower vehicle.
15. Upper coolant hose from radiator.
16. Air conditioner (A/C) compressor (if equipped). Refer to SECTION 1B.
17. Four bolts securing shroud to radiator and four fan clutch mounting nuts.
18. Shroud, fan clutch and cooling fan together.
19. Air intake case from throttle body fuel injection (TBI) unit.
20. Accelerator cable and automatic transmission kickdown cable (automatic transmission equipped vehicles) from throttle body fuel injector (TBI) unit.
21. Positive crankcase ventilation (PCV) valve, EGR valve and EGR temperature sensor (California specification vehicles) from intake manifold.
22. Coolant hose from the IAC valve.
23. IAC air hose from IAC valve.
24. Fuel feed pipe from TBI unit and intake manifold (Figure 15).
25. Fuel return hose from fuel pressure (FPR) regulator (Figure 15).
26. PCV hose from PCV valve.
27. MAP sensor hose and brake booster hose from intake manifold.
28. Coolant hose from thermostat housing.
29. Coolant bypass and heater inlet hoses from intake manifold.
30. Lower coolant hose from radiator.
31. The following electrical connectors:
    - Throttle position (TP) sensor.
    - Idle air control (IAC) valve.
    - Throttle opener solenoid vacuum (TO SV) valve.
    - Oxygen sensor (O2S).
    - Intake air temperature (IAT) sensor (Figure 13).
    - Manifold absolute pressure (MAP) sensor.
    - Engine coolant temperature (ECT) sensor (Figure 13).
    - ECT sensor sending unit (Figure 13).
    - A/C ECT switch (A/C equipped vehicles).
    - Wiring harness from retaining clamps.
32. The following vacuum hoses:
    - Throttle opener solenoid vacuum (TO SV) valve (Figure 14).
    - Solenoid purge (SP) valve (Figure 14).
33. Distributor. Refer to SECTION 6D4.
34. Hood from vehicle. Refer to SECTION 10-5.
- Install engine hoist to engine.
35. Engine mounting bracket-to-frame bolts.

Important

- Before lifting engine, check to ensure all hoses, pipes, electric wires and cables are disconnected from engine.

36. Engine assembly from vehicle by sliding assembly toward the front side of engine compartment; then, carefully lift engine assembly from vehicle, verifying clearance on all sides.
37. Six bolts and flywheel from crankshaft.
- Mount engine assembly on J 36854 and disconnect engine hoist.

Install or Connect

1. Engine hoist and remove engine assembly from J 36854.
2. New rear main seal.
- Apply Loctite® 414 GM P/N 12345093, or equivalent, to the flywheel retaining bolt threads.

NOTICE: Do not apply an excessive amount of sealant to the flywheel retaining bolt threads. Applying too much sealant will result in the sealant overflowing the bolt seat. This could cause the bolt to break loose during vehicle operation.

3. Flywheel; secure with six flywheel retaining bolts.

Tighten

- Flywheel retaining bolts to 78 N·m (58 lb.ft.).

4. Pressure plate assembly and clutch disc (manual transmission equipped vehicles only). Refer to SECTION 7C.

5. Engine assembly, lowering into front of engine compartment while ensuring clearance on all sides, then slide assembly toward rear.
6. Transmission to cylinder block. Refer to SECTION 7A (automatic transmission equipped vehicles) or SECTION 7B (manual transmission equipped vehicles). Remove engine hoist.
- Support engine and transmission.
- Raise and suitably support vehicle. Refer to SECTION 0A.
7. Three right-side engine mount-to-engine bracket bolts.

Tighten

- Right-side engine mount-to-engine bracket bolts to 55 N·m (40 lb.ft.).

8. Two left-side engine mount-to-engine bolts. Do not tighten fully.

Tighten

- Left-side engine mount-to-engine bolts to 55 N·m (40 lb.ft.).

9. Front pipe/TWC to exhaust manifold; secure with three nuts.

Tighten

- Front pipe/TWC assembly-to-exhaust manifold nuts to 50 N·m (37 lb.ft.).

10. Torque converter bolts (automatic transmission equipped vehicles) using a J 35271 to lock drive plate.

Tighten

- Torque converter bolts to 55 N·m (40 lb.ft.).

11. Clutch housing lower plate (manual transmission equipped vehicles).
12. Torque converter lower plate (automatic transmission equipped vehicles).
13. Starter motor. Refer to SECTION 6D2.
14. Clutch cable to bracket and clutch release arm (manual transmission equipped vehicles). Refer to SECTION 7C.
15. Lower coolant hose to radiator; secure with hose clamp.
16. Front skid plate (if equipped); secure with four bolts.

Tighten

- Front skid plate bolts to 55 N·m (40 lb.ft.).

17. Engine oil drain plug with new gasket.

Tighten

- Engine oil drain plug to 35 N·m (26 lb.ft.).

18. Automatic transmission fluid hoses to clamps (automatic transmission equipped vehicles).
- Lower vehicle.
19. Heater inlet and outlet hoses.
20. A/C compressor (if equipped). Refer to SECTION 1B.
21. Air intake case to TBI unit.
22. Accelerator cable and automatic transmission kickdown cable (automatic transmission equipped vehicles) to TBI unit.
23. PCV valve, EGR valve and EGR temperature sensor (California specification vehicles) to intake manifold.
24. Coolant hose to the IAC valve.
25. IAC air hose to IAC valve.
26. Fuel feed pipe to TBI unit and intake manifold (Figure 15).
27. Fuel return hose to FPR regulator (Figure 15).
28. PCV hose to PCV valve.
29. MAP sensor hose and brake booster hose to intake manifold.
30. Coolant hose to thermostat housing.
31. Coolant bypass and heater inlet hoses to intake manifold; secure with hose clamps.
32. Lower coolant hose to radiator; secure with hose clamp.
33. The following electrical connectors:
    - TP sensor.
    - IAC valve.
    - TO SV valve.
    - O2S.
    - IAT sensor.
    - MAP sensor.
    - ECT sensor.
    - ECT sensor sending unit.
    - A/C ECT switch (A/C equipped vehicles).
    - Wiring harness to retaining clamps (Figure 16).
34. The following vacuum hoses:
    - TO SV valve.
    - SP valve.
35. Accelerator cable and automatic transmission kickdown cable (automatic transmission equipped vehicles) to TBI unit.
36. A/C condenser (if equipped). Refer to SECTION 1B.
37. Air intake to TBI.
38. Fan clutch, cooling fan and shroud; secure with four fan clutch nuts and four shroud bolts.

Tighten

- Fan clutch nuts to 11 N·m (97 lb.in.).
- Shroud bolts to 11 N·m (97 lb.in.).

39. Hood to vehicle. Refer to SECTION 10-5.
40. Negative (-) and positive (+) battery cables.

Tighten

- Negative (-) battery cable-to-negative (-) battery terminal retainer to 15 N·m (11 lb.ft.).
- Positive (+) battery cable-to-positive (+) battery terminal retainer to 15 N·m (11 lb.ft.).

- Refill coolant. Refer to SECTION 6B.
- Evacuate and charge A/C system (if equipped). Refer to SECTION 1B.

697 FLYWHEEL
6011 CRANKSHAFT
6013 MAIN SEAL HOUSING
6014 MAIN SEAL GASKET
6015 THRUST BEARING
6016 BEARING CAP SUPPORTS
6017 MAIN BEARING CAP
6018 MAIN SEAL
6019 INPUT SHAFT BEARING
6020 MAIN BEARING
6063 CYLINDER BLOCK

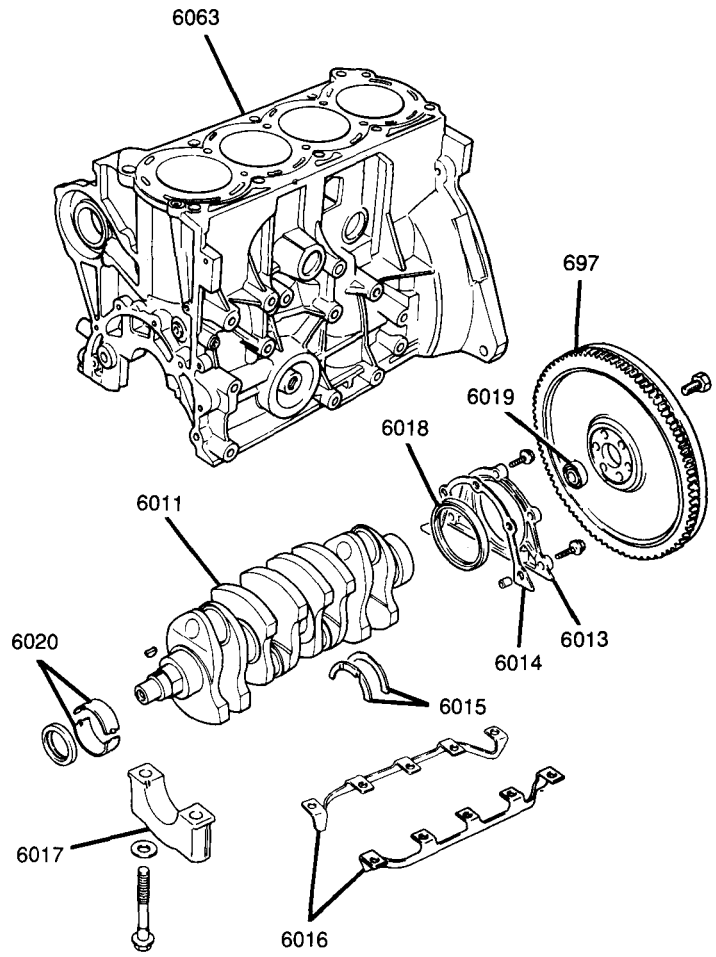

Figure 123 Main Bearings, Crankshaft and Cylinder Block

Cylinder Block Service

Figures 5, 29, 30 through 35, 46, 74 through 77, 80 through 85, 91, 92, 93 and 123

Remove or Disconnect

1. Secondary (spark plug) wires.
2. Four bolts and cylinder head cover.
3. Five bolts and crankshaft pulley.

Important

- It is not necessary to remove the crankshaft pulley center bolt when removing the crankshaft pulley.

4. Eight bolts, one nut and timing belt outside cover from engine.
- Loosen tensioner stud and remove tensioner spring from tensioner plate and tensioner spring screw (Figure 29).
5. Timing belt from crankshaft timing belt gear and camshaft timing gear by rotating tensioner plate counterclockwise.
6. One hose clamp and coolant bypass hose from coolant inlet pipe.
7. Ten bolts and cylinder head assembly. Remove bolts starting in center and working toward ends in two or three passes to avoid warpage of the cylinder head.
8. Three right-side engine mount-to-engine bracket bolts and right-side engine mount from engine.
9. Three left-side engine mount-to-engine bracket bolts and left-side engine mount from engine.
10. Generator mounting bolts, nuts and generator with generator/coolant pump drive belt from engine.
11. One bolt and guide tube from cylinder block (Figure 5).
12. Guide tube seal from oil pump body.
13. One bolt and coolant inlet pipe from cylinder block.
14. Five bolts and coolant pump from cylinder block.
15. Oil pressure switch from cylinder block.
16. Generator mounting bracket.
- Place a drain pan beneath engine oil pan to catch escaping oil.
17. Engine oil drain plug and gasket, allowing engine oil to drain (Figure 74).

18. Sixteen bolts, two nuts and engine oil pan from cylinder block (Figure 75).
19. Two bolts and oil pump strainer from cylinder block.
20. Crankshaft timing gear bolt (Figure 80).
21. Crankshaft timing gear.
22. Seven bolts and oil pump assembly, gasket, rubber oil pump-to-coolant pump seals and two guide pins from cylinder block (Figure 81).
- Decarbon top of cylinder bores.
23. Connecting rod bearing cap bolts, connecting rod bearing caps and connecting rod bearings.
- Place a small piece of hose over threads of connecting rod to protect threads, journal and cylinder bore during removal and installation.
24. Pistons and connecting rods from cylinder block through the top of cylinder bores.
25. Main bearing cap bolts, bearing cap supports, main bearing caps and main bearings.
26. Crankshaft from cylinder block.

Clean

1. Sealing material from mating surfaces.
- Boil cylinder block in caustic solution and flush with clean water or steam.

NOTICE: Caustic cleaning solution destroys the bearing material. All bearings left in block must be replaced after cleaning with a caustic solution. Do not clean bearing material or aluminum parts with caustic solutions.

2. Engine oil passages.
3. All blind holes.
- Spray or wipe cylinder bores and machined surfaces with clean engine oil.

Inspect

- Cylinder block for cracks in the cylinder walls, coolant jacket and main bearing webs. Replace if any cracks are found.

Measure

Tool Required:
J 26900-3 Outside Micrometer

1. Cylinder block-to-cylinder head gasket surface for distortion and flatness using a straightedge and a feeler gage. If specification is exceeded, correction is necessary. Minor irregularities can be carefully machined. Standard distortion is 0.03 mm (0.0012-inch). If distortion after any correction exceeds 0.06 mm (0.0024-inch), replace the cylinder block.
- When any one cylinder needs reboring, then all other cylinders must be rebored at the same time.
- Select oversize pistons according to the amount of cylinder wear.
  - Oversized piston of 0.25 has diameter of 75.220 to 75.230 mm (2.9614 to 2.9618-inches).
  - Oversized piston of 0.50 has diameter of 75.470 to 75.480 mm (2.9713 to 2.9716-inches).
2. Piston diameter using a J 26900-3.
- Calculate the cylinder bore diameter to be rebored.
  D = A+B-C when:
  D = Cylinder bore diameter to be rebored.
  A = Piston diameter as measured.
  B = Piston clearance = 0.03 mm (0.00118-inch).
  C = Allowance for honing = 0.02 mm (0.0008-inch).

NOTICE: Before reboring, install all main bearing caps and tighten to specification to avoid distortion of bearing bores.

- Rebore and hone cylinders to calculated dimension.
3. Piston clearance after honing is completed.

Install or Connect

Tools Required:
J 34853 Crankshaft Oil Seal Guide
J 8037 Piston Ring Compressor
J 34853 Crankshaft Oil Seal Guide

NOTICE: To prevent damage to cylinder block or parts installed:
- All parts to be installed must be perfectly clean.
- Be sure to apply engine oil to the crankshaft journals, journal bearings, thrust bearings, crankpins, connecting rod bearings, pistons, piston rings and cylinder bores.
- Journal bearings, bearing caps, connecting rod, rod bearings, rod bearing caps, pistons and piston rings are in combination sets. Do not disturb the combinations and check to ensure that each part goes back to where it came from when installing.

1. Main bearings lower half to crankshaft: install the half with oil groove (upper half) to cylinder block.
2. Thrust bearings to cylinder block between No. 2 and No. 3 cylinders. Face the oil groove sides to counterweights.
3. Crankshaft to cylinder block.

Important

- On each main bearing cap, the arrow mark and number are embossed. When installing each main bearing cap to the cylinder block, point the arrow mark toward the crankshaft pulley side and install each cap from crankshaft pulley end to flywheel in order "1," "2," "3," "4" and "5."

4. Five main bearing caps and two bearing cap supports; secure with ten main bearing cap bolts.

Important

- Gradual and uniform tightening is important for main bearing cap bolts.
- After tightening main bearing bolts, check to be sure that crankshaft rotates smoothly when turned by hand.

Tighten

- Main bearing cap bolts to 54 N·m (40 lb.ft.).

- Apply light coat of clean engine oil to pistons, rings, cylinder walls, connecting rod bearings and crank pins.

- Guide hoses over the connecting rod bolts to prevent damage to bearing journal and connecting rod bolt threads when installing connecting rods (Figure 91).

5. Piston and connecting rod into cylinder bore using a J 8037, ensuring arrow mark on top of the piston points to crankshaft pulley end (Figures 92 and 93). Use a hammer handle to tap piston head and install piston into cylinder bore, keeping the J 8037 pressed securely against the top of the cylinder block until all piston rings have entered cylinder bore.

- Remove hose pieces from connecting rod bolts.

6. Connecting rod bearing cap to connecting rod; secure with two nuts.

Important

- Be sure to point arrow mark on cap toward the crankshaft pulley side.

Tighten

- Connecting rod bearing cap nuts to 35 N·m (26 lb.ft.).

7. Rear main seal housing and new gasket to engine; secure with five rear main seal housing bolts. There are two different bolt lengths. Ensure correct placement.

Tighten

- Rear main seal housing bolts to 12 N·m (106 lb.in.).

Important

- After the rear main seal housing bolts are tightened, the gasket may extend past the rear main seal housing. Trim the excess with a sharp knife so the gasket is flush with the cylinder block.

- Apply a thin coat of oil to J 34853.

8. Oil seal to crankshaft using a J 34853 (Figure 82).
9. Two guide pins and oil pump assembly with new gasket and rubber oil pump-to-coolant pump seals to crankshaft using J 34853 (Figures 83 and 84); secure with seven bolts.

Tighten

- Oil pump bolts to 11 N·m (97 lb.in.).

Inspect

- Ensure the oil seal lip is not upturned, then remove the J 34853.
- Edge of oil pump gasket. If it protrudes out into the engine oil pan mating surface, trim with a sharp knife, making edge smooth and flush with mating surface of the engine oil pan (Figure 85).

- Apply gasket paste GM P/N 1050026, or equivalent, to the engine oil pan mating surface in a continuous bead (Figure 76).

10. Oil pump strainer to engine oil pan.
11. Oil pump strainer to cylinder block; secure with two bolts (Figure 77).

Tighten

- Oil pump strainer bolts to 11 N·m (97 lb.in.).

12. Engine oil pan to cylinder block; secure with sixteen bolts and two nuts.

Tighten

- Engine oil pan nuts and bolts to 11 N·m (97 lb.in.).

13. Engine oil pan drain plug and gasket to engine oil pan.

Tighten

- Engine oil drain plug to 35 N·m (26 lb.ft.).

14. New O-ring seal to coolant intake pipe.
15. Coolant intake pipe to cylinder block; secure with one bolt.

Tighten

- Coolant intake pipe bolt to 11 N·m (97 lb.in.).

16. Coolant pump with new gasket to engine; secure with five bolts.

Tighten

- Coolant pump bolts to 12 N·m (106 lb.in.).

17. Rubber seals between coolant pump and oil pump and between coolant pump and cylinder head.
18. Engine oil level indicator tube with new O-ring to cylinder block; secure with mounting bolt. Do not tighten fully.

Tighten

- Engine oil level indicator tube mounting bolt to 11 N·m (97 lb.in.).

19. Timing belt guide and crankshaft timing gear. Install timing belt guide with concave side facing oil pump; secure with crankshaft timing gear bolt.

Tighten

- Crankshaft timing belt gear bolt to 110 N·m (81 lb.ft.).

20. Generator to cylinder block. Do not fully tighten nuts and bolts.
21. Right-side engine mount to engine; secure with three right-side engine mount-to-engine bracket bolts.

Tighten

- Right-side engine mount-to-engine bracket bolts to 55 N·m (40 lb.ft.).

22. Left-side engine mount to engine; secure with three left-side engine mount-to-engine bracket bolts.

Tighten

- Left-side engine mount-to-engine bolts to 55 N·m (40 lb.ft.).

23. Cylinder head gasket to cylinder block.

NOTICE: The cylinder head gasket must be installed only one way. The gasket is marked "TOP" and this mark should face upward toward the crankshaft pulley side.

24. Cylinder head assembly to cylinder block; secure with ten bolts.

Tighten

- Cylinder head bolts in three or four passes following sequence to 73 N·m (54 lb.ft.) (Figure 46).

25. Tensioner plate to tensioner. Insert the tensioner plate lock tab into the tensioner slot (Figure 30).
26. Tensioner with tensioner plate to engine; secure with tensioner retaining bolt. Do not tighten fully.

Important

- Make sure that the tensioner plate and tensioner move in the same direction when the tensioner plate is moved counterclockwise (Figure 31). If there is no associated movement between the tensioner plate and the tensioner, remove the tensioner and tensioner plate and reinsert the tensioner plate lock tab into the tensioner slot, then reinstall.

- Loosen all valve lash adjusting screws and locknuts to prevent damage to valves (Figure 32).
- Rotate the camshaft timing gear clockwise and align the camshaft timing gear timing mark with the "V" timing mark on the timing belt inside cover (Figure 33).
- Rotate the crankshaft clockwise and align the punch mark on the crankshaft timing belt gear with the arrow timing mark on the oil pump. This places the No. 4 cylinder at TDC (Figures 34 and 35).

27. Timing belt to camshaft timing gear and crankshaft pulley.

Important

- When installing timing belt, match the arrow mark on the timing belt to the rotation direction of the crankshaft pulley.
- The timing belt must be installed so that there is no slack on the right side of the timing belt.

28. Tensioner spring to tensioner plate and tensioner spring screw; secure tensioner plate with tensioner washer and tensioner stud. Do not tighten fully.

- Rotate the crankshaft clockwise two complete rotations.

Inspect

- Camshaft and crankshaft timing marks. If either one of these marks is not aligned properly, remove the timing belt and repeat the installation procedure.

Tighten

- Tensioner stud to 11 N·m (97 lb.in.).
- Tensioner bolt to 27 N·m (20 lb.ft.).

29. Timing belt outside cover; secure with eight bolts and one nut.

Tighten

- Timing belt outside cover bolts and nut to 10 N·m (89 lb.in.).

Adjust

- Valve lash. Refer to "Valve Lash" earlier in this section.

30. Cylinder head cover. Refer to "Cylinder Head Cover" earlier in this section.
31. Secondary (spark plug) wires.

CRANKSHAFT

Figures 28, 29, 31 through 35, 74, 77, 81 and 124 through 130

Remove or Disconnect

1. Engine assembly from vehicle. Refer to "Engine Assembly" earlier in this section.
2. Clutch from engine assembly (manual transmission equipped vehicles). Refer to SECTION 7C.
3. Six bolts and flywheel from engine assembly.

- Place a drain pan beneath engine oil pan to catch escaping oil.

4. Engine oil drain plug and gasket, allowing engine oil to drain (Figure 74).
5. Five bolts and crankshaft pulley from crankshaft (Figure 28).

Important

- It is not necessary to remove the crankshaft pulley center bolt when removing the crankshaft pulley.

6. Eight bolts, one nut and timing belt outside cover from engine assembly.

- Loosen tensioner stud and remove tensioner spring from tensioner plate and tensioner spring screw (Figure 29).

7. Sixteen bolts, two nuts and engine oil pan from cylinder block.
8. Two bolts and oil pump strainer from cylinder block.
9. One bolt and crankshaft timing belt gear from crankshaft.
10. Oil level indicator from guide tube.
11. One bolt and guide tube with O-ring from cylinder block.
12. Seven bolts and oil pump assembly, gasket, rubber oil pump-to-coolant pump seals and two guide pins from cylinder block (Figure 81).

- Mark the flywheel-to-engine position.

13. Six flywheel retaining bolts and flywheel from crankshaft.
14. Rear main seal.

Important

- Main bearings, main bearing caps, connecting rod, connecting rod bearings, connecting rod bearing caps, pistons and piston rings are in combination sets. Do not disturb the combinations and check to ensure that each part goes back to where it came from when installing.

15. Ten bolts, bearing cap supports and five main bearing caps with lower half of main bearings.
16. Thrust bearings from crankshaft (Figure 124).

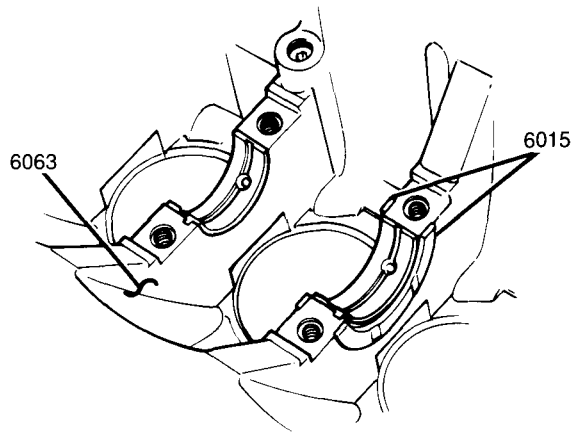

6015 THRUST BEARING
6063 CYLINDER BLOCK PC2204-6A1-EJ-RS

Figure 124 Thrust Bearing

17. Eight nuts and four connecting rod caps with lower half of connecting rod bearings.
18. Crankshaft from cylinder block.

Measure

Tools Required:
J 8001 Dial Indicator Set
J 26900-13 Magnetic Base
J 26900-3 Outside Micrometer

1. Crankshaft runout at center journal using a J 8001 and J 26900-13. Rotate crankshaft slowly. If runout exceeds 0.06 mm (0.0023-inch), replace the crankshaft.

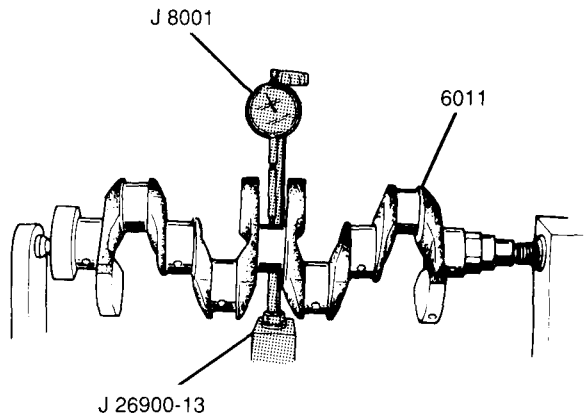

6011 CRANKSHAFT PC2205-6A1-EJ-RS

Figure 125 Measuring Crankshaft Runout

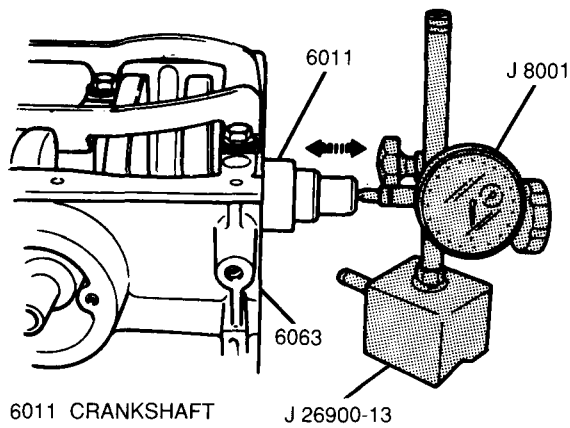

6011 CRANKSHAFT
6063 CYLINDER BLOCK PC2206-6A1-EJ-RS

Figure 126 Measuring Crankshaft Thrust Play

2. Crankshaft thrust play using the J 8001 and J 26900-13 (Figure 126). Crankshaft must be set in cylinder block with thrust bearing and main bearing caps installed. All bearing cap bolts must be tightened to specification prior to measurement.

Tighten

- Bearing cap bolts to 54 N·m (40 lb.ft.).

Standard thrust play is 0.11 to 0.31 mm (0.0044 to 0.0122-inch). If thrust play exceeds 0.38 mm (0.0149-inch), replace thrust bearing with a new standard bearing or a 0.125 (0.0049-inch) oversize thrust bearing to obtain standard thrust play. Standard thrust bearing thickness is 2.500 mm (0.0984-inch). Thrust bearing oversize is 0.125 mm (0.0049-inch) for thrust bearing with a thickness of 2.563 mm (0.1009-inch).

3. Crankshaft journals for out-of-round and taper (uneven wear) using a J 26900-3 (Figure 127). A crankshaft journal is unevenly worn if there is a difference in diameter at a cross section or along its length (or both). If any journal is badly damaged or if amount of uneven wear exceeds 0.01 mm (0.0004-inch), regrind or replace crankshaft.

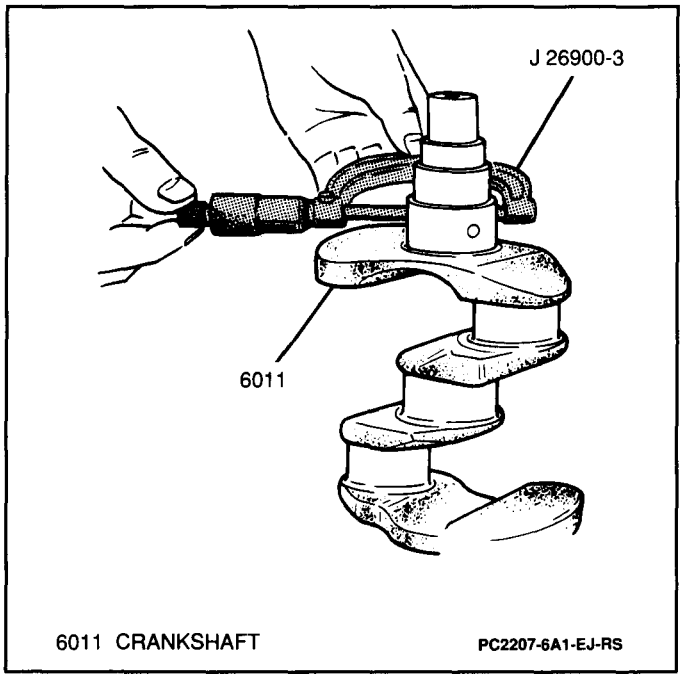

Figure 127 Measuring Crankshaft Journal Uneven Wear

Install or Connect

Tools Required:
J 34853 Crankshaft Oil Seal Guide
J 35271 Flywheel Holder

NOTICE: To prevent damage to cylinder block or parts installed:

- All parts to be installed must be perfectly clean.
- Be sure to apply engine oil to the crankshaft journals, main bearings, thrust bearings, connecting rod bearings, pistons, piston rings and cylinder bores.
- Main bearings, main bearing caps, connecting rod, connecting rod bearings, connecting rod bearing caps, pistons and piston rings are in combination sets. Do not disturb the combinations and check to ensure that each part goes back to where it came from when installing.

1. Main bearings upper half to crankshaft. For selection of correct main bearing, refer to "Main Bearings" earlier in this section.
2. Thrust bearings to cylinder block between No. 2 and No. 3 cylinders. Face the engine oil groove sides to counterweights (Figure 128).

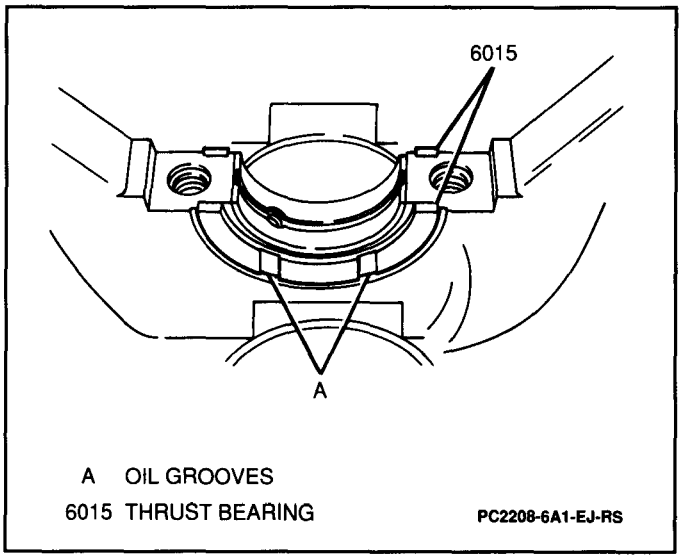

Figure 128 Thrust Bearing Installation

3. Crankshaft to cylinder block.
4. Four connecting rod caps; secure with eight cap nuts.

Tighten

- Connecting rod bearing cap nuts to 35 N·m (26 lb.ft.).

Important

- On each main bearing cap, the arrow mark and number are embossed. When installing each main bearing cap to the cylinder block, point the arrow mark toward the crankshaft pulley side and install each cap from crankshaft pulley end to flywheel end in order "1," "2," "3," "4" and "5."

5. Five main bearing caps and two bearing cap supports; secure with ten main bearing bolts (Figure 129).

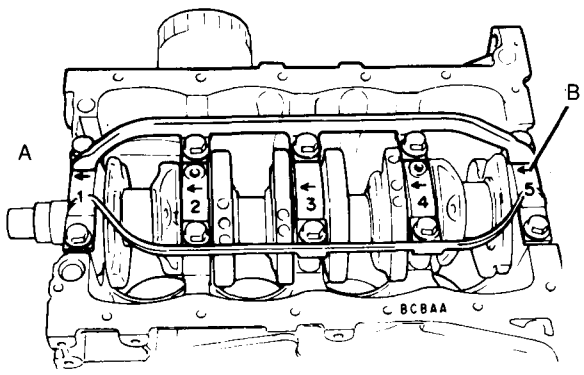

A CRANKSHAFT PULLEY SIDE
B ARROW MARK PC2209-6A1-EJ-RS

Figure 129 Main Bearing Cap Installation

Important

- Gradual and uniform tightening is important for main bearing cap bolts.
- After tightening main bearing bolts, check to be sure that crankshaft rotates smoothly when turned by hand.

Tighten

- Main bearing cap bolts to 54 N·m (40 lb.ft.).

6. Rear main seal housing and new gasket to engine; secure with five rear main seal housing bolts. There are two different bolt lengths. Ensure correct placement.

Tighten

- Rear main seal housing bolts to 12 N·m (106 lb.in.).

Important

- After the rear main seal housing bolts are tightened, the gasket may extend past the rear main seal housing. Trim the excess with a sharp knife so the gasket is flush with the cylinder block (Figure 130).

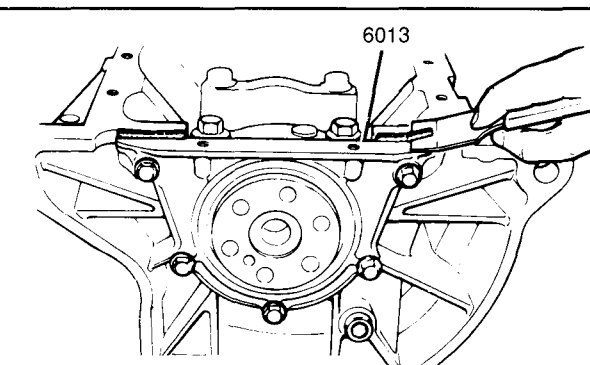

6013 MAIN SEAL HOUSING PC2210-6A1-EJ-RS

Figure 130 Trimming Gasket Edge

7. Oil pump to cylinder block, using a J 34853 to install the oil seal over the crankshaft.

Important

- During oil pump installation, ensure that oil seal lip is not turned out.

- Remove the J 34853.

8. Oil pump mounting bolts to oil pump assembly.

Tighten

- Oil pump mounting bolts to 11 N·m (97 lb.in.).

9. Rubber seals between oil pump and coolant pump.

- Edge of oil pump gasket might bulge out; if it does, cut bulge off with sharp knife, making edge smooth and flush with end faces of pump case and cylinder block.

10. Guide tube with new O-ring to cylinder block. Apply light coat of oil to O-ring prior to installation.
11. Oil level indicator to guide tube.
12. Oil pump strainer and oil pump strainer seal to cylinder block; secure with oil pump strainer bolt first and then oil pump strainer bracket bolt (Figure 77).

Tighten

- Oil pump strainer bolt first and then oil pump strainer bracket bolt to 11 N·m (97 lb.in.).

- Apply gasket paste GM P/N 1050026, or equivalent, to the engine oil pan mating surface in a continuous bead (Figure 76).

13. Engine oil pan to cylinder block; secure with fourteen bolts and two nuts starting at the center and working outward.

Tighten

- Engine oil pan bolts and nuts to 11 N·m (97 lb.in.).

- Remove the cylinder head cover. Refer to "Cylinder Head Cover" earlier in this section.
- Loosen all valve lash adjusting screws and locknuts to prevent damage to valves (Figure 32).

14. Timing belt guide and crankshaft timing belt gear. Install timing belt guide with concave side facing oil pump. Lock crankshaft with a J 35271. Secure with crankshaft timing belt gear bolt.

Tighten

- Crankshaft timing belt gear bolt to 110 N·m (81 lb.ft.).

- Check that the timing mark on camshaft timing gear is aligned with "V" mark on cylinder head cover. If not, align the two marks by turning the camshaft.
- Check that punch mark on crankshaft pulley is aligned with arrow mark on oil pump case. If not, align the two marks by turning crankshaft.

15. Tensioner plate to timing belt tensioner. Insert tensioner plate lug into the timing belt tensioner hole.
16. Tensioner with tensioner plate to engine; secure with tensioner retaining bolt. Do not tighten fully.

Important

- Make sure that the tensioner plate and tensioner move in the same direction when the tensioner plate is moved counterclockwise (Figure 31). If there is no associated movement between the tensioner plate and the tensioner, remove the tensioner and tensioner plate and reinsert the tensioner plate lock tab into the tensioner slot, then reinstall.

- Remove the cylinder head cover. Refer to "Cylinder Head Cover" earlier in this section.
- Loosen all valve lash adjusting screws and locknuts to prevent damage to valves (Figure 32).
- Rotate the camshaft timing gear clockwise and align the camshaft timing gear timing mark with the "V" timing mark on the timing belt inside cover (Figure 33).
- Rotate the crankshaft clockwise and align the punch mark on the crankshaft timing belt gear with the arrow timing mark on the oil pump. This places the No. 4 cylinder at TDC (Figures 34 and 35).

17. Timing belt, tensioner spring and spring damper. With two sets of marks aligned and tensioner plate pushed up, install timing belt on two pulleys in such a way that drive side of belt is free from any slack. Then install the tensioner spring and spring damper. Hand tighten tensioner stud only.

Important

- When installing timing belt, match arrow mark on timing belt with rotating direction of crankshaft.

- To take up slack in timing belt, turn crankshaft two rotations clockwise after installing it. After making sure that belt is free from slack, tighten timing belt tensioner stud first and then tensioner bolt.

Tighten

- Tensioner stud to 11 N·m (97 lb.in.).
- Tensioner bolt to 27 N·m (20 lb.ft.).

- Confirm again that both sets of timing marks are aligned properly.

Important

- Before installing timing belt cover, make sure that seal is between coolant pump and oil pump case.

18. Timing belt cover; secure with eight bolts and one nut.

Tighten

- Timing belt outside cover bolts and nut to 10 N·m (89 lb.in.).

19. Crankshaft pulley; secure with five crankshaft pulley bolts.

Tighten

- Crankshaft pulley bolts to 16 N·m (12 lb.ft.).

Adjust

- Valve lash. Refer to "Valve Lash" earlier in this section

20. Cylinder head cover with new gasket; secure with four nuts.

Tighten

- Cylinder head cover nuts to 5 N·m (44 lb.in.).

21. Engine to vehicle. Refer to "Engine Assembly" earlier in this section.

THREAD REPAIR

Figure 131

Damaged threads may be reconditioned by drilling out, rethreading and installing a suitable thread insert. General purpose thread repair kits are available commercially.

CAUTION: Wear safety glasses to avoid eye damage.

1. Determine size, pitch and depth of damaged thread. If necessary, adjust stop collars on cutting tool and tap to the required depth.

Important

- Refer to the kit manufacturer's instructions regarding the size of drill and tap to be used.

2. Drill out damaged thread (Figure 131A).

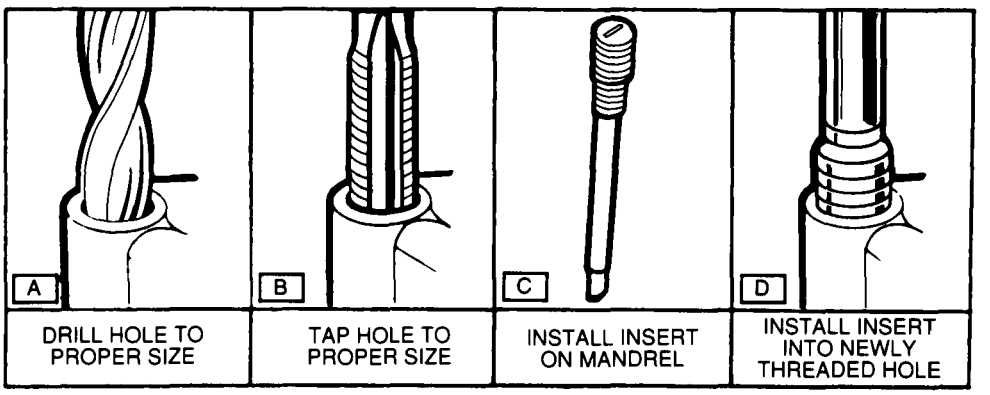

Figure 131 Repairing Threaded Holes

Clean

- Drilling chips out of hole.

3. Tap hole (Figure 131B). Lubricate tap with light engine oil (except when tapping into aluminum).

Important

- Avoid a buildup of chips. Back out the tap every few turns and remove chips.

4. Thread the insert onto the mandrel of the installer (Figure 131C). Engage the tang of the insert onto the end of the mandrel.
5. Lubricate the insert with light engine oil (except when installing into aluminum) and install the insert (Figure 131D).

Important

- When correctly installed, the insert should be flush to one turn below the surface.

6. If the tang of the insert does not break off when backing out the installer, break the tang off with a drift punch.

SPECIFICATIONS

FASTENER TIGHTENING SPECIFICATIONS

Adjusting Screw Locknut	17 N·m (13 lb.ft.)
Air Cleaner (ACL) Mounting Bolts	10 N·m (89 lb.in.)
Air Conditioner (A/C) Compressor Flexible Hose Mounting Bolts	10 N·m (89 lb.in.)
Air Intake Case Retainer Nuts	10 N·m (89 lb.in.)
Air Intake Support Brace Bolts	15 N·m (11 lb.ft.)
Bearing Cap Bolts	54 N·m (40 lb.ft.)
Camshaft Timing Gear Bolt	60 N·m (44 lb.ft.)
Coolant Pump Pulley Nuts	24 N·m (18 lb.ft.)
Crankshaft Pulley Bolts	16 N·m (12 lb.ft.)
Crankshaft Timing Belt Gear Bolt	110 N·m (81 lb.ft.)
Cylinder Head Bolts	73 N·m (54 lb.ft.)
Cylinder Head Cover Nuts	5 N·m (44 lb.in.)
Distributor Gear Case Bolts	10 N·m (89 lb.in.)
Engine Mount-to-Frame Bracket Bolts	55 N·m (40 lb.ft.)
Engine Mount-to-Engine Bracket Bolts	55 N·m (40 lb.ft.)
Engine Mount-to-Exhaust Bracket Bolts	55 N·m (40 lb.ft.)
Engine Oil Drain Plug	35 N·m (26 lb.ft.)
Engine Oil Pan Bolts and Nuts	11 N·m (97 lb.in.)
Exhaust Manifold Bolts and Nuts	23 N·m (17 lb.ft.)
Exhaust Manifold Cover Bolts and Nuts	11 N·m (97 lb.in.)
Exhaust Bracket-to-Exhaust Manifold Nut	50 N·m (37 lb.ft.)
Exhaust Manifold-to-Cylinder Head Bolts and Nuts	23 N·m (17 lb.ft.)
Exhaust Manifold-to-Front Pipe/Three Way Catalytic Converter (TWC) Assembly Bolts	50 N·m (37 lb.ft.)
Exhaust Pipe-to-Bracket Nut	50 N·m (37 lb.ft.)
Fan Clutch Nuts	11 N·m (97 lb.in.)

Flywheel Retaining Bolts	78 N·m (58 lb.ft.)
Front Pipe/TWC Assembly-to-Exhaust Manifold Bolts	50 N·m (37 lb.ft.)
Front Pipe/TWC Assembly-to-Resonator/Center Pipe Nuts	35 N·m (26 lb.ft.)
Front Skid Plate Bolts	55 N·m (40 lb.ft.)
Generator Mounting Bolts and Nuts	23 N·m (17 lb.ft.)
Guide Tube Bolt	14 N·m (124 lb.in.)
Intake Manifold Mounting Bolts and Nuts	23 N·m (17 lb.ft.)
Intake Manifold Support Bolts	23 N·m (17 lb.ft.)
Main Bearing Cap Bolts	54 N·m (40 lb.ft.)
Negative (-) Battery Cable-to-Negative (-) Battery Terminal Retainer	15 N·m (11 lb.ft.)
Oil Pressure Switch	14 N·m (124 lb.ft.)
Oil Pump Bolts	11 N·m (97 lb.in.)
Oil Pump Strainer Bolt	11 N·m (97 lb.in.)
Oil Pump Strainer Bracket Bolt	11 N·m (97 lb.in.)
Positive (+) Battery Cable-to-Positive (+) Battery Terminal Retainer	15 N·m (11 lb.ft.)
Shroud Bolts	11 N·m (97 lb.in.)
Rear Main Seal Housing Bolts	12 N·m (106 lb.in.)
Rocker Arm Shaft Screws	11 N·m (97 lb.in.)
Connecting Rod Bearing Cap Nuts	35 N·m (26 lb.ft.)
Timing Belt Outside Cover Nut and Bolts	10 N·m (89 lb.in.)
Tensioner Bolt	27 N·m (20 lb.ft.)
Tensioner Stud	11 N·m (97 lb.in.)
Torque Converter Bolts	55 N·m (40 lb.ft.)

ENGINE SPECIFICATIONS

Camshaft

Camshaft Lobe Height	
Intake	37.536-37.400 mm (1.4763-1.4724 in.)
Exhaust	37.501-37.400 mm (1.4749-1.4724 in.)
Camshaft Runout (Maximum)	0.10 mm (0.0039 in.)
Camshaft Journal-to-Journal Bore Clearance	0.050-0.091 mm (0.0020-0.0036 in.)

Connecting Rods and Bearings

Connecting Rod Side Clearance	
Standard	0.10-0.20 mm (0.0039-0.0078 in.)
Maximum Limit	0.35 mm (0.0137 in.)
Connecting Rod Bow Limit	0.050 mm (0.0020 in.)
Connecting Rod Twist Limit	0.10 mm (0.0039 in.)
Crankshaft Diameter	
Out-of-Round and Taper Limit	0.01 mm (0.0004 in.)
Standard	43.982-44.000 mm (1.7316-1.7323 in.)
0.25 mm (0.0098 in.) Undersize	43.732-43.750 mm (1.7217-1.7224 in.)
Connecting Rod Bore Inside Diameter	19.003-19.011 mm (0.7481-0.7485 in.)
Connecting Rod Bearing Clearance	
Standard	0.020-0.050 mm (0.0008-0.0019 in.)
Limit	0.080 mm (0.0031 in.)

Crankshaft

Crankshaft Journal Taper or Out-of-Round	0.01 mm (0.0004 in.)
Crankshaft Runout at Center Journal	0.06 mm (0.0023 in.)
Crankshaft Thrust Play	
Standard	0.11-0.31 mm (0.0044-0.0122 in.)
Maximum	0.38 mm (0.0149 in.)
Thrust Bearing Thickness	
Standard	2.5000 mm (0.0984 in.)
0.125 mm (0.0049 in.) Oversize	2.5630 mm (0.1009 in.)

Cylinder Head

Cylinder Head Gasket Surface Distortion (Maximum)	0.05 mm (0.002 in.)
Cylinder Head Seating Distortion Intake and Exhaust Manifolds (Maximum)	0.10 mm (0.004 in.)

Cylinder Block

Cylinder Bore Limit	75.15 mm (2.9586 in.)
Gasket Surface Distortion Specification	0.03 mm (0.0012 in.)

Gasket Surface Distortion Limit ..... 0.06 mm (0.0024 in.)
Taper and Out-of-Round Limits ..... 0.10 mm (0.0039 in.)

Flywheel

Flywheel Face Runout ..... 0.20 mm (0.0078 in.)

Main Bearings

Main Bearing Clearance
- Standard ..... 0.020-0.040 mm (0.0008-0.0016 in.)
- Undersize ..... 0.020-0.040 mm (0.0008-0.0016 in.)
- Limit ..... 0.060 mm (0.0023 in.)

Standard Main Bearing Thickness
- Green ..... 1.996-2.000 mm (0.0786-0.0787 in.)
- Black ..... 1.999-2.003 mm (0.0787-0.0788 in.)
- Colorless ..... 2.002-2.006 mm (0.0788-0.0789 in.)
- Yellow ..... 2.005-2.009 mm (0.0789-0.0790 in.)
- Blue ..... 2.008-2.012 mm (0.0790-0.0791 in.)

0.25 mm (0.0098 in.) Undersized Bearings
- Green & Red ..... 2.121-2.125 mm (0.0835-0.0836 in.)
- Black & Red ..... 2.124-2.128 mm (0.0836-0.0838 in.)
- Red ..... 2.127-2.131 mm (0.0837-0.0839 in.)
- Yellow & Red ..... 2.130-2.134 mm (0.0839-0.0840 in.)
- Blue & Red ..... 2.133-2.137 mm (0.0840-0.0841 in.)

Crankshaft Journal Diameter
- "1" Stamping ..... 51.994-52.000 mm (2.0470-2.0472 in.)
- "2" Stamping ..... 51.988-51.994 mm (2.0468-2.0470 in.)
- "3" Stamping ..... 51.982-51.988 mm (2.0465-2.0468 in.)
- (Undersized) ..... 51.732-51.750 mm (2.0367-2.0373 in.)

Main Bearing Cap Bore Diameter (Without Bearing)
- "A" Stamping ..... 56.000-56.006 mm (2.2047-2.2050 in.)
- "B" Stamping ..... 56.006-56.012 mm (2.2050-2.2052 in.)
- "C" Stamping ..... 56.012-56.018 mm (2.2052-2.2054 in.)

Oil Pump

Oil Pump Pressure Relief ..... 4.0 kg/cm (56.9 psi)
Oil Pump Outer Rotor-to-Oil Pump Body Radial Clearance (Maximum) ..... 0.310 mm (0.0122 in.)
Oil Pump Housing-to-Oil Pump Gear Set (Side Clearance) (Maximum) ..... 0.15 mm (0.0059 in.)

Pistons

Piston Pin Clearance
- Standard ..... 0.003-0.016 (0.0001-0.0006 in.)
- Maximum ..... 0.05 mm (0.002 in.)

Piston Pin Diameter ..... 18.995-19.000 mm (0.7478-0.7480 in.)
Piston Pin Offset ..... 0.5 mm (0.02 in.)
Piston-to-Cylinder Bore Clearance ..... 0.03 mm (0.0018 in.)

Piston Diameter
- Standard ..... 74.970-74.990 mm (2.9516-2.9524 in.)
- 0.25 mm (0.0098 in.) Oversize Piston ..... 75.220-75.230 mm (2.9614-2.9618 in.)
- 0.50 mm (0.0197 in.) Oversize Piston ..... 75.470-75.480 mm (2.9713-2.9716 in.)

Piston Ring End Gap
- Top Ring (Standard) ..... 0.20-0.35 mm (0.0079-0.0137 in.)
- Top Ring (Maximum Limit) ..... 0.7 mm (0.0276 in.)
- Lower Ring (Standard) ..... 0.20-0.35 mm (0.0079-0.0137 in.)
- Lower Ring (Maximum Limit) ..... 0.7 mm (0.0276 in.)
- Oil Ring (Standard) ..... 0.2-0.7 mm (0.0079-0.0275 in.)
- Oil Ring (Maximum Limit) ..... 1.8 mm (0.0708 in.)

Piston Ring Groove Clearance
- Upper Compression Ring ..... 0.03-0.07 mm (0.0012-0.0027 in.)
- Lower Compression Ring ..... 0.02-0.06 mm (0.0008-0.0023 in.)

Rocker Arms

Rocker Arm Clearance
- Standard ..... 0.012-0.045 mm (0.0005-0.0017 in.)

Rocker Arm Inside Diameter ..... 16.000-16.018 mm (0.629-0.630 in.)
Rocker Arm Shaft Runout Limit ..... 0.12 mm (0.004 in.)
Rocker Arm Shaft Diameter ..... 15.973-15.988 mm (0.628-0.629 in.)

Valves

Valve Guide Inside Diameter	7.000-7.015 mm (0.2756-0.2761 in.)
Valve Head Thickness	
Intake Valves (Standard)	1.0 mm (0.039 in.)
Intake Valves (Minimum Limit)	0.6 mm (0.023 in.)
Exhaust Valves (Standard)	1.0 mm (0.039 in.)
Exhaust Valves (Minimum Limit)	0.7 mm (0.027 in.)
Valve Head Angles for Refinishing	
Area Above Seat Contact Surface	15 degrees
Area Below Seat Contact Surface	60 degrees
Seat Contact Surface	45 degrees
Valve Seating Contact Width	
Intake and Exhaust	1.30-1.50 mm (0.0512-0.0590 in.)
Valve Stem Outside Diameter	
Intake Valves	6.965-6.980 mm (0.2742-0.2748 in.)
Exhaust Valves	6.950-6.965 mm (0.2737-0.2742 in.)
Valve Stem Radial Runout (Minimum)	
Intake and Exhaust	0.08 mm (0.003 in.)
Valve Stem-to-Valve Guide Clearance	
Intake Valves (Standard)	0.020-0.050 mm (0.0008-0.0019 in.)
Intake Valves (Maximum Limit)	0.070 mm (0.0027 in.)
Exhaust Valves (Standard)	0.035-0.065 mm (0.0014-0.0025 in.)
Exhaust Valves (Maximum Limit)	0.090 mm (0.0035 in.)
Valve Spring Free Length	
Standard	50.46 mm (1.9866 in.)
Minimum Limit	48.50 mm (1.9094 in.)
Valve Spring Preload	
Standard	22.8-29.2 kg at 41.5 mm (50.2-64.3 lbs. at 1.63 in.)
Valve Spring Side Clearance (Maximum)	2.0 mm (0.079 in.)

Valve Lash

Cold Adjustment Coolant Temperature	25°C (77°F)
Hot Adjustment Coolant Temperature	68°C (154°F)
Intake Valve Cold Valve Lash	0.13-0.17 mm (0.0051-0.0067 in.)
Exhaust Valve Cold Valve Lash	0.15-0.19 mm (0.0063-0.0075 in.)
Intake Valve Hot Valve Lash	0.23-0.27 mm (0.0090-0.0110 in.)
Exhaust Valve Hot Valve Lash	0.25-0.29 mm (0.0102-0.0114 in.)

SERVICE PARTS INFORMATION

Component Name Used in Section 6A1	Reference Name in Service Parts Catalog	Group Number
Air Cleaner Element	Element, Air Cleaner	3.410
Air Cleaner Hose	Hose, Air Cleaner Inlet	3.417
Air Cleaner Pipe	Duct, Air Cleaner	3.417
Air Cleaner Upper Case	Cleaner, Air	3.402
Air Intake Case	Case, Engine Air Intake	3.403
Air Intake Case Cover	Cover, Air Intake Case	3.403
Bearing Cap Supports	Stiffener, Engine Crankshaft Bearing Cap	0.153
Camshaft	Camshaft	0.519
Camshaft Timing Gear	Sprocket, Timing	0.736
Camshaft Gear Pin	Pin, Dowel	8.939
Connecting Rod	Rod, Connector	0.603
Connecting Rod Bearing	Bearing, Connecting Rod	0.616
Crankshaft Pulley	Pulley, Crankshaft	0.659
Crankshaft Timing Belt Gear	Sprocket, Crankshaft Timing Belt	0.728
Crankshaft	Crankshaft, Engine	0.646
Cylinder Block	Block, Engine	0.033
Cylinder Head	Head, Cylinder	0.269
Cylinder Head Cover	Cover, Camshaft	0.386
Cylinder Head Cover Gasket	Gasket, Cylinder Head Cover	0.423
Cylinder Head Gasket	Gasket, Cylinder Head	0.289
Distributor Gear Case	Case, Engine Distributor	2.363
Engine Oil Pan	Pan, Oil	1.426
Engine Oil Drain Plug Gasket	Gasket, Oil Drain Plug	1.456

Engine Oil Drain Plug	Plug, Oil Pan Drain	1.453
Exhaust Manifold	Manifold, Exhaust	3.601
Exhaust Manifold Gasket	Gasket, Exhaust Manifold	3.270
Exhaust Valve	Valve, Exhaust	0.297
Inner Rotor	Gear, Oil Pump Inner	1.639
Inside Cover	Cover, Timing Belt Inner	0.206
Inside Cover Seal	Seal, Timing Cover Inner	0.207
Intake Manifold	Manifold, Intake	3.265
Intake Manifold Gasket	Gasket, Intake Manifold	3.270
Intake Manifold Inlet Hose	Hose, Intake Manifold Inlet	3.276
Intake Valve	Valve, Intake	0.296
Lower Case	Cleaner, Air	3.402
Lower Ring	Ring Kit	0.643
Oil Level Indicator Guide Tube	Tube, Oil Level Indicator...	1.516
Oil Level Indicator Guide Tube Seal	Seal, Oil Level Indicator Tube	1.516
Oil Pump	Pump Kit, Engine Oil	1.652
Oil Pump Gasket	Gasket, Oil Pump	1.655
Oil Pump Pin	Pin, Oil Pump	8.939
Oil Pump Strainer	Screen, Oil Pump	1.656
Oil Pump Strainer Seal	Seal, Oil Pump Strainer	1.531
Oil Ring	Ring Kit	0.643
Oil Seal	Seal, Camshaft	0.213
Outer Rotor	Gear, Oil Pump Outer	1.639
Piston	Piston, w/Pin	0.629
Rear Engine Mount	Mounting, Engine Rear	0.027
Rear Mounting Bracket (Lower - Automatic Transmission Vehicles)	Bracket, Engine Mount, Rear Automatic Transmission	0.029
Rear Mounting Bracket (Lower - Manual Transmission Vehicles)	Bracket, Engine Rear Engine Mount	0.029
Rear Mounting Bracket (Upper)	Bracket, Engine Rear Engine Mount	0.029
Rear Oil Seal	Seal, Rear Oil	0.137
Relief Valve	Valve, Oil Pump Relief	1.609
Retainer	Retainer, Relief Valve Spring	1.609
Retainer Ring	Circlip	8.934
Right Engine Mount	Mount, Engine Rear RH	0.027
Right Mounting Bracket	Bracket, Engine Mount RH	0.029
Rotor Plate	Cover, Oil Pump	1.723
Rotor Plate Pin	Pin, Oil Pump Cover	1.723
Seal	Seal, Water Pump	1.123
Seal Washers	Washer, Camshaft Cover	0.413
Secondary (Spark Plug) Wire Clamps	Retainer, Ignition Coil Wire	2.251
Spring	Spring, Oil Relief Valve	1.609
Tensioner Plate	Plate, Tensioner	0.724
Tensioner Spring	Spring, Tensioner	0.724
Throttle Body Fuel Injection (TBI) Unit	Body, Throttle	3.725
Throttle Body Gasket	Gasket, Throttle Body	3.336
Throttle Body Outlet Hose	Hose, Throttle Body	3.337
Throttle Body Inlet Hose	Hose, Throttle Body	3.337
Thrust Bearing	Bearing, Crankshaft (Thrust)	0.096
Timing Belt	Belt, Timing	0.724
Timing Belt Cover	Cover, Timing Belt Outer	0.206
Timing Belt Guide	Spacer, Crank Shaft Pulley	0.662
Timing Belt Seal	Seal, Timing Cover Outer	0.207
Timing Belt Tensioner	Tensioner, Timing Belt	0.724
Torque Rod Bracket	Brace, Engine Mounting Bracket	0.029
Torque Rod	Bracket, Engine Rear Torque Rod	0.029
Upper Compression Ring	Ring Kit	0.643
Valve Keepers	Key, Valve Stem	0.310
Valve Spring	Spring, Valve	0.303
Valve Spring Retainer	Seat, Valve Spring (Upper)	0.309
Valve Spring Seat	Seat, Valve Spring	0.309
Valve Stem Seal	Seal, Valve Stem	0.308

SPECIAL TOOLS

1
J 3936-03

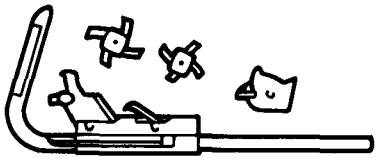

2
J 34853

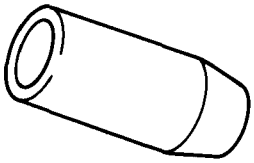

3
J 8037

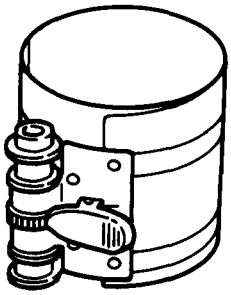

4
J 34833

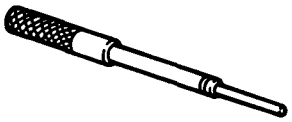

5
J 34831

6
J 34832

7
J 8062

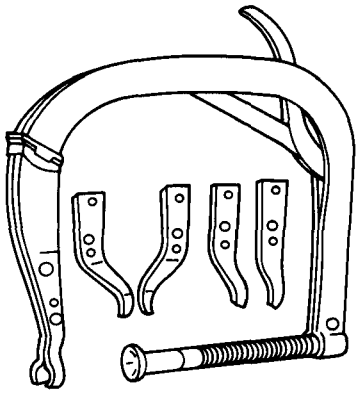

8
J 37979

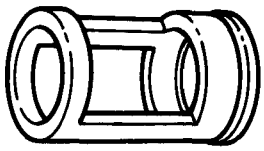

1 PISTON RING GROOVE CLEANER
2 CRANKSHAFT OIL SEAL GUIDE
3 PISTON RING COMPRESSOR
4 VALVE GUIDE REMOVER
5 REAMER
6 REAMER
7 VALVE SPRING COMPRESSOR
8 VALVE SPRING COMPRESSOR ADAPTOR

PC2211-6A1-EJ-RS

9

J 26900-1
J 26900-2
J 26900-3

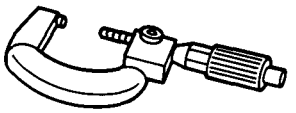

11

J 22738-2

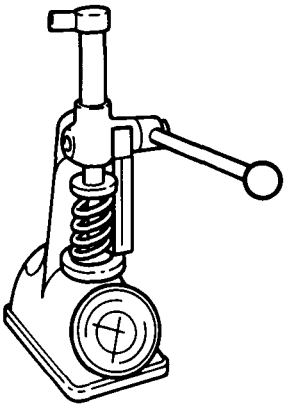

10

J 8037

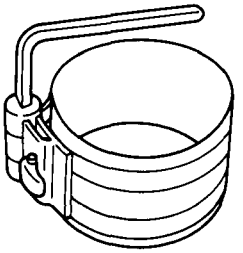

12

J 26900-13

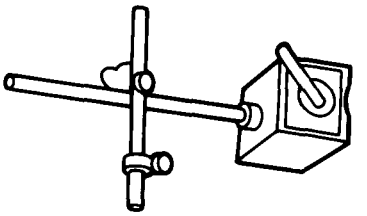

13

J 8001

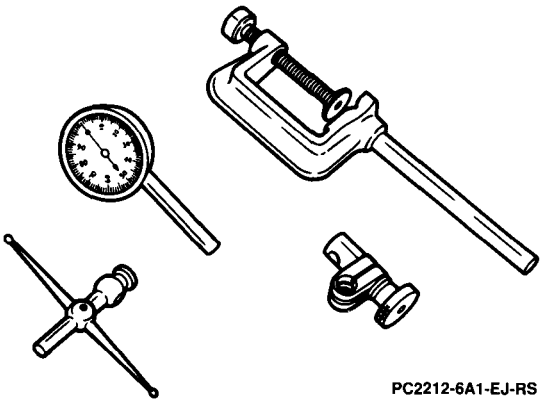

9 OUTSIDE MICROMETER
10 PISTON RING COMPRESSOR
11 VALVE SPRING TESTER
12 MAGNETIC BASE
13 DIAL INDICATOR SET

PC2212-6A1-EJ-RS

14

J 26900-5

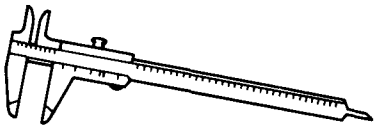

16

J 34834

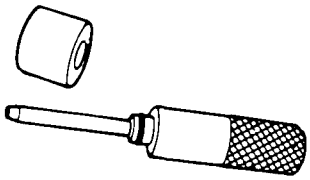

15

J 26900-14

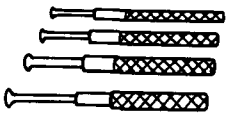

17

J 36854

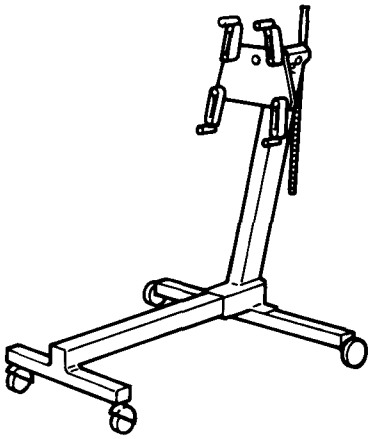

18

J 35271

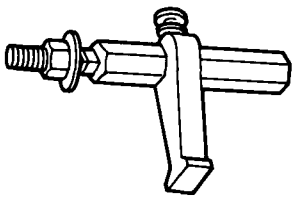

14 VERNIER CALIPER
15 SMALL HOLE GAGES
16 VALVE GUIDE INSTALLER
17 HEAVY DUTY AUTOMOTIVE ENGINE STAND
18 FLYWHEEL HOLDER

PC2213-6A1-EJ-RS

SECTION 6B

COOLING AND RADIATOR

NOTICE: When fasteners are removed, always reinstall them at the same location from which they were removed. If a fastener needs to be replaced, use the correct part number fastener for that application. If the correct part number fastener is not available, a fastener of equal size and strength (or stronger) may be used. Fasteners that are not reused, and those requiring thread-locking compound, will be called out. The correct torque values must be used when installing fasteners that require them. If the above procedures are not followed, parts or system damage could result.

CONTENTS

General Description 6B-1
Radiator 6B-2
Core 6B-2
Tanks 6B-2
Drain Cock 6B-2
Heater Core 6B-2
Radiator Cap 6B-2
Coolant Reservoir 6B-3
Fan Clutch 6B-3
Engine Coolant Temperature (ECT) Sensor .. 6B-3
A/C Engine Coolant Temperature (ECT) Switch 6B-3
Thermostat 6B-3
Coolant Pump 6B-4
Cylinder Block Plug 6B-4
Maintenance Recommendations 6B-4
Checking Engine Coolant Level (ECL) 6B-4
Coolant Concentration Testers 6B-4
Testing Coolant Concentration 6B-4
Hoses and Clamps Inspection 6B-6
Cleaning 6B-6
Diagnosis 6B-6
Thermostat Test 6B-6
Radiator Cap 6B-7
Cooling System Diagnostic Charts 6B-7
On-Vehicle Service 6B-9
Draining and Refilling the Cooling System ... 6B-9
Cooling System Flushing 6B-11
Thermostat 6B-11
Generator/Coolant Pump Drive Belt 6B-12
Coolant Pump 6B-13
Coolant Reservoir 6B-14
Radiator 6B-14
Coolant Hoses and Pipes 6B-16
Cooling Fan and Fan Clutch 6B-19
Specifications 6B-22
Fastener Torques 6B-22
General Specifications 6B-22
Service Parts Information 6B-22
Special Tools 6B-23

GENERAL DESCRIPTION

The engine cooling system consists of the radiator, radiator cap, coolant reservoir, coolant pipes/hoses, coolant pump, cooling fan, and thermostat (Figure 1). The radiator in this vehicle is a tube and fin type.

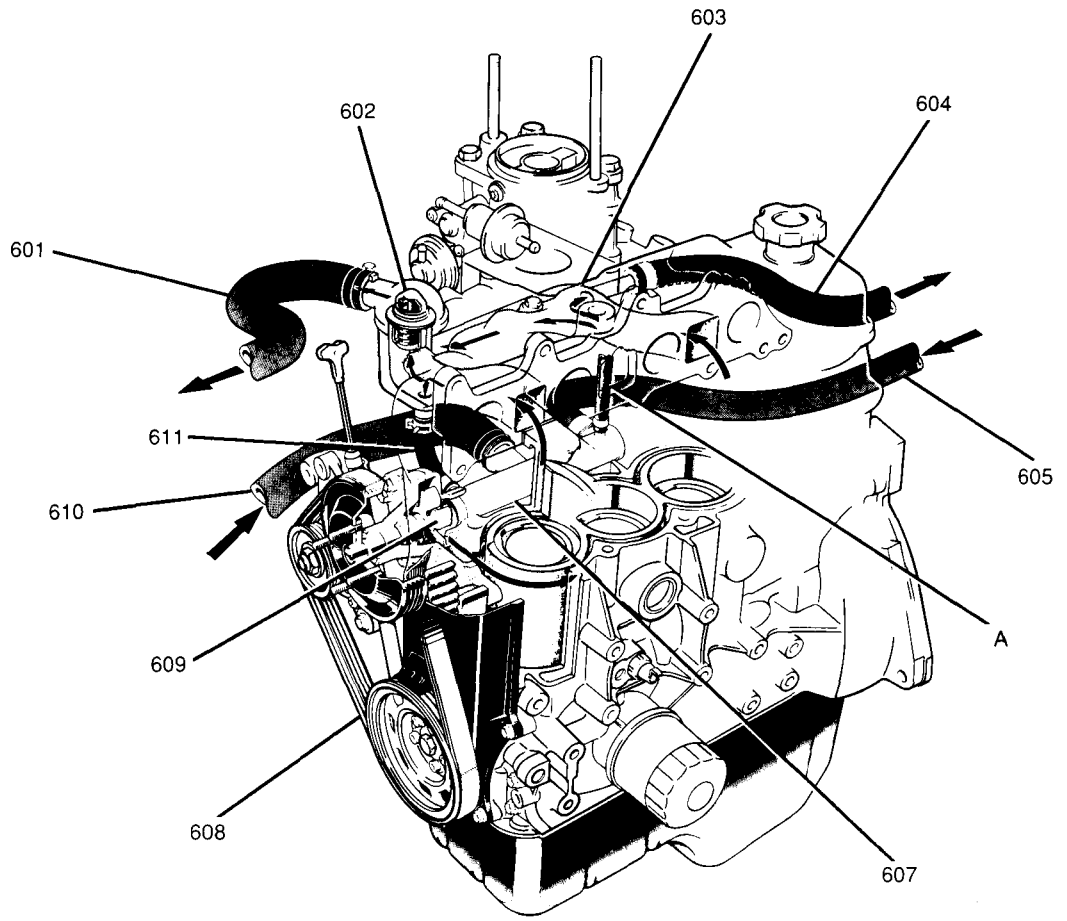

A FROM THROTTLE BODY FUEL INJECTION (TBI) UNIT
601 RADIATOR INLET HOSE
602 THERMOSTAT
603 INTAKE MANIFOLD
604 HEATER INLET HOSE
605 HEATER OUTLET HOSE
607 COOLANT INTAKE PIPE
608 GENERATOR/COOLANT PUMP DRIVE BELT
609 COOLANT PUMP
610 RADIATOR OUTLET HOSE #2
611 BYPASS HOSE

PC4201-6B-EJ-RS

Figure 1 Cooling System

RADIATOR

Core

A lightweight tube and fin aluminum radiator is used in this vehicle. The air circulating between the tubes is directed by the fins to lower the engine coolant temperature (ECT) as it flows through the tubes.

Tanks

The radiator has upper and lower tanks. The upper tank is utilized to increase the capacity and ensure sufficient supply of coolant in the radiator to cool the engine as necessary. Transmission fluid cooler pipes run through the bottom tank of the radiator to cool the transmission fluid (automatic transmission equipped vehicles).

Drain Cock

The drain cock is located at the lower left of the radiator on the rear side. It is an open/close system which allows drainage of the engine coolant from the radiator.

Heater Core

The heater core is located inside the heater case in the passenger compartment. Engine coolant flows through the heater core, heating the air directed over the core, to provide warmed air flow to the vehicle's passenger compartment.

RADIATOR CAP

Figure 2

A pressure vent cap is used on the radiator. The cap contains both a pressure relief valve and vacuum relief valve. The pressure valve is secured against its seat by a spring of predetermined strength that protects the cooling system by relieving the pressure when it rises above 90 kPa (13 psi). The vacuum valve is secured against its seat by a light spring which allows opening of the valve to relieve vacuum created in the cooling system. A see-through coolant reservoir is connected to the radiator by a rubber hose. The pressure/vacuum valve radiator cap allows two-way travel of coolant between the radiator and coolant reservoir (Figure 2).

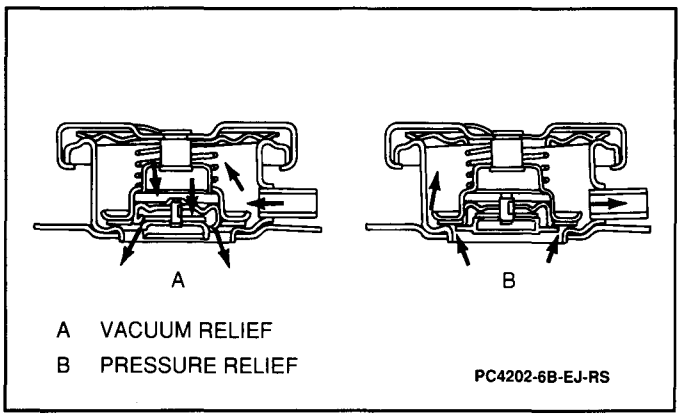

Figure 2 Pressure Vent Radiator Cap

COOLANT RESERVOIR

When the coolant expands (when system temperature rises) the pressure valve in the radiator cap will open and coolant will flow to the reservoir. As the system temperature drops, a vacuum is created in the radiator. This opens the vacuum valve in the cap and pulls coolant from the reservoir back to the radiator. This system maintains a constant engine coolant level (ECL) in the radiator for cooling the engine.

ECL should be maintained between "FULL" and "LOW" marks on the coolant reservoir. Coolant should be added only through the coolant reservoir, never directly to the radiator.

FAN CLUTCH

The cooling fan is connected to the coolant pump shaft by a fan clutch. The fan clutch regulates the speed of the cooling fan revolutions based on the air temperature at the clutch and provides slippage of the fan when cooling is not needed.

When the engine is at idle, regardless of the air temperature at the front of the clutch, the fan will rotate at the same speed as the coolant pump shaft.

When the air temperature at the front of the clutch approaches 55°C (131°F) and the engine speed increases gradually, the clutch slippage increases. Even when revolution speed of the water pump shaft increases, the revolutions of the cooling fan will not noticeably increase.

When the air temperature at the fan clutch exceeds 55°C (131°F) and the revolution speed of the coolant pump shaft exceeds 4,000 rpm, the cooling fan speed becomes constant at 3,100 rpm independent of the coolant pump shaft.

ENGINE COOLANT TEMPERATURE (ECT) SENSOR

An ECT sensor is located in the intake manifold. This sensor operates the ECT gage in the instrument cluster.

A/C ENGINE COOLANT TEMPERATURE (ECT) SWITCH

The A/C ECT switch informs the A/C amplifier of current engine coolant temperature. It is located on the intake manifold near the throttle body fuel injection (TBI) unit.

THERMOSTAT

Figures 3 and 4

A wax pellet-type thermostat is used to control the flow of coolant through the cooling system (Figure 3). Mounted in the thermostat housing in the front of the intake manifold, the thermostat stops the flow of coolant from the engine to the radiator to provide faster warm-ups and to regulate coolant temperature.

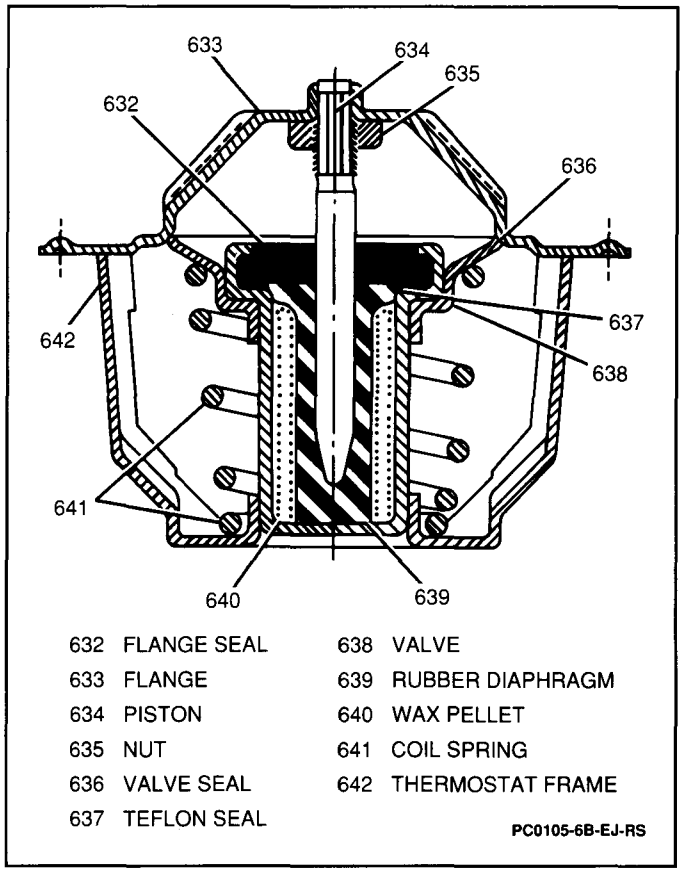

Figure 3 Typical Wax Pellet Thermostat — Sectional View

The wax pellet is hermetically sealed in a metal case. The wax element expands when heated and contracts when cooled. As the vehicle is driven and the engine warms up, the coolant temperature increases. When the coolant reaches a specified temperature, the wax pellet element expands and exerts pressure against a metal case, forcing the valve open. This allows coolant to flow through the system and cool the engine. As the pellet cools, the contraction allows a spring to close the valve.

The thermostat used in this vehicle is calibrated to begin opening at 82°C (179°F) and be fully open (more than 8 mm [0.31-inch] valve lift) at 95°C (203°F).

An air bleed valve is provided in the top portion of the thermostat to vent any gas or air which may have penetrated the cooling system (Figure 4).

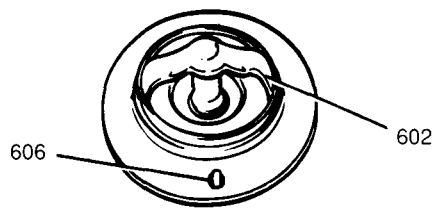

602 THERMOSTAT
606 AIR BLEED VALVE
PC4203-6B-EJ-RS

Figure 4 Thermostat

COOLANT PUMP

A centrifugal-type coolant pump is used in the cooling system. It is driven by a drive belt shared with the generator. The pump impeller is supported by a totally sealed bearing. This pump is serviced as a complete unit and disassembly is not required.

CYLINDER BLOCK PLUG

The cylinder block is equipped with one pressure fitted cylinder block plug for protection in extremely cold weather. If the coolant freezes inside the cylinder block, the expanding ice should drive out the cylinder block plug rather than cracking the block.

MAINTENANCE RECOMMENDATIONS

CAUTION: To avoid the danger of being burned, do not remove the coolant reservoir cap when the coolant is boiling, and do not remove the radiator cap when the engine and radiator are still hot. Scalding coolant and steam can be blown out under pressure if radiator cap or reservoir cap is taken off when system is hot.

For maintenance recommendations and system capacities other than listed below, refer to SECTION 0B.

At least once per year, the front face of the radiator should be cleaned. In northern climates, spring is a good time of year to do this cleaning, as road salt residue on the radiator can cause corrosion. Insects, leaves and other debris can be removed by blowing compressed air through the radiator core from the back. Water can be used on both sides of the radiator.

NOTICE: Never spray cold water on a hot radiator.

NOTICE: The radiator fins are necessary for good heat transfer and should not be brushed to prevent damage to the fins.

CHECKING ENGINE COOLANT LEVEL (ECL)

Visually check the ECL at the see-through coolant reservoir, located on the right side of the engine compartment. ECL should be near the "LOW" mark on the reservoir when the engine is cold. The ECL should increase somewhat as the vehicle is running. With the engine at normal running temperature, ECL should be between the "LOW" and "FULL" marks.

Should the ECL prove to be low, refill the cooling system through the coolant recovery reservoir with a mixture of 50% water and 50% ethylene glycol antifreeze meeting GM specification #1825-M.

NOTICE: To avoid possible damage to the cooling system, alcohol or methanol-based coolants or pure water should not be used at any time.

COOLANT CONCENTRATION TESTERS

A hydrometer test will indicate whether ethylene glycol and/or water should be added to maintain the desired freezing point of the solution. The freezing point of the solution should give protection to an acceptable temperature of -36°C (-33°F), regardless of climatic conditions. This is also necessary to provide adequate corrosion protection.

Some devices used for testing solutions will indicate the correct freezing point only when tested at a specific temperature. Other testers provide thermometers and tables indicating freezing points corresponding to readings made at various temperatures. Disregarding the temperature of the solution when testing may cause an error as large as 15°C (30°F) in determining freezing points.

Use of a refractometer is recommended, especially if the type of coolant is unknown. A J 26568 or J 23688 Coolant Tester (Centigrade and Fahrenheit scale, respectively) can be used to check the antifreeze protection of the coolant. Make sure the refractometer markings are correct. Unless the J 26568 or J 23688 has a provision for temperature correction, test at the temperature for which the tester was calibrated. If the coolant is warmer or cooler, the reading may be incorrect. Follow the manufacturer's directions when using a J 26568 or J 23688.

TESTING COOLANT CONCENTRATION

Due to a worldwide shortage of ethylene glycol in 1988, some coolant manufacturers have started to mix other types of glycol in the coolant formulations; propylene glycol is the most common new ingredient. A hydrometer will not always provide a correct measurement of freeze protection when anything other than ethylene glycol and water is being tested. The degree of inaccuracy will vary depending on the proportion of other glycols present in the coolant.

All 1993 GM vehicles are produced with coolant that can be accurately measured with a hydrometer; however, when the type and quality of coolant being measured is unknown, such as in a customer vehicle that has accumulated mileage, use of a refractometer is recommended.

Testing Coolant

Figures 5 through 7

Tools Required:
J 26568 Coolant Tester (Centigrade Scale) or
J 23688 Coolant Tester (Fahrenheit Scale)

Clean

- Before each use, swing the plastic cover at the slanted end of a J 26568 or J 23688, exposing the measuring window and the bottom of the plastic cover (Figure 5).

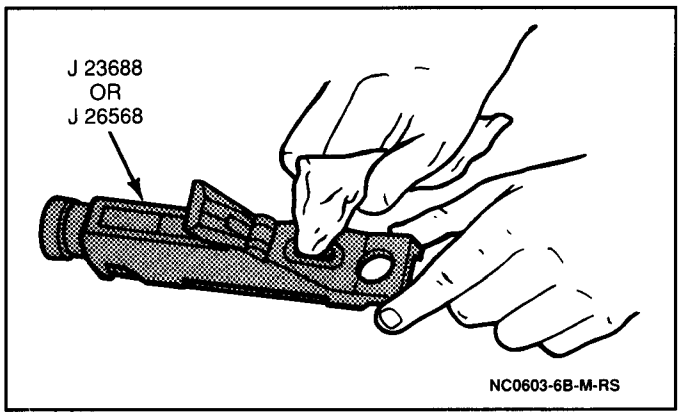

Figure 5 Cleaning Coolant Tester

- Wipe dry with a tissue or a clean, soft cloth.
- Close the plastic cover.

Important

- Do not remove the clear plastic pump from the J 26568 or J 23688.

1. Release the tip of the pump from tester.
2. Insert the tip of the pump into the radiator filler neck. Make certain that the tip of the pump is below the level of the coolant (Figure 6).

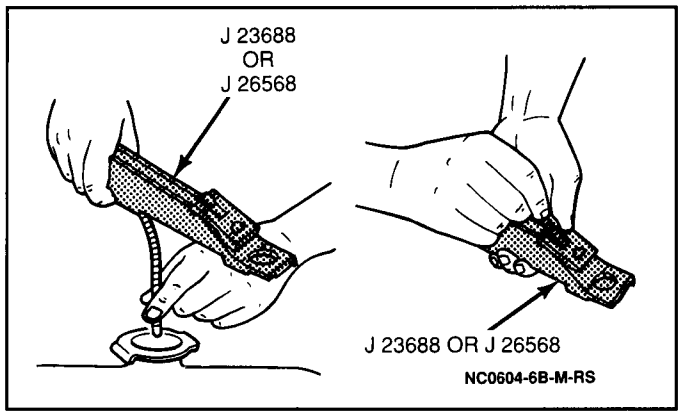

Figure 6 Collecting Coolant Samples

3. Press the release bulb to get a sample.
4. Insert the tip of the pump into the cover plate opening.
5. Press the bulb and allow a few drops to fall onto the measuring surface.

Important

- Do not open the plastic cover when taking readings because water evaporation can change the readings.

6. Point the J 26568 or J 23688 toward any light and look into the eyepiece (Figure 7).

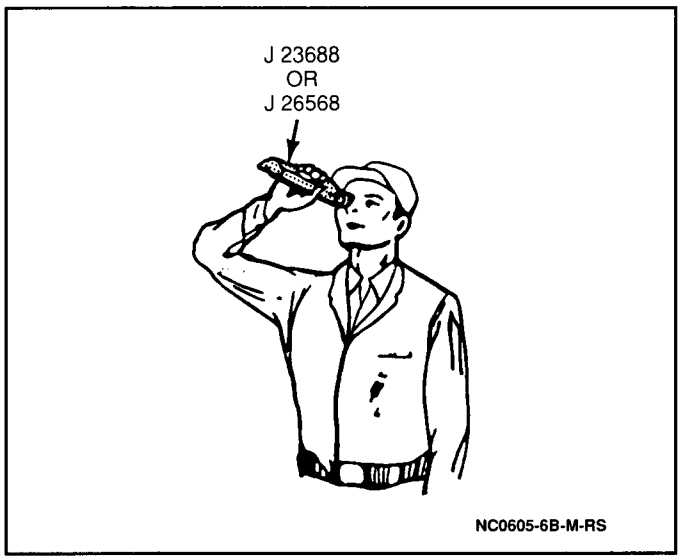

Figure 7 Reading the Coolant Tester

- Coolant protection reading is at the point where the dividing line between light and dark crosses the scale (antifreeze protection is the scale on the right).
- Temperature scale is reversed from a standard thermometer scale; below zero readings are on the upper half of the scale.
- If the readings are not clear, the measuring surfaces were not wiped and properly dried. Wipe dry and conduct test again.

HOSES AND CLAMPS INSPECTION

Inspect the condition of all hoses and clamps. Hoses should be flexible and show no signs of bulging. Inspect hoses for cracks, cuts, kinks and areas of possible leaks. Inspect for tracks from coolant leakage which has dried. Inspect the brackets, supports, ties and clamps. Tighten and adjust as needed.

CLEANING

CAUTION: Under some conditions, the ethylene glycol in engine coolant is combustible. To help avoid being burned, do not spill antifreeze or coolant on the exhaust system or hot engine parts.

CAUTION: Do not remove the radiator cap when the radiator is warm. Removing the cap immediately lowers the boiling point of the coolant, and could cause a violent overflow, resulting in a large coolant loss and personal injury.

Every twelve months the cooling system should be serviced as follows:

1. Check coolant for proper level and freeze protection.
2. Check hose clamps for tightness and inspect all hoses. Replace cracked, swollen or deteriorated hoses.
3. Clean the front of the radiator and A/C condenser (if so equipped).
4. Every two years or 48 000 kilometers (30,000 miles), whichever comes first, the cooling system should be drained and refilled. Refer to "Draining and Refilling the Cooling System" later in this section.

NOTICE: If recommended quality antifreeze (GM specification #1825-M or equivalent) is used, supplemental inhibitors or additives claiming to provide increased cooling capability are not necessary. They may in fact be detrimental to the efficient operation of the system, and represent an unnecessary operating expense.

DIAGNOSIS

THERMOSTAT TEST

Figure 8

This test requires that the thermostat be removed from the vehicle. Refer to "Thermostat" later in this section for removal and installation procedures.

1. Suspend the thermostat and a thermometer in a pan in a 50/50 mixture of ethylene glycol and water (Figure 8). Do not let the thermostat (or thermometer) rest on the bottom of the pan because of the uneven concentration of heat. This could result in inaccurate temperature measurements.

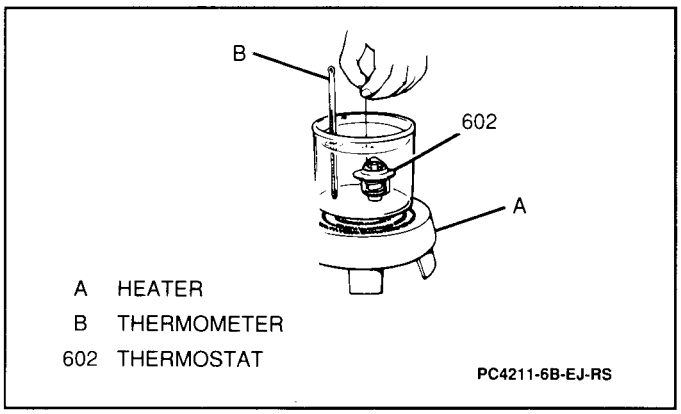

Figure 8 Checking Thermostat Valve Operation

2. Place the pan on a burner; heat and measure the temperature of the solution using a thermometer.
3. The thermostat valve opening temperature should be 80 to 84°C (176 to 183°F). The valve lift should be 8 mm (0.31-inch) or more at 95°C (203°F). If either of these specifications are not met, replace the thermostat.
4. Make sure that the valve spring is tight when the thermostat is fully closed. If the spring is not tight, replace the thermostat.

RADIATOR CAP

CAUTION: Under some conditions, the ethylene glycol in engine coolant is combustible. To help avoid being burned, do not spill antifreeze or coolant on the exhaust system or hot engine parts.

CAUTION: Do not remove the radiator cap when the radiator is warm. Removing the cap immediately lowers the boiling point of the coolant and could cause a violent overflow, resulting in a large coolant loss and personal injury.

Inspect

Tools Required:
J 24460-01 Cooling System Tester
J 33984-A Radiator Test Adapter

1. Cooling system for leaks and cracked pipes or hoses. Repair or replace pipes and/or hoses as necessary.
2. Coolant reservoir level and freeze protection.
3. Cooling system pressure capacity using a J 24460-01 and a J 33984-A. If cooling system does not maintain 90 kPa (13 psi) for two minutes, check for coolant leaks.
4. Radiator cap pressure using a J 24460-01 and a J 33984-A. If radiator cap does not maintain 90 kPa (13 psi) for two minutes, replace cap.

COOLING SYSTEM DIAGNOSTIC CHARTS

Figures 9 and 10

Refer to Figures 9 and 10 for cooling system problem diagnosis.

CONDITION	POSSIBLE CAUSE	CORRECTION
Engine overheats	Check coolant level and mixture	Add coolant
	Generator/coolant pump drive belt loose or missing	Adjust or replace belt
	Dirt, leaves, insects on front of radiator	Clean front of radiator
	Hoses, coolant pump, heater, thermostat housing, radiator, core plugs, or heads gasket leakage	Repair as necessary
	Thermostat faulty	Check thermostat
	Ignition timing retarded	Set timing. Refer to SECTION 6E2
	Improper cylinder head torque	Re-tighten the cylinder head bolts to specifications. Refer to SECTION 6A1. Replace the cylinder head gasket if required
	Leaking - intake manifold - cylinder head gasket - cylinder block plug - heater core - heater coolant valve, if equipped	Make repairs or replace components as necessary to correct the leak
Engine fails to reach normal operating temperature. Cool air from the heater	Thermostat stuck open or wrong type of thermostat	Install a new thermostat of the correct type and heat range
	Coolant is below the "ADD" mark	Add coolant
	Coolant pump faulty	Replace coolant pump
	Radiator plugged or faulty cap	Check radiator
	Cylinder head or block cracked or plugged	Repair as necessary

PC4204-6B-EJ-RS

Figure 9 Cooling System Diagnosis — 1 of 2

Loss of coolant	Leaking radiator	Inspect the radiator; repair as necessary
	Radiator cap faulty	Perform the radiator cap pressure test
	Leaking coolant recovery reservoir or hose	Replace the reservoir or hose
	Loose or damaged radiator or heater hoses or connections	Reseat the hoses; replace the hoses or clamps
	Coolant pump seal leaking	Replace the coolant pump
	Coolant pump gasket leaking	Replace the gasket

LC6002-6B-JT-RS

Figure 10 Cooling System Diagnosis — 2 of 2

ON-VEHICLE SERVICE

DRAINING AND REFILLING THE COOLING SYSTEM

Figures 11 through 15

CAUTION: Under some conditions, the ethylene glycol in engine coolant is combustible. To help avoid being burned, do not spill antifreeze or coolant on the exhaust system or hot engine parts.

CAUTION: Do not remove the radiator cap when the radiator is warm. Removing the cap immediately lowers the boiling point of the coolant, and could cause a violent overflow, resulting in a large coolant loss and personal injury.

The cooling system has been filled (by the manufacturer) with coolant that is a 50/50 mixture of water and ethylene glycol antifreeze. This coolant solution provides freezing protection to -36°C (-33°F) (Figures 11 through 14).

ANTI-FREEZE PROPORTIONING CHART

For manual transmission model

Freezing temperature	°C	-16	-36
	°F	3	-33
Anti-freeze/Anti-corrosion coolant concentration	%	30	50
Ratio of compound to cooling water	ltr.	1.59/3.71	2.65/2.65
	US pt.	3.36/7.84	5.60/5.60
	Imp. pt.	2.80/6.53	4.66/4.66

KC1053-6B-JT-SA

Figure 11 Antifreeze Chart for Manual Transmission

ANTI-FREEZE PROPORTIONING CHART

For automatic transmission model

Freezing temperature	°C	-16	-36
	°F	3	-33
Anti-freeze/Anti-corrosion coolant concentration	%	30	50
Ratio of compound to cooling water	ltr.	1.56/3.64	2.60/2.60
	US pt.	3.30/7.69	5.49/5.49
	Imp. pt.	2.75/6.40	4.57/4.57

KC1054-6B-JT-SA

Figure 12 Antifreeze Chart for Automatic Transmission

For manual transmission model

COOLANT CAPACITY	
Engine, radiator and heater	4.7 liters (9.9/8.2 US/Imp pt.)
Reservoir tank	0.6 liters (1.3/1.1 US/Imp pt.)
Total	5.3 liters (11.2/9.3 US/Imp pt.)

KC1055-6B-JT-SA

Figure 13 Coolant Capacity for Manual Transmission

For automatic transmission model

COOLING CAPACITY	
Engine, radiator and heater	4.6 liters (9.7/8.1 US/Imp pt.)
Reservoir tank	0.6 liters (1.3/1.1 US/Imp pt.)
Total	5.2 liters (11.0/9.20 US/Imp pt.)

KC1056-6B-JT-SA

Figure 14 Coolant Capacity for Automatic Transmission

Important

- Maintain cooling system protection at -36°C (-33°F) to ensure protection against corrosion and loss of coolant from boiling. This level of protection should be maintained even if extreme temperatures are not expected.
- Add ethylene glycol-based coolant to the coolant reservoir when the coolant level is low or to provide added protection against freezing temperatures lower than -36°C (-33°F).

NOTICE: Alcohol, methanol-based coolants or plain water alone should not be used in the cooling system at any time. Damage to the cooling system could result from their use.

1. Remove radiator cap.
2. Start and run engine for 15 minutes.
3. Stop the engine and open the drain cock on the radiator to drain the coolant into a suitable container (Figure 15).

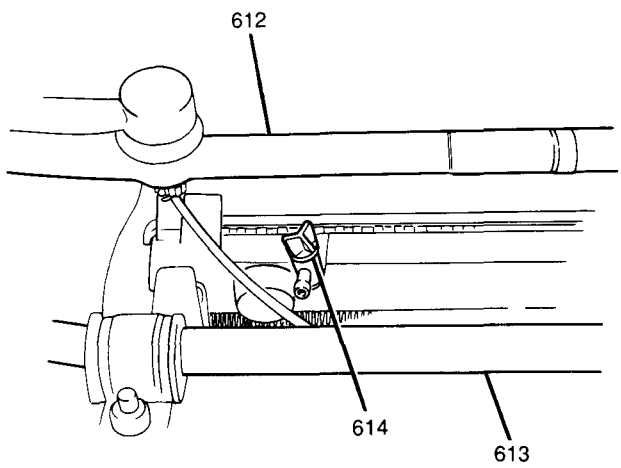

612 CENTER LINK
613 STABILIZER BAR
614 RADIATOR DRAIN COCK

PC4215-6B-EJ-RS

Figure 15 Radiator Drain Cock

Important

- Dispose of used coolant in a proper fashion, i.e., in used coolant holding tank which is picked up along with used oil. NEVER POUR USED COOLANT DOWN THE DRAIN. Ethylene glycol antifreeze is a very toxic chemical; do not dispose of it into the sewer system or ground water.

4. Close the drain cock. Add water to fill the cooling system.
5. Repeat Steps 2, 3 and 4 until the drained water is clean.
6. Close radiator drain cock.
7. Remove hose from reservoir cap, two bolts and coolant reservoir from vehicle.

Clean

- Inside of coolant reservoir with soap and water. Rinse thoroughly.

8. Install coolant reservoir to vehicle; secure with two bolts.

Tighten

- Coolant reservoir bolts to 11 N·m (97 lb.in.).

9. Fill radiator with a 50/50 mixture of ethylene glycol coolant GM P/N 1052753, or equivalent, and water up to base of radiator filler neck and fill coolant reservoir up to "FULL" mark on reservoir.
10. Install reservoir cap on reservoir and align marks on cap and reservoir.
11. Install reservoir hose to reservoir cap.
12. Start and run engine until coolant is at running temperature (both hoses feel warm and coolant is moving in radiator). Add coolant as necessary to radiator until coolant reaches radiator filler neck.
13. Install radiator cap.

Inspect

- Check radiator, coolant reservoir and all coolant pipe and hose connections for any signs of leaks. Tighten as necessary.

Cooling System Flushing

Always remove the thermostat prior to flushing the cooling system. Various methods and equipment can be used for flushing. If using special equipment such as a back flusher, follow the manufacturer's instructions.

THERMOSTAT

Figure 16

Remove or Disconnect

1. Radiator cap.
- Open drain cock and drain coolant into an appropriate container to a level below the thermostat.
- Close drain cock.
2. Two bolts and thermostat cap from intake manifold (Figure 16).

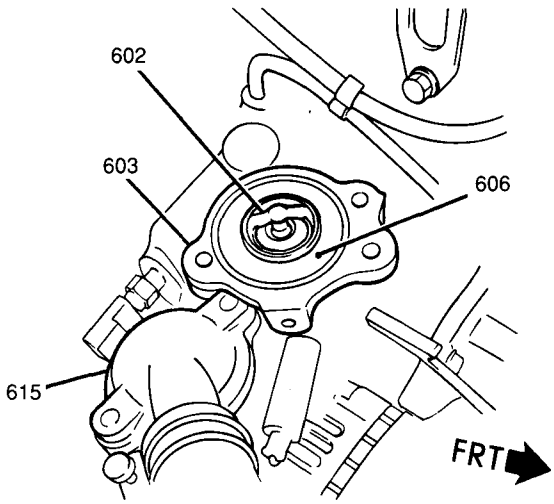

602 THERMOSTAT
603 INTAKE MANIFOLD
606 AIR BLEED VALVE
615 THERMOSTAT CAP
PC4218-6B-EJ-RS

Figure 16 Thermostat and Thermostat Cap

3. Thermostat and gasket from thermostat housing.

Clean

- Thermostat cap and intake manifold mating surfaces of gasket material, corrosion and debris.

Inspect

- Refer to "Thermostat Test" earlier in this section.

Install or Connect

Important

- Position air bleed valve toward front of vehicle (Figure 16).

- Thermostat, with new thermostat gasket, and thermostat cap to intake manifold; secure cap with two bolts.

Tighten

- Thermostat cap bolts to 27 N·m (20 lb.ft.).

- Fill radiator with approved coolant. Refer to "Draining and Refilling the Cooling System" earlier in this section.

Inspect

- Remove radiator cap, start engine, bringing coolant to operating temperature (both hoses feel warm and coolant is flowing through radiator), and check for leaks in cooling system.
- Shut off engine and install radiator cap.

GENERATOR/COOLANT PUMP DRIVE BELT

Figure 17

Remove or Disconnect

1. Air conditioning (A/C) compressor drive belt (if equipped). Refer to SECTION 1B.
   - Loosen tension on generator/coolant pump drive belt by loosening generator upper mounting bolt.
2. Generator/coolant pump drive belt from pulleys.

Inspect

- Generator/coolant pump drive belt for wear or cracks. Replace as necessary.

Install or Connect

1. Generator/coolant pump drive belt to pulleys.
2. A/C compressor drive belt to pulleys (if equipped). Refer to SECTION 1B.

Adjust

- Air conditioner compressor drive belt (if equipped). Refer to SECTION 1B.
- Generator/coolant pump drive belt tension so the belt deflects 5 to 8 mm (0.20 to 0.32-inch) under 10 kg (22 lbs.) of applied pressure (Figure 17).

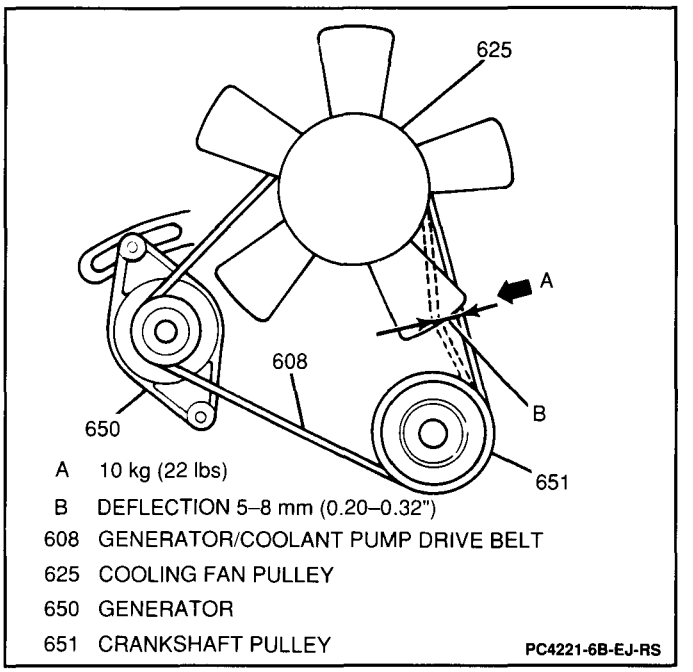

Figure 17 Generator/Coolant Pump Drive Belt Adjustment

Tighten

- Generator upper mounting bolt to 27 N·m (20 lb.ft.) while holding generator/coolant pump drive belt tension.

COOLANT PUMP

Figure 17

Remove or Disconnect

1. Radiator cap.
   - Open drain cock and drain coolant into appropriate container.
   - Close drain cock.
2. Two bolts securing A/C flexible hose to radiator (if equipped); reposition to the rear.
3. Four bolts securing shroud to radiator and four fan clutch mounting nuts.
4. Shroud, fan clutch and cooling fan together.
5. Coolant pump pulley from coolant pump shaft, disengaging generator/coolant pump drive belt as pulley is removed.
6. Five bolts and crankshaft pulley from crankshaft.

Important

- It is not necessary to remove the crankshaft pulley center bolt when removing the crankshaft pulley.

7. Timing belt. Refer to SECTION 6A1.
8. Loosen A/C compressor drive belt (if equipped). Refer to SECTION 1B.
9. One bolt and engine oil level indicator tube, with O-ring, from oil pump.
10. Generator mounting bolt and bracket at coolant pump.
11. Timing belt tensioner and pulley. Refer to SECTION 6A1.
12. Five coolant pump mounting bolts and coolant pump with gasket and rubber seals from engine.

Clean

- Mating surfaces on coolant pump and engine block of gasket material, corrosion and debris.

Install or Connect

1. Coolant pump with new gasket to engine; secure with five bolts.

Tighten

- Coolant pump bolts to 12 N·m (106 lb.in.).

2. Rubber seals between coolant pump and oil pump and between coolant pump and cylinder head.
3. Engine oil level indicator tube to engine; secure with mounting bolt. Do not tighten fully.
4. Generator mounting bracket to coolant pump; secure with mounting bolt. Do not tighten fully.

Tighten

- Engine oil level indicator tube mounting bolt to 11 N·m (97 lb.in.).

5. Timing belt tensioner and pulley. Refer to SECTION 6A1.
6. Timing belt. Refer to SECTION 6A1.
7. Crankshaft pulley; secure with five bolts.

Tighten

- Crankshaft pulley bolts to 16 N·m (12 lb.ft.).

- Position generator/coolant pump drive belt on pulley before installing coolant pump pulley.

8. Coolant pump pulley to coolant pump shaft.

Important

- Fan clutch, cooling fan and radiator shroud must be installed together because of insufficient clearance to install in separate steps.

9. Fan clutch, cooling fan and shroud; secure with four fan clutch nuts and four shroud bolts.

Tighten

- Fan clutch nuts to 11 N·m (97 lb.in.).
- Shroud bolts to 11 N·m (97 lb.in.).

Adjust

- Air conditioner compressor drive belt (if equipped). Refer to SECTION 1B.
- Generator/coolant pump drive belt tension so the belt deflects 5 to 8 mm (0.20 to 0.32-inch) under 10 kg (22 lbs.) of applied pressure (Figure 17).

Tighten

- Generator upper mounting bolt to 27 N·m (20 lb.ft.) while holding generator/coolant pump drive belt tension.

- Fill radiator with approved coolant. Refer to "Draining and Refilling the Cooling System" earlier in this section.

10. Radiator cap to radiator.
    - Reposition A/C flexible hose to radiator (if equipped); secure with two bolts.

Tighten

- Air conditioning flexible hose bolts to 15 N·m (11 lb.ft.).

COOLANT RESERVOIR

Figures 18 and 19

Remove or Disconnect

1. Two coolant overflow hoses from reservoir cap (Figure 18).

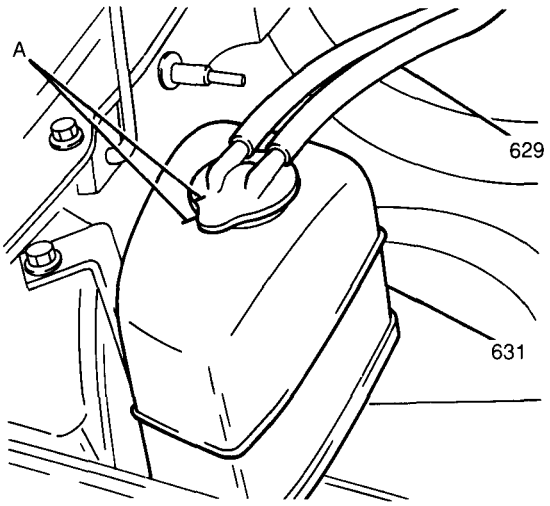

A ALIGNMENT MARKS
629 COOLANT OVERFLOW HOSE
631 COOLANT RESERVOIR
PC4210-6B-EJ-RS

Figure 18 Coolant Reservoir Cap and Coolant Overflow Hoses

2. Two bolts and reservoir with bracket from front upper panel (Figure 19).
- Slide reservoir from bracket.

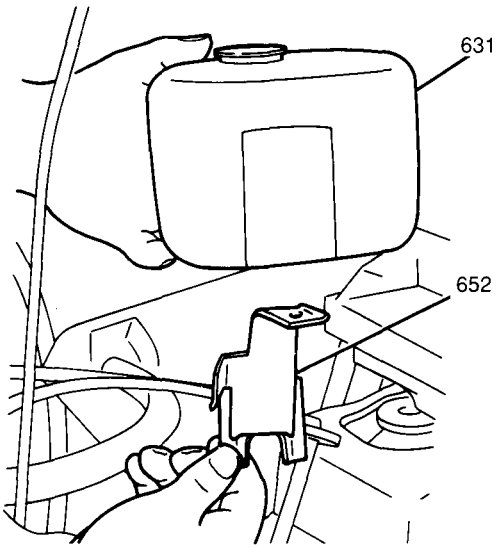

631 COOLANT RESERVOIR
652 COOLANT RESERVOIR BRACKET
PC4225-6B-EJ-RS

Figure 19 Coolant Reservoir

Install or Connect

- Slide reservoir into bracket.

1. Reservoir with bracket to front upper panel; secure with two bolts.

Tighten

- Coolant reservoir bolts to 15 N·m (11 lb.ft.).

2. Two coolant overflow hoses to reservoir cap.

RADIATOR

Figures 20, 21 and 22

Remove or Disconnect

1. Radiator cap.
- Raise and suitably support vehicle. Refer to SECTION 0A.
- Open drain cock and drain radiator into appropriate container.
- Close drain cock.
- Place pan under radiator to catch any transmission fluid which may leak.

2. Hose clamps and transmission fluid cooler hoses from radiator (automatic transmission equipped vehicles) (Figure 20).

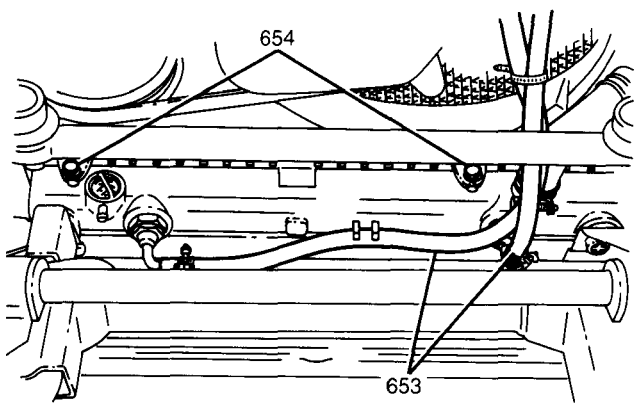

653 TRANSMISSION FLUID COOLER HOSES
654 LOWER SHROUD BOLTS
PC4227-6B-EJ-RS

Figure 20 Transmission Fluid Cooler Hoses and Lower Shroud Bolts

3. Two lower shroud bolts (Figure 20).
- Loosen hose clamp and remove radiator outlet hose #1 from radiator.
- Lower vehicle.

4. Two bolts and reposition A/C flexible hose to rear (if equipped) (Figure 21).

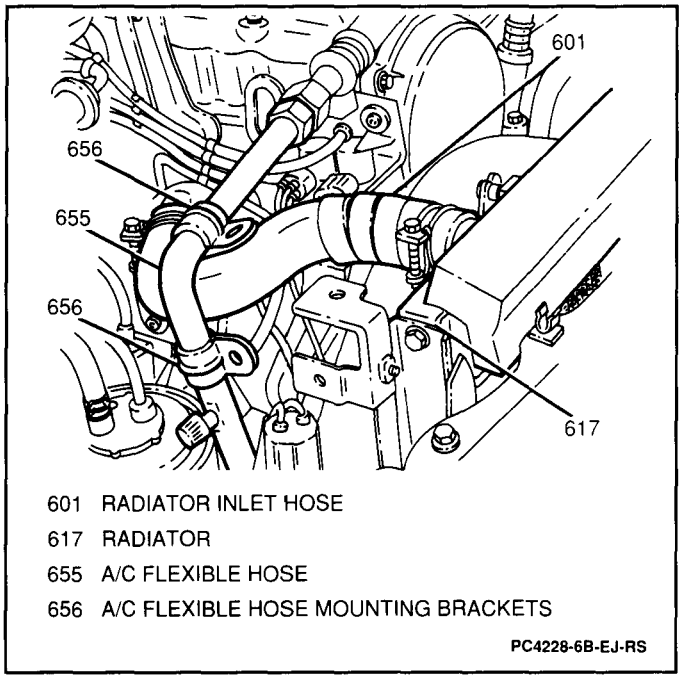

Figure 21 Repositioning A/C Flexible Hose

5. Two bolts and reposition power steering fluid reservoir (if equipped).
6. Two upper shroud bolts and reposition shroud to the rear.
- Loosen hose clamp and remove radiator inlet hose from radiator.
- Loosen hose clamp and remove radiator overflow hose from radiator filler neck.
7. Four bolts and radiator from vehicle (Figure 22).

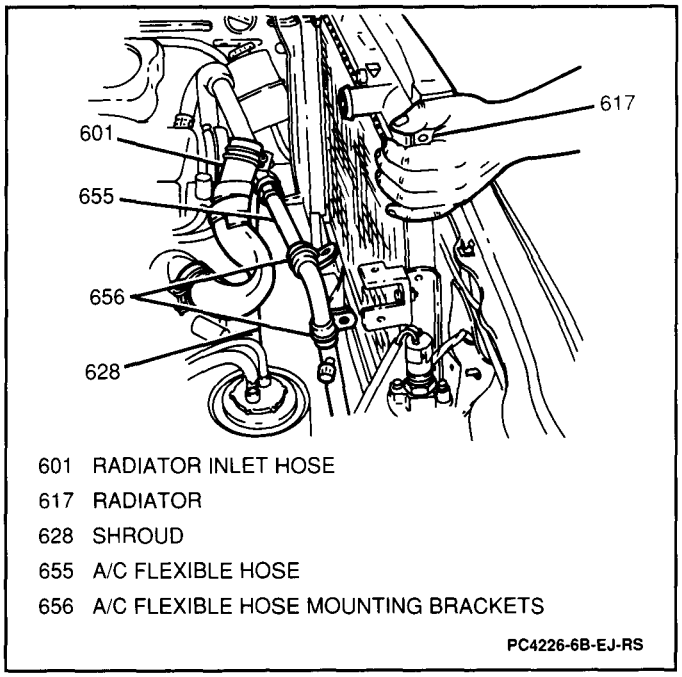

Figure 22 Removing Radiator

Install or Connect

1. Radiator to vehicle; secure with four bolts.

Tighten

- Radiator bolts to 10 N·m (89 lb.in.).

2. Overflow hose to radiator filler neck; secure with hose clamps after positioning over filler neck flares.
3. Radiator inlet hose to radiator; secure with hose clamp after positioning over radiator flares.
- Reposition shroud to radiator; secure with two bolts.

Tighten

- Shroud bolts to 11 N·m (97 lb.in.).

- Reposition A/C flexible hose to top of shroud (if equipped); secure with two bolts.

Tighten

- Air conditioning flexible hose bolts to 15 N·m (11 lb.ft.).

4. Reposition power steering fluid reservoir (if equipped); secure with two bolts.

Tighten

- Power steering fluid reservoir bolts to 15 N·m (11 lb.ft.).

- Raise and suitably support vehicle. Refer to SECTION 0A.
5. Transmission fluid cooler hoses to radiator (automatic transmission equipped vehicles); secure with hose clamps.
6. Radiator outlet hose #1 to radiator; secure with hose clamp after positioning over radiator flares.
7. Two lower shroud bolts.

Tighten

- Shroud bolts to 11 N·m (97 lb.in.).

- Lower vehicle.
- Fill radiator with approved coolant. Refer to "Draining and Refilling the Cooling System" earlier in this section.
8. Radiator cap to radiator.

Inspect

- Transmission fluid level (automatic transmission equipped vehicles). Refer to SECTION 7A.

COOLANT HOSES AND PIPES

Radiator Inlet Hose

Figure 23

Remove or Disconnect

1. Radiator cap.
- Start and run engine for 15 minutes.
- Stop the engine and open the drain cock on the radiator to drain the coolant into a suitable container.
- Loosen and reposition hose clamp on radiator inlet hose at radiator (Figure 23).

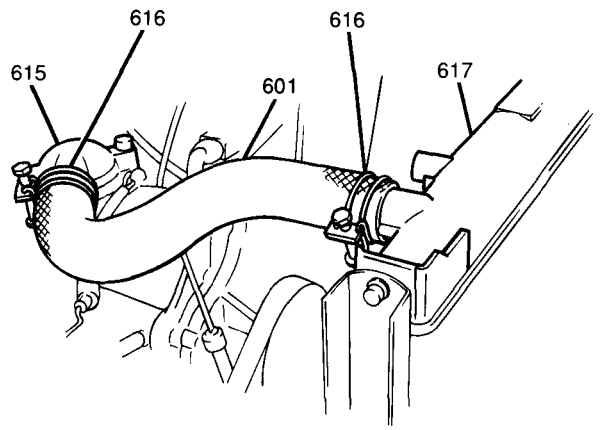

601 RADIATOR INLET HOSE
615 THERMOSTAT CAP
616 HOSE CLAMP
617 RADIATOR

PC4216-6B-EJ-RS

Figure 23 Radiator Inlet Hose

- Loosen and reposition hose clamp on radiator inlet hose at thermostat cap.
2. Radiator inlet hose.

Install or Connect

- Position a new hose clamp on each end of new radiator inlet hose before installation.
- New radiator inlet hose to thermostat cap and radiator; secure with two hose clamps after positioning over thermostat and radiator flares.
- Fill radiator with approved coolant. Refer to "Draining and Refilling the Cooling System" earlier in this section.

Radiator Outlet Hose #1

Figure 24

Remove or Disconnect

1. Radiator cap.
- Start and run engine for 15 minutes.
- Stop the engine and open the drain cock on the radiator to drain the coolant into a suitable container.
- Loosen and reposition hose clamp on radiator outlet hose #1 at radiator (Figure 24).

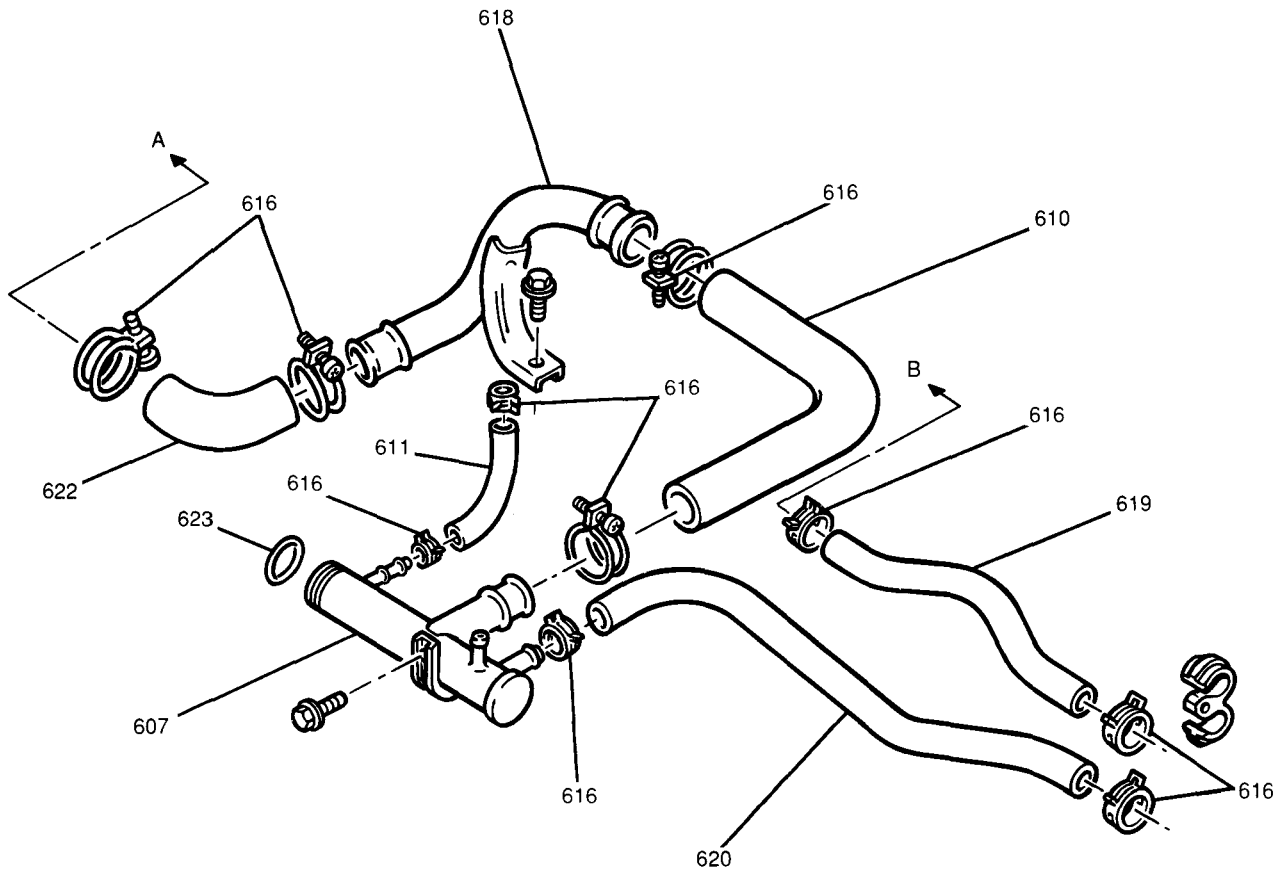

A RADIATOR OUTLET
B COOLANT INTAKE
607 COOLANT INTAKE PIPE
610 RADIATOR OUTLET HOSE #2
611 BYPASS HOSE
616 HOSE CLAMP
618 RADIATOR OUTLET PIPE
619 HEATER CORE OUTLET HOSE
620 HEATER CORE INLET HOSE
622 RADIATOR OUTLET HOSE #1
623 O-RING SEAL

PC4217-6B-EJ-RS

Figure 24 Engine Coolant Pipes and Hoses

- Loosen and reposition hose clamp on radiator outlet hose #1 at radiator outlet pipe.

2. Radiator outlet hose #1.

Install or Connect

- Position a new hose clamp on each end of new radiator outlet hose #1 before installation.
- New radiator outlet hose #1 to outlet pipe and radiator; secure with hose clamps after positioning over outlet pipe and radiator flares.
- Fill radiator with approved coolant. Refer to "Draining and Refilling the Cooling System" earlier in this section.

Radiator Outlet Pipe

Figure 24

Remove or Disconnect

1. Radiator cap.
- Start and run engine for 15 minutes.
- Stop the engine and open the drain cock on the radiator to drain the coolant into a suitable container.
- Loosen and reposition radiator outlet hose clamp securing radiator outlet pipe to radiator outlet hose #1 (Figure 24).
- Loosen and reposition radiator outlet hose clamp securing radiator outlet pipe to radiator outlet hose #2 (Figure 24).

2. One bolt and radiator outlet pipe from vehicle.

Install or Connect

- Position new hose clamps on open ends of radiator outlet hoses #1 and #2 before installation of radiator outlet pipe.

1. Radiator outlet pipe to vehicle; secure with one bolt in outlet pipe support.

Tighten

- Outlet pipe support bolt to 11 N·m (97 lb.in.).

2. Radiator outlet hoses #1 and #2 to radiator outlet pipe; secure with hose clamps after positioning over coolant intake pipe flares.
- Fill radiator with approved coolant. Refer to "Draining and Refilling the Cooling System" earlier in this section.

Radiator Outlet Hose #2

Figure 24

Remove or Disconnect

- Radiator cap.
- Start and run engine for 15 minutes.
- Stop the engine and open the drain cock on the radiator to drain the coolant into a suitable container.
- Loosen two hose clamps on outlet hose #2 and remove hose from radiator outlet pipe and coolant intake pipe (Figure 24).

Install or Connect

- Position new hose clamps on both ends of radiator outlet hose #2 before installation.
- New radiator outlet hose #2 on radiator outlet pipe and opposite end on coolant intake pipe; secure with two hose clamps after positioning over coolant intake pipe and radiator outlet pipe flares.
- Fill radiator with approved coolant. Refer to "Draining and Refilling the Cooling System" earlier in this section.

Coolant Intake Pipe

Figure 24

Remove or Disconnect

1. Radiator cap.
- Start and run engine for 15 minutes.
- Stop the engine and open the drain cock on the radiator to drain the coolant into a suitable container.
- Loosen and reposition four hose clamps.

2. Two bypass hoses, radiator outlet hose #1 and heater core inlet hose from coolant intake pipe (Figure 24).
3. One bolt from coolant intake pipe support and coolant intake pipe from vehicle
4. O-ring seal from coolant intake pipe.

Install or Connect

- Position new hose clamps on open ends of two bypass hoses, radiator outlet hose #1 and heater core inlet hose before installation of coolant intake pipe.

1. New O-ring seal to coolant intake pipe.
2. Coolant intake pipe to vehicle; secure with one bolt.

Tighten

- Coolant intake pipe bolt to 11 N·m (97 lb.in.).

3. Two bypass hoses, radiator outlet hose #1 and heater core inlet hose to coolant intake pipe; secure with four hose clamps after positioning over coolant intake pipe flares.
- Fill radiator with approved coolant. Refer to "Draining and Refilling the Cooling System" earlier in this section.

Coolant Bypass Hose

Figure 24

Remove or Disconnect

1. Radiator cap.
- Start and run engine for 15 minutes.
- Stop the engine and open the drain cock on the radiator to drain the coolant into a suitable container.
- Loosen and reposition one hose clamp at intake manifold end and one hose clamp at coolant intake pipe end of coolant bypass hose (Figure 24).
2. Coolant bypass hose from vehicle.

Install or Connect

- Position a new hose clamp on each end of coolant bypass hose before installation.
- Coolant bypass hose to vehicle; secure with two coolant bypass hose clamps after positioning over coolant intake pipe and intake manifold flares.
- Fill radiator with approved coolant. Refer to "Draining and Refilling the Cooling System" earlier in this section.

Heater Core Inlet Hose

Figure 24

Remove or Disconnect

1. Radiator cap.
- Start and run engine for 15 minutes.
- Stop the engine and open the drain cock on the radiator to drain the coolant into a suitable container.
- Loosen hose clamps at both ends of heater core inlet hose (Figure 24).
2. Heater core inlet hose from vehicle (Figure 24).

Install or Connect

- Position a new hose clamp on each end of heater core inlet hose before installation.
1. Heater core inlet hose to vehicle; secure with two heater core inlet hose clamps after positioning over heater core and coolant intake pipe flares.
- Fill radiator with approved coolant. Refer to "Draining and Refilling the Cooling System" earlier in this section.
2. Radiator cap to radiator.

Heater Core Outlet Hose

Figure 24

Remove or Disconnect

1. Radiator cap.
- Start and run engine for 15 minutes.
- Stop the engine and open the drain cock on the radiator to drain the coolant into a suitable container.
- Loosen hose clamps at both ends of heater core outlet hose.
2. Heater core outlet hose from vehicle (Figure 24).

Install or Connect

- Position a new hose clamp on each end of heater core outlet hose before installation.
- Heater core outlet hose to vehicle; secure with two heater core outlet hose clamps after positioning over heater core and coolant intake flares.
- Fill radiator with approved coolant. Refer to "Draining and Refilling the Cooling System" earlier in this section.

COOLING FAN AND FAN CLUTCH

Figures 25 and 26

Remove or Disconnect

1. Radiator cap.
- Open drain cock and drain coolant to level below thermostat.
- Close drain cock.
2. Hose clamp and radiator inlet hose.
3. Four bolts securing shroud to radiator and four fan clutch mounting nuts.
4. Shroud, fan clutch and cooling fan together (Figures 25 and 26).

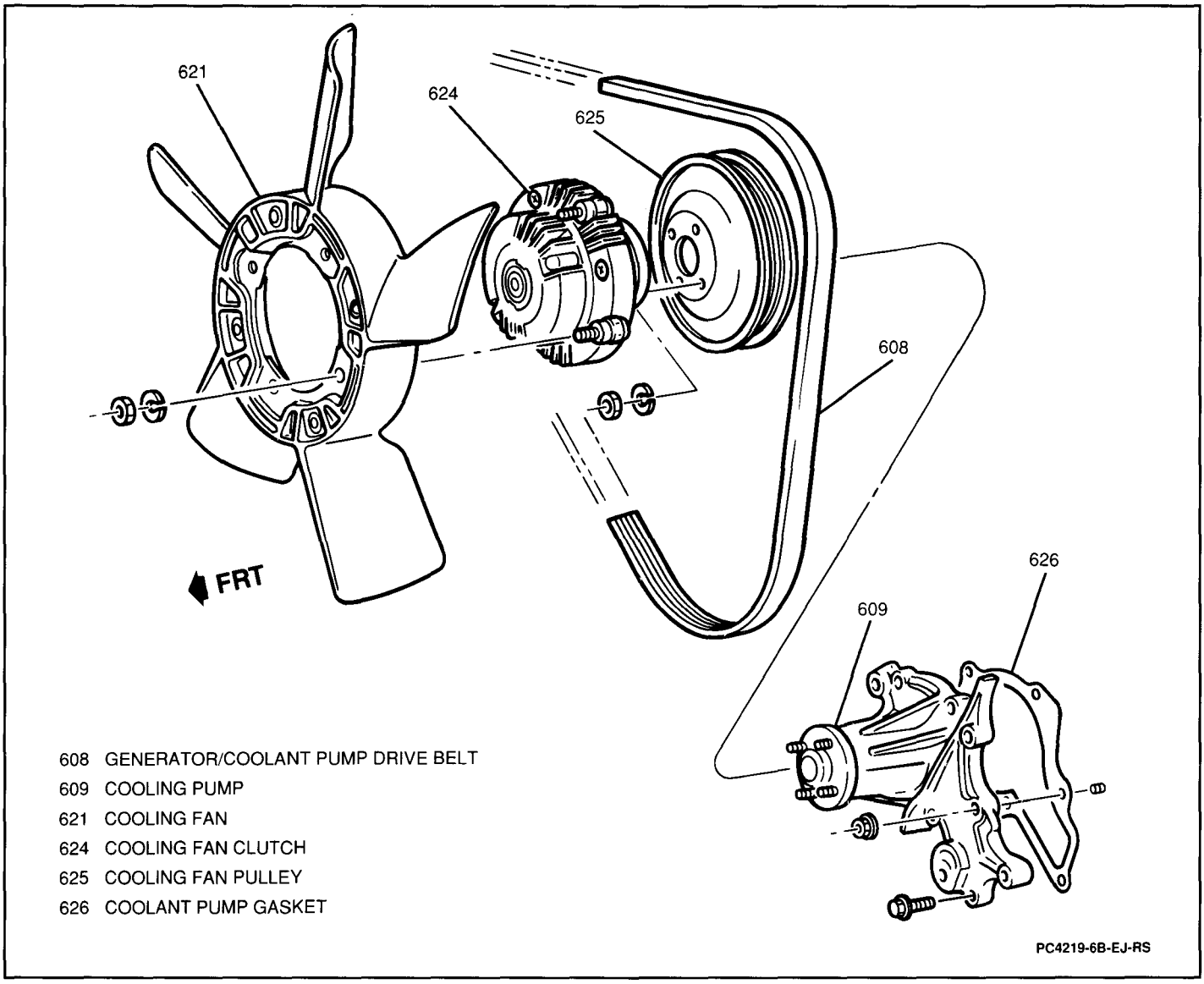

Figure 25 Cooling Fan, Fan Clutch, Coolant Pump and Pulley

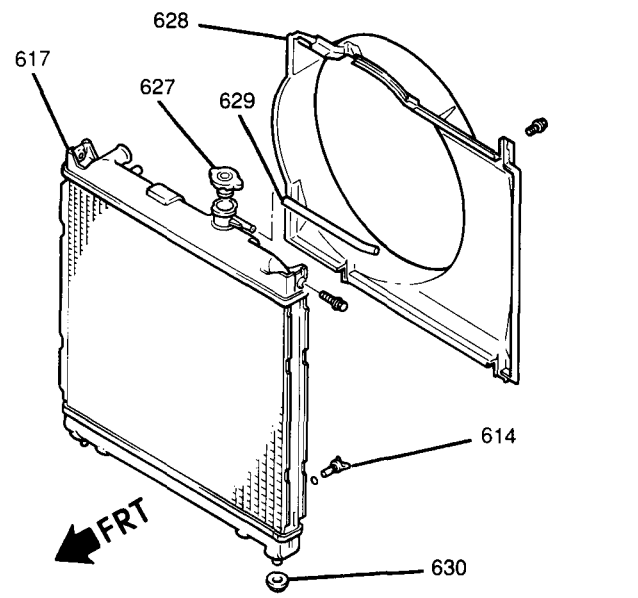

614 RADIATOR DRAIN COCK
617 RADIATOR
627 RADIATOR CAP
628 SHROUD
629 COOLANT OVERFLOW HOSE TO RESERVOIR
630 MOUNTING BUSHING PC4220-6B-EJ-RS

Figure 26 Radiator and Shroud

Disassemble

- Four nuts and washers from cooling fan and remove fan clutch.

Inspect

1. Cooling fan for cracks or broken blades. Replace if necessary.
2. Fan clutch for binding, cracks, or worn bearing. Replace as necessary.

Assemble

- Cooling fan to fan clutch; secure with four washers and nuts.

Tighten

- Cooling fan nuts to 11 N·m (97 lb.in.).

Install or Connect

Important

- Fan clutch, cooling fan and shroud must be installed together because of insufficient clearance to install in separate steps

1. Fan clutch, cooling fan and shroud; secure with four fan clutch nuts and four shroud bolts.

Tighten

- Fan clutch nuts to 11 N·m (97 lb.in.).
- Shroud bolts to 11 N·m (97 lb.in.).

2. Radiator inlet hose; secure with hose clamp after positioning over radiator flare.

- Fill radiator with approved coolant. Refer to "Draining and Refilling the Cooling System" earlier in this section.

Inspect

- Remove radiator cap, start engine, bringing coolant to operating temperature (hoses warm to the touch and coolant flowing through radiator), and check for leaks in cooling system.
- Shut off engine and install radiator cap.

SPECIFICATIONS

FASTENER TORQUES

Air Conditioning Flexible Hose Bolts	15 N·m (11 lb.ft.)
Coolant Reservoir Bolts	15 N·m (11 lb.ft.)
Cooling Fan Nuts	11 N·m (97 lb.in.)
Coolant Pump Bolts	12 N·m (106 lb.in.)
Crankshaft Pulley Bolts	16 N·m (12 lb.ft.)
Engine Oil Level Indicator Tube Mounting Bolt	11 N·m (97 lb.in.)
Fan Clutch Nuts	11 N·m (97 lb.in.)
Generator Mounting Bracket Bolt	23 N·m (17 lb.ft.)
Generator Upper Mounting Bolt	27 N·m (20 lb.ft.)
Coolant Intake Pipe Bolt	11 N·m (97 lb.in.)
Outlet Support Pipe Bolt	11 N·m (97 lb.in.)
Power Steering Fluid Reservoir Bolts	15 N·m (11 lb.ft.)
Radiator Bolts	10 N·m (89 lb.in.)
Shroud Bolts.	11 N·m (97 lb.in.)
Thermostat Cap Bolts	27 N·m (20 lb.ft.)

GENERAL SPECIFICATIONS

Thermostat Valve Opening Temperature	80-95°C (176-203°F)
Thermostat Valve Lift (Minimum)	8 mm (0.31 in.) at 95°C (203°F)
Cooling System Pressure Capacity	90 kPa (13 psi)
Radiator Cap Pressure Capacity	90 kPa (13 psi)
Coolant Solution Protection Point	36°C (-33°F)
Generator/Coolant Pump Drive Belt Deflection	5-8 mm (0.20-0.32 in.) at 10 kg (22 lbs.) applied pressure

SERVICE PARTS INFORMATION

Component Name Used in Section 6B	Reference Name in Service Parts Catalog	Group Number
Radiator	Radiator, Coolant	1.219
Shroud	Shroud, Radiator Fan	1.277
Reservoir	Tank, Coolant Recovery Reservoir	1.240
Radiator Cap	Cap, Radiator Filler	1.203
Coolant Pump	Pump Assembly, Engine Water	1.069
Fan Clutch	Clutch Assembly, Engine Cooling Fan	1.050
Cooling Fan	Fan, Engine Cooling	1.055
Coolant Pump Pulley	Pulley, Engine Water Pump	1.062
Generator/Coolant Pump Drive Belt	Belt, Engine Water Pump	1.066
Hose Clamp	Hose, Engine Radiator Hose	1.166
	Clamp	8.948
Radiator Inlet Hose	Hose, Engine Radiator Inlet	1.159
Thermostat	Thermostat Assembly, Engine Water	1.246
Thermostat Cap	Cap, Engine Thermostat	1.153
Coolant Inlet Pipe	Pipe, Engine Water Inlet	1.097
O-Ring	Seal, Engine Water Inlet Pipe	1.097
Radiator Outlet Pipe	Pipe, Engine Radiator Water Outlet	1.173
Radiator Outlet Hose #1	Hose, Engine Radiator Outlet	1.173
Radiator Outlet Hose #2	Hose, Engine Radiator Outlet	1.173
Bypass Hose	Hose, Engine Radiator Water Bypass	1.097
Heater Core Inlet Hose	Hose, Engine Heater Core Inlet	8.846
Heater Core Outlet Hose	Hose, Engine Heater Core Outlet	8.846

SPECIAL TOOLS

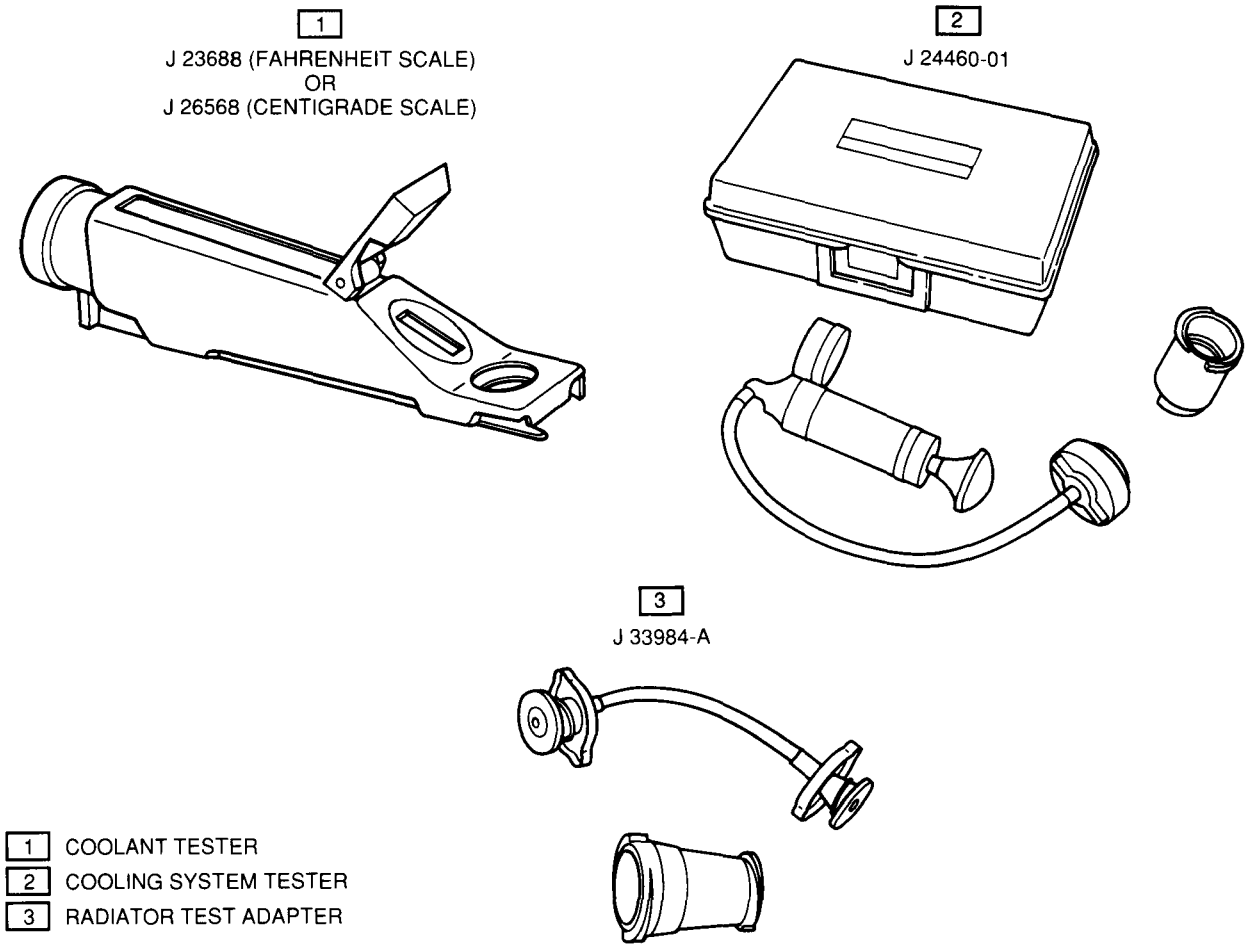

SECTION 6C

ENGINE FUEL

NOTICE: When fasteners are removed, always reinstall them at the same location from which they were removed. If a fastener needs to be replaced, use the correct part number fastener for that application. If the correct part number fastener is not available, a fastener of equal size and strength (or stronger) may be used. Fasteners that are not reused, and those requiring thread-locking compound, will be called out. The correct torque values must be used when installing fasteners that require them. If the above procedures are not followed, parts or system damage could result.

CONTENTS

General Description 6C-1
Fuel Tank 6C-2
Fuel Tank Filler Neck 6C-3
Fuel Filler Cap 6C-3
Fuel Gage Sending Unit 6C-3
Fuel Pump 6C-4
Fuel Filter 6C-4
Fuel Feed and Return Pipes and Hoses 6C-4
Fuel Vapor Pipe and Hoses 6C-4
Accelerator Controls 6C-5
Diagnosis 6C-5
Alcohol-in-Fuel 6C-5
Testing Procedure 6C-5
Fuel Tank Leak Check 6C-5
Fuel System Pressure Test 6C-5
Fuel Gage Sending Unit Diagnosis 6C-5
Fuel Pump Electrical Diagnosis 6C-5
On-Vehicle Service 6C-6
Fuel System Pressure Relief 6C-6
Fuel Filter 6C-6
Draining Fuel Tank 6C-7
Fuel Tank Replacement 6C-7
Fuel Gage Sending Unit Replacement 6C-10
Fuel Pump Replacement 6C-10
Fuel System Cleaning 6C-10
Fuel Feed, Return and Vapor Pipes and Hoses Repair/Replacement 6C-11
Accelerator Control Cable Replacement 6C-12
Accelerator Control Cable Adjustment 6C-13
Accelerator Pedal Replacement 6C-13
Specifications 6C-13
Torque Specifications 6C-13
Fuel Specifications 6C-13
Service Parts Information 6C-14

GENERAL DESCRIPTION

The fuel supply is stored in the fuel tank. An electric fuel pump, attached to the top of the fuel tank, pumps fuel through an in-line fuel filter to the throttle body injection unit. The pump is designed to provide fuel at a pressure above the regulated pressure needed by the fuel injector. A pressure regulator keeps fuel available to the injector at a regulated pressure. Unused fuel is returned to the fuel tank by a separate hose and pipe.

This vehicle's engine is designed to use only unleaded fuel. Unleaded fuel must be used for proper emission control system operation. Using unleaded fuel will also decrease spark plug fouling and extend engine oil life. Leaded fuel can damage the emission control system, and its use can result in loss of emission warranty coverage.

This vehicle is also equipped with an evaporative emission system that minimizes the escape of fuel vapors to the atmosphere. For more information on this system, refer to SECTION 6E2-C3.

FUEL TANK

Figure 1

The fuel tank is used to store fuel for the vehicle. It has a 42 liter (11.1 gallon) fuel capacity. The tank is molded from steel and is located in back of the rear wheels below the rear seat. The tank is held in place with five bolts. The tank's shape allows for a constant supply of fuel around the fuel pump strainer during low fuel conditions and also during aggressive vehicle maneuvers. The fuel inlet port on the tank is equipped with an inlet valve. This fuel tank inlet valve prevents fuel from spewing into the fuel filler neck during aggressive vehicle maneuvers or vehicle rollovers.

The fuel tank along with its pipes and hoses should be checked for road damage which could result in leakage. Also inspect the fuel filler cap for a correct seal and indications of physical damage.

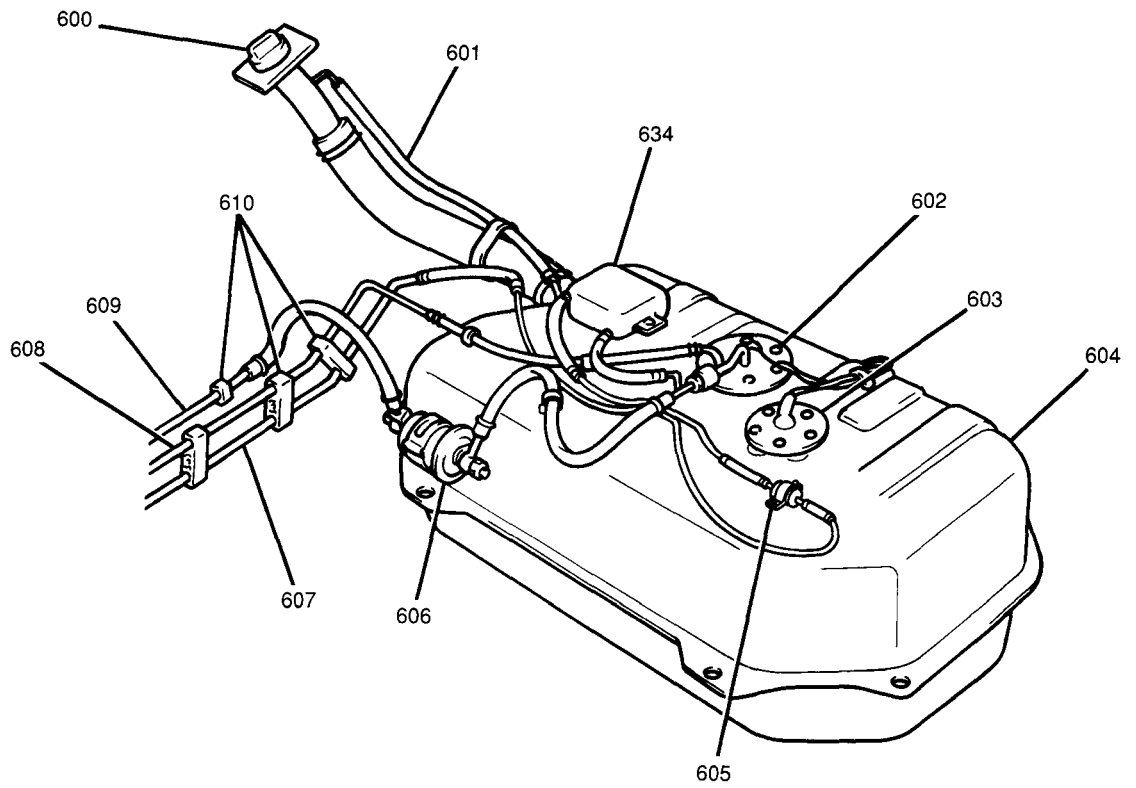

600 FUEL FILLER CAP
601 BREATHER HOSE
602 FUEL PUMP
603 FUEL GAGE SENDING UNIT
604 FUEL TANK
605 TANK PRESSURE CONTROL (TPC) VALVE
606 FUEL FILTER
607 FUEL VAPOR PIPE
608 FUEL RETURN PIPE
609 FUEL FEED PIPE
610 PIPE RETAINING CLAMPS

PC6000-6C-JT-RS

Figure 1 Fuel System

Fuel Tank Filler Neck

To prevent refueling with leaded fuel, the fuel filler neck has a built-in restrictor and deflector. The opening of the restrictor only admits the smaller unleaded fuel nozzle. The nozzle must be fully inserted to bypass the deflector. Any attempt at refueling with leaded fuel will result in fuel splashing out of the filler neck.

Fuel Filler Cap

Figure 2

The fuel filler cap is a pressure-vacuum type. A built-in torque limiting device on the cap prevents overtightening and also eliminates the escape of fuel vapors. To install, turn the cap clockwise until a clicking noise is heard. This indicates that the cap is fully seated.

A vacuum relief valve is incorporated into the fuel filler cap (Figure 2). If the pressure in the fuel tank becomes negative (vacuum), the relief valve opens to release the pressure created within the fuel tank. Only when vacuum becomes excessive within the tank does this occur. Vacuum pressure is also vented through the tank pressure control (TPC) valve which is located on the top of the fuel tank.

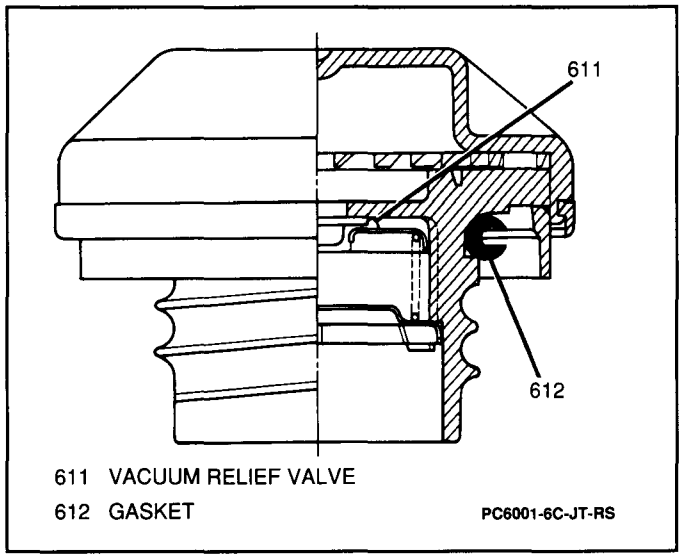

Figure 2 Fuel Filler Cap Cross Section

A pressure relief valve is also located in the fuel filler cap. If the pressure of fuel vapor within the tank should exceed that for which the fuel system is designed, the pressure relief valve opens, and excess pressure is vented to the atmosphere.

NOTICE: If a fuel filler cap is to be replaced, use only a cap with the same features. Failure to use the correct cap can result in incorrect operation of the fuel delivery system.

FUEL GAGE SENDING UNIT

Figure 3

The fuel gage sending unit consists of a float, float arm and a variable resistor (Figure 3). Fuel level is measured by the position of the float in the fuel tank, and is indicated by a gage in the instrument panel cluster assembly. When the fuel level changes, the float position changes. The change in float position increases/decreases the resistance of the variable resistor. The change in resistance causes the position of the fuel gage needle to change.

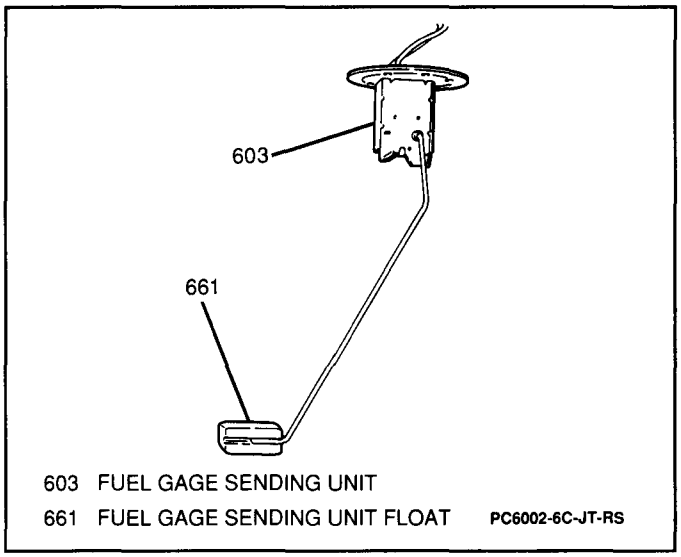

Figure 3 Fuel Gage Sending Unit

FUEL PUMP

Figures 4 and 5

The fuel pump is an electric pump that is controlled by the engine control module (ECM) through the fuel pump relay (Figures 4 and 5). When the ECM commands the fuel pump to operate, an impeller turns with the motor in the pump assembly. This causes fuel within the fuel tank to be drawn into the fuel pump inlet port. Fuel is pumped out to the throttle body and fuel injector under pressure through the fuel feed pipe and hose. The fuel pressure is retained when the fuel pump is not running by means of a pressure control valve located within the pump. Excess fuel is returned to the fuel tank by means of a fuel return pipe and hose.

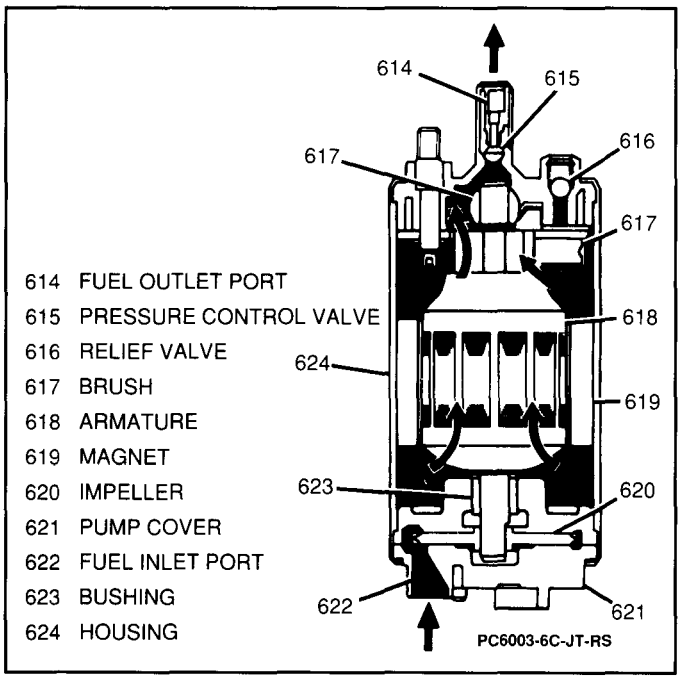

Figure 4 Fuel Pump Cross Section

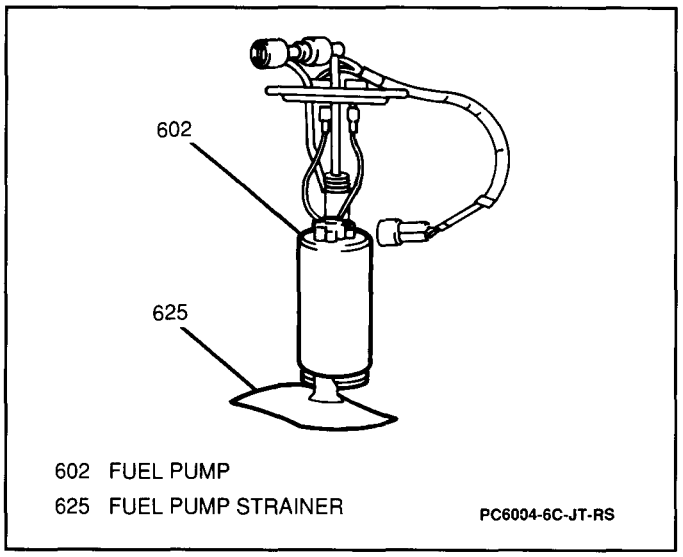

Figure 5 Fuel Pump

FUEL FILTER

Figure 6

A steel in-line fuel filter is used in the fuel feed pipe ahead of the fuel injector. The filter housing is constructed to withstand maximum fuel system pressure, exposure to fuel additives and changes in temperature. The filter element is made of paper and is designed to trap particles in the fuel that may damage the fuel injection system. The fuel filter is located at the right front side of the fuel tank (Figure 6).

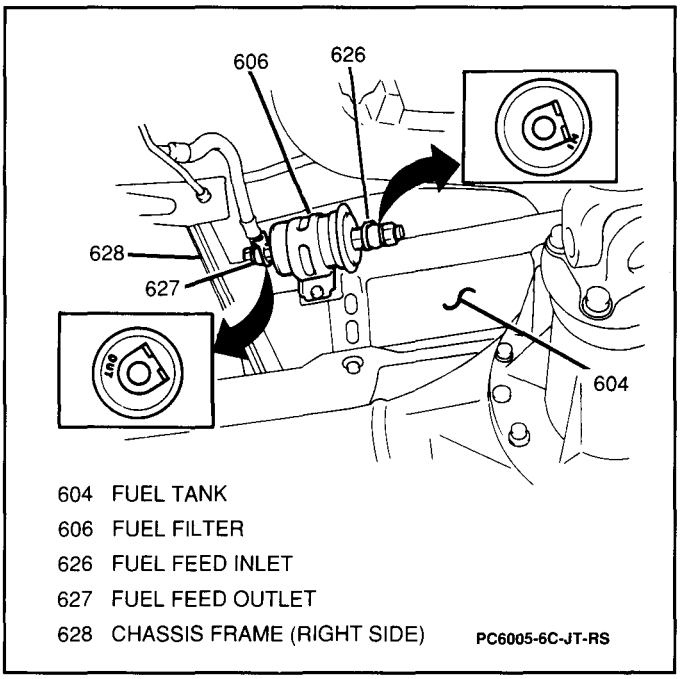

Figure 6 Fuel Filter Location

FUEL FEED AND RETURN PIPES AND HOSES

The fuel feed and return pipes and hoses carry fuel from the fuel tank to the throttle body and back to the fuel tank. These pipes and hoses are attached to the underbody of the vehicle and should be inspected for kinks or dents which may restrict fuel flow.

Fuel Vapor Pipe and Hoses

The fuel vapor pipe and hoses carry fuel vapors from the fuel tank to the evaporative emission canister located in the engine compartment. The fuel vapors are stored in the canister when the engine is not running. When the engine is running at normal operating temperature and the accelerator pedal is depressed, the engine control module (ECM) will command the evaporative emission solenoid purge valve to open and allow the stored fuel vapors to be purged into the intake manifold and absorbed into the combustion process. For a more detailed explanation of the evaporative emission control system, refer to SECTION 6E2-C3.

ACCELERATOR CONTROLS

The accelerator control system is cable-operated. When the accelerator pedal is depressed the cable pulls the throttle lever open (increasing the throttle plate opening), and when the accelerator pedal is released the throttle lever returns to the idle position and the throttle plate opening decreases.

DIAGNOSIS

ALCOHOL-IN-FUEL

Alcohol-in-fuel can be detrimental to fuel system components and may cause driveability problems such as hesitation, lack of power, stall, no start, etc. These conditions may also exist due to fuel system corrosion and subsequent fuel filter plugging, deterioration of rubber components and/or air-fuel mixture leaning.

Various types and concentrations of alcohol are used in commercial fuel. Some alcohol is more detrimental to fuel system components than others. If an excessive amount of alcohol in the fuel is suspected as the cause of a driveability problem, the following procedure may be used to detect its presence. This procedure uses water to extract the alcohol from the fuel, but the specific type of alcohol contamination cannot be determined from this test.

Testing Procedure

The fuel sample should be drawn from the bottom of the fuel tank so that any water present in the tank will be detected. The sample should be bright and clear. If the sample appears to be cloudy or contaminated with water (as indicated by a water layer at the bottom of the sample), this procedure should not used and the fuel system should be cleaned. For fuel system cleaning procedures, refer to "Fuel System Cleaning" later in this section.

1. Using a 100 ml cylinder with 1 ml graduation marks, fill with fuel sample to the 90 ml mark.
2. Add 10 ml of water to bring the total fluid volume to 100 ml and install a stopper.
3. Shake vigorously for 10 to 15 seconds.
4. Carefully loosen the stopper to release pressure.
5. Close the stopper and shake vigorously again for 10 to 15 seconds.
6. Put the graduated cylinder on a level surface for approximately 5 minutes to allow adequate liquid separation.

If alcohol is present in the fuel, the volume of the lower layer (which would now contain both alcohol and water) would be greater than 10 ml.

For instance, if the volume of the lower layer is increased to 15 ml, it will indicate at least 5% alcohol in the fuel. The actual amount of alcohol may be somewhat greater because this procedure does not extract all of the alcohol from the fuel.

FUEL TANK LEAK CHECK

Important

- Place a dry chemical (Class B) fire extinguisher near work area.
- Before removing the fuel tank for a suspected leak, make sure that fuel pipes are not leaking onto the tank. Once removed, make sure that fuel is not leaking around the fuel pump or fuel gage sending unit gaskets.

1. Relieve fuel system pressure. Refer to "Fuel System Pressure Relief" later in this section.
2. Drain fuel tank. Refer to "Draining Fuel Tank" later in this section.
3. Remove fuel tank. Refer to "Fuel Tank Replacement" later in this section.
4. Plug fuel feed hose, fuel return pipe and fuel vapor pipe on the fuel tank.
5. Plug fuel filler neck opening.
6. Connect a piece of hose to the breather hose nipple on the fuel tank; secure with one clamp.
7. Submerge fuel tank in water or apply a soapy solution to the outside of the tank.
8. Apply 7 to 15 kPa (1 to 2 psi) air pressure to the breather hose.
   - Air bubbles appearing from the fuel tank indicate a leak. Replace the fuel tank if it is leaking; refer to "Fuel Tank Replacement" later in this section.

FUEL SYSTEM PRESSURE TEST

For fuel system pressure test procedures, refer to SECTION 6E2.

FUEL GAGE SENDING UNIT DIAGNOSIS

For fuel gage sending unit diagnosis procedures, refer to SECTION 8A.

FUEL PUMP ELECTRICAL DIAGNOSIS

For fuel pump electrical diagnosis procedures, refer to SECTION 6E2.

ON-VEHICLE SERVICE

FUEL SYSTEM PRESSURE RELIEF

Figure 7

CAUTION:

- **To reduce the risk of fire and personal injury, it is necessary to relieve the fuel system pressure before servicing fuel system components.**
- **After relieving fuel system pressure, a small amount of fuel may be released when servicing fuel pipes or connections. In order to reduce the chance of personal injury, cover fuel pipe fittings with a shop towel before disconnecting, to catch any fuel that may leak out. Place the towel in an approved container when disconnect is completed.**

1. Loosen fuel filler cap to relieve fuel tank pressure.
2. Disconnect fuel pump relay electrical connector (Figure 7).

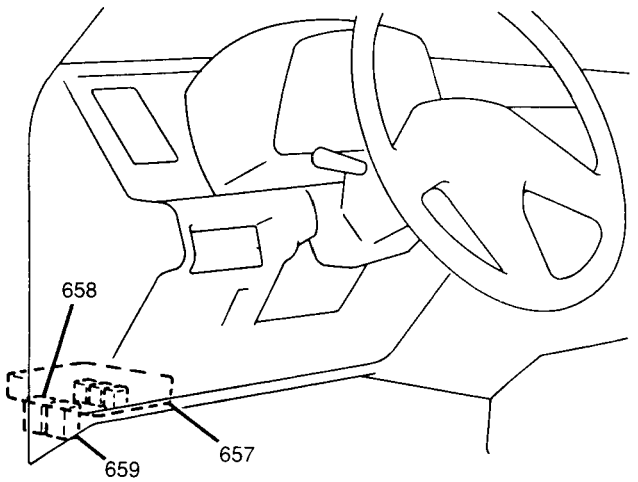

657 ENGINE CONTROL MODULE (ECM)
658 FUEL PUMP RELAY
659 MAIN RELAY
PC6006-6C-JT-RS

Figure 7 Fuel Pump Relay

3. Crank engine and allow to stall. Crank engine for an additional three seconds to assure relief of any remaining fuel pressure.
4. Remove negative (-) battery cable to avoid possible fuel discharge if an attempt is made to start the engine.
5. Reconnect fuel pump relay electrical connector.
6. Tighten fuel filler cap.

FUEL FILTER

Figures 8 and 9

Remove or Disconnect

- Relieve fuel system pressure. Refer to "Fuel System Pressure Relief" earlier in this section.
- Raise and suitably support vehicle. Refer to SECTION 0A.

1. One bolt and fuel feed inlet hose from fuel filter (Figure 8).

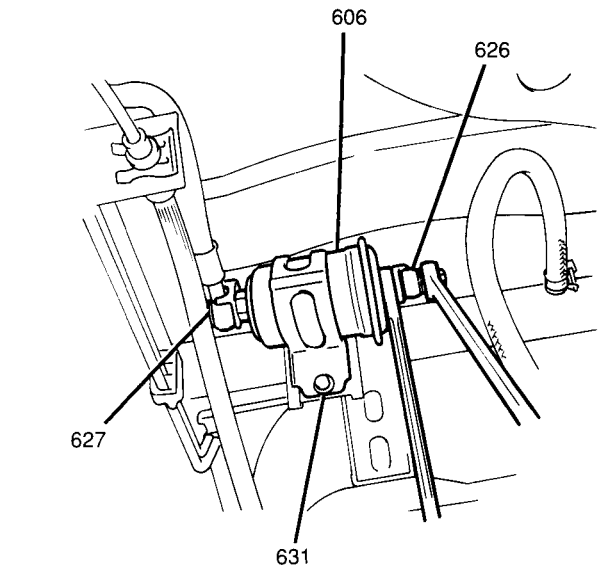

606 FUEL FILTER
626 FUEL FEED INLET
627 FUEL FEED OUTLET
631 FUEL FILTER MOUNTING BRACKET BOLT
PC6007-6C-JT-RS

Figure 8 Removing Fuel Filter

2. One bolt and fuel feed outlet hose from fuel filter (Figure 8).
3. Two bolts and fuel filter mounting bracket from underbody (Figure 8).
4. One bolt and fuel filter from fuel filter mounting bracket.

Install or Connect

1. Fuel filter mounting bracket-to-fuel filter; secure with one bolt.

   Tighten

   - Fuel filter mounting bracket-to-fuel filter bolt to 20 N·m (15 lb.ft.).

2. Fuel filter mounting bracket to underbody; secure with two bolts (Figure 9).

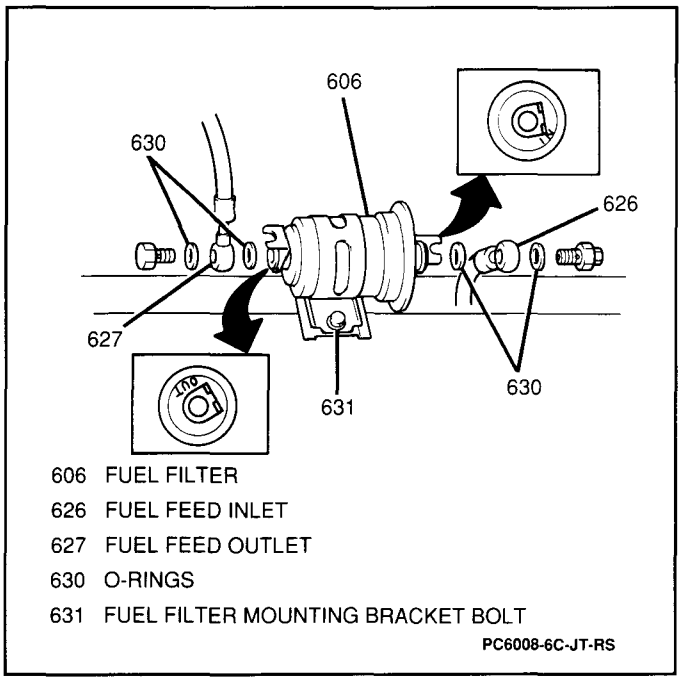

Figure 9 Installing Fuel Filter

Tighten

- Fuel filter mounting bracket bolts to 25 N·m (18 lb.ft.).

3. Fuel feed outlet hose to fuel filter; secure with one bolt (Figure 9).

Tighten

- Fuel feed outlet hose-to-fuel filter bolt to 35 N·m (26 lb.ft.).

4. Fuel feed inlet hose to fuel filter; secure with one bolt (Figure 9).

Tighten

- Fuel feed inlet hose-to-fuel filter bolt to 35 N·m (26 lb.ft.).

- Lower vehicle.

5. Negative (-) battery cable.

Tighten

- Negative (-) battery cable-to-negative (-) battery terminal retainer to 15 N·m (11 lb.ft.).

- Turn ignition switch to "ON" and then back to "LOCK" to pressurize the fuel system. Check for any fuel leaks.

DRAINING FUEL TANK

1. Remove fuel filler cap.
2. Remove one clamp and fuel filler neck hose from fuel tank.
3. Remove fuel tank inlet valve from fuel filler neck hose opening on the fuel tank.
4. Use a hand operated pump device to drain fuel through the fuel filler neck opening on the fuel tank.

CAUTION: Never drain or store fuel in an open container due to the possibility of fire or explosion.

5. Reinstall fuel tank inlet valve to fuel tank.
6. Reinstall fuel filler neck hose to fuel tank; secure with one clamp.
7. Reinstall fuel filler cap.

FUEL TANK REPLACEMENT

Figures 10 through 13

CAUTION: To help avoid personal injury when a vehicle is on a hoist, provide additional support for the vehicle on the opposite end from which components are being removed. This will reduce the possibility of the vehicle falling off the hoist.

Remove or Disconnect

- Relieve fuel system pressure. Refer to "Fuel System Pressure Relief" earlier in this section.
- Drain fuel tank. Refer to "Draining Fuel Tank" earlier in this section.
- Raise and suitably support vehicle. Refer to SECTION 0A.

1. Four bolts and rear crossmember from underbody.
2. Fuel gage sending unit and fuel pump electrical connectors (Figure 10).

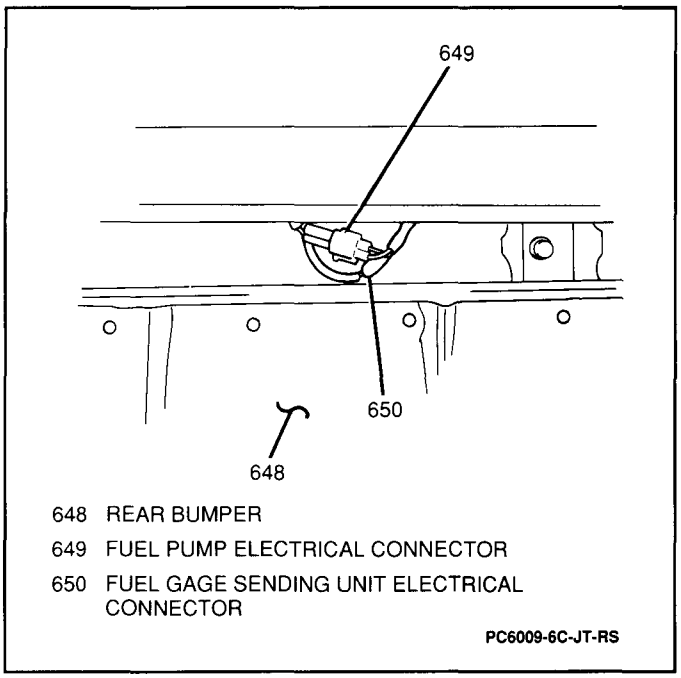

Figure 10 Fuel Gage Sending Unit and Fuel Pump Electrical Connectors

3. One bolt and fuel feed inlet hose from fuel filter.
4. One clamp and fuel breather hose from fuel tank (Figure 11).

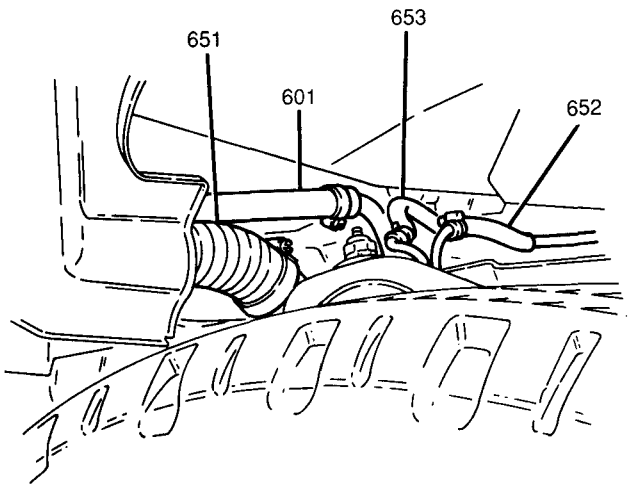

601 BREATHER HOSE
651 FUEL FILLER NECK HOSE
652 FUEL RETURN HOSE
653 FUEL VAPOR HOSE PC6010-6C-JT-RS

Figure 11 Fuel Tank Pipe and Hose Connections

5. One clamp and fuel filler neck from fuel tank (Figure 11).
6. One clamp and fuel return hose from fuel return pipe (Figure 11).
7. One clamp and fuel vapor hose from fuel vapor pipe (Figure 11).
8. Five bolts and fuel tank protector and fuel tank from vehicle (Figure 12).

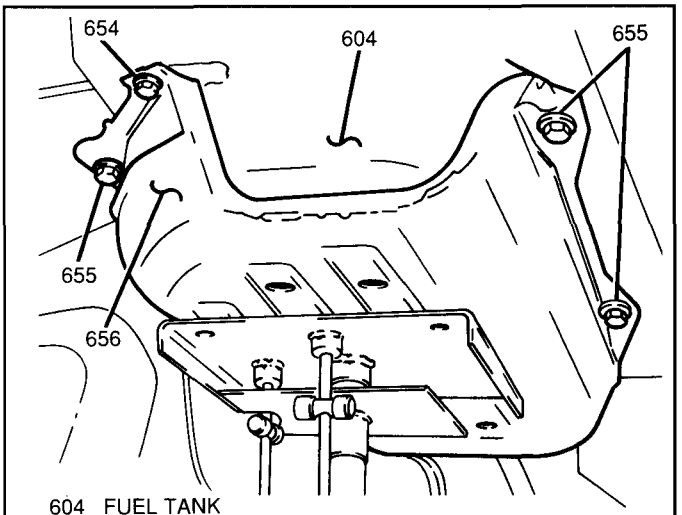

604 FUEL TANK
654 FUEL TANK PROTECTOR-TO-FUEL TANK BOLT
655 FUEL TANK PROTECTOR AND FUEL TANK MOUNTING BOLTS
656 FUEL TANK PROTECTOR PC6011-6C-JT-RS

Figure 12 Removing Fuel Tank

- Support fuel tank while lowering from vehicle.

Disassemble

1. One bolt and fuel tank protector from fuel tank.
2. Five screws and fuel gage sending unit from tank.
3. Six screws and fuel pump from fuel tank.
4. Two clamps, two screws and tank pressure control (TPC) valve and hoses from fuel tank.
5. Two clamps, two screws and fuel vapor separator and hoses from fuel tank.
6. Fuel tank inlet valve from fuel tank.

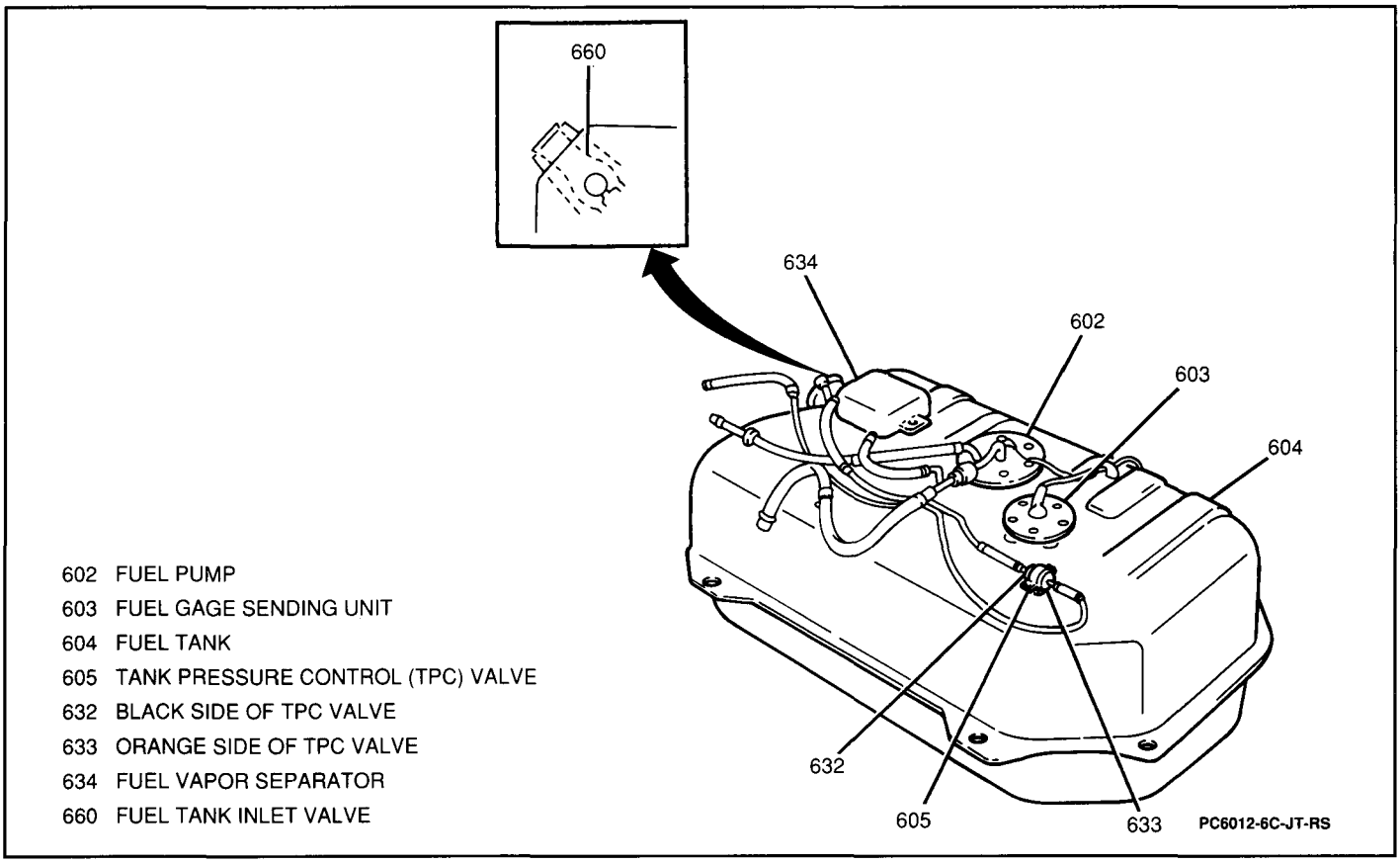

Figure 13 Fuel Tank Disassembly

Assemble

1. Fuel tank inlet valve to fuel tank.
2. Fuel vapor separator and hoses to fuel tank; secure with two screws and two clamps.
3. TPC valve and hoses to fuel tank; secure with two screws and two clamps.
4. Fuel pump to fuel tank; secure with six screws.
5. Fuel gage sending unit to fuel tank; secure with five screws.
6. Fuel tank protector to fuel tank; secure with one bolt.

Tighten

- Fuel tank protector-to-fuel tank bolt to 25 N·m (18 lb.ft.).

Install or Connect

- Raise and support fuel tank protector and fuel tank.

1. Fuel tank protector and fuel tank to underbody; secure with five bolts.

Tighten

- Fuel tank protector and fuel tank mounting bolts to 35 N·m (26 lb.ft.).

2. Fuel vapor hose to fuel vapor pipe; secure with one clamp.
3. Fuel return hose to fuel return pipe; secure with one clamp.
4. Fuel filler neck to fuel tank; secure with one clamp.
5. Fuel breather hose to fuel tank; secure with one clamp.
6. Fuel feed inlet hose to fuel filter; secure with one bolt.

Tighten

- Fuel feed inlet hose-to-fuel filter bolt to 35 N·m (26 lb.ft.).

7. Fuel pump electrical connectors and fuel gage sending unit.
8. Rear crossmember to underbody; secure with four bolts.

Tighten

- Rear crossmember bolts to 70 N·m (51 lb.ft.).

- Lower vehicle.
- Refill fuel tank.

9. Negative (-) battery cable.

Tighten

- Negative (-) battery cable-to-negative (-) battery terminal retainer to 15 N·m (11 lb.ft.).

- Turn ignition switch to "ON" and then back to "LOCK" to pressurize the fuel system. Check for any fuel leaks.

FUEL GAGE SENDING UNIT REPLACEMENT

Figure 14

Remove or Disconnect

1. Fuel tank from vehicle. Refer to "Fuel Tank Replacement" earlier in this section.
2. Five screws and fuel gage sending unit from fuel tank (Figure 14).

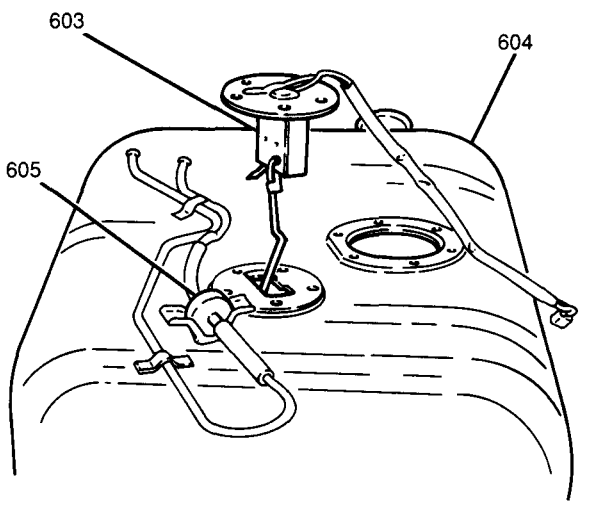

603 FUEL GAGE SENDING UNIT
604 FUEL TANK
605 TANK PRESSURE CONTROL (TPC) VALVE
PC6013-6C-JT-RS

Figure 14 Removing Fuel Gage Sending Unit

Install or Connect

1. Fuel gage sending unit to fuel tank; secure with five screws.
2. Fuel tank to vehicle. Refer to "Fuel Tank Replacement" earlier in this section.

FUEL PUMP REPLACEMENT

Figure 15

Remove or Disconnect

1. Fuel tank from vehicle. Refer to "Fuel Tank Replacement" earlier in this section.
2. One clamp and fuel return hose from fuel pump (Figure 15).

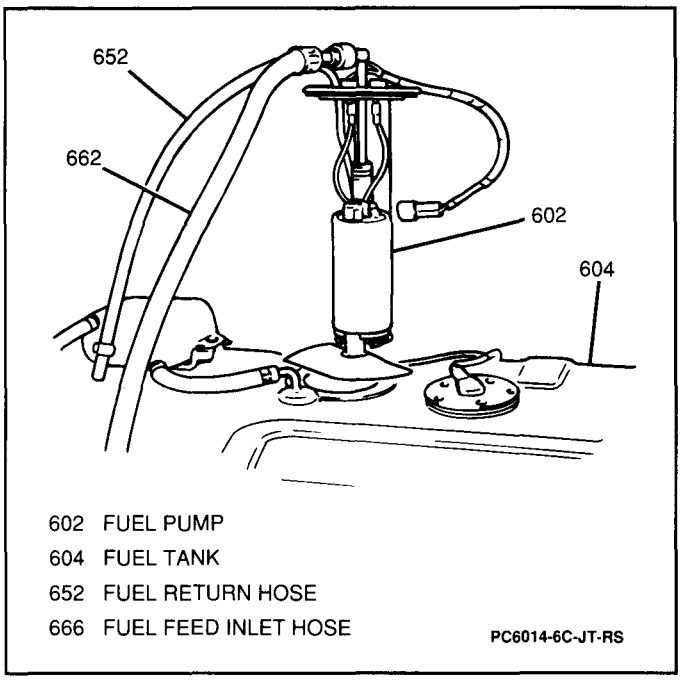

602 FUEL PUMP
604 FUEL TANK
652 FUEL RETURN HOSE
666 FUEL FEED INLET HOSE
PC6014-6C-JT-RS

Figure 15 Removing Fuel Pump

3. One bolt and fuel feed inlet hose from fuel pump (Figure 15).
4. Six screws and fuel pump from fuel tank (Figure 15).

Install or Connect

1. Fuel pump to fuel tank; secure with six screws.
2. Fuel feed inlet hose to fuel pump; secure with one bolt.

Tighten

- Fuel pump-to-fuel feed inlet hose bolt to 45 N·m (33 lb.ft.).

3. Fuel return hose to fuel pump; secure with one clamp.
4. Fuel tank to vehicle. Refer to "Fuel Tank Replacement" earlier in this section.

FUEL SYSTEM CLEANING

Figure 13

If a fuel system problem is due to contaminated fuel or foreign material in the fuel tank, the tank must be cleaned. If the tank is rusted or is still contaminated after cleaning, the tank must be replaced.

Remove or Disconnect

1. Fuel tank from vehicle. Refer to "Fuel Tank Replacement" earlier in this section.
2. One bolt and fuel tank protector from fuel tank.
3. Five screws and fuel gage sending unit from fuel tank.
4. Six screws and fuel pump from fuel tank.
5. Two clamps, two screws and tank pressure control (TPC) valve from fuel tank.
6. Two clamps, two screws and fuel vapor separator from fuel tank.
7. Fuel tank inlet valve from fuel tank.

Clean

1. Fuel tank by filling with hot water and shaking vigorously for five minutes.
2. Fuel tank by draining it. Make sure that all of the water is removed from the fuel tank.

Important

- If the inside of the fuel tank contains any traces of rust after cleaning, replace the tank.

Install or Connect

1. Fuel tank inlet valve to fuel tank.
2. Fuel vapor separator and hoses to fuel tank; secure with two screws and two clamps.
3. TPC valve and hoses to fuel tank; secure with two screws and two clamps.
4. Fuel pump to fuel tank; secure with six screws.
5. Fuel gage sending unit to fuel tank; secure with five screws.
6. Fuel tank protector to fuel tank; secure with one bolt.

Tighten

- Fuel tank protector-to-fuel tank bolt to 25 N·m (18 lb.ft.).

7. Fuel tank to vehicle. Refer to "Fuel Tank Replacement" earlier in this section.

FUEL FEED, RETURN AND VAPOR PIPES AND HOSES REPAIR/REPLACEMENT

Figures 16 through 18

Remove or Disconnect

- Relieve fuel system pressure. Refer to "Fuel System Pressure Relief" earlier in this section.
- Raise and suitably support vehicle. Refer to SECTION 0A.

1. One clamp and fuel return hose from fuel return pipe by fuel tank (Figure 16).

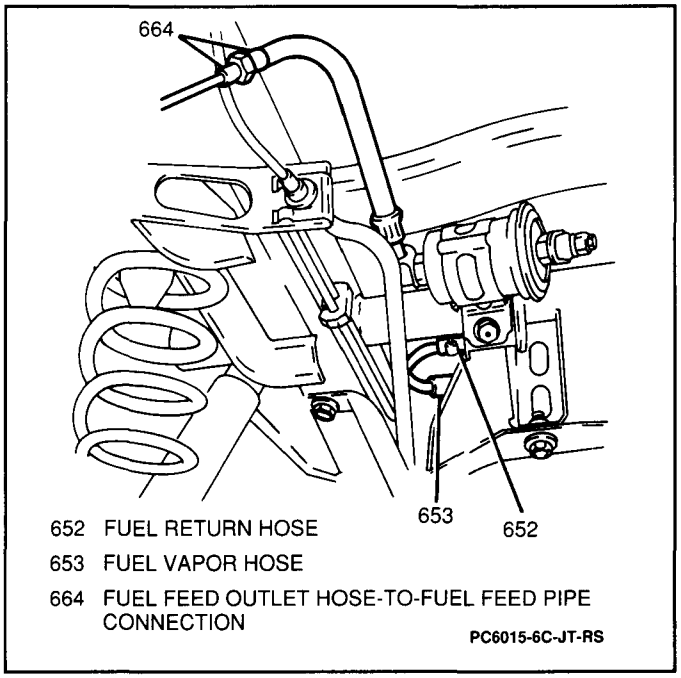

Figure 16 Fuel Tank Fuel Pipe and Hose Connections

2. One bolt and fuel feed outlet hose from fuel feed pipe by fuel tank (Figure 16).
3. One clamp and fuel vapor hose from fuel vapor pipe by fuel tank (Figure 16).
4. One bolt and fuel feed hose from fuel feed pipe in engine compartment (Figure 17).

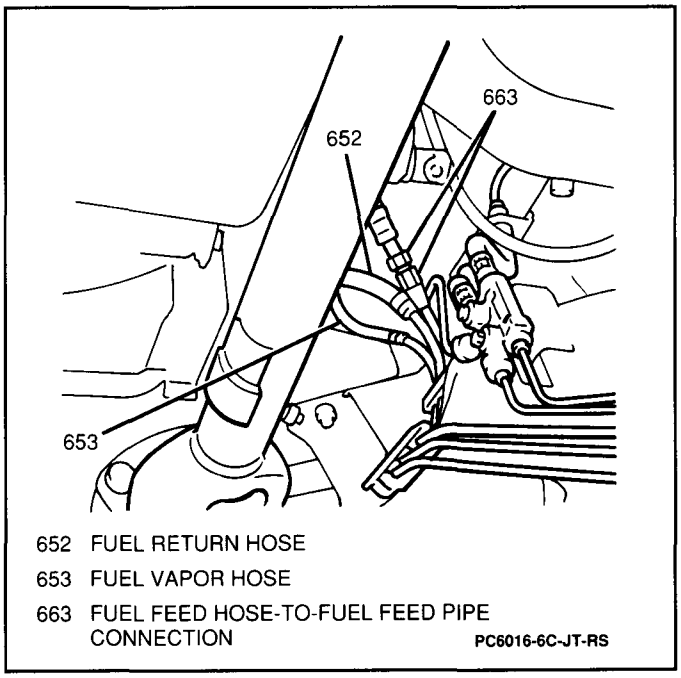

Figure 17 Engine Compartment Fuel Pipe and Hose Connections

5. One clamp and fuel return hose from fuel return pipe in engine compartment (Figure 17).
6. One clamp and fuel vapor hose from fuel vapor pipe in engine compartment (Figure 17).
7. Ten pipe retaining clamps and fuel pipes from underbody (Figure 18).

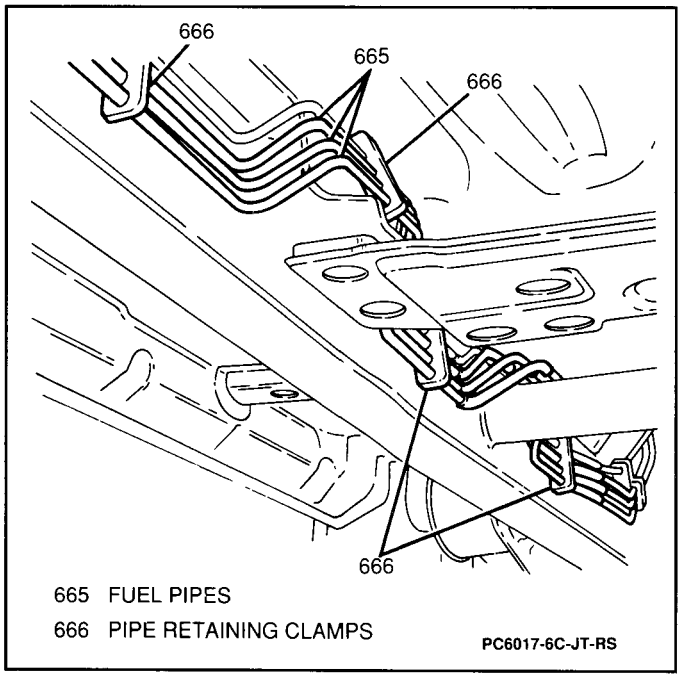

Figure 18 Fuel Pipes and Pipe Retaining Clamps

Install or Connect

1. Fuel pipes to underbody; secure with ten pipe retaining clamps.
2. Fuel vapor hose to fuel vapor pipe in engine compartment; secure with one clamp.
3. Fuel return hose to fuel return pipe in engine compartment; secure with one clamp.
4. Fuel feed hose to fuel feed pipe in engine compartment; secure with one bolt.

Tighten

- Fuel feed hose-to-fuel feed pipe bolt to 45 N·m (33 lb.ft.).

5. Fuel vapor hose to fuel vapor pipe by fuel tank; secure with one clamp.
6. Fuel feed outlet hose to fuel feed pipe by fuel tank; secure with one bolt.

Tighten

- Fuel feed outlet hose-to-fuel feed pipe bolt to 45 N·m (33 lb.ft.).

7. Fuel return hose to fuel return pipe by fuel tank; secure with one clamp.
- Lower vehicle.
8. Negative (-) battery cable.

Tighten

- Negative (-) battery cable-to-negative (-) battery terminal retainer to 15 N·m (11 lb.ft.).

- Turn ignition switch to "ON" and then back to "LOCK" to pressurize the fuel system. Check for any fuel leaks.

ACCELERATOR CONTROL CABLE REPLACEMENT

Figure 19

Remove or Disconnect

1. Accelerator control cable from accelerator pedal.
- Push accelerator control cable through bulkhead grommet.
2. Accelerator control cable from throttle lever by loosening cable locknut and adjusting nut (Figure 19).

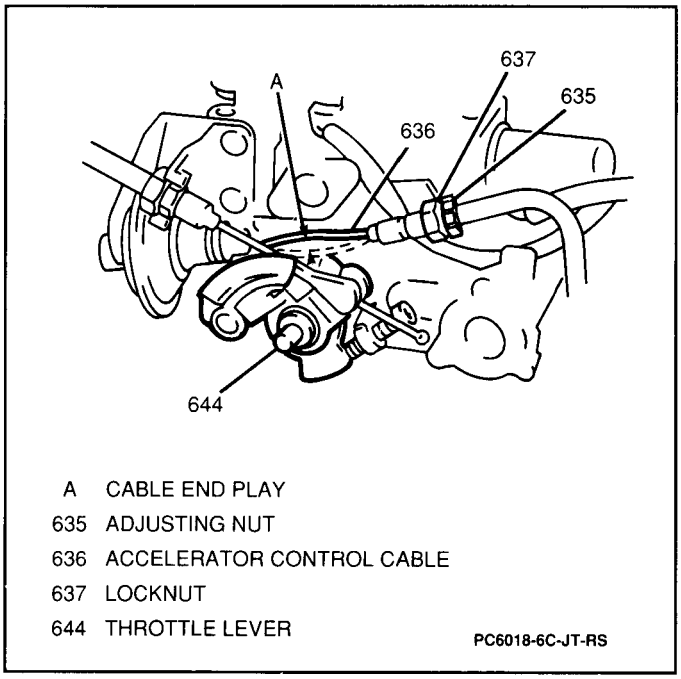

Figure 19 Accelerator Control Cable

3. Accelerator control cable from vehicle.

Install or Connect

1. Accelerator control cable to throttle lever; secure with cable locknut and adjusting nut. Do not tighten fully.
- Push accelerator control cable through bulkhead grommet.
2. Accelerator control cable to accelerator pedal.
- Adjust accelerator control cable. Refer to "Accelerator Control Cable Adjustment" later in this section.

ACCELERATOR CONTROL CABLE ADJUSTMENT

Figure 19

Inspect

- Accelerator control cable end play (Figure 19). If the cable end play is not 10 to 15 mm (0.4 to 0.6-inch), loosen the adjusting nut and the cable locknut at the throttle body injection (TBI) unit.

Adjust

- Accelerator control cable end play until it is within specification. Be sure to tighten cable locknut and adjusting nut after adjustment is complete.

Tighten

- Accelerator cable locknut and adjusting nut to 25 N·m (18 lb.ft.).

ACCELERATOR PEDAL REPLACEMENT

Figure 20

Remove or Disconnect

1. Accelerator control cable from accelerator pedal.
2. Accelerator pedal push nut and accelerator pedal from mounting bracket (Figure 20).

Install or Connect

1. Accelerator pedal to mounting bracket; secure with a new accelerator pedal push nut.
   - Be sure to install spring while sliding accelerator pedal into mounting bracket.
2. Accelerator control cable to accelerator pedal.

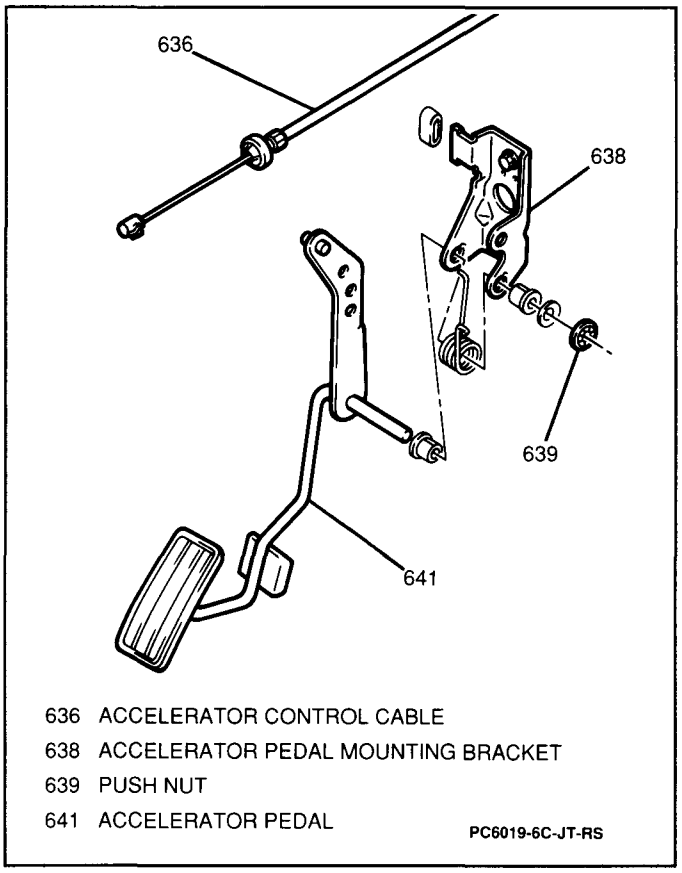

Figure 20 Accelerator Pedal

SPECIFICATIONS

TORQUE SPECIFICATIONS

Fuel Filter Mounting Bracket-to-Fuel Filter Bolt	20 N·m (15 lb.ft.)
Fuel Filter Mounting Bracket Bolts	25 N·m (18 lb.ft.)
Fuel Feed Outlet Hose-to-Fuel Filter Bolt	35 N·m (26 lb.ft.)
Fuel Feed Inlet Hose-to-Fuel Filter Bolt	35 N·m (26 lb.ft.)
Negative (-) Battery Cable-to-Negative (-) Battery Terminal Retainer	15 N·m (11 lb.ft.)
Fuel Tank Protector-to Fuel Tank Bolt	25 N·m (18 lb.ft.)
Fuel Tank Protector and Fuel Tank Mounting Bolts	35 N·m (26 lb.ft.)
Rear Crossmember Bolts	70 N·m (51 lb.ft.)
Fuel Pump-to-Fuel Feed Inlet Hose Bolt	45 N·m (33 lb.ft.)
Fuel Feed Outlet Hose-to-Fuel Feed Pipe Bolt	45 N·m (33 lb.ft.)
Accelerator Cable Locknut and Adjusting Nut	25 N·m (18 lb.ft.)

FUEL SPECIFICATIONS

The fuel must meet ASTM Standard: D4814 (U.S.), CGSB 3.5-M87 (Canada).

Octane Requirements

Minimum octane recommended: 87{(R+M)/2} octane where R = research octane number and M = motor octane number.

Gasoline with Alcohol

NOTICE: Do not spill fuel containing alcohol on the vehicle. Alcohol can cause damage to the paint finish and trim.

Methyl Tertiary-butyl Ether (MTBE)

Fuel containing Methyl Tertiary-butyl Ether (MTBE) may be used, providing that there is no more than 15% MTBE by volume.

Ethanol

Fuel containing ethanol (ethyl) or grain alcohol may be used, providing that there is no more than 10% ethanol alcohol by volume.

Methanol

Fuel containing methanol (methyl) or wood alcohol may be used, providing that there is no more than 5% methanol by volume.

NOTICE: Do not use fuel that contains more than 5% methanol. Use of a fuel (gasohol) that contains more than 5% of methanol can corrode metal fuel system components and damage plastic and rubber parts.

SERVICE PARTS INFORMATION

Component Name Used in Section 6C	Reference Name in Service Parts Catalog	Group Number
Accelerator Control Cable	Cable, Accel Cont	3.430
Accelerator Pedal	Pedal, Accel (W/Lvr)	3.451
Fuel Breather Hose	Hose, F/Tank Vent (#1)	3.120
Fuel Feed Hose (Throttle Body)	Hose, Fuel Reg	3.163
Fuel Feed Inlet Hose	Hose, Pipe to Filler	3.163
Fuel Feed Outlet Hose	Hose, Filter to Pipe	3.163
Fuel Feed Pipe	Pipe, Fuel	3.163
Fuel Filler Cap	Cap, Fuel Tank	3.028
Fuel Filler Neck Hose	Hose, Fuel Tank Filler	3.003
Fuel Filler Neck	Neck Fuel Tank Filler	3.003
Fuel Filter	Filter, Fuel (In Line)	3.890
Fuel Gage Sending Unit	Gage, Fuel (At Tank)	3.108
Fuel Pump	Pump, Fuel	3.900
Fuel Pump Relay	Relay, Fuel Pump	3.900
Fuel Pump Strainer	Filter, F/Pump (In Tank)	3.900
Fuel Return Hose (Fuel Tank)	Hose, Pipe to Pipe	3.163
Fuel Return Hose (Throttle Body)	Hose, Fuel Rtn (To Pipe)	3.163
Fuel Return Pipe	Pipe, Fuel Return	3.163
Fuel Tank	Tank, Fuel	3.001
Fuel Tank Protector	Shield, Fuel Tank Protector	3.015
Fuel Vapor Hose (Fuel Tank)	Hose, F/Tank Vent	3.120
Fuel Vapor Hose (Throttle Body)	Hose, Fuel VPR CNSTR INLT	3.145
Fuel Vapor Pipe	Pipe, Fuel Evaporator Main	3.120
Fuel Vapor Separator	Separator, Fuel and Vapor	3.120
Tank Pressure Control (TPC) Valve	Valve, 2-Way Check	3.130

SECTION 6D

ENGINE ELECTRICAL

CONTENTS

General Description of Section 6D 6D-1
Section 6D1 — Battery 6D-1
Section 6D2 — Cranking System 6D-1
Section 6D3 — Charging System 6D-1
Section 6D4 — Ignition System 6D-1
Section 6D5 — Engine Wiring 6D-1

GENERAL DESCRIPTION OF SECTION 6D

The engine electrical systems includes the battery, ignition (primary and secondary), starter motor (and related wiring) and the generator (and related wiring).

Important

- Where a driveability complaint exists, or an ECM code is set, refer to SECTION 6E. Wiring diagrams, component locations and system checks are located in SECTION 8A.
- When a fault is traced to a particular component, refer to that component's section of the service manual.

SECTION 6D1 — BATTERY

This section contains information on the maintenance, diagnosis, storage, charging and jump starting of automotive batteries. Battery cable and ground strap routing also appear in this section.

SECTION 6D2 — CRANKING SYSTEM

This section contains information on the maintenance, diagnosis, service and specifications of the cranking circuit and starter motor.

SECTION 6D3 — CHARGING SYSTEM

This section contains information on the maintenance, diagnosis, service and specifications of the charging circuit and generator. Generator drive belt routing and tension also appears in this section.

SECTION 6D4 — IGNITION SYSTEM

This section contains information on the maintenance, diagnosis, service and specifications of the spark plugs, distributor and related components. Ignition timing is covered in SECTION 6E2.

SECTION 6D5 — ENGINE WIRING

Engine wiring views are shown in this section. Refer to SECTION 8A for all other electrical wiring views. Engine electrical schematics are found in SECTION 6E2 and SECTION 8A.

SECTION 6D1

BATTERY

CAUTION: Before removing or installing any electrical unit or when a tool or equipment could easily come in contact with the "live" exposed electrical terminals, disconnect the negative (-) battery cable to help prevent personal injury and/or damage to the vehicle or components. Unless instructed otherwise, the ignition switch must be in the "OFF" or "LOCK" position.

NOTICE: When fasteners are removed, always reinstall them at the same location from which they were removed. If a fastener needs to be replaced, use the correct part number fastener for that application. If the correct part number fastener is not available, a fastener of equal size and strength (or stronger) may be used. Fasteners that are not reused, and those requiring thread-locking compound, will be called out. The correct torque values must be used when installing fasteners that require them. If the above procedures are not followed, parts or system damage could result.

CONTENTS

General Description 6D1-1
Battery 6D1-1
Battery Ratings 6D1-2
Reserve Capacity 6D1-2
Cold Cranking Amperage 6D1-2
Common Causes of Battery Failure 6D1-2
Electrolyte Freezing 6D1-3
Carrier and Hold Down 6D1-3
Battery Protection During Vehicle Storage 6D1-3
Built-In Hydrometer 6D1-3
Diagnosis 6D1-4
Battery Testing 6D1-4
Battery Electrical Drain 6D1-5
Parasitic Load Test 6D1-5
On-Vehicle Service 6D1-6
Battery Charging 6D1-6
Charging Procedure 6D1-7
Charging Time Required 6D1-7
Charging a Very Low or Completely Discharged Battery 6D1-8
Jump Starting in Case of Emergency with Auxiliary (Booster) Battery 6D1-8
Battery Replacement 6D1-10
Battery Carrier and Hold Down Brackets 6D1-10
Battery Cable Replacement and Routing 6D1-10
Negative (-) Battery Cable 6D1-10
Positive (+) Battery Cable 6D1-11
Ground Straps 6D1-12
Specifications 6D1-12
Fastener Torques 6D1-12
Service Parts Information 6D1-12
Battery Usage Chart 6D1-13
Special Tools 6D1-13

GENERAL DESCRIPTION

BATTERY

Figures 1 and 2

The sealed battery is standard on all Geo Tracker models. The battery is completely sealed except for two small vent holes located on the side of the battery (Figure 1). These vent holes allow the small amount of gas produced in the battery to escape.

The battery has three major functions in the electrical system: first, it provides a source of energy for cranking the engine; second, it acts as a voltage stabilizer for the electrical system; and third, it can, for a limited time, provide energy when the electrical load exceeds the output of the generator.

The battery specifications label contains information pertinent to the servicing of the battery, such as test ratings, recommended battery replacement part numbers and service precautions (Figure 2). Refer to "Battery Usage Chart" later in this section for additional information on battery use and original equipment replacement parts.

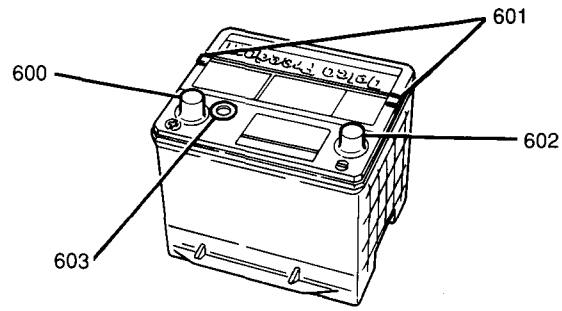

600 POSITIVE (+) BATTERY TERMINAL
601 VENT HOLES
602 NEGATIVE (–) BATTERY TERMINAL
603 BUILT-IN HYDROMETER

PC6101-6D1-M-RS

Figure 1 Sealed Battery

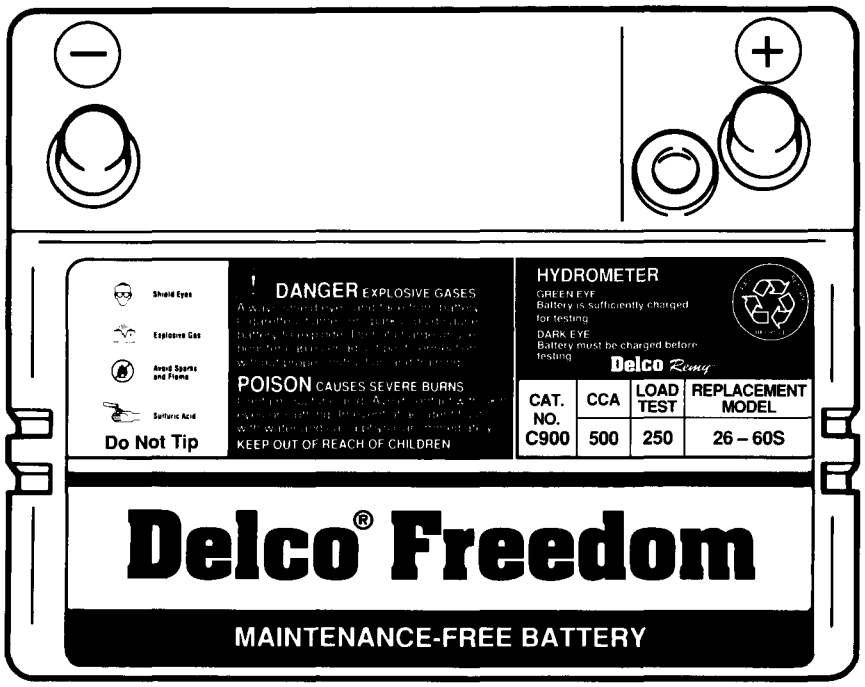

PC6100-6D1-JT-RS

Figure 2 Battery Specifications Label

BATTERY RATINGS

A battery has two ratings: a reserve capacity rating at 27°C (80°F) which is an estimate of the time a fully charged battery will operate the vehicle with no generator operation; and a cold rating at -18°C (0°F) which indicates the cranking load capacity. Refer to "Battery Testing" later in this section for reserve capacity and cold cranking amperage tests.

Reserve Capacity

The reserve capacity is the maximum length of time (expressed in minutes) required for a fully charged battery to discharge to a terminal voltage of 10.5 volts-direct current (VDC). All batteries are rated at a constant temperature of 27°C (80°F) and a constant current drain of 25 amperes. This current drain is about the same as operating a vehicle with the headlamps on with other minimal electrical loading (radio, etc.) and no generator output. The reserve capacity for the battery in this vehicle is 75 minutes.

Cold Cranking Amperage

The cold cranking amperage rating is the minimum amperage which must be maintained by the battery for 30 seconds while meeting a minimum voltage requirement of 7.2 VDC. All batteries are tested at -18°C (0°F). The cold cranking capacity of the battery in this vehicle is 500 amperes.

COMMON CAUSES OF BATTERY FAILURE

The battery is not designed to last indefinitely; however, with proper care, it will provide many years of service. If the battery performs satisfactorily during testing but fails to operate properly for no apparent reason, the following are some of the more important factors that may be the cause of the problem:

1. Vehicle accessories left on overnight or for an extended period of time without the generator operating.
2. Slow average driving speeds for short time periods.
3. The vehicle's electrical load is greater than the generator output, particularly with the addition of aftermarket electrical accessories.
4. Conditions in the charging system such as electrical shorts, slipping drive belt, faulty generator or voltage regulator. Refer to SECTION 6D3 and SECTION 8A for generator and charging system diagnosis.
5. Battery neglect and/or abuse, such as a loose battery retainer and hold down brackets or failure to maintain clean and tight battery connections.
6. Extended vehicle storage without proper battery protection. Refer to "Battery Protection During Vehicle Storage" later in this section for proper storage procedures.
7. New batteries received without proper charge.

8. Extended engine cranking due to poor engine mechanical conditions. Refer to SECTION 6 and SECTION 6A1 for engine diagnosis and repair procedures.
9. Incorrect interpretation of the built-in hydrometer. Refer to "Built-In Hydrometer" later in this section for proper hydrometer interpretation information.
10. Continued current draw on the battery through increased parasitic load. Refer to "Battery Electrical Drain" later in this section for parasitic load test procedures.
11. Mechanical conditions in the electrical system, such as shorted or pinched wires.

ELECTROLYTE FREEZING

The freezing point of electrolyte depends on its specific gravity. Since specific gravity depends on the state of charge, the battery should be protected against freezing by keeping it in a charged condition. If the electrolyte is frozen, the battery will need to be replaced.

CARRIER AND HOLD DOWN

The battery carrier and hold down bracket should be clean and free from corrosion before battery installation. The carrier should be in good condition with a minimal amount of corrosion so that it will hold the battery securely and keep it level.

Important

- Make certain that there are no parts or tools in the battery carrier before installing the battery.

To prevent the battery from shaking in its carrier, the hold down bracket nuts must be tightened to specification. Refer to "Battery Replacement" later in this section for proper battery, carrier and hold down bracket service.

BATTERY PROTECTION DURING VEHICLE STORAGE

The electrical devices (ECM, radio, etc.) used on the Geo Tracker cause a very small but continuous current drain on the battery. This condition is referred to as parasitic load drain. Vehicles that are not used for an extended period of time may develop extremely discharged and/or permanently damaged batteries resulting from parasitic load drain. To prevent parasitic load drain, follow the procedure outlined below:

1. For long term storage (six months or longer), the negative (-) battery cable should be disconnected.
2. For short term storage, the "TAIL DOME" and "CIGAR RADIO" fuses should be removed. This will deactivate the ECM and the radio memories.
3. Batteries should be recharged periodically (every 20 to 45 days) until the green dot is visible in the built-in hydrometer. Refer to "Battery Charging" later in this section for proper charging procedures.

Once the vehicle is returned to service, the radio station presets and the clock will have to be reset; refer to SECTION 9A.

BUILT-IN HYDROMETER

Figures 1 and 3

On the top of the battery is a built-in temperature compensated hydrometer (Figure 1). This hydrometer should be referred to during all diagnostic procedures involving the battery. When observing the hydrometer, make sure that the battery has a clean top. A light may be required in poorly lit areas.

Under normal operation, two indications can be observed (Figure 3):

1. GREEN DOT VISIBLE
   - Any green appearance should be interpreted as a "green dot." The green dot denotes that the battery is ready for testing.
2. DARK: GREEN DOT NOT VISIBLE
   - If there is no green visible in the hydrometer, the battery needs to be charged before testing; refer to "Battery Charging" later in this section. The charging and electrical systems should also be checked. Refer to SECTION 6D3 for charging system diagnosis and refer to SECTION 8A for general electrical system diagnosis.

Occasionally, a third condition may appear (Figure 3):

3. CLEAR OR LIGHT YELLOW
   - If the hydrometer appears clear or has a light yellow color, it indicates that the electrolyte fluid is below the bottom of the hydrometer and is too low for diagnosis. This may have been caused by excessive or prolonged charging, a broken case, excessive tipping or normal battery wearout. When a hydrometer is displaying either of these conditions the battery should be replaced (it cannot be charged); refer to "Battery Replacement" later in this section. The charging and electrical systems should also be checked. Refer to SECTION 6D3 for charging system diagnosis and refer to SECTION 8A for general electrical system diagnosis.

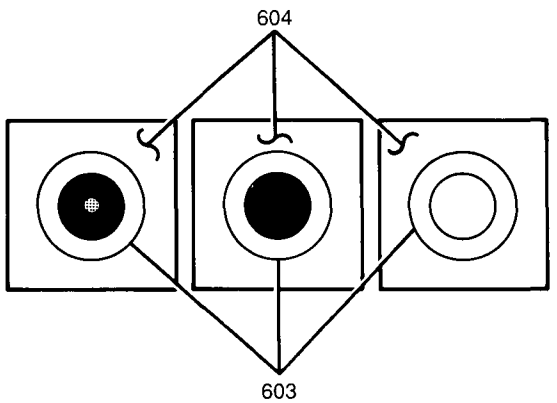

A GREEN DOT VISIBLE – BATTERY READY FOR TESTING
B DARK INDICATOR – BATTERY NEEDS TO BE CHARGED
C CLEAR OR LIGHT YELLOW INDICATOR – REPLACE BATTERY (DO NOT CHARGE)
603 BUILT-IN HYDROMETER
604 BATTERY TOP

PC6103-6D1-M-RS

Figure 3 Built-In Hydrometer Indications

DIAGNOSIS

BATTERY TESTING

Figures 1, 3, 4 and 5

1. VISUAL INSPECTION — Check battery for obvious damage, such as a cracked or broken case or cover, that could permit loss of electrolyte.
   - If obvious damage is noted; replace the battery, determine the cause of damage and correct as necessary.
   - If no damage is noted, proceed to Step 2.
2. HYDROMETER CHECK — Check the state of the built-in hydrometer (Figure 1).
   - If a green dot is visible (Figure 3), proceed to Step 3.
   - If the hydrometer is dark (no green dot visible — Figure 3), charge the battery and proceed to Step 3. Refer to "Battery Charging" later in this section.
   - If the hydrometer is clear or has a light yellow color (Figure 3), the battery must be replaced. Refer to "Built-In Hydrometer" earlier in this section for additional details.
3. LOAD TEST

CAUTION: Wear a safety face shield when load testing a battery to prevent possible personal injury.

Important

- Do not load test a frozen battery.

Tool Required:
J 39200 Digital Multimeter

A. Connect a J 39200 and a battery load tester across the battery terminals (Figure 4).
B. Apply a 300 ampere load for 15 seconds to remove the surface charge from the battery.
C. Remove the load and wait 15 seconds to let the battery recover.
D. Apply 250 amperes to the battery.

Measure

- Battery voltage after 15 seconds.

E. Remove the load.
F. If the voltage does not drop below the minimum voltage listed in Figure 5, the battery is good and should be returned to service. (The battery temperature must be estimated by feel and by the temperature the battery had been exposed to for the preceding few hours.)
G. If the voltage drops below the minimum listed in Figure 5, replace the battery.

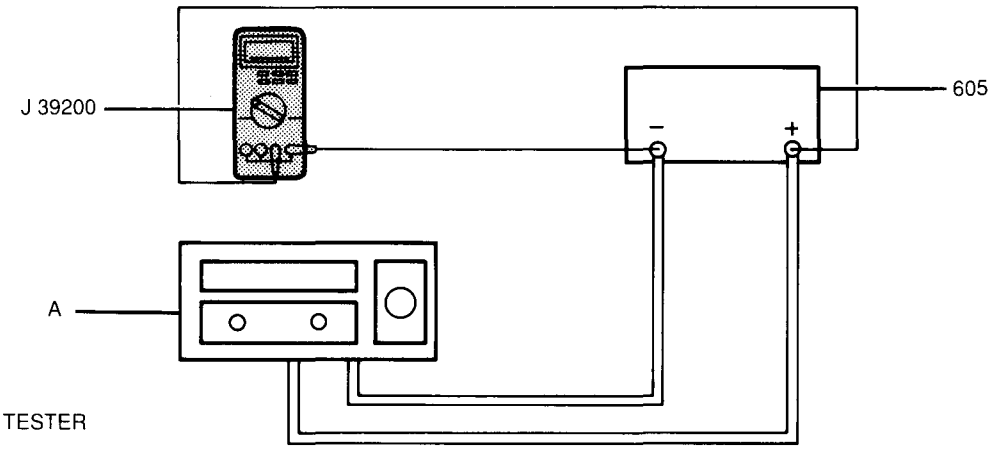

A BATTERY LOAD TESTER
605 BATTERY

PC6104-6D1-M-RS

Figure 4 Battery Load Test

BATTERY LOAD TEST VOLTAGE	
ESTIMATED TEMPERATURE	MINIMUM VOLTAGE
21°C (70°F)	9.6 VDC
10°C (50°F)	9.4 VDC
0°C (30°F)	9.1 VDC
-10°C (15°F)	8.8 VDC
-18°C (0°F)	8.5 VDC
Below -18°C (0°F)	8.0 VDC

NC0834-6D1-M-RS

Figure 5 Battery Temperature vs. Voltage Drop

BATTERY ELECTRICAL DRAIN

If a vehicle exhibits a low or dead battery after an overnight set or discharges over a period of two or three days, the electrical system should be checked for an excessive electrical drain. This condition is referred to as parasitic load drain. To properly diagnose this condition, perform the "Parasitic Load Test."

Parasitic Load Test

Figures 6 and 7

Tool Required:
J 39200 Digital Multimeter

1. Turn the ignition to "LOCK."
2. Charge the battery to a full state of charge. Refer to "Battery Charging" later in this section.
3. Disconnect the negative (-) battery cable.
4. Connect an ammeter capable of carrying at least 20 amperes in series between the negative (-) battery terminal and the negative (-) battery cable (Figure 6).

Measure

- Parasitic load draw (in amperes) with all doors closed and the ignition switch in the "LOCK" position.

5. If a parasitic load drain over 0.5 amperes is present, isolate the electrical system, circuit or component at fault through the following procedure:
   A. Remove fuses one at a time. Refer to SECTION 8A for electrical system schematics, system diagnosis, component location views and wiring repair procedures. If a parasitic load drain over 0.5 amperes is still present, proceed to step B.
   B. Remove fusible links one at a time. Refer to SECTION 8A for electrical system schematics, system diagnosis and wiring repair procedures. If a parasitic load drain over 0.5 amperes is still present, proceed to step C.
   C. Check the starter motor, starter solenoid and related wiring for short circuits. Refer to SECTION 6D2 for starter motor and starter solenoid diagnosis and repair procedures. Refer to SECTION 8A for starter system wiring schematics and system diagnosis.
6. If a parasitic load drain less than 0.5 amperes is present, disconnect and remove the ammeter and connect a J 39200 between the negative (-) battery terminal and the negative (-) battery cable (Figure 7). Set the selector switch to Milliamp/ Microamp Input Terminal scale.

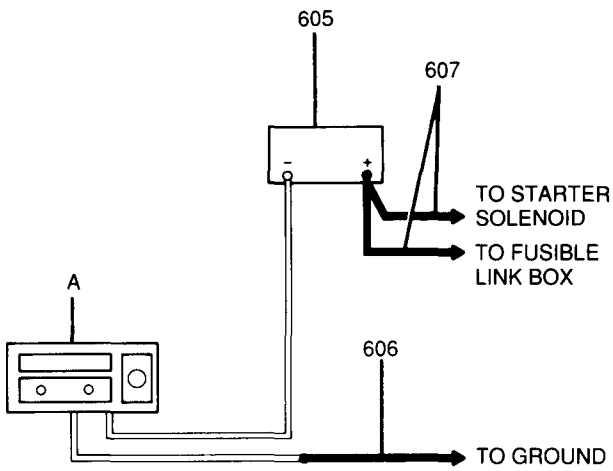

A AMMETER
605 BATTERY
606 NEGATIVE (–) BATTERY CABLE
607 POSITIVE (+) BATTERY CABLE

PC6106-6D1-JT-RS

Figure 6 Parasitic Load Test with Ammeter

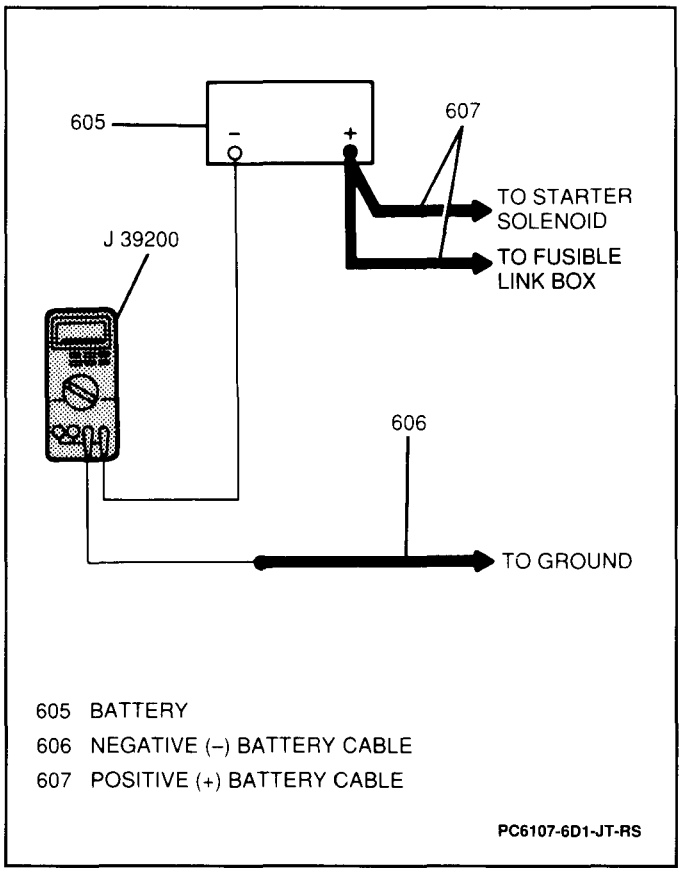

Figure 7 Parasitic Load Test with J 39200 Digital Multimeter

NOTICE: To prevent possible damage to the J 39200, do not open any doors or operate any equipment that would draw more than 10 amperes. If the fuse opens, replace it with a 10 ampere fast opening fuse. Failure to use the proper fuse may result in damage to the J 39200.

Measure

- Parasitic load draw (in milliamperes) with all doors closed and the ignition switch in the "LOCK" position.

7. Normal parasitic load drain is 10 to 25 milliamperes. If the parasitic load drain is more than 25 milliamperes, isolate the electrical system, circuit or component at fault through the following procedure:
   A. Remove fuses one at a time. Refer to SECTION 8A for electrical system schematics, system diagnosis, component location views and wiring repair procedures. If a parasitic load drain over 25 milliamperes is still present, proceed to step B.
   B. Remove fusible links one at a time. Refer to SECTION 8A for electrical system schematics, system diagnosis and wiring repair procedures. If a parasitic load drain over 25 milliamperes is still present, proceed to step C.
   C. Check the starter motor, starter solenoid and related wiring for short circuits. Refer to SECTION 6D2 for starter motor and starter solenoid diagnosis and repair procedures. Refer to SECTION 8A for starter system wiring schematics and system diagnosis.

Important

- Repeat parasitic load test procedure after any electrical repair has been completed.

8. When the cause of the excessive parasitic load drain has been located and repaired, disconnect and remove the J 39200 and connect the negative (-) battery cable.

Tighten

- Negative (-) battery cable-to-negative (-) battery terminal retainer to 15 N·m (11 lb.ft.).

ON-VEHICLE SERVICE

BATTERY CHARGING

When it is necessary to charge the battery, the following conditions must be observed:

- Use a constant voltage power supply with an end charge voltage of 16.0 volts-direct current (VDC) and equipped with a voltmeter that is accurate within 1%.
- If more than one battery is to be charged, the batteries should be connected in parallel with each other; positive to positive (+ to +) and negative to negative (- to -).
- Ambient (surrounding) temperature should be 15 to 38°C (60 to 100°F). A battery that is extremely cold may not accept current for several hours after charging has begun.
- Charging area should be well ventilated.
- Do not charge battery if the built-in hydrometer is clear or light yellow. Replace the battery if this condition is discovered. Refer to "Built-In Hydrometer" earlier in this section for additional details.
- Do not charge the battery if the electrolytes are frozen.
- If the battery feels as hot as 52°C (125°F) or hotter, or if violent gassing or spewing of electrolyte through the vent holes occurs, discontinue charging or reduce the charging rate.

Charging Procedure

Figure 8

1. Batteries with a built-in hydrometer showing a green dot do not require charging unless they have just been discharged (by cranking the engine).
2. Connect the battery charger cables to the positive (+) and negative (-) battery terminals (Figure 8). Make sure all charger cable-to-battery terminal connections are clean and tight.

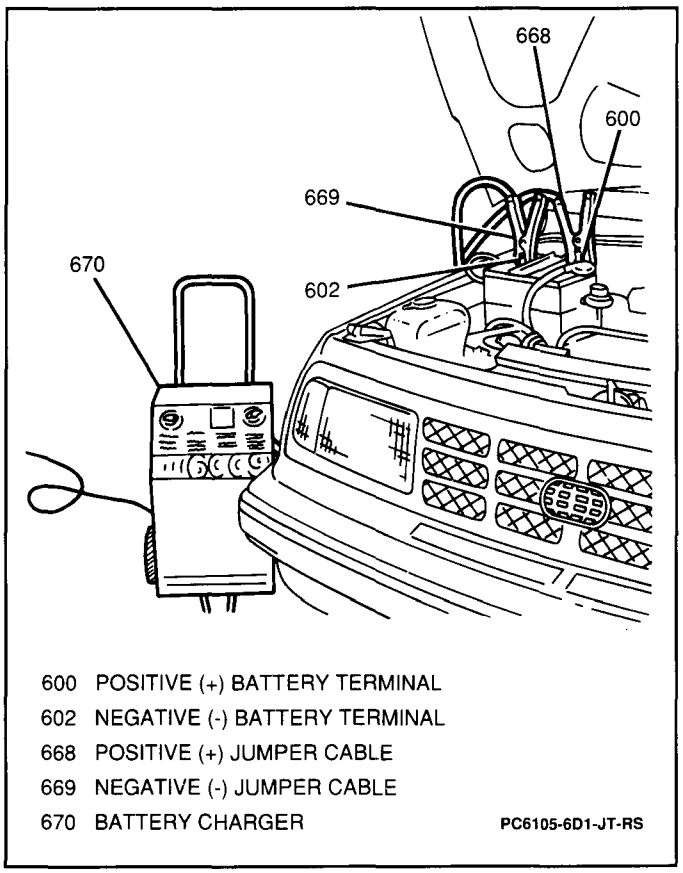

Figure 8 Battery Charging

3. Charge the battery using the charge setting for 12 VDC batteries that gives the highest charge rate to the battery. Refer to the battery charger manufacturer's instructions.

Important

- Do not use the charge settings for jump starting vehicles.

4. Charge the battery until the green dot appears in the hydrometer.Check the battery every half-hour. The battery may need to be tipped or shaken gently for the green dot to appear.
5. After charging, the battery should be tested. Refer to "Battery Testing" earlier in this section.

Charging Time Required

The time required to charge a battery will vary depending upon the following factors:

- **Size of battery** — A completely discharged, large (heavy-duty) battery requires more than twice the recharging time as a completely discharged small (passenger car) battery.
- **Temperature** — A longer time will be needed to charge any battery at -18°C (0°F) than at 27°C (80°F). When a fast charger is connected to a cold battery, the current accepted by the battery will be very low at first. The battery will accept a higher rate of current as it warms.
- **Charger capacity** — A charger which can supply only 5 amperes will require a much longer charging period than a charger that can supply 30 amperes or more.
- **State-of-charge** — A completely discharged battery requires more than twice as much charge as a half charged battery. Because the electrolyte is nearly pure water and a poor conductor in a completely discharged battery, the current accepted by the battery is very low at first. Later, as the charging current causes the electrolyte acid content to increase, the charging current will also increase.

Any battery discharged by parasitic load, and then allowed to stand in this condition for a period of time, may not accept charge readily. However, if recharged long enough, many batteries will return to a good usable condition.

If the battery remains in an extremely discharged condition for a prolonged period, it can become permanently damaged. This damage can be accelerated by low temperatures. Batteries which are extremely discharged can freeze at temperatures as high as -6°C (20°F) and be permanently damaged.

To prevent battery damage and recharge problems, vehicles which are not going to be in service within a 20 day period should have the battery negative (-) cable disconnected to remove the constant drain on the battery. If this is not possible, the battery should be recharged periodically every 20 to 45 days until the green dot is visible in the hydrometer or an open circuit voltage of 12.4 VDC is obtained.

Charging a Very Low or Completely Discharged Battery

The following procedure should be used to recharge a very low or completely discharged battery. Unless this procedure is properly followed, a perfectly good battery may be needlessly replaced.

Tool Required:
J 39200 Digital Multimeter

1. Measure voltage at battery terminals with a J 39200. If the battery voltage is below 11 VDC, the charge current will be very low and it could take some time before the battery accepts a current in excess of a few milliamperes. Such low current may not be detectable on some ammeters.
2. Set the battery charger on a high setting.
3. Some chargers feature polarity protection circuitry which prevents charging unless the charger leads are connected to the battery terminals correctly. A completely discharged battery may not have enough voltage to activate this circuitry, even though leads are connected properly, making it appear that the battery will not accept charging current. Therefore, follow the specific charger manufacturer's instructions explaining how to bypass the polarity protection circuitry, allowing the charger to charge a low-voltage battery.
4. Battery chargers vary in the amount of voltage and current they provide. The time required for a battery to accept measurable charger current at various voltages are as follows:
   - 16.0 VDC or more — up to 4 hours.
   - 14.0 to 15.9 VDC — up to 8 hours.
   - 13.9 VDC or less — up to 16 hours.
5. If the charge current is still not measurable at the end of the above charging times, the battery should be replaced.
6. If the charge current is measurable during the charging time, the battery is considered to be good and charging should be completed in the normal manner. Refer to "Battery Charging" earlier in this section.
7. It is important to remember that a completely discharged battery must be recharged for a sufficient number of ampere hours (AH) to restore it to a usable state. As a general rule, using the reserve capacity (RC) rating of the battery as the number of ampere hours of charge will usually bring the desired hydrometer indication (green dot) into view. The battery used in this vehicle is rated at 75 RC minutes, therefore, it would be completely recharged as follows:
   - 10 ampere charge for 7.5 hours (10 x 7.5) = 75 AH
   - 25 ampere charge for 3 hours (25 x 3) = 75 AH
8. Any battery recharged by this procedure should be load tested to establish serviceability. Refer to "Battery Testing" earlier in this section.

JUMP STARTING IN CASE OF EMERGENCY WITH AUXILIARY (BOOSTER) BATTERY

Figure 9

NOTICE: Do not push or tow this vehicle to "push start" the engine. Damage to the emission system and/or to other engine and vehicle parts may result.

Both the booster and discharged battery should be treated carefully when using jumper cables. Follow the procedure below, using caution not to generate any sparks.

CAUTION: Departure from these conditions or the procedure below could result in: (1) serious personal injury (particularly to eyes) or property damage from such causes as battery explosion, battery acid or electrical burns; and/or (2) damage to the electronic components of either vehicle. Never expose any battery to open flame or electric spark — batteries generate a gas which is flammable and explosive. Remove rings, watches and other jewelry. Wear approved eye protection. Do not allow battery fluid to contact eyes, skin, fabrics or painted surfaces — battery fluid is a corrosive acid. Flush any contacted area with water immediately and thoroughly. Be careful that metal tools or jumper cables do not contact the positive battery terminal (or metal in contact with it) or any other metal on the vehicle — a short circuit will occur.

1. Set the parking brake and place the manual selector lever (automatic transaxle models) into "P." Turn the ignition switch to "LOCK." Turn all electrical accessories and lamps off.
2. Check the state of the built-in hydrometer, refer to "Built-In Hydrometer" earlier in this section. If it is clear or a light yellow color, replace the battery.

   NOTICE: When jump starting a vehicle with charging equipment, be sure that the charging equipment used is 12 volts and a negative ground. **Do not use 24 volt or positive ground charging equipment. Using such equipment can cause serious damage to the electrical system or electronic components on the vehicle.**

3. Attach one end of the positive (+) jumper cable to the positive (+) terminal of the booster battery and the other end (of the same cable) to the positive (+) terminal of the discharged battery (Figure 9).

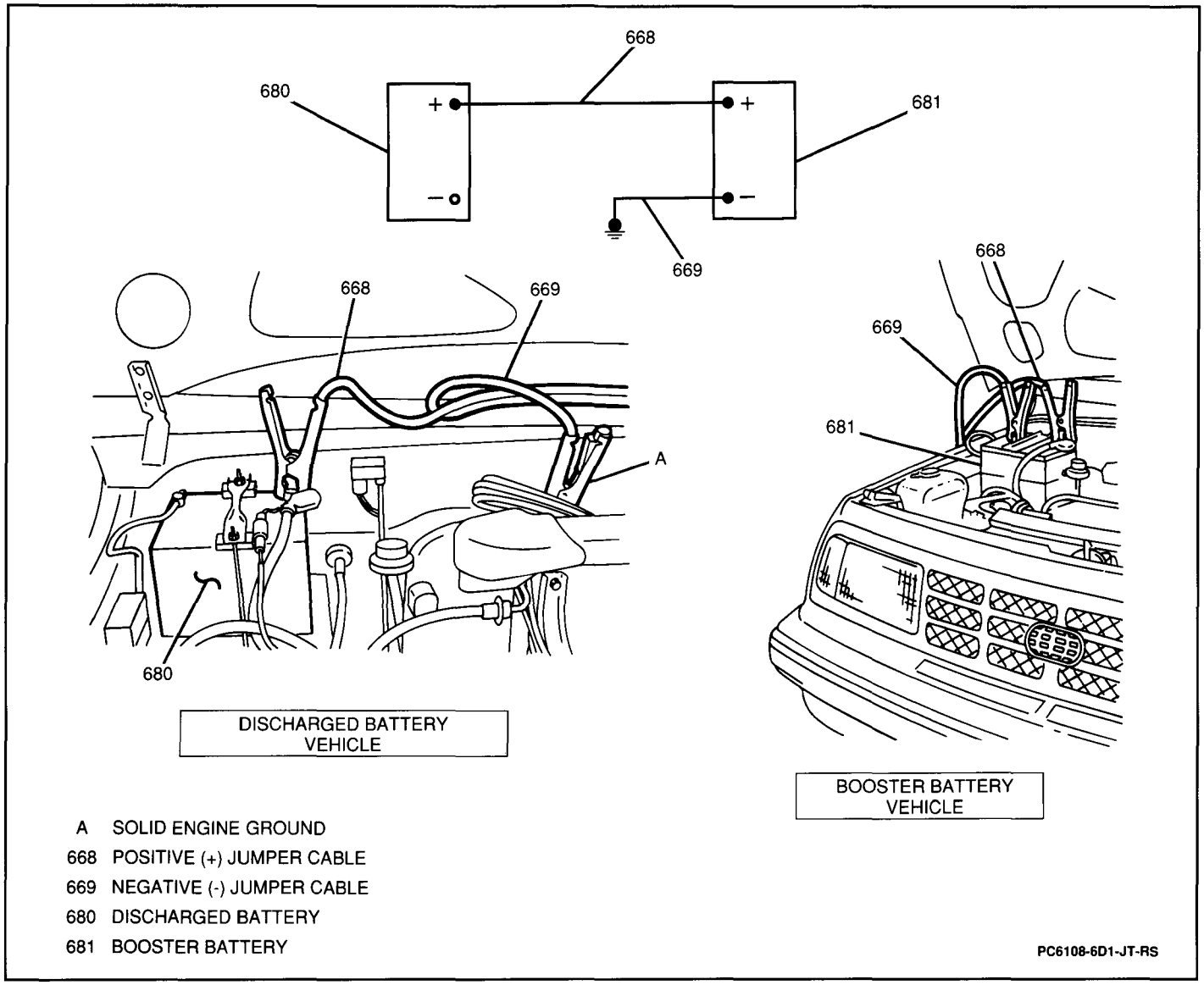

Figure 9 Jumper Cable Installation

Important

- Do not permit vehicles to touch each other. This could cause a grounding effect and counteract the jump starting procedure.

4. Attach one end of the negative (-) jumper cable to the negative (-) terminal of the booster battery and the other end to a solid engine ground (such as the A/C compressor mounting bracket or generator mounting bracket) at least 457 mm (18-inches) from the discharged battery (Figure 9).

Important

- DO NOT CONNECT THE NEGATIVE (-) JUMPER CABLE DIRECTLY TO THE NEGATIVE (-) TERMINAL OF THE DISCHARGED BATTERY.

5. Start the engine of the vehicle with the booster battery. Turn off all electrical accessories and lamps.
6. Start the engine of the vehicle with the discharged battery.
7. Disconnect and remove the negative (-) jumper cable from the solid engine ground and from the negative (-) terminal of the booster battery.
8. Disconnect and remove the positive (+) jumper cable from the positive (+) terminal of the then discharged battery and from the positive (+) terminal of the booster battery.

BATTERY REPLACEMENT

Figure 10

Remove or Disconnect

1. Negative (-) battery cable from negative (-) battery terminal (Figure 10).
2. Positive (+) battery cable from positive (+) battery terminal.
3. Two nuts and battery retainer from hold down brackets.
4. Battery from vehicle.

Install or Connect

1. Battery into vehicle; position into carrier.
2. Battery retainer to hold down brackets; secure with two nuts.

   Tighten

   - Battery hold down bracket nuts to 8 N·m (71 lb.in.).
3. Positive (+) battery cable to positive (+) battery terminal.
4. Negative (-) battery cable to negative (-) battery terminal.

   Tighten

   - Battery cable-to-battery terminal retainers to 15 N·m (11 lb.ft.).

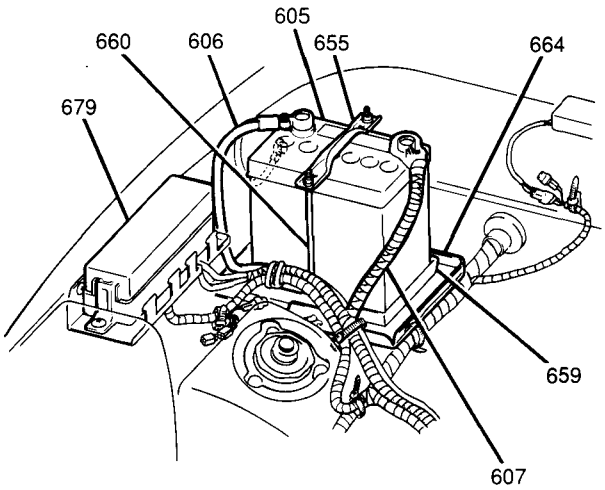

605 BATTERY
606 NEGATIVE (-) BATTERY CABLE
607 POSITIVE (+) BATTERY CABLE
655 BATTERY RETAINER
659 BATTERY CARRIER
660 BATTERY HOLD DOWN BRACKET
664 BATTERY TRAY
679 FUSIBLE LINK BOX

PC6109-6D1-JT-RS

Figure 10 Battery, Cables, Carrier and Hold Down Brackets

Battery Carrier and Hold Down Brackets

Figure 10

Remove or Disconnect

1. Negative (-) battery cable from negative (-) battery terminal (Figure 10).
2. Positive (+) battery cable from positive (+) battery terminal.
3. Two nuts and battery retainer from hold down brackets.
4. Battery from vehicle.
5. Battery hold down brackets from strut tower and bulkhead.
6. Carrier from vehicle.

Install or Connect

1. Carrier into vehicle.
2. Battery hold down brackets to strut tower and bulkhead.
3. Battery into vehicle; position into carrier.
4. Battery retainer to hold down brackets; secure with two nuts.

   Tighten

   - Battery hold down bracket nuts to 8 N·m (71 lb.in.).
5. Positive (+) battery cable to positive (+) battery terminal.
6. Negative (-) battery cable to negative (-) battery terminal.

   Tighten

   - Battery cable-to-battery terminal retainers to 15 N·m (11 lb.ft.).

BATTERY CABLE REPLACEMENT AND ROUTING

Important

- Whenever battery cables are being replaced, always be certain to use a replacement cable that is the same type, size and length. Some positive (+) cables have additional feed wires attached to them and some negative (-) cables have additional ground leads attached. Always be certain to route the replacement battery cable in exactly the same manner as the original cable.

Negative (-) Battery Cable

Figure 10

Remove or Disconnect

1. Battery from vehicle. Refer to "Battery Replacement" earlier in this section.
2. Ground bolt and negative (-) battery cable from body (Figure 10).
3. Ground bolt and cable from starter motor housing.
4. Cable from harness retainer near starter motor and remove cable from vehicle.

Install or Connect

- Position negative (-) battery cable into vehicle.

1. Cable to starter motor housing; secure with ground bolt.

   Tighten

   - Ground bolt to 23 N·m (17 lb.ft.).

2. Cable to body; secure with ground bolt.

   Tighten

   - Body ground bolt to 14 N·m (124 lb.in.).

- Route cable and secure in harness retainer near starter motor.

3. Battery into vehicle. Refer to "Battery Replacement" earlier in this section.

Positive (+) Battery Cable

Figures 10 and 11

Remove or Disconnect

1. Battery from vehicle. Refer to "Battery Replacement" earlier in this section.
2. Fusible link box cover.
3. Two bolts and positive (+) battery cable from fusible link box (Figure 10).
4. Retaining nut and cable from starter solenoid (Figure 11).
5. Retaining nut and cable from generator.
6. A/C fusible link from positive (+) battery terminal.
7. Cable from harness retainers and remove cable from vehicle.

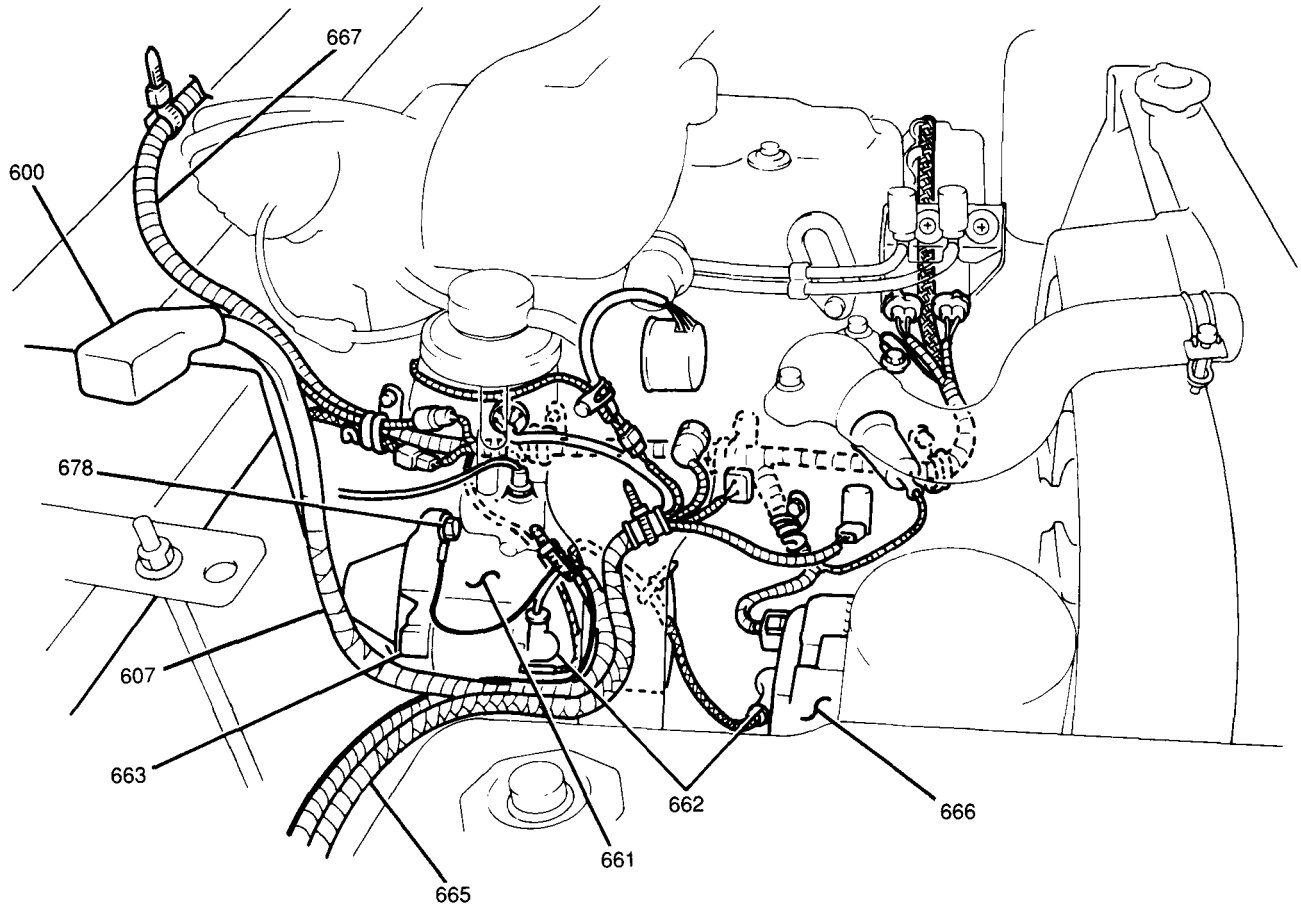

600 POSITIVE (+) BATTERY TERMINAL
607 POSITIVE (+) BATTERY CABLE
661 STARTER MOTOR
662 POSITIVE (+) BATTERY CABLE CONNECTION
663 STARTER SOLENOID
665 MAIN HARNESS
666 GENERATOR
667 ENGINE HARNESS
678 NEGATIVE (-) BATTERY CABLE GROUND

PC6110-6D1-JT-RS

Figure 11 Battery Positive (+) Cable-to-Starter Solenoid and Generator Connection

Install or Connect

- Position positive (+) battery cable into vehicle.

1. A/C fusible link to positive (+) battery cable.
2. Cable to generator; secure with retaining nut.

Tighten

- Positive (+) battery cable-to-generator retaining nut to 8 N·m (71 lb.in.).

3. Cable to starter solenoid; secure with retaining nut.

Tighten

- Positive (+) battery cable-to-starter solenoid retaining nut to 7 N·m (62 lb.in.).

4. Cable to fusible link box; secure with one bolt.

Tighten

- Fusible link box bolt to 10 N·m (89 lb.in.).

5. Fusible link box cover.

- Route cable and secure with harness retainers.

6. Battery into vehicle. Refer to "Battery Replacement" earlier in this section.

GROUND STRAPS

This vehicle does not use additional ground straps. All additional ground paths are through engine and transmission grounding brackets.

SPECIFICATIONS

FASTENER TORQUES

Battery Hold Down Bracket Nuts	8 N·m (71 lb.in.)
Battery Cable-to-Battery Terminal Retainers	15 N·m (11 lb.ft.)
Ground Bolt	23 N·m (17 lb.ft.)
Body Ground Bolt	14 N·m (124 lb.in.)
Fusible Link Box Bolt	10 N·m (89 lb.in.)
Generator Retaining Nut	8 N·m (71 lb.in.)

SERVICE PARTS INFORMATION

Component Name Used in Section 6D1	Reference Name in Service Parts Catalog	Group Number
Battery	Not Serviced Through GM SPO	N/A
Battery Carrier	Tray, Bat	2.333
Battery Hold Down Bracket	Rod, Bat Hold, Ret	2.334
Battery Retainer	Bracket, Bat Tray	2.333
Positive (+) Battery Cable	Cable, Bat Pos (To Strtr Mot)	2.342
Negative (-) Battery Cable	Cable, Bat Neg (Ground)	2.341

BATTERY USAGE CHART				
REPLACEMENT MODEL	CATALOG NUMBER	TEST LOAD AMPERES	COLD CRANKING AMPERES	RESERVE CAPACITY MINUTES
26-60S	C900	250	500	75

PC6111-6D1-JT-RS

SPECIAL TOOLS

1

J 39200

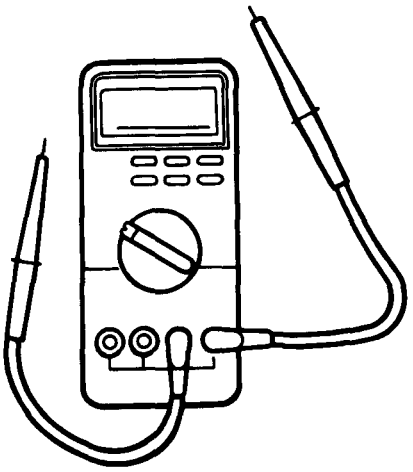

1 DIGITAL MULTIMETER

PC6102-6D1-M-RS

SECTION 6D2

CRANKING SYSTEM

CAUTION: Before removing or installing any electrical unit or when a tool or equipment could easily come in contact with "live" exposed electrical terminals, disconnect the negative (-) battery cable to help prevent personal injury and/or damage to the vehicle or components. Unless instructed otherwise, the ignition switch must be in the "OFF" or "LOCK" position.

NOTICE: When fasteners are removed, always reinstall them at the same location from which they were removed. If a fastener needs to be replaced, use the correct part number fastener for that application. If the correct part number fastener is not available, a fastener of equal size and strength (or stronger) may be used. Fasteners that are not reused, and those requiring thread-locking compound, will be called out. The correct torque values must be used when installing fasteners that require them. If the above procedures are not followed, parts or system damage could result.

CONTENTS

General Description 6D2-1
Cranking Circuit 6D2-1
Starter Motor 6D2-2
Diagnosis 6D2-4
Starter Assembly Performance Testing 6D2-4
Pull-In Test 6D2-4
Hold-In Test 6D2-4
Pinion Return Test 6D2-5
On-Vehicle Service 6D2-5
Starter Replacement 6D2-5
Unit Repair 6D2-6
Solenoid Replacement 6D2-6
No-Load Test 6D2-7
Starter Disassembly 6D2-8
Cleaning, Inspection and Testing 6D2-10
Starter Assembly 6D2-14
Specifications 6D2-15
Fastener Torques 6D2-15
Starter Motor Usage 6D2-15
Service Parts Information 6D2-16
Special Tools 6D2-17

GENERAL DESCRIPTION

CRANKING CIRCUIT

Figure 1

The cranking circuit consists of the battery, starter motor, ignition switch and all related electrical wiring (Figure 1). This section will cover the starter motor. Refer to SECTION 8A for electrical schematics and diagnostic procedures.

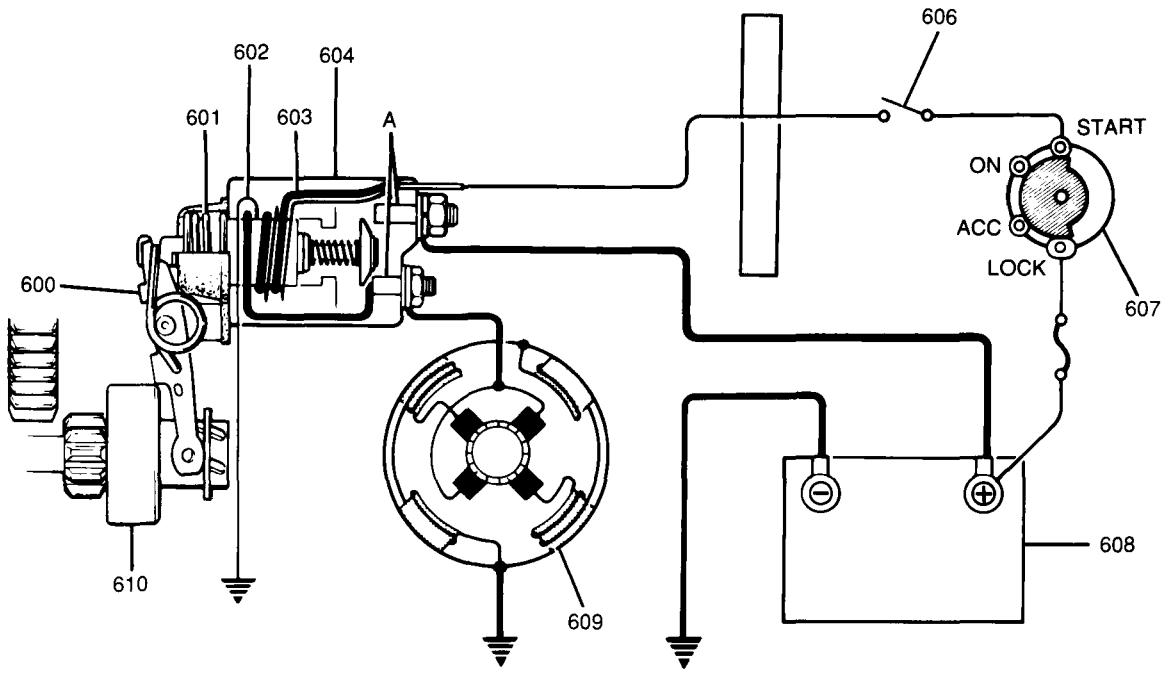

A SOLENOID CONTACTS
600 PINION DRIVE LEVER
601 PLUNGER/SPRING
602 HOLD-IN COIL
603 PULL-IN COIL
604 STARTER SOLENOID
606 PARK/NEUTRAL POSITION SWITCH (AUTOMATIC TRANSMISSION) CLUTCH PEDAL POSITION SWITCH (MANUAL TRANSMISSION)
607 IGNITION SWITCH
608 BATTERY
609 STARTER MOTOR
610 OVERRUNNING CLUTCH ASSEMBLY

PC6200-6D2-JT-RS

Figure 1 Cranking Circuit

STARTER MOTOR

Figure 2

The starter solenoid windings are energized when the ignition switch is turned to the "START" position and the clutch pedal position (CPP) switch (manual transmission) or the park/neutral position (PNP) switch (automatic transmission) is closed. (In manual transmission equipped vehicles, the clutch pedal must be fully depressed to activate the clutch pedal position switch.) The resulting plunger and shift lever movement causes the drive pinion to engage the engine flywheel ring gear and the starter solenoid contacts to close.

With the contacts closed, the starter solenoid provides a closed circuit between the positive (+) battery terminal and the starter motor. The circuit is complete and cranking occurs as soon as the starter solenoid contacts are closed (the starter motor is permanently grounded to the engine block). When the engine starts, the clutch and drive assembly is designed to overrun and protect the armature from excessive speed until the ignition switch is released from the "START" position. After the ignition switch is released from the "START" position, a return spring in the solenoid assembly forces the starter solenoid contacts open, breaking the circuit between the battery and the starter motor, and disengaging the clutch and drive assembly (Figure 2). The ignition switch should be released immediately upon engine start-up to prevent prolonged overrun.

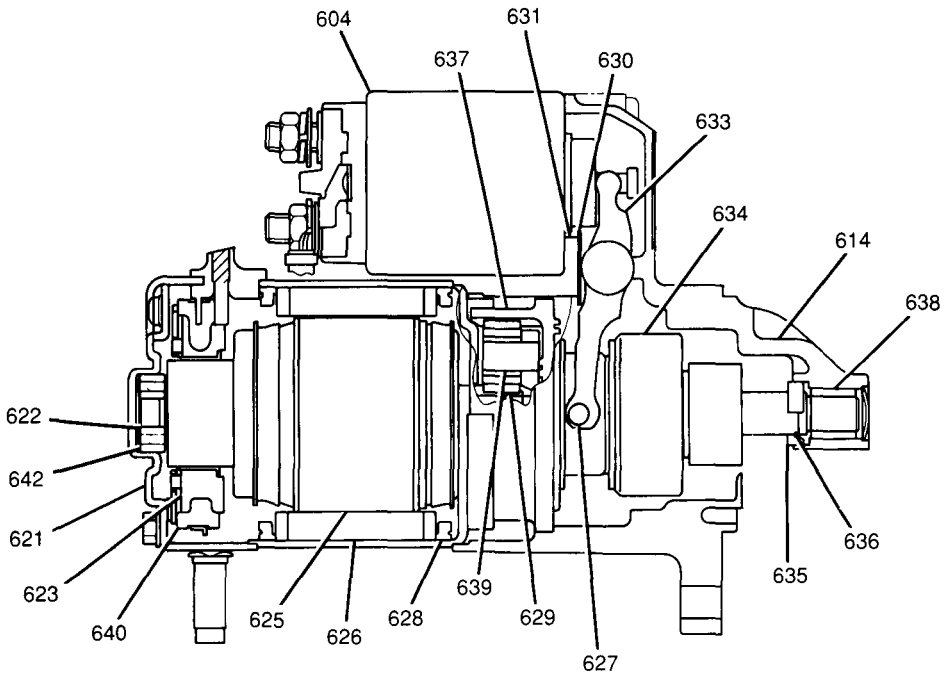

A LIGHTLY GREASE WITH LUBRIPLATE LUBRICANT GM P/N 1050109, OR EQUIVALENT
604 STARTER SOLENOID
605 COMMUTATOR END
612 FIELD COIL LEAD WIRE
614 DRIVE HOUSING
621 COMMUTATOR END HOUSING
622 SPRING WASHER
623 BRUSH HOLDER
625 ARMATURE
626 STARTER MOTOR YOKE
627 ARMATURE BEARING
628 IDLE GEAR RETAINER
629 IDLE GEARS (3)
630 PINION DRIVE LEVER PLATE
631 PINION DRIVE LEVER SEAL
633 PINION DRIVE LEVER
634 OVERRUNNING CLUTCH
635 OVERRUNNING CLUTCH STOP RING
636 OVERRUNNING CLUTCH RETAINING RING
637 INTERNAL GEAR ASSEMBLY
638 GEAR SHAFT ASSEMBLY BUSHING
639 MOTOR GEAR SHAFT
640 STARTER MOTOR BRUSH
642 ARMATURE BUSHING
643 PINION GEAR
647 BRUSHES
649 BRUSH SPRINGS

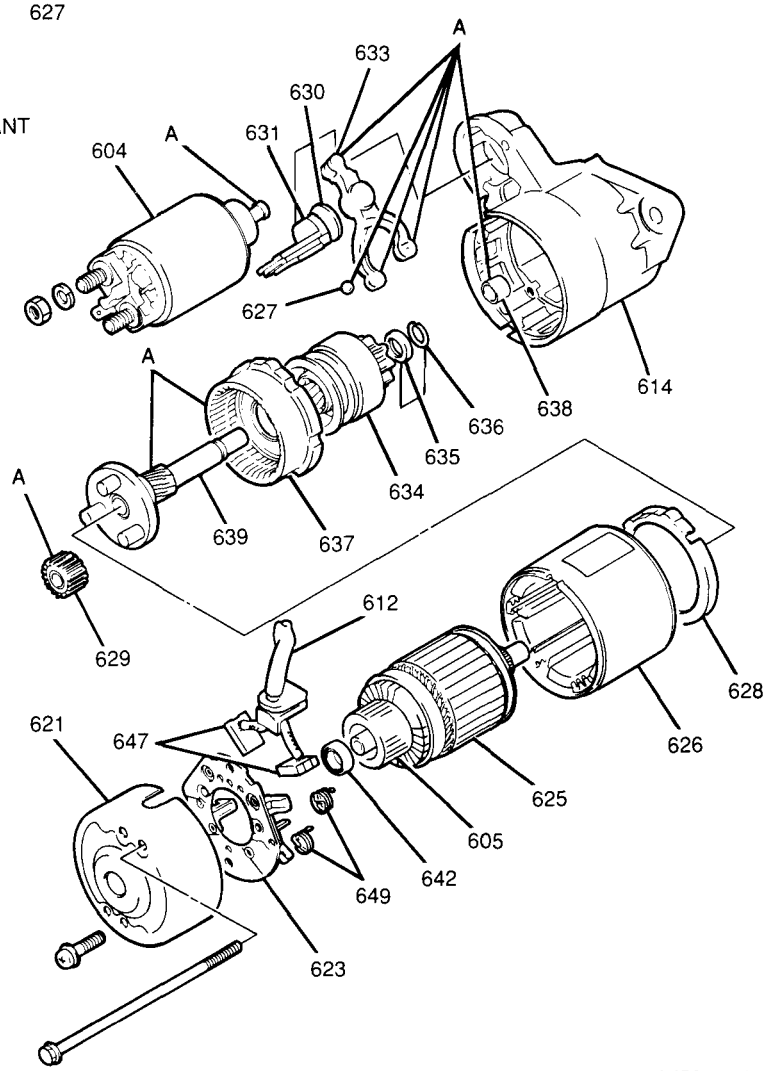

PC6218-6D2-JT-RS

Figure 2 Starter Motor

DIAGNOSIS

Before removing any unit in the cranking circuit for repair, perform the diagnostic procedures in SECTION 8A-30 and also check the following items:

Battery: To determine the condition of the battery, follow the testing procedures outlined in SECTION 6D1.

Wiring: Inspect for wiring damage. Inspect the connections to the starter motor, the starter solenoid, the ignition switch, the battery, and all related ground points.

Starter Solenoid and Ignition Switch: Inspect these components to determine their serviceability.

Starter Motor: If the battery, wiring and switches are in satisfactory condition and the engine is functioning properly, remove and test the starter motor. Refer to "Starter Replacement" later in this section. Perform starter assembly performance tests. Refer to "Starter Assembly Performance Testing" later in this section.

STARTER ASSEMBLY PERFORMANCE TESTING

Figures 3 through 5

NOTICE: These tests should be limited to 5 seconds each to avoid damaging the starter solenoid.

Remove or Disconnect

- Starter motor assembly. Refer to "Starter Replacement" later in this section.

Pull-In Test

Remove or Disconnect

- Field coil lead wire from solenoid terminal (Figure 3).

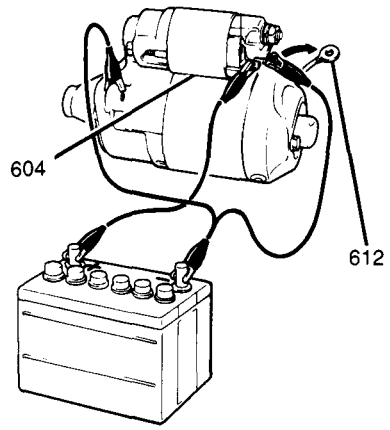

604 STARTER SOLENOID
612 FIELD COIL LEAD WIRE
PC6201-6D2-JT-RS

Figure 3 Pull-In Test

Install or Connect

- Test leads from battery to starter motor assembly (Figure 3).

Inspect

- That the pinion extends quickly and completely to the energized position.
- If the pinion movement is satisfactory, proceed to the "Hold-In Test" later in this section.
- If the pinion movement is not satisfactory, replace the starter solenoid. Refer to "Solenoid Replacement" later in this section.

Hold-In Test

Remove or Disconnect

- Negative (-) test lead from field coil lead wire solenoid terminal (Figure 4).

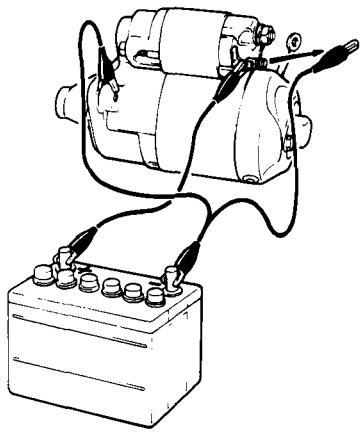

KC0029-6D2-M-RS

Figure 4 Hold-In Test

Inspect

- Check that the pinion remains completely in the energized position.
- If the pinion remains in the energized position, proceed to the "Pinion Return Test" later in this section.
- If the pinion does not remain completely energized, replace the starter solenoid. Refer to "Solenoid Replacement" later in this section.

Pinion Return Test

Remove or Disconnect

- Negative (-) lead from starter motor assembly (Figure 5).

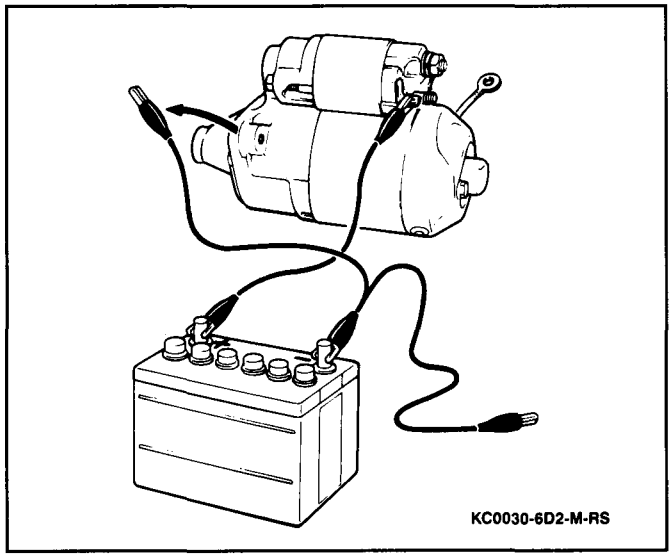

Figure 5 Pinion Return Test

Inspect

- That the pinion returns quickly and completely to the de-energized position.
- If the pinion returns quickly and completely, proceed to the "No-Load Test" later in this section.
- If the pinion does not return to the de-energized position, the cause is most likely a faulty starter solenoid return spring, requiring replacement of the starter solenoid. Refer to "Solenoid Replacement" later in this section and retest. If after solenoid replacement, the pinion does not return satisfactorily to the de-energized position, proceed to "Starter Disassembly" and "Cleaning, Inspection and Testing" later in this section for further inspection procedures.

ON-VEHICLE SERVICE

STARTER REPLACEMENT

Remove or Disconnect

1. Negative (-) battery cable from negative (-) battery terminal.
2. Retaining nut and positive (+) battery cable from starter solenoid.
3. Starter solenoid electrical connector.
4. One nut, upper mounting bolt and negative (-) battery cable from starter motor assembly.
5. Lower mounting nut and starter motor assembly from vehicle.

Install or Connect

1. Starter motor assembly to vehicle; secure with lower mounting nut.

   Tighten

   - Starter motor assembly lower mounting nut to 30 N·m (22 lb.ft.).

2. Negative (-) battery cable to starter motor assembly; secure with upper mounting bolt and retaining nut.

   Tighten

   - Starter motor assembly upper mounting bolt and retaining nut to 30 N·m (22 lb.ft.).

3. Positive (+) battery cable to starter solenoid; secure with one nut.

   Tighten

   - Starter solenoid nut to 15 N·m (11 lb.ft.).

4. Starter solenoid electrical connector.
5. Negative (-) battery cable to negative (-) battery terminal.

   Tighten

   - Negative (-) battery cable-to-negative (-) battery terminal retainer to15 N·m (11 lb.ft.).

UNIT REPAIR

SOLENOID REPLACEMENT

Figures 6 through 10

Important

- Scribe matchmarks on the solenoid and drive housing to ensure proper solenoid installation (Figure 6).

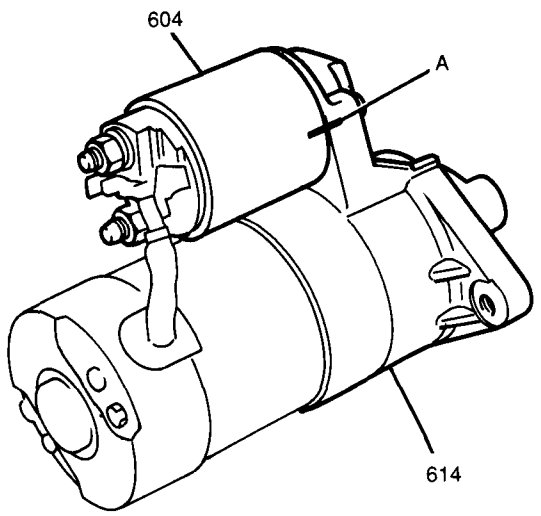

A SOLENOID-TO-DRIVE HOUSING MATCHMARK
604 STARTER SOLENOID
614 DRIVE HOUSING
PC6204-6D2-JT-RS

Figure 6 Solenoid-to-Drive Housing Matchmark

Remove or Disconnect

1. Retaining nut and field coil lead wire from starter solenoid (Figure 7).

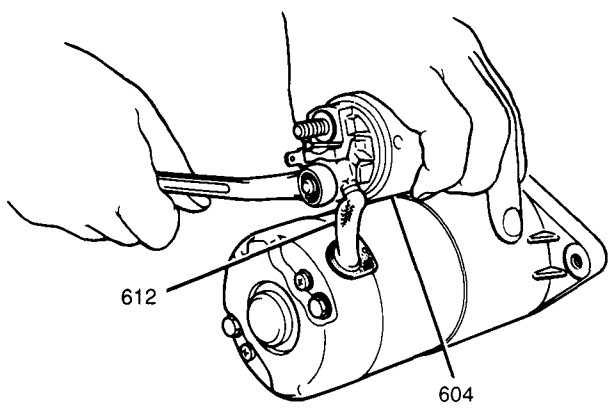

604 STARTER SOLENOID
612 FIELD COIL LEAD WIRE
PC6205-6D2-JT-RS

Figure 7 Removing Field Coil Lead Wire From Starter Solenoid

2. Two solenoid attaching screws and starter solenoid from drive housing (Figure 8).

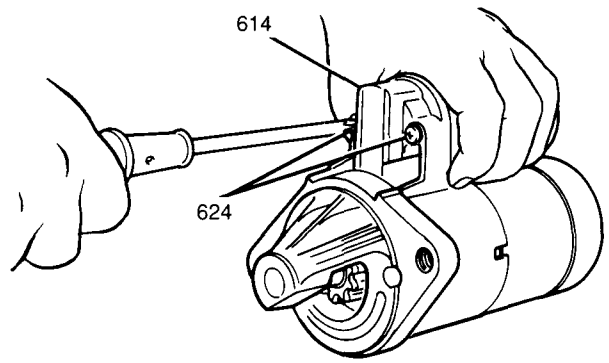

614 DRIVE HOUSING
624 SOLENOID-TO-STARTER MOTOR ATTACHING SCREWS
PC6206-6D2-JT-RS

Figure 8 Removing Starter Solenoid From Drive Housing

NOTICE: Do not disassemble the starter solenoid. If it is found to be defective, replace the solenoid.

Inspect

- Plunger joint and spring for wear; replace as necessary (Figure 9).

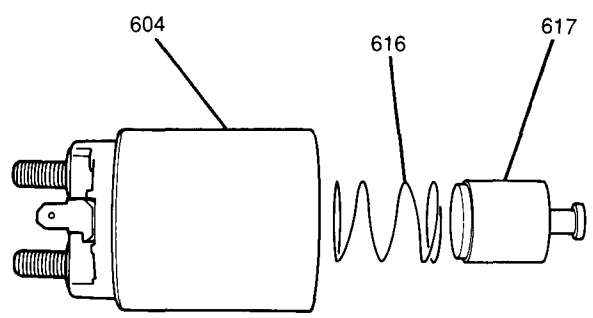

604 STARTER SOLENOID
616 SPRING
617 PLUNGER
PC6207-6D2-JT-RS

Figure 9 Solenoid Assembly

Install or Connect

- Lightly grease solenoid plunger with Lubriplate lubricant GM P/N 1050109, or equivalent.

1. Solenoid to drive housing aligning solenoid-to-drive housing matchmarks; secure with two screws (Figure 10).

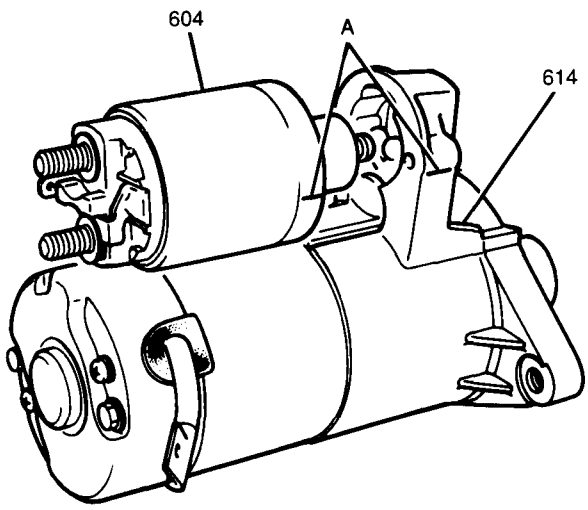

A SOLENOID-TO-DRIVE HOUSING MATCHMARK
604 STARTER SOLENOID
614 DRIVE HOUSING
PC6208-6D2-JT-RS

Figure 10 Installing Solenoid

2. Field coil lead wire to starter solenoid; secure with one nut.

Tighten

- Field coil lead wire nut to 15 N·m (11 lb.ft.).

NO-LOAD TEST

Figure 11

Install or Connect

- Test leads from battery and ammeter to starter motor assembly (Figure 11).

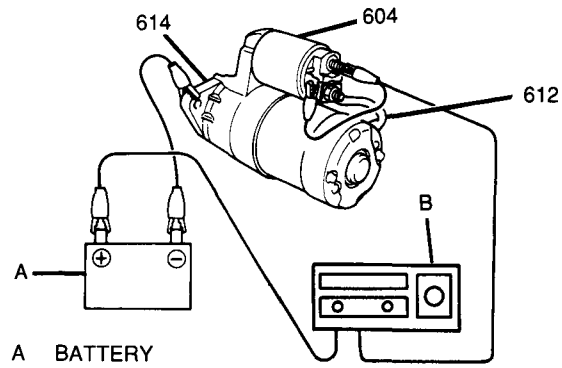

A BATTERY
B AMMETER
604 STARTER SOLENOID
612 FIELD COIL LEAD WIRE
614 DRIVE HOUSING
PC6209-6D2-JT-RS

Figure 11 No-Load Test

Inspect

- That the starter motor runs smoothly and that the pinion extends quickly and completely.

Measure

- Starter motor current draw. Standard starter motor current draw at 11 volts is:
  - Manual transmission equipped vehicles — No more than 50 amperes.
  - Automatic transmission equipped vehicles — No more than 90 amperes.

Evaluation

1. Low free speed and high current draw indicates:
   - Too much friction — tight, dirty or worn bushings, bent armature shaft allowing armature to drag.
   - Shorted armature. This can be further checked on a growler after disassembly.
   - Grounded armature or fields. Check further after disassembly.
2. Failure to operate and high current draw indicates:
   - A direct ground in the terminal or fields.
   - "Frozen" bearings.
3. Failure to operate and low or no current draw indicates:
   - Open solenoid windings.
   - Open field circuit. This can be checked after disassembly by inspecting internal connections.
   - Open armature coils. Inspect the commutator for badly burned bars after disassembly.
   - Broken brush springs, worn brushes, high insulation between the commutator bars or other causes which could prevent good contact between the brushes and commutator.

4. Low no-load speed and low current draw indicates:
   - High internal resistance due to poor connections, defective leads, dirty commutator and causes listed under fault number 3.
5. High free speed and high current draw indicate shorted fields. If shorted fields are suspected, replace the field coil assembly. Also check for shorted armature using a growler.
6. Rated current draw and no-load speed indicate normal condition of starter motor assembly; reinstall starter motor assembly onto vehicle.

Install or Connect

1. Field coil lead wire to starter solenoid; secure with one nut.

Tighten

- Field coil lead wire nut to 15 N·m (11 lb.ft.).

2. Starter motor assembly onto vehicle. Refer to "Starter Replacement" earlier in this section.

STARTER DISASSEMBLY

Figures 12 through 19

Remove or Disconnect

1. Starter solenoid from starter assembly. Refer to "Solenoid Replacement" earlier in this section.
2. Two bolts, two screws and commutator end housing from drive housing (Figure 12).

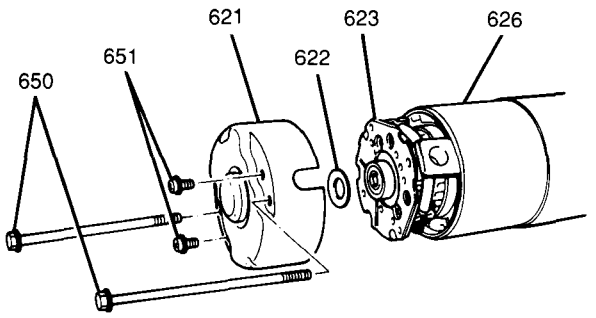

621 COMMUTATOR END HOUSING
622 SPRING WASHER
623 BRUSH HOLDER
626 STARTER MOTOR YOKE
650 COMMUTATOR END HOUSING BOLTS
651 COMMUTATOR END HOUSING SCREWS
PC6210-6D2-JT-RS

Figure 12 Removing Commutator End Housing

3. Brush holder and brushes from commutator end of armature (Figure 13).

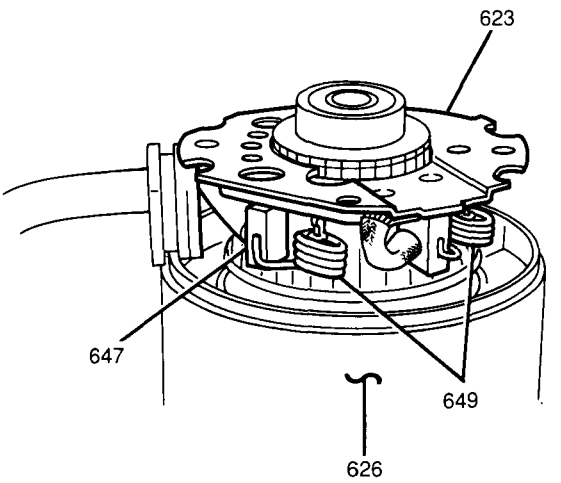

623 BRUSH HOLDER
626 STARTER MOTOR YOKE
647 BRUSHES
649 BRUSH SPRINGS
PC6211-6D2-JT-RS

Figure 13 Removing Brush Holder and Brushes

4. Armature and starter motor yoke from drive housing (Figure 14).

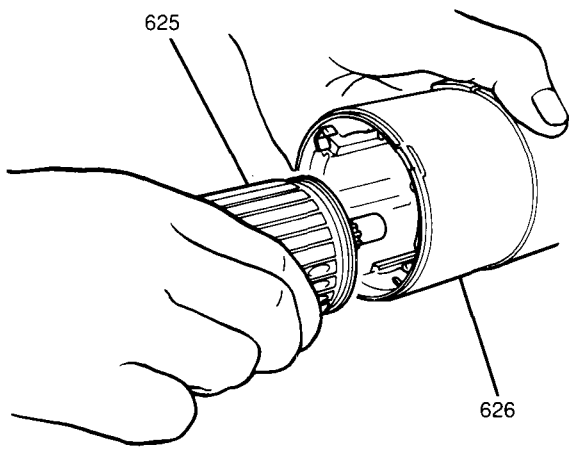

625 ARMATURE
626 STARTER MOTOR YOKE
PC6212-6D2-JT-RS

Figure 14 Removing Armature and Starter Motor Yoke

NOTICE: If the armature bearing comes out during the removal procedure, apply grease to it and reinsert (Figure 15).

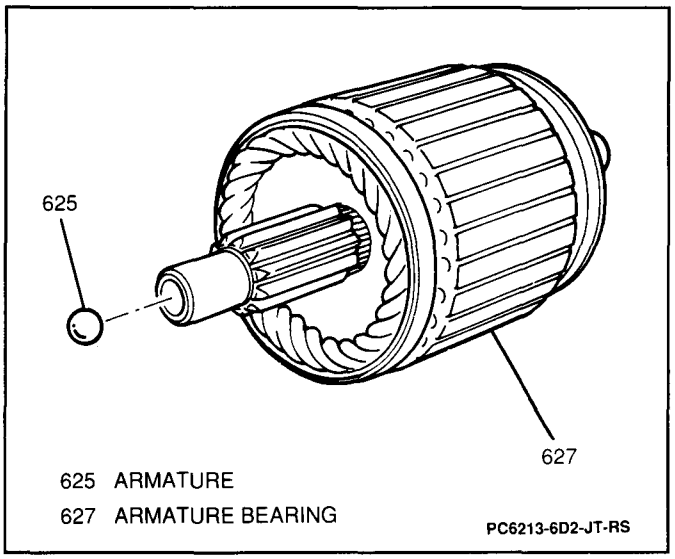

Figure 15 Armature Bearing

5. Idle gear retainer and idle gears from gear shaft assembly (Figure 16).

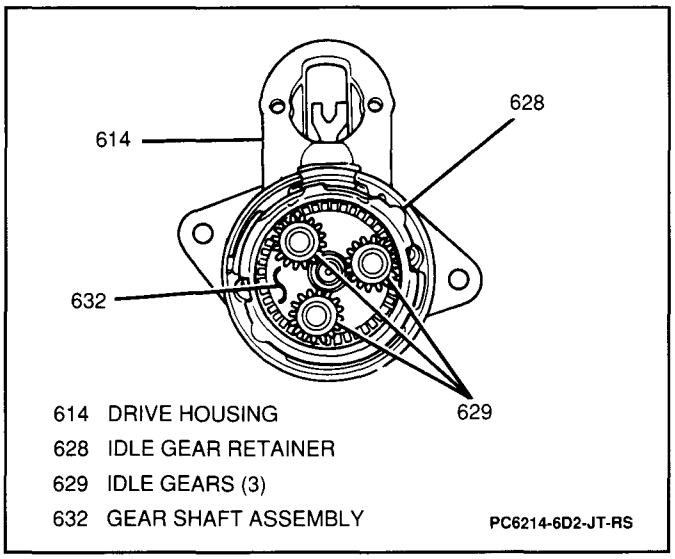

Figure 16 Removing Idle Gear Retainer and Idle Gears

6. Pinion drive lever seal and plate from drive housing (Figure 17).

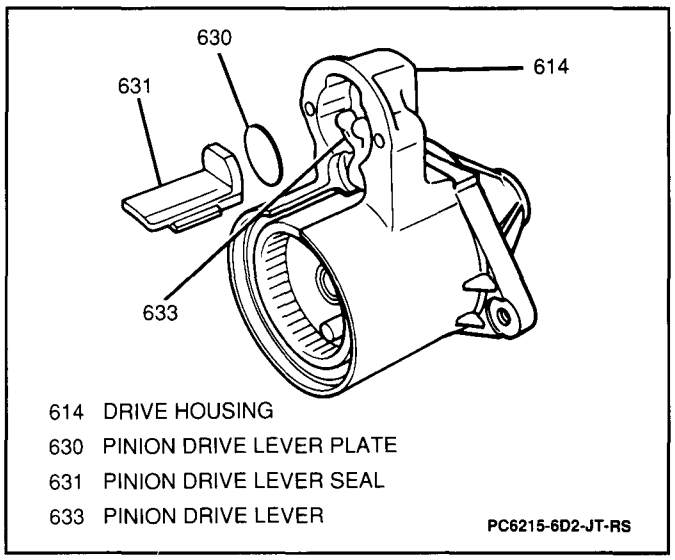

Figure 17 Removing Pinion Drive Lever Seal and Plate

7. Motor gear shaft assembly with pinion drive lever from drive housing (Figure 18).

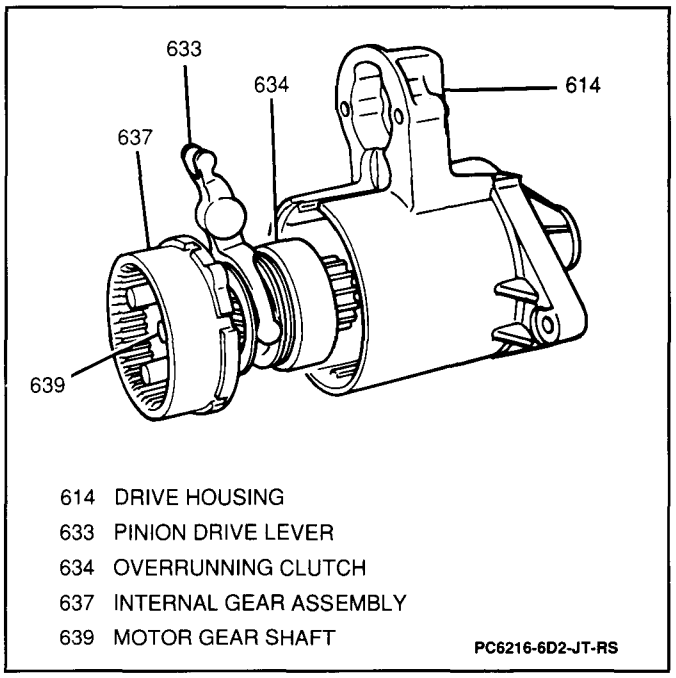

Figure 18 Removing Motor Gear Shaft Assembly

8. Overrunning clutch retaining ring, stop ring and overrunning clutch from motor gear shaft (Figure 19).

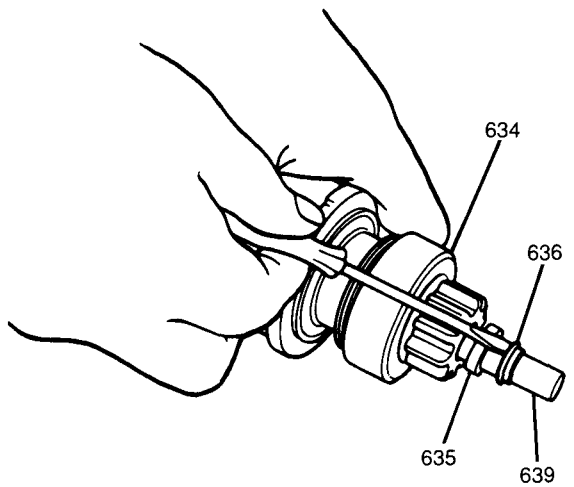

634 OVERRUNNING CLUTCH
635 OVERRUNNING CLUTCH STOP RING
636 OVERRUNNING CLUTCH RETAINING RING
639 MOTOR GEAR SHAFT PC6217-6D2-JT-RS

Figure 19 Removing Overrunning Clutch

CLEANING, INSPECTION AND TESTING

Figures 20 through 35

Tools Required:
J 544-01 Tension Scale
J 8001 Dial Indicator
J 26900-13 Magnetic Base
J 26900-5 Vernier Caliper
J 39200 Digital Multimeter

Clean

- All starter motor parts.

  NOTICE: Do not use grease dissolving solvents for cleaning. Such solvents will dissolve the grease packed in the overrunning clutch and may damage the armature and field coil insulation.
- Remove dirt and burn marks from the commutator end of the armature by sanding with a #300 or #400 grit sandpaper (Figure 20). Wipe parts with a clean shop cloth.

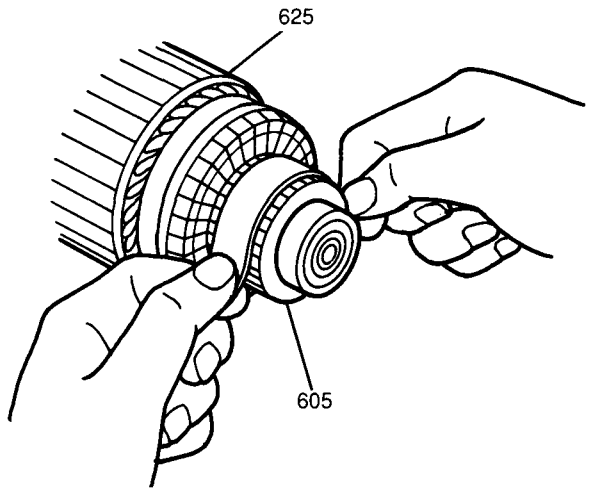

605 COMMUTATOR END
625 ARMATURE PC6223-6D2-JT-RS

Figure 20 Cleaning Commutator

Measure

- Place the armature onto a pair of "V-blocks." Using a J 8001 with a J 26900-13, measure commutator run-out (Figure 21). Standard commutator run-out is 0.05 mm (0.002-inch) or less. If run-out exceeds 0.40 mm (0.016-inch), replace the armature.

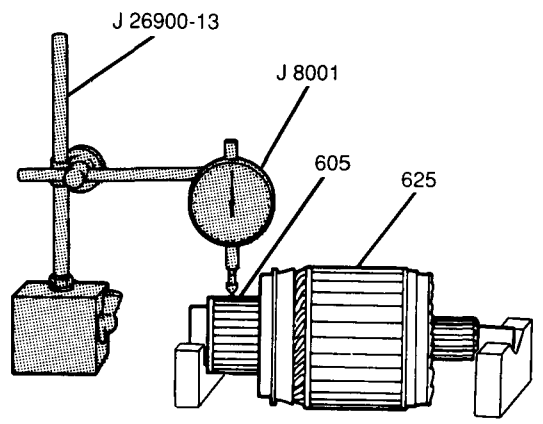

605 COMMUTATOR END
625 ARMATURE PC6202-6D2-JT-RS

Figure 21 Measuring Commutator Run-Out

1. Commutator wear using a J 26900-5 to measure the outside diameter of the commutator (Figure 22). Standard commutator outside diameter is 29.4 mm (1.157-inches). If the outside diameter is less than 28.8 mm (1.134-inches), replace the armature.

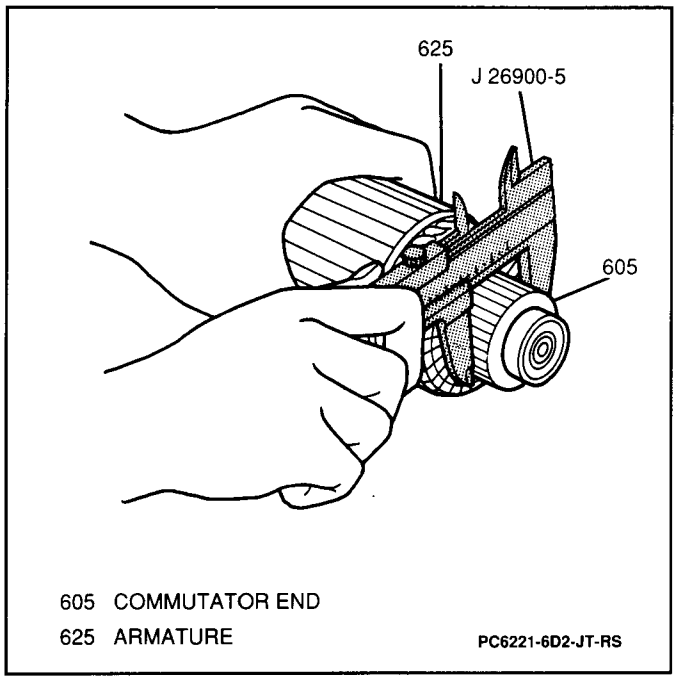

Figure 22 Measuring Commutator Wear

2. Commutator insulation depth (Figure 23). Standard commutator insulation depth is 0.5 to 0.8 mm (0.020 to 0.031-inch). If insulation depth is less than 0.2 mm (0.008-inch), replace the armature.

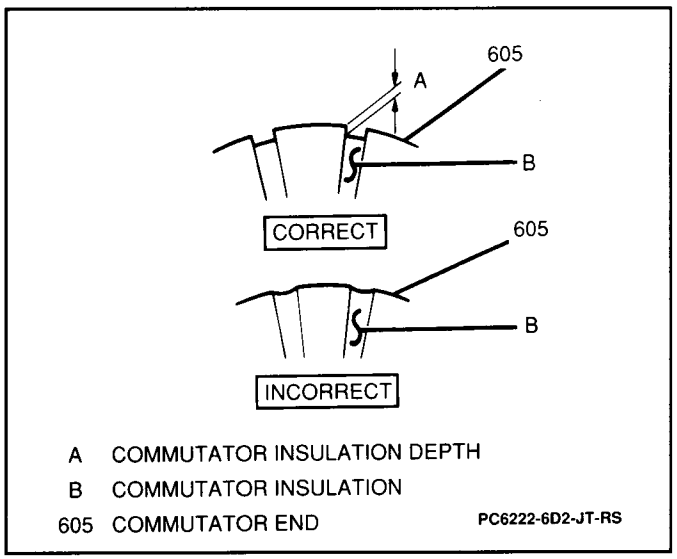

Figure 23 Measure Commutator Insulation Depth

3. Resistance between armature core and commutator using a J 39200 (Figure 24). If resistance is 5.0 ohms or less, the armature is grounded and must be replaced.

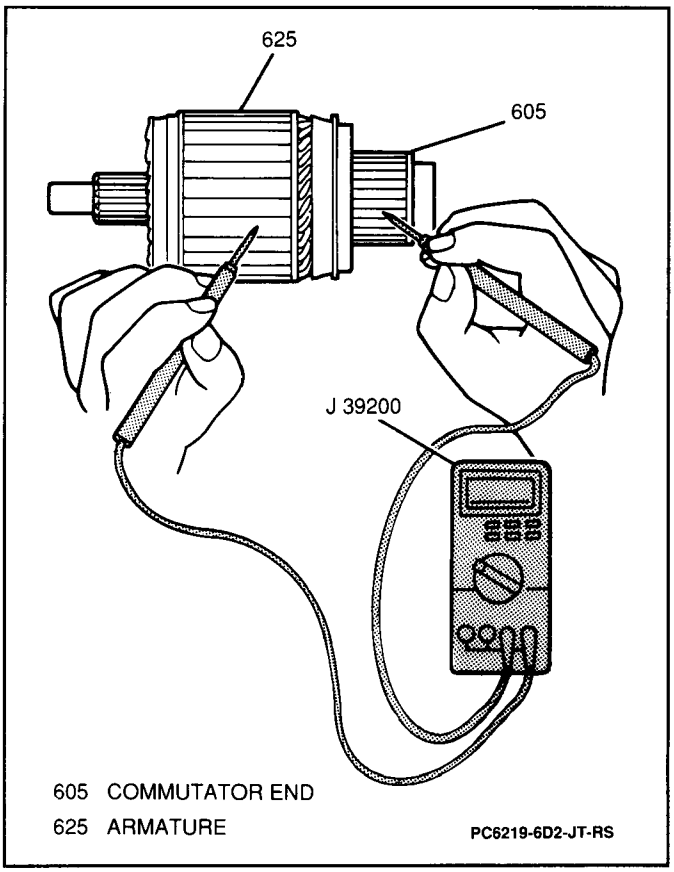

Figure 24 Measuring Armature Core-to-Commutator Resistance

4. Resistance between commutator segments using the J 39200 (Figure 25). If resistance is not 5.0 ohms or less at any test point, there is an open circuit in the commutator and the armature must be replaced.

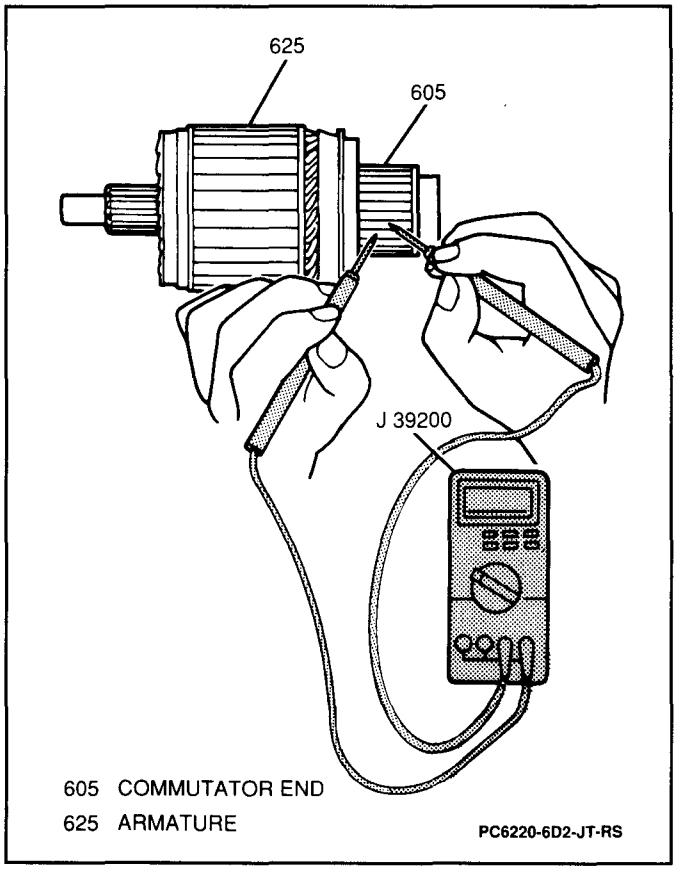

Figure 25 Measuring Commutator Resistance

5. Brush length using the J 26900-5 (Figure 26). Standard brush length is 17.5 mm (0.67-inch). If brush length is less than 12.0 mm (0.47-inch), replace the brush.

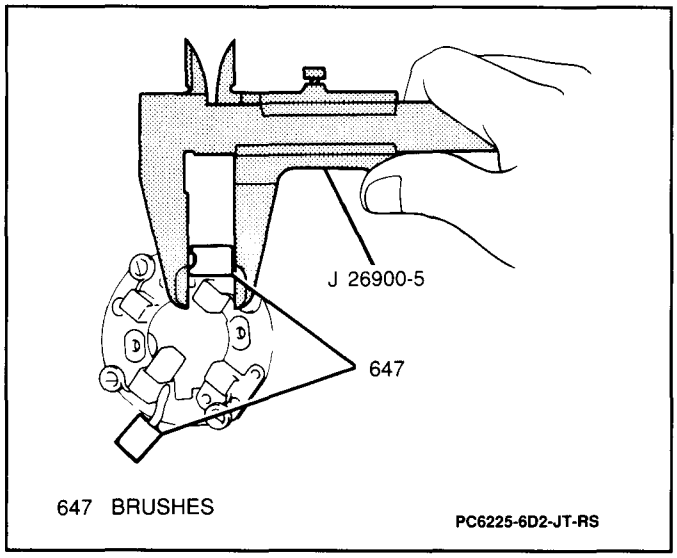

Figure 26 Measuring Brush Length

6. Resistance between positive brush holder and negative brush holder using the J 39200 (Figure 27). If the resistance is 5.0 ohms or less, the brush holder is grounded and must be replaced.

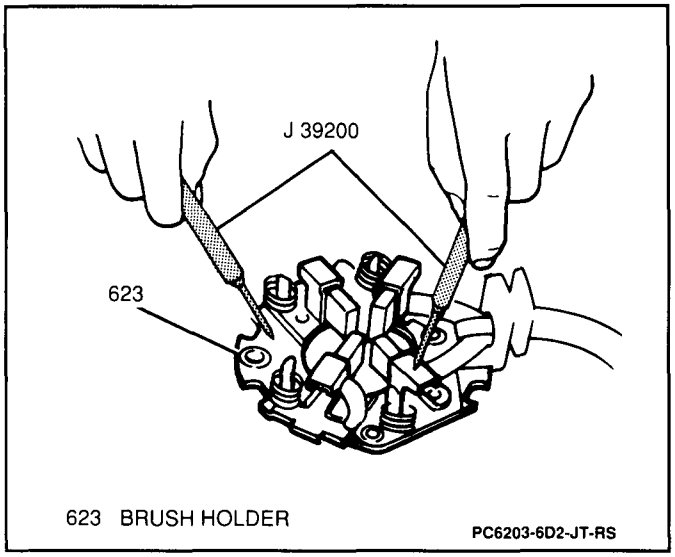

Figure 27 Measuring Brush Holder Resistance

7. Brush spring tension using a J 544-01 (Figure 28). Standard tension is 1.9 kg (4.19 lbs.). If brush spring tension is less than 0.7 kg (1.54 lbs.), the brush spring must be replaced.

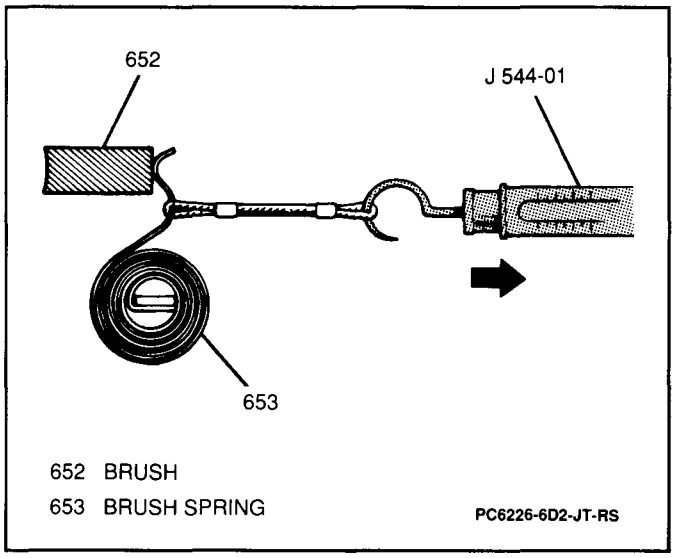

Figure 28 Measuring Brush Spring Tension

8. Starter solenoid pull-in coil resistance between terminal "S" and terminal "M" using the J 39200 (Figure 29). If resistance is not 5.0 ohms or less, the pull-in coil is open and the starter solenoid must be replaced.

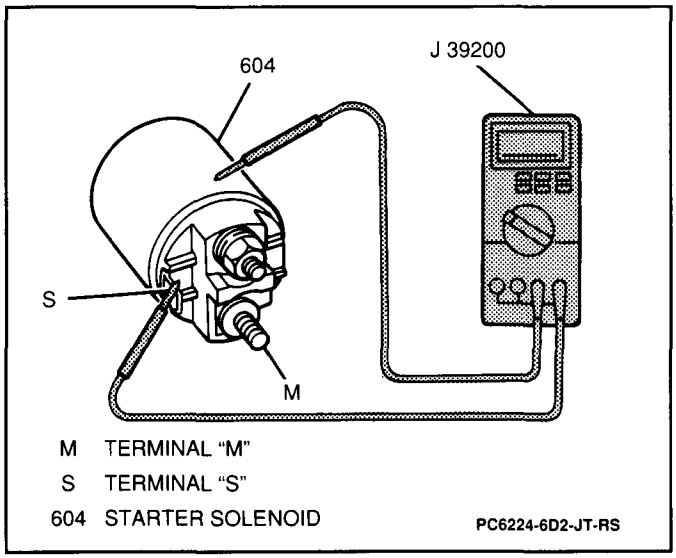

Figure 29 Measuring Starter Solenoid Pull-In Coil Resistance

9. Starter solenoid hold-in coil resistance between terminal "S" and the solenoid case using the J 39200 (Figure 30). If resistance is not 5.0 ohms or less, the hold-in coil is open and the starter solenoid must be replaced.

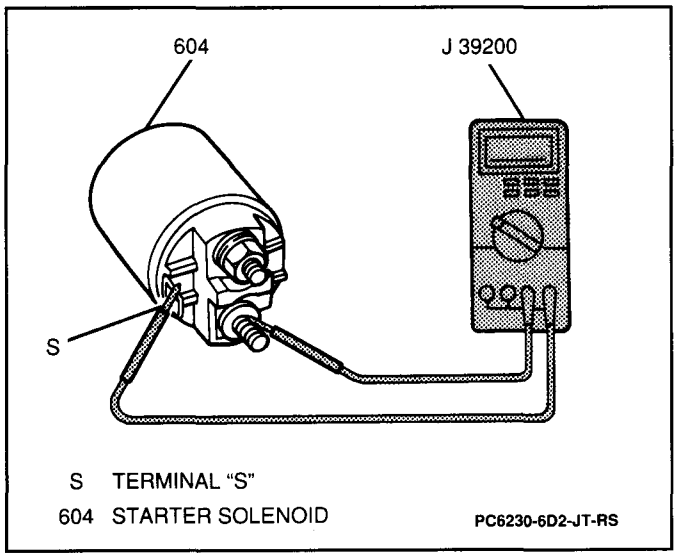

Figure 30 Measuring Starter Solenoid Hold-In Coil Resistance

Inspect

1. Pinion drive lever for wear; replace as necessary.

2. Overrunning clutch for wear, damage or other abnormal conditions. Check that the clutch locks when turned in the drive direction and rotates smoothly in the reverse direction (Figure 31). Replace as necessary.

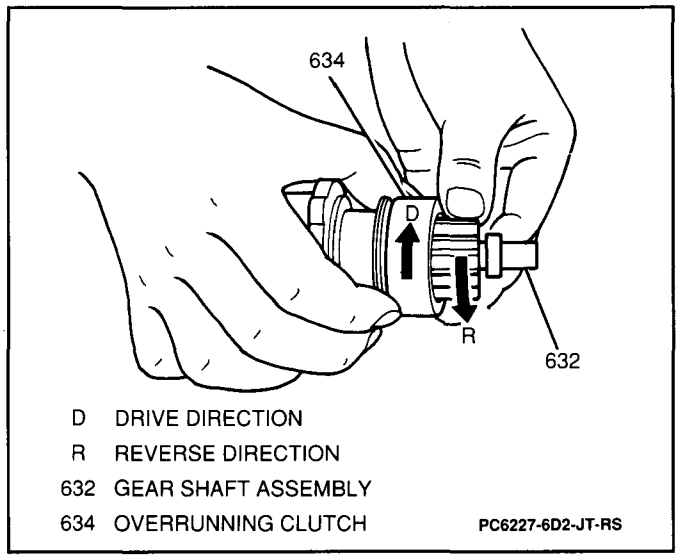

Figure 31 Inspecting Overrunning Clutch Operation

3. Overrunning clutch spline teeth for wear or damage; replace as necessary (Figure 32).

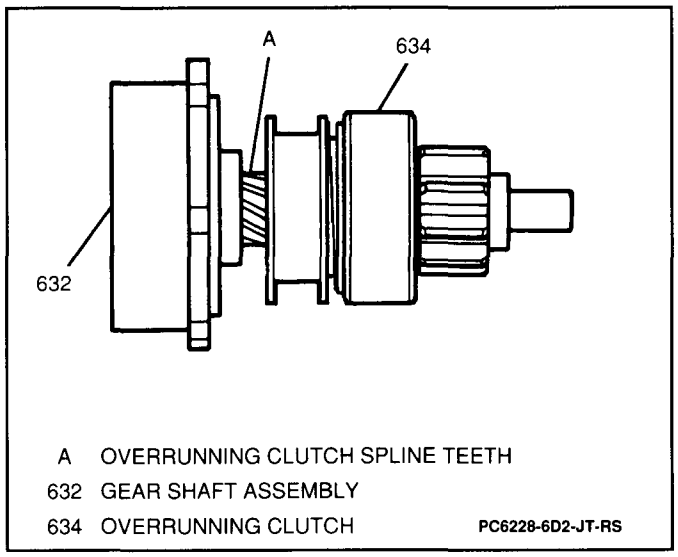

Figure 32 Inspecting Overrunning Clutch Spline Teeth

4. Armature bushing and bearing for wear and damage; replace as necessary (Figure 33).

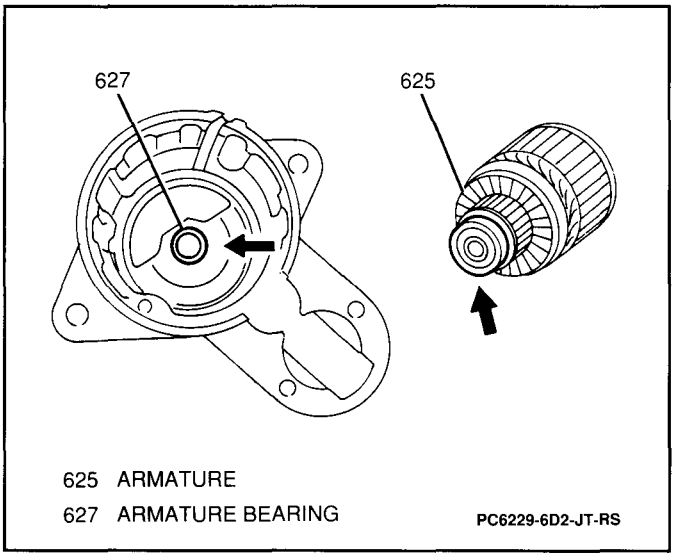

Figure 33 Inspecting Armature Bushing and Bearing

5. Starter solenoid plunger by pressing the plunger in and releasing it (Figure 34). If the plunger does not return to its original position quickly, the starter solenoid must be replaced.

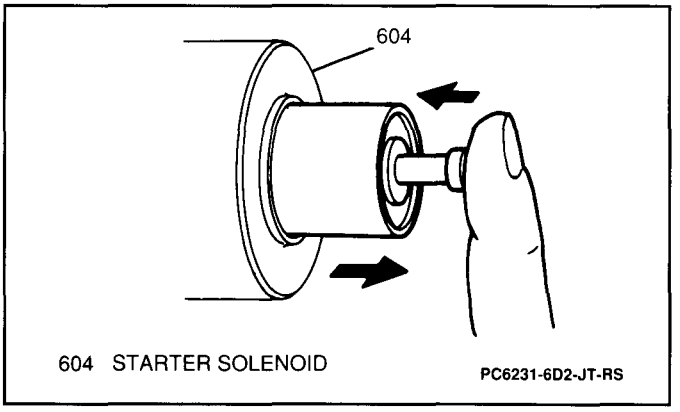

Figure 34 Inspecting Starter Solenoid Plunger Operation

6. Internal gear assembly and idle gears for wear, damage or other abnormal conditions; replace as necessary (Figure 35).

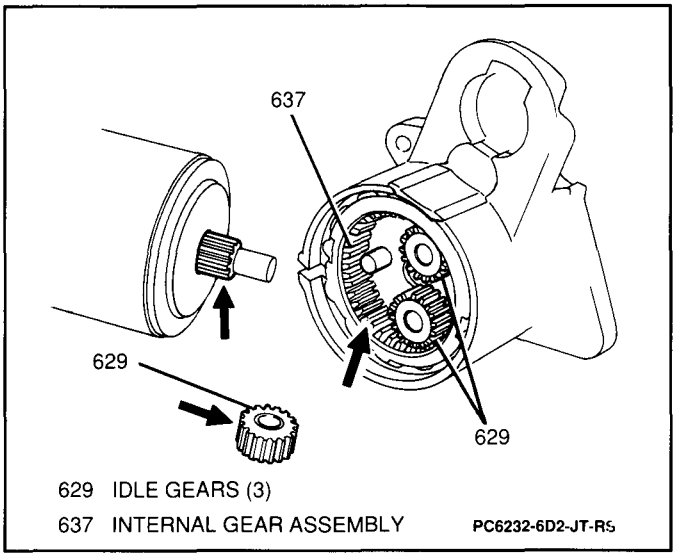

Figure 35 Inspecting Internal Gear Assembly and Idle Gears

7. Check the brush springs for corrosion or damage. Also check the brush holder and the insulation on the positive plates for wear. Replace components as needed.

STARTER ASSEMBLY

Install or Connect

1. Overrunning clutch to shaft; secure with new stop ring and retaining ring.
2. Motor gear shaft assembly and pinion drive lever to drive housing.
3. Pinion drive lever plate and seal to drive housing.
4. Idle gears and idle gear retainer to gear shaft assembly.

   NOTICE: If the armature bearing comes out during removal, apply grease to it and reinsert (Figure 15).

- Apply a light coating of Lubriplate lubricant GM P/N 1050109, or equivalent, to front and rear armature bearings.

5. Armature and starter motor yoke to drive housing.
6. Brushes, brush holder and spring washer to commutator end of armature, applying a light coating of Lubriplate lubricant GM P/N 1050109, or equivalant, to holder commutator end connection points.

7. Commutator end housing to drive housing; secure with two bolts and two screws.

Tighten

- Commutator end housing bolts to 30 N·m (22 lb.ft.).

8. Starter solenoid to starter motor assembly. Refer to "Solenoid Replacement" earlier in this section.

SPECIFICATIONS

FASTENER TORQUES

Starter Motor Assembly Lower Mounting Nut	30 N·m (22 lb.ft.)
Starter Motor Assembly Upper Mounting Bolt and Retaining Nut	30 N·m (22 lb.ft.)
Starter Solenoid Nut	15 N·m (11 lb.ft.)
Negative (-) Battery Cable-to-Negative (-) Battery Terminal Retainer	15 N·m (11 lb.ft.)
Field Coil Lead Wire Nut	15 N·m (11 lb.ft.)
Commutator End Housing Bolts	30 N·m (22 lb.ft.)

STARTER MOTOR USAGE

Voltage	12 volts
Output	
Manual Transmission	1.2 kwatts
Automatic Transmission	1.4 kwatts
Rating	30 seconds
Direction of Rotation	Clockwise (as viewed from pinion)
Number of Pinion Teeth	9
Starter Solenoid Operating Voltage	8 volts min.
Starter Motor Current Draw	
No-Load	
Manual Transmission	90 amps at 11 volts
Automatic Transmission	50 amps at 11 volts
Load	
Manual Transmission (9.1 N·m/80.5 lb.in. of torque)	300 amps at 7.7 volts
Automatic Transmission (10.4 N·m/92 lb.in. of torque)	300 amps at 7.7 volts
Locked Rotor	
Manual Transmission (18.6 N·m/13.8 lb.ft.)	780 amps at 4 volts
Automatic Transmission (25.5 N·m/18.8 lb.ft.)	980 amps at 4 volts
Commutator Run-Out	
Standard	0.05 mm (0.002 in.)
Limit (Maximum)	0.40 mm (0.016 in.)
Commutator Outside Diameter	
Standard	29.4 mm (1.157 in.)
Limit (Minimum)	28.8 mm (1.134 in.)
Commutator Insulation Depth	
Standard	0.50-0.80 mm (0.020-0.031 in.)
Limit (Minimum)	0.20 mm (0.47 in.)
Brush Length	
Standard	17.5 mm (0.69 in.)
Limit (Minimum)	12.0 mm (0.47 in.)
Brush Spring Tension	
Standard	1.9 kg (4.19 lbs.)
Limit (Minimum)	0.7 kg (1.54 lbs.)

SERVICE PARTS INFORMATION

Component Name Used in Section 6D2	Reference Name in Service Parts Catalog	Group Number
Armature	Armature, Strtr	2.043
Armature Bushing	Bearing, Strtr Amt Ctr	2.083
Brushes	Brush, Strtr	2.051
Brush Holder	Holder, Strtr Grd Brush	2.052
Brush Spring	Spring, Strtr Brush	2.053
Commutator End Housing	Cover, Strtr Cmtr End	2.067
Drive Housing	Housing, Start Mot Drv	2.085
Gear Shaft Assembly Bushing	Bearing, Strtr Drv Shf Drv End	2.083
Internal Gear Assembly	Gear, Eng Strtr Mot Pinion Clu (Inner)	2.086
Motor Gear Shaft	Shaft, Strtr Drv	2.086
Overrunning Clutch	Clutch, Strtr	2.086
Overrunning Clutch Retaining Ring	Retainer, Strtr Mot Clu Drv	2.086
Overrunning Clutch Stop Ring	Retainer, Strtr Mot Clu Drv	2.086
Pinion Drive Lever	Lever, Strtr Shft	2.108
Starter Motor Assembly	Motor, Strtr	2.041
Starter Motor Yoke	Frame, Strtr Mot (W/Coil)	2.049
Starter Solenoid	Switch, Strtr Sol	2.100

SPECIAL TOOLS

1
J 26900-13

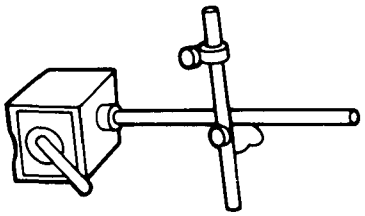

4
J 8001

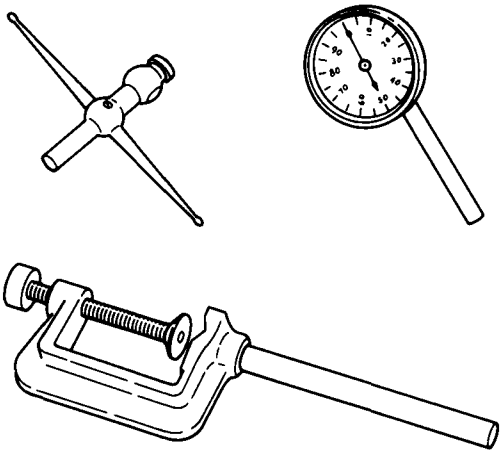

2
J 26900-5

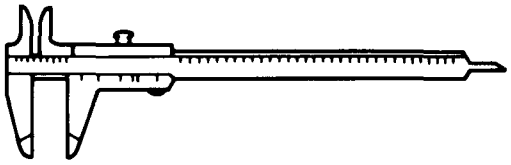

5
J 39200

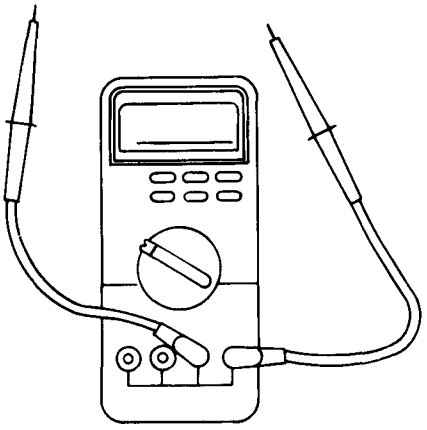

3
J 544-01

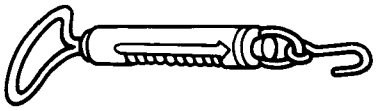

1 MAGNETIC BASE
2 VERNIER CALIPER
3 STEERING WHEEL TENSION SCALE
4 DIAL INDICATOR
5 DIGITAL MULTIMETER

PC6233-6D2-JT-RS

SECTION 6D3

CHARGING SYSTEM

CAUTION: Before removing or installing any electrical unit or when a tool or equipment could easily come in contact with "live" exposed electrical terminals, disconnect the negative (-) battery cable to help prevent personal injury and/or damage to the vehicle or components. Unless instructed otherwise, the ignition switch must be in the "OFF" or "LOCK" position.

NOTICE: When fasteners are removed, always reinstall them at the same location from which they were removed. If a fastener needs to be replaced, use the correct part number fastener for that application. If the correct part number fastener is not available, a fastener of equal size and strength (or stronger) may be used. Fasteners that are not reused, and those requiring thread-locking compound, will be called out. The correct torque values must be used when installing fasteners that require them. If the above procedures are not followed, parts or system damage could result.

CONTENTS

General Description 6D3-1
Generator 6D3-1
Diagnosis 6D3-1
Faulty Indicator Lamp Operation 6D3-1
Undercharged Battery 6D3-1
Overcharged Battery 6D3-2
Voltage Regulator Test 6D3-2
Noisy Generator 6D3-3
On-Vehicle Service 6D3-3
Generator Replacement 6D3-3
Unit Repair 6D3-6
Disassembly, Test and Reassembly 6D3-6
Specifications 6D3-12
Fastener Torques 6D3-12
Generator Usage 6D3-12
Drive Belt Tension 6D3-12
Service Parts Information 6D3-12
Special Tools 6D3-13

GENERAL DESCRIPTION

GENERATOR

All Geo Tracker models utilize an internal regulator charging system. The integrated circuit (IC) regulator is a solid state unit that is mounted inside the generator to the rear end frame. All regulator components are enclosed in a solid mold to protect them from heat and corrosive elements.

The generator rotor bearings contain enough grease to eliminate the need for periodic lubrication. Two brushes carry current through two slip rings to the field coil mounted on the rotor. Stator windings are assembled inside a laminated core that form part of the generator drive end frame. A rectifier bridge that contains 6 diodes is connected to stator windings. These diodes electrically change stator AC voltage into DC voltage. This DC voltage is then transmitted to the generator output terminal. Two neutral diodes are utilized to smooth out voltage fluctuations caused by varying generator speeds. A capacitor (condenser), mounted in the regulator, protects the rectifier bridge and neutral diodes. This capacitor also suppresses radio interference noise.

DIAGNOSIS

CAUTION: Never disconnect either battery terminal while the engine is running. Battery disconnection during engine operation will result in damage to electrical components.

FAULTY INDICATOR LAMP OPERATION

Check the charge indicator for normal operation. Refer to SECTION 8A-30. If the indicator is operating normally, proceed to the "Undercharged Battery" procedure in this section.

UNDERCHARGED BATTERY

Figure 1

Tool Required:
J 39200 Digital Multimeter

An undercharged battery is usually characterized by slow cranking or by a dark battery hydrometer. If this condition exists, check the following items for a cause:

1. Determine that the undercharged condition has not been caused by leaving accessories on for extended periods without charging the battery.
2. Check the drive belt for proper tension. Refer to "Generator Replacement" procedure later in this section.
3. If battery fault is suspected, refer to SECTION 6D1.
4. Inspect the wiring for faults. Check that all connections are clean and tight. Also check that all bulkhead connectors are tight and undamaged. Battery cable connections at the battery, starter and engine ground points should also be checked.

5. With all accessories turned off, connect a J 39200 across the battery. Run the engine at a moderate speed and check the voltage, taking into account the temperature the generator is exposed to during the test. As the temperature of the regulator case in the generator increases, the voltage output will decrease (Figure 1). The standard regulator voltage setting is 14.2 to 14.8 volts at 25°C (77°F). The minimum operating voltage should be 13.5 volts. If the voltage is at 13.5 volts or more, proceed to Step 6. If the voltage is less than 13.5 volts, remove the generator. Refer to "Generator Replacement" later in this section.

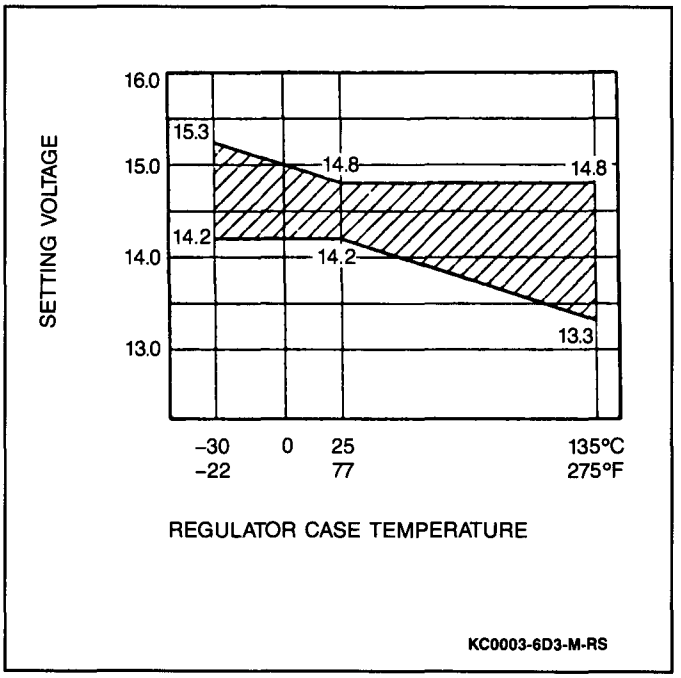

Figure 1 Regulator Setting Voltage — Voltage vs. Temperature

6. If Steps 1 through 5 have not produced satisfactory results, perform the following generator test:
   A. Disconnect the negative (-) battery cable.
   B. Remove the rubber protector, nut and generator battery terminal wire.
   C. Connect an ammeter between the generator and the disconnected wire. Connect the ammeter black lead to the wire and the ammeter red lead to the generator battery terminal.
   D. Connect a J 39200 between the generator battery terminal and chassis ground.
   E. Start and run engine at 2000 RPM. Turn all accessories and high-beam headlamps on. Turn the blower to HIGH. Ground the generator F terminal with a screwdriver.
   F. Adjust engine speed to obtain the maximum current output.
   G. If the current output is within 10 amperes of the maximum rating and the voltage reading is 13.5 to 16.0 volts, the generator is not faulty and is not the cause of an undercharged battery condition. Refer to "Generator Usage Chart" later in this section. If the current output is not within 10 amperes of the maximum rating, or the voltage reading is less than 13.5 volts, remove the generator. Refer to "Generator Replacement" later in this section.

OVERCHARGED BATTERY

1. Refer to SECTION 6D1 to determine the battery's condition.
2. If an obvious overcharge condition exists (as evidenced by spewing of electrolyte), check the field windings of the generator for shorts to grounds. If the field winding is faulty, replace the rotor and retest the generator for proper voltage output. Refer to "Disassembly, Test and Reassembly" later in this section.

VOLTAGE REGULATOR TEST

On-Vehicle

Tool Required:
J 39200 Digital Multimeter

1. Connect a fast charger and a J 39200 digital multimeter to the battery.
2. Turn the ignition switch to the "ON" position and slowly increase the charge rate. The charge indicator in the vehicle will begin to dim when the voltage setting is reached. The indicator should dim somewhere between 13.5 and 16.0 volts. If the test results are unsatisfactory , replace the voltage regulator. Refer to "Disassembly, Test and Reassembly" later in this section.

Off-Vehicle

Figure 1

Tool Required:
J 39200 Digital Multimeter

1. Remove the generator. Refer to "Generator Replacement" later in this section.
2. Remove the voltage regulator from the generator. Refer to "Disassembly, Test and Reassembly" later in this section.
3. Connect a J 39200 and a fast charger to a fully charged 12-volt battery.
4. Connect the voltage regulator battery terminal to the positive (+) battery terminal.

5. Connect a non-powered test lamp across the voltage regulator rotor terminals. If the test lamp lights, proceed to Step 6. If the test lamp does not light replace the voltage regulator. Refer to "Disassembly, Test and Reassembly" later in this section.
6. Turn the fast charger on. Observe the J 39200. The test lamp will begin to dim as the voltage regulator voltage setting is reached. The test lamp should go out at 13.5 to 16.0 volts. If the test results are satisfactory the voltage regulator is serviceable and should be reinstalled on the vehicle. If the test results are unsatisfactory, replace the voltage regulator. Refer to "Disassembly, Test and Reassembly" later in this section.

The test lamp is connected into the circuit exactly as the rotor would be when the regulator is inside the generator. The regulator interrupts the current to the test lamp when the regulator voltage setting is reached. Again, this voltage will vary slightly with temperature variations.

NOISY GENERATOR

Noise from a generator may be caused by a loose drive pulley, loose mounting bolts, worn or dirty bearings, or a defective stator. A high frequency whine (or magnetic noise) that is heard at full output is normal and should not be considered a generator failure.

ON-VEHICLE SERVICE

GENERATOR REPLACEMENT

Figures 2 and 3

Remove or Disconnect

1. Negative (-) battery cable from negative (-) battery terminal.

CAUTION: Failure to observe Step 1 may result in a serious personal injury. If a tool is shorted at the generator lead, the tool will become hot enough to cause a serious burn.

2. Two bolts, evaporative emission (EVAP) canister and mounting bracket from inner fender.
- Loosen two lower generator pivot mounting bolts.
3. Drive belt adjusting bolt from mounting bracket and drive belt from vehicle.
4. Generator electrical connector from back of generator (Figure 2).

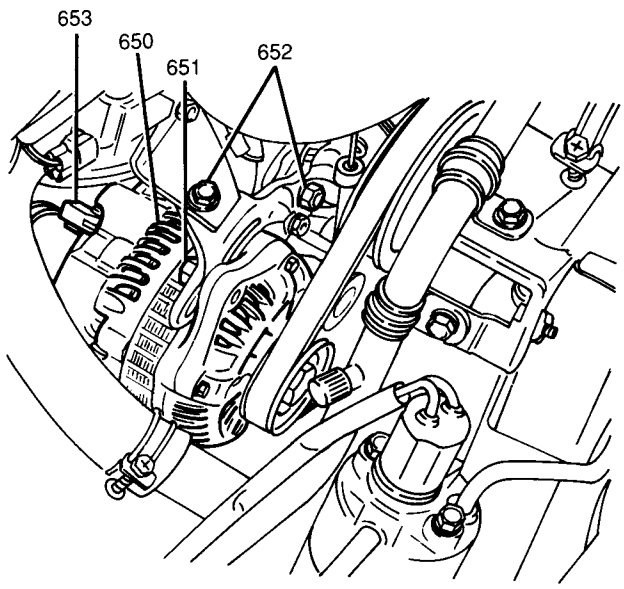

650 GENERATOR
651 DRIVE BELT ADJUSTING BOLT
652 GENERATOR MOUNTING BRACKET BOLTS
653 GENERATOR ELECTRICAL CONNECTOR
PC6302-6D3-JT-RS

Figure 2 Removing Generator

5. Rubber protector, nut and generator battery terminal wire from generator battery terminal.
6. Two upper generator mounting bracket bolts (Figure 2).
7. Two lower generator pivot mounting bolts and generator from vehicle.

Install or Connect

1. Generator to vehicle; secure with two lower generator pivot mounting bolts. Do not tighten fully.
2. Two upper generator mounting bracket bolts.

Tighten

- Generator upper mounting bracket bolts to 27 N·m (20 lb.ft.).

3. Drive belt adjusting bolt to upper mounting bracket. Do not tighten fully.

4. Drive belt to generator pulley.

Adjust

- Drive belt to obtain a 6 to 8 mm (0.24 to 0.31-inch) deflection with 10 kg (22 lbs.) pressure exerted when reinstalling a used belt (Figure 3).
- Drive belt to obtain a 5 to 7 mm (0.20 to 0.27-inch) deflection with 10 kg (22 lbs.) pressure exerted when reinstalling a new belt (Figure 3).

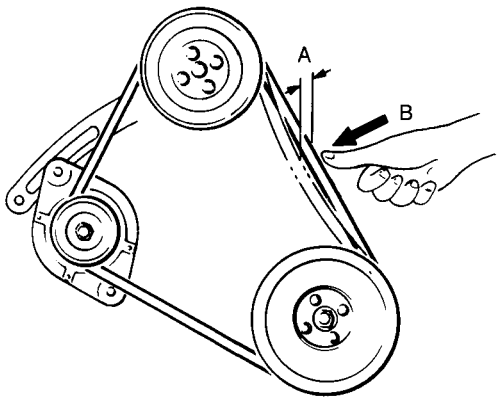

A USED BELT: 6–8 mm (0.24–0.31")
NEW BELT: 5–7 mm (0.20–0.27")

B 10 kg (22 lbs.)

NC0007-6D3-M-RS

Figure 3 Drive Belt Tension

Tighten

- Drive belt adjusting bolt to 33 N·m (24 lb.ft.).
- Generator lower pivot mounting bolts to 33 N·m (24 lb.ft.).

5. Generator electrical connector to back of the generator.
6. Generator battery terminal wire; secure with one nut.

Tighten

- Generator battery terminal retaining nut to 10 N·m (89 lb.in.).

- Reposition rubber protector over generator battery terminal.

7. EVAP canister and mounting bracket to inner fender; secure with two bolts.

Tighten

- EVAP canister mounting bracket bolts to 15 N·m (11 lb.ft.).

8. Negative (-) battery cable to negative (-) battery terminal.

Tighten

- Negative (-) battery cable-to-negative (-) battery terminal retainer to 15 N·m (11 lb.ft.).

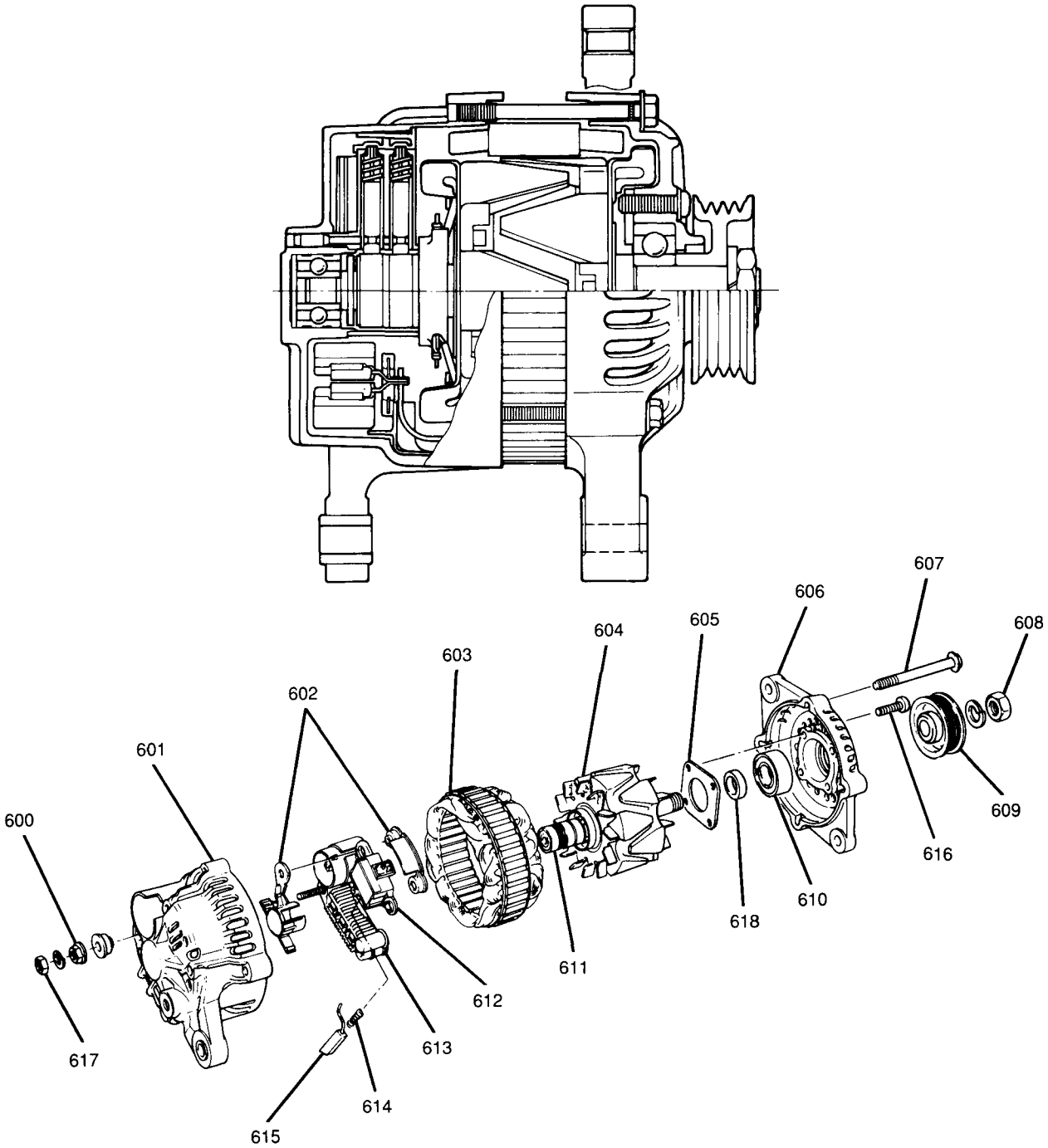

600 BATTERY TERMINAL RETAINING NUT
601 REAR HOUSING
602 BRUSH HOLDER
603 STATOR
604 ROTOR
605 FRONT BEARING RETAINER
606 FRONT HOUSING
607 GENERATOR HOUSING BOLT (4)
608 DRIVE PULLEY RETAINING NUT
609 DRIVE PULLEY
610 FRONT BEARING
611 REAR BEARING
612 REGULATOR
613 RECTIFIER
614 BRUSH SPRING (2)
615 BRUSH (2)
616 FRONT BEARING RETAINING SCREW (4)
617 "BAT" TERMINAL RETAINING NUT
618 FRONT BEARING SPACER

NC9201-6D3-M-RS

Figure 4 Generator Assembly

UNIT REPAIR

DISASSEMBLY, TEST AND REASSEMBLY

Figures 4 through 23

Remove or Disconnect

Tool Required:
J 22912-01 Bearing Remover

- Scribe matchmarks on the front and rear housing to ensure proper assembly (Figure 5).

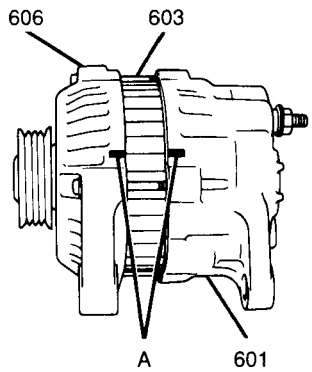

A GENERATOR HOUSING MATCHMARKS
601 REAR HOUSING
603 STATOR
606 FRONT HOUSING
NC9202-6D3-M-RS

Figure 5 Generator Housing Matchmarks

1. Four generator housing bolts from front housing (Figure 6).

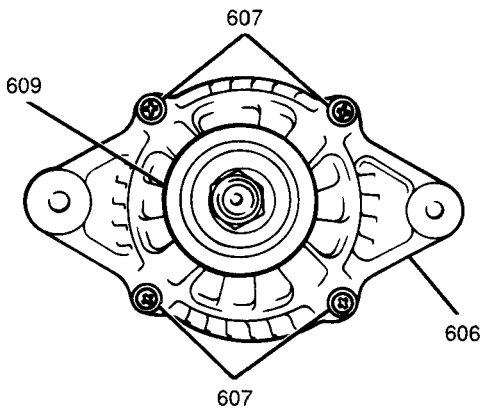

606 FRONT HOUSING
607 GENERATOR HOUSING BOLTS
609 DRIVE PULLEY
NC9203-6D3-M-RS

Figure 6 Generator Housing Bolts

- Using a flat-bladed tool, gently pry off the front housing (with drive pulley and rotor) from the stator coil and rear housing (Figure 7).

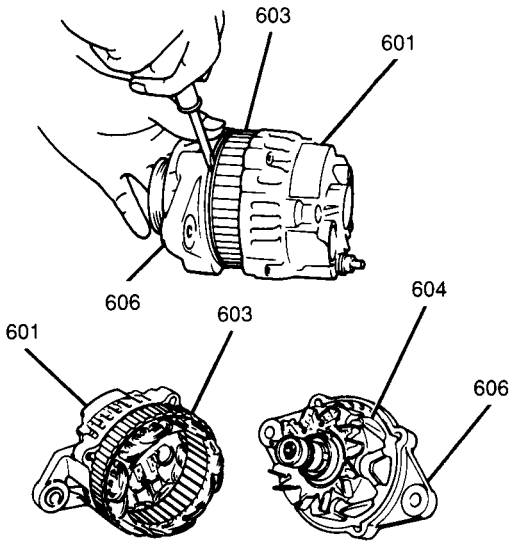

601 REAR HOUSING
603 STATOR
604 ROTOR
606 FRONT HOUSING
NC9204-6D3-M-RS

Figure 7 Removing Front Housing
(With Drive Pulley and Rotor)

- Place the front housing and rotor into a vise, facing the drive pulley up.

  NOTICE: To prevent damage to the rotor, place clean shop cloths between the rotor and vise.

2. Drive pulley retaining nut.
3. Drive pulley washer and drive pulley from rotor.
4. Front housing and rotor from vise.
5. Rotor and spacer from front housing.
6. Four screws, front bearing retainer and front bearing from front housing (Figure 8).

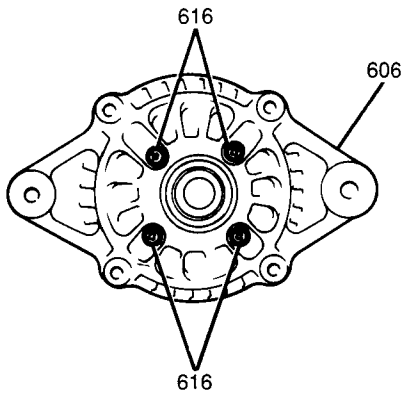

606 FRONT HOUSING
616 FRONT BEARING RETAINER SCREWS
NC9206-6D3-M-RS

Figure 8 Front Bearing Retainer Screws

7. Rear bearing from rotor using a J 22912-01 and a press (Figure 9).

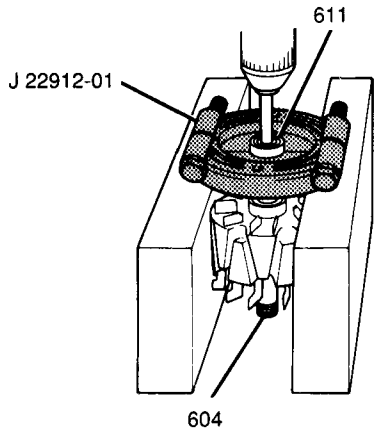

604 ROTOR
611 REAR BEARING
NC9207-6D3-M-RS

Figure 9 Removing Rear Bearing

8. Battery terminal retaining nut from rear housing (Figure 10).

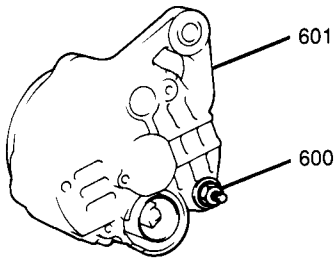

600 BATTERY TERMINAL RETAINING NUT
601 REAR HOUSING
NC9208-6D3-M-RS

Figure 10 Battery Terminal Retaining Nut

9. Stator leads from rectifer using a soldering iron.
10. Four retaining screws and stator from rear housing (Figure 11).

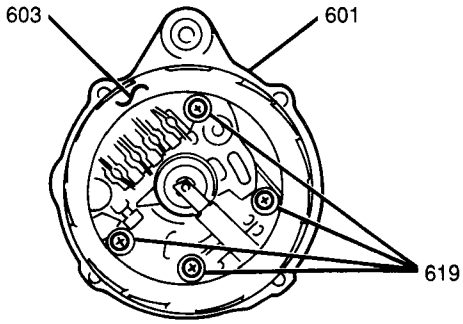

601 REAR HOUSING
603 STATOR
619 STATOR RETAINING SCREWS
NC9209-6D3-M-RS

Figure 11 Stator Retaining Screws

11. One nut and rectifier from rear housing.
12. Regulator and brush holder from rear housing.
13. Brush holder from regulator.
14. Brushes from regulator (Figure 12).
    A. Remove brush lead wire cover.
    B. Using a soldering iron, heat and disconnect brush lead wires from regulator terminals.
    C. Remove brushes and brush springs from regulator.

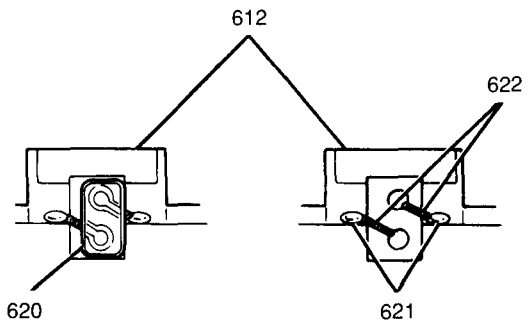

612 REGULATOR
620 BRUSH LEAD WIRE COVER
621 REGULATOR TERMINALS
622 BRUSH LEAD WIRES
NC9210-6D3-M-RS

Figure 12 Removing Brushes From Regulator

Measure

Tools Required:
J 39200 Digital Multimeter
J 26900-5 Vernier Caliper

1. Resistance between the rotor slip rings using a J 39200 (Figure 13). If resistance is greater than 3.5 ohms, replace the rotor.

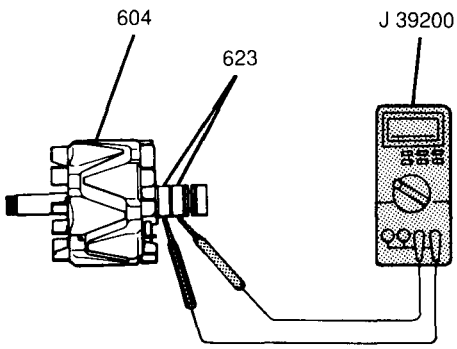

604 ROTOR
623 ROTOR SLIP RINGS
PC6303-6D3-JT-RS

Figure 13 Measuring Rotor Slip Ring Resistance

2. Resistance between the rotor slip ring and the rotor using the J 39200 (Figure 14). If resistance is less than 5 ohms, replace the rotor.

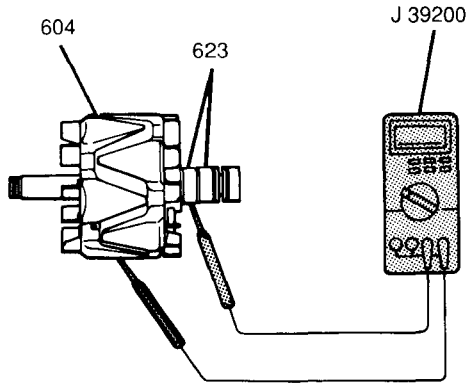

604 ROTOR
623 ROTOR SLIP RINGS
PC6304-6D3-JT-RS

Figure 14 Measuring Rotor Slip Ring-to-Rotor Resistance

3. Resistance between all stator leads using the J 39200 (Figure 15). If resistance is greater than 5 ohms for any measurement, replace the stator.

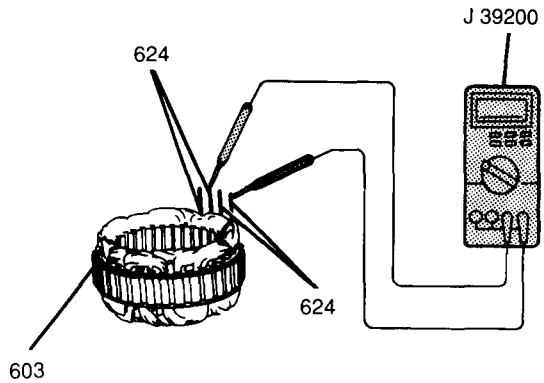

603 STATOR
624 STATOR LEADS
PC6305-6D3-JT-RS

Figure 15 Measuring Stator Lead Resistance

4. Resistance between all stator leads and the stator core using the J 39200 (Figure 16). If resistance is less than 5 ohms, replace the stator.

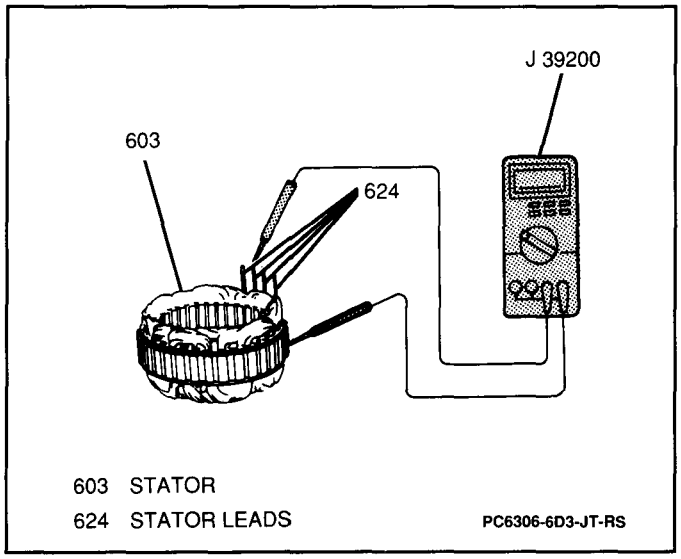

Figure 16 Measuring Stator Lead-to-Stator Core Resistance

5. Length of each brush using a J 26900-5. Standard brush length is 16 mm (0.63-inch) (Figure 17). If the length is more than 2 mm (0.08-inch) from the standard length, replace the brush.

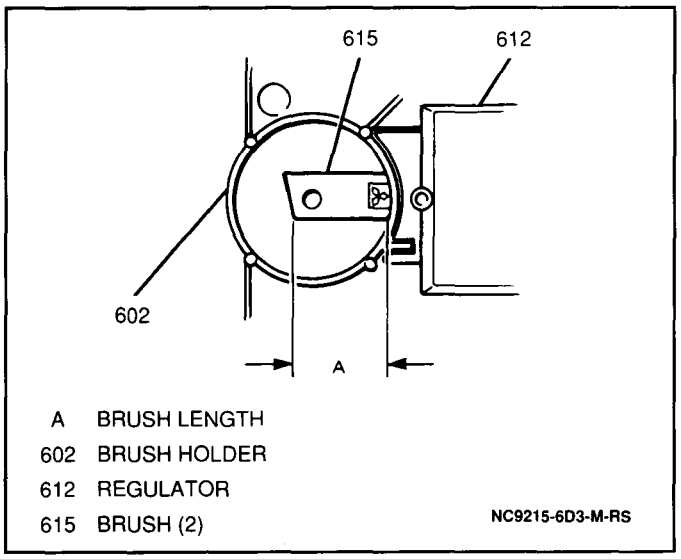

Figure 17 Measuring Brush Length

6. Resistance between rectifier upper body and each diode lead using the J 39200 (Figure 18). Reverse the probes and measure resistance again. If resistance is not less than 5 ohms in one measurement and greater than 5 ohms in the other measurement, replace the rectifier.

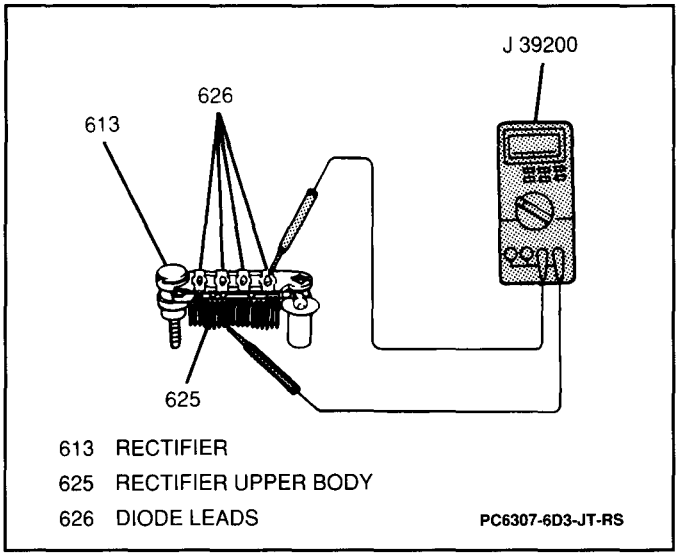

Figure 18 Measuring Rectifier Upper Body-to-Diode Lead Resistance

7. Resistance between rectifier lower body and each diode lead using the J 39200 (Figure 19). Reverse the probes and measure resistance again. If resistance is not less than 5 ohms in one measurement and greater than 5 ohms in the other measurement, replace the rectifier.

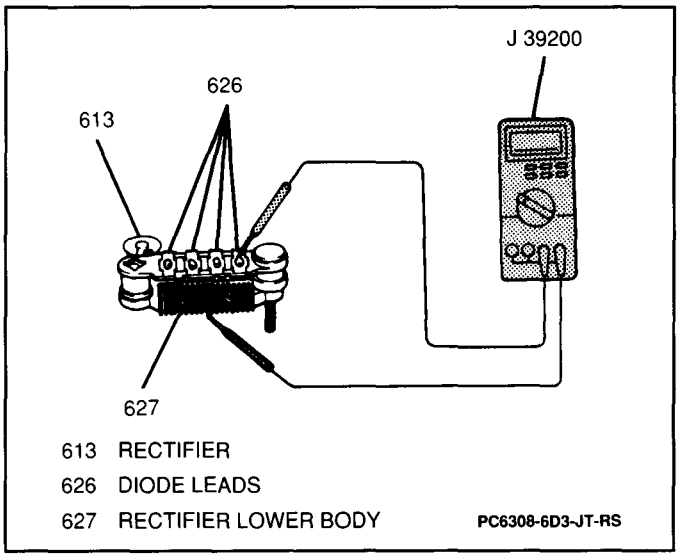

Figure 19 Measuring Rectifier Lower Body-to-Diode Lead Resistance

8. Resistance between both leads of each rectifier diode trio using the J 39200 (Figure 20). Reverse the probes and measure resistance again. If resistance is not less than 5 ohms in one measurement and greater than 5 ohms in the other measurement, replace the rectifier.

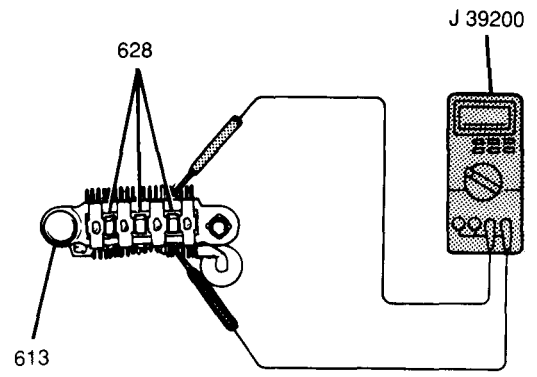

613 RECTIFIER
628 RECTIFIER DIODE TRIO
PC6309-6D3-JT-RS

Figure 20 Rectifier Diode Trio Resistance

9. Condenser capacity using a digital capacitor meter (Figure 21). If condenser capacity is not 0.5°F, replace the rectifier.

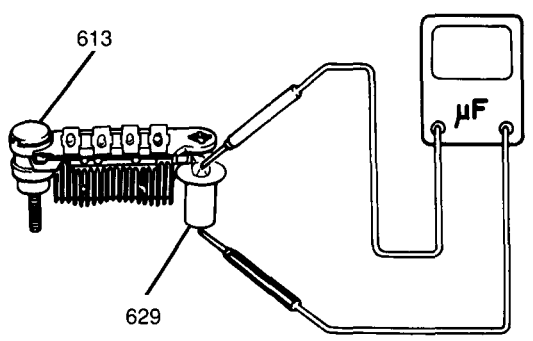

613 RECTIFIER
629 CONDENSER
NC9219-6D3-M-RS

Figure 21 Measuring Condenser Capacity

Inspect

- Rotor slip rings for roughness or scoring. If slip rings are rough or scored, replace the rotor.

Install or Connect

1. Brushes to regulator (Figure 22).
   A. Install brush springs and brushes to regulator so that the label on each brush is 2 to 3 mm (0.008 to 0.012-inch) from the rectifier.
   B. Solder brush lead wires to regulator terminals.
   C. Install brush lead wire cover.

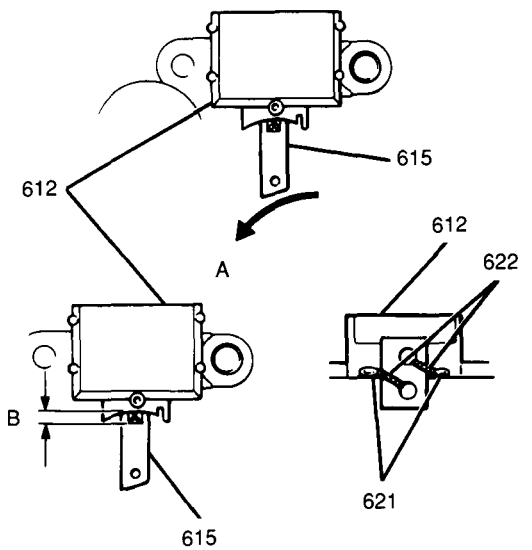

A ROTOR ROTATION DIRECTION
B 2-3 mm (0.008-0.012")
612 REGULATOR
615 BRUSH (2)
621 REGULATOR TERMINALS
622 BRUSH LEAD WIRES
NC9220-6D3-M-RS

Figure 22 Installing Brushes to Regulator

2. Brush holder to regulator.
3. Regulator and brush holder to rear housing.
- Remove hole plug from rear housing.
- Support brushes with a wire inserted through the hole in the rear housing (Figure 23).

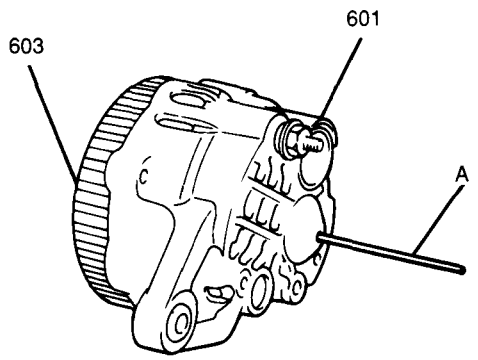

A BRUSH SUPPORT WIRE
601 REAR HOUSING
603 STATOR
NC9221-6D3-M-RS

Figure 23 Supporting Brushes With Wire

4. Rectifier to rear housing; secure with one nut.

Tighten

- Generator rectifier nut to 33 N·m (24 lb.ft.).

5. Stator to rear housing; secure with four retaining screws.

- Solder stator leads to rectifier.

6. Battery terminal retaining nut to rear housing.

Tighten

- Battery terminal retaining nut to 10 N·m (89 lb.in.).

7. Rear bearing to rotor.
8. Front bearing and front bearing retainer to front housing; secure with four screws.
9. Rotor with spacer to front housing.

- Place the front housing and rotor into a vise, facing the drive pulley end up.

NOTICE: To prevent damage to the rotor, place clean shop cloths between the rotor and vise.

10. Drive pulley and drive pulley washer to rotor; secure with retaining nut.

Tighten

- Drive pulley retaining nut to 65 N·m (48 lb.ft.).

- Remove the front housing and rotor from the vise.
- Using a heat gun, heat the rear housing to approximately 50 to 60°C (122 to 140°F).

11. Front housing (with drive pulley and rotor) to stator coil and rear housing, aligning generator housing matchmarks; secure with four generator housing bolts.

Tighten

- Generator housing bolts to 30 N·m (22 lb.ft.).

- Remove the brush support wire and install the hole plug into the rear housing.

Inspect

- Make sure that the rotor rotates smoothly by turning the drive pulley.

SPECIFICATIONS

FASTENER TORQUES

Generator Lower Pivot Mounting Bolts	33 N·m (24 lb.ft.)
Generator Upper Mounting Bracket Bolts	27 N·m (20 lb.ft.)
Drive Pulley Retaining Nut	65 N·m (48 lb.ft.)
Generator Housing Bolts	17 N·m (10 lb.ft.)
Drive Belt Adjusting Bolt	33 N·m (24 lb.ft.)
Battery Terminal Retaining Nut	10 N·m (89 lb.in.)
Negative (-) Battery Cable-to-Negative Battery Terminal Retainer	15 N·m (11 lb.ft.)
Evaporative Emissions (EVAP) Canister Mounting Bracket Bolts	15 N·m (11 lb.ft.)
Generator Rectifier Nut	33 N·m (24 lb.ft.)

GENERATOR USAGE CHART

Normal Operating Voltage	12 Volts
Maximum Generator Output	55 amps
Polarity	Negative (-) Ground
No-Load Generator Speed	1100 rpm
Regulator Voltage	14.7 - 15.0 Volts
Direction of Rotation	Clockwise as viewed from pulley side
Maximum Generator Speed	18,000 rpm
Temperature Range	30 to 90°C (-22 to 194°F)
Brush Length	
Standard	16 mm (0.63 in.)
Limit (Minimum)	2 mm (0.08 in.)
Condenser Capacity	0.5 uF

DRIVE BELT TENSION

Drive Belt Deflection (New Belt)	5-7 mm (0.20-0.27 in.) 10 Kg (22 lbs.)
Drive Belt Deflection (Used Belt)	6-8 mm (0.24-0.31 in.) 10 Kg (22 lbs.)

SERVICE PARTS INFORMATION

Component Name Used in Section 6D3	Reference Name in Service Parts Catalog	Group Number
Generator	Generator (Complete)	2.275
Generator Pulley	Pulley, Gen	2.274
Generator Pulley Nut	Nut, Gen Pul	2.280
Generator Rotor	Rotor, Gen	2.279
Brush	Brush, Gen	2.285
Brush Spring	Spring, Gen Brush	2.286
Brush Holder	Brush, Gen	2.285
Bearing Cover	Bushing, Gen Rectifier Stay	2.298
Bearing Retainer	Retainer, Gen Rot Dr End Brg	2.307
Drive End Frame	Frame, Gen Dr End	2.305
Drive End Bearing	Bearing, Gen Rot Dr End	2.306
Front Housing	Frame, Gen Drive End	2.305
Front Bearing	Bearing, Gen Rot Dr End	2.306
End Housing Bearing	Bearing, Gen Rot Shf Slp Ring	2.298
Insulator	Insulator, Gen Rectifier	2.319
Rear Housing	Frame, Gen Slip Ring End	2.297
Rear Bearing	Bearing, Gen Rot Dr End	2.306
Regulator	Regulator, Gen Volt	2.500
Rear End Cover	Frame, Gen Slip Ring End	2.297
Generator Stator	Stator, Gen	2.310
Generator Rectifier	Rectifier, Gen	2.319
Generator Rectifier Nut	Nut, Gen Rectifier	2.319
Generator Mounting Bracket	Bracket, Gen	2.277

SPECIAL TOOLS

1
J 22912-01

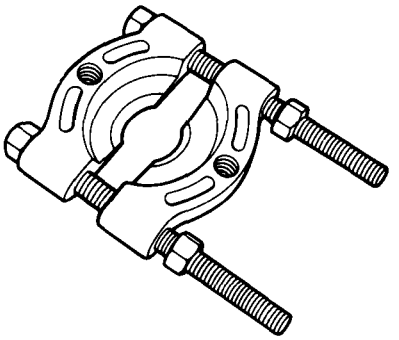

3
J 39200

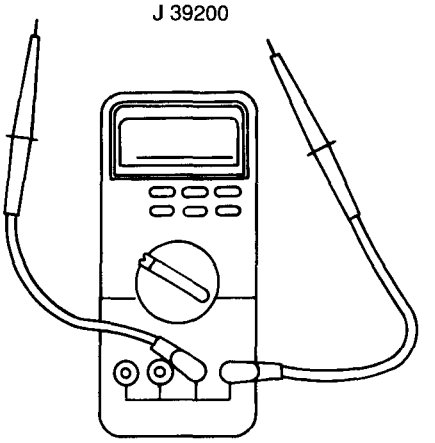

2
J 26900-5

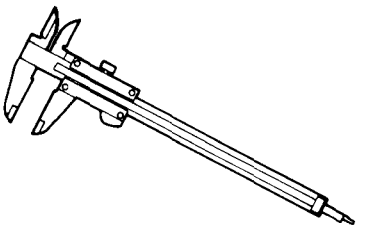

4
J 28509-A

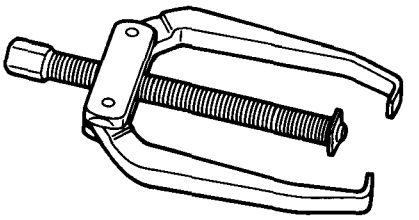

5
J 38276

1 BEARING REMOVER
2 VERNIER CALIPER
3 DIGITAL MULTIMETER
4 PULLER
5 PULLER ADAPTER

PC6310-6D3-JT-RS

SECTION 6D4

IGNITION SYSTEM

NOTICE: When fasteners are removed, always reinstall them at the same location from which they were removed. If a fastener needs to be replaced, use the correct part number fastener for that application. If the correct part number fastener is not available, a fastener of equal size and strength (or stronger) may be used. Fasteners that are not reused, and those requiring thread-locking compound, will be called out. The correct torque values must be used when installing fasteners that require them. If the above procedures are not followed, parts or system damage could result.

CONTENTS

General Description 6D4-1
Distributor Ignition System 6D4-1
Secondary Wiring 6D4-2
Spark Plugs 6D4-2
Ignition Switch 6D4-4
Diagnosis 6D4-4
Ignition System 6D4-4
Spark Plugs 6D4-4
On-Vehicle Service 6D4-6
Service Precautions 6D4-6
Secondary Wiring Replacement 6D4-6
Spark Plug Replacement 6D4-6
Noise Suppressor Condenser 6D4-7
Noise Suppressor Filter 6D4-7
Distributor Replacement 6D4-8
If Distributor Position Was Lost 6D4-9
Ignition Coil Replacement 6D4-9
Igniter 6D4-10
Ignition Timing 6D4-10
Unit Repair 6D4-10
Distributor Disassembly, Test and Reassembly 6D4-11
Specifications 6D4-13
Fastener Torques 6D4-13
Ignition System 6D4-13
Service Parts Information 6D4-13
Special Tools 6D4-14

GENERAL DESCRIPTION

The ignition circuit consists of the battery, distributor, ignition switch, igniter, spark plugs and primary and secondary wiring. This vehicle uses an ignition control (IC) system which is monitored and controlled by the engine control module (ECM).

DISTRIBUTOR IGNITION SYSTEM

Figure 1

The distributor used within the ignition system consists of a signal generator (signal rotor and camshaft position [CMP] sensor) and rotor. All spark timing changes in the distributor are performed electronically by the ECM. The ECM monitors information from various engine sensors, computes desired spark timing, and signals the distributor to change the timing accordingly. No vacuum or mechanical advance mechanisms are used. The ignition system also includes a noise suppressor condenser and noise suppressor filter to eliminate ignition sound. The noise suppressor filter also provides the tachometer (if equipped) with an ignition signal.

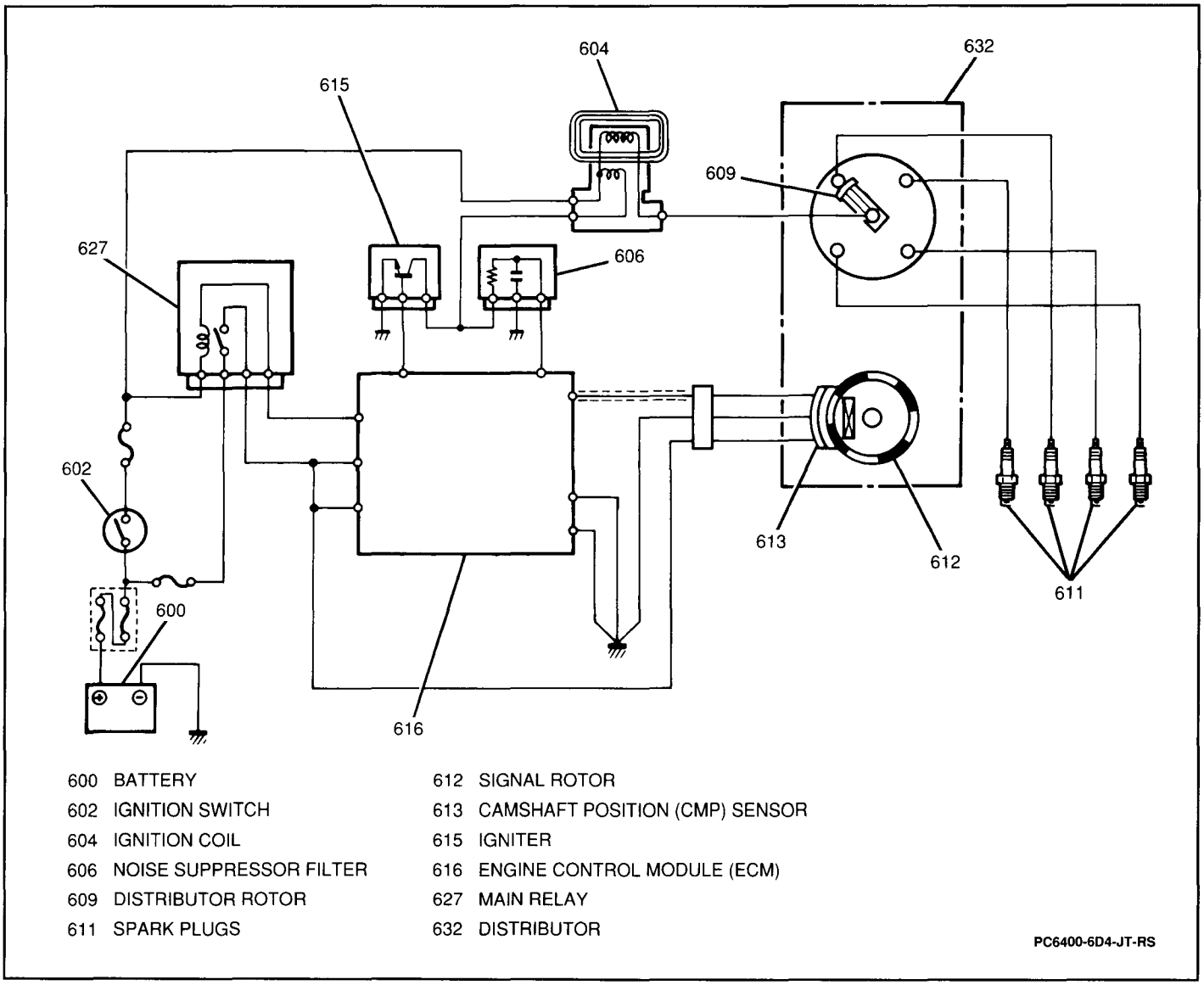

Figure 1 Ignition Control (IC) System

SECONDARY WIRING

The spark plug wiring used with the ignition system withstands high temperatures and provides an excellent insulator for the high voltages produced by the ignition system. The spark plug boot forms a tight seal on the spark plug. The boot should always be twisted one-half turn before removing the spark plug wire.

SPARK PLUGS

Figure 2

This vehicle should be serviced with NGK Type BPR5ES or Nippondenso Type W16EXR-U spark plugs. The spark plug gap should be set to 0.71 mm (0.028-inch).

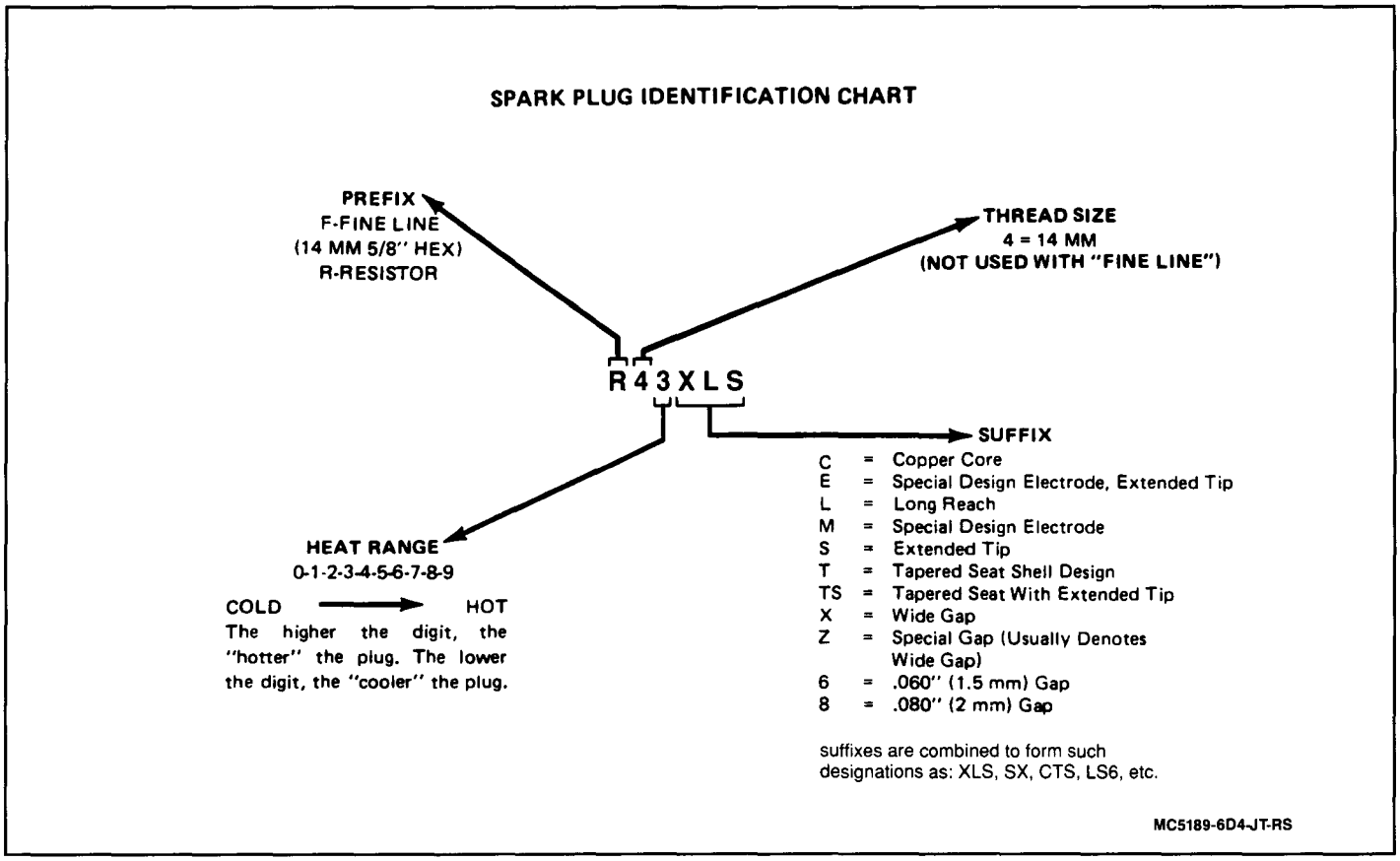

Figure 2 Spark Plug Identification Chart (Typical)

Normal service is assumed to be a mixture of idling, slow-speed and high-speed driving. Occasional or intermittent highway driving is needed for good spark plug performance. The higher combustion temperatures generated during highway driving burn away any deposits of carbon or oxides that have built up from frequent idling or continual stop-and-go driving. Spark plugs are protected by an insulating nipple made of special heat-resistant material, which covers the spark plug terminal and extends downward over a portion of the plug insulator. These nipples prevent flash-over which causes engine misfire. Do not mistake corona discharge for flash-over, or a shorted insulator. Corona discharge is a steady blue light appearing around the insulator, just above the shell crimp. It is the visible evidence of a high-tension field and has no effect on ignition performance.

Spark plugs must operate within certain temperature limits if they are to provide the performance and service life expected. The spark plug selected for an engine is based on the normal engine service and may not perform satisfactorily under other than normal operating conditions. For almost exclusive city driving, a spark plug one step higher in heat range might deliver longer service life than the spark plug recommended. Conversely, a spark plug one step colder will perform better for heavy loads or continual high-speed driving.

There are three rules to follow when selecting spark plugs for an engine in good condition:

1. Choose a spark plug within the specified heat range.
2. If spark plug overheating occurs, select a spark plug that is one heat range lower than the specified heat range.
3. If fouling is a problem, select a spark plug that is one heat range higher then the specified heat range.

IGNITION SWITCH

The ignition switch is located on the right side of the steering column below the steering wheel. The electrical and mechanical portions of the switch work in conjunction with each other. For more information regarding the ignition switch and the key and lock cylinder, refer to SECTIONS 3F1 and 3F2.

DIAGNOSIS

IGNITION SYSTEM

Refer to SECTION 6E for ignition control (IC) system diagnostic procedures.

SPARK PLUGS

Figure 3

Worn or dirty spark plugs provide satisfactory performance at idle speed, but under more demanding operating conditions, they will frequently misfire. Conditions such as poor fuel economy, power loss, loss of speed, hard starting and generally poor engine performance may be the result of misfiring spark plugs. Spark plugs may misfire due to carbon fouling, an excessive air gap, a broken insulator, bridged electrodes or a damaged spark plug wire and/or boot.

Fouled spark plugs are indicated by black carbon deposits on electrodes. These black deposits are usually the result of slow-speed driving and short runs in which sufficient operating temperature is seldom achieved. Carbon deposits will also result because of worn pistons, rings, faulty ignition, over-rich air/fuel mixture and the incorrect spark plug heat range.

Carbon deposits on the spark plug insulator tip may become conductive and cause the high-voltage arc to track along the tip to some point where it arcs to join the spark plug shell. This arc ignites the air/fuel mixture later than normal which, in effect, retards ignition timing. Heavy carbon deposits may be conductive to the extent that the arc path now becomes a shunt path to the spark plug shell. This condition prevents the high voltage from arcing and igniting the air/fuel mixture. Once arc tracking occurs, the spark plug may be permanently damaged and must be replaced.

Excessive gap wear on plugs of low mileage usually indicates the engine is operating at higher speeds than those for which the engine was designed or that the spark plug's heat range is too high. Electrode wear may also be the result of spark plug overheating caused by combustion gases leaking past the threads. Electrode wear can become excessive to the point that the high voltage no longer arcs across the electrodes.

Broken or cracked insulators are usually the result of improper installation. Broken lower insulators often result from improper gapping and are usually visible immediately. When gapping a spark plug, always make the gap adjustment by bending the ground (side) electrode. Spark plugs with broken insulators must always be replaced.

Damaged spark plug wires and/or boots cause a similar condition to that of a cracked insulator. The high-voltage arc flashes through the wire or boot and grounds on the spark plug shell or the engine.

Spark plugs are protected by an insulating boot comprised of heat-resistant material which covers the spark plug terminal and extends downward over a portion of the spark plug insulator. These boots prevent the flash-over that causes engine misfiring.

Corona discharge, a steady blue light, may repel dust particles and leave a clear ring on the insulator just above the shell. It is important not to mistake corona discharge as evidence that combustion gases have blown between the shell and the insulator. Corona discharge is the visible evidence of a high-tension field and has no effect on ignition system performance.

Tracking Arc
High voltage arcs between a fouling deposit on the insulator tip and spark plug shell. This ignites the fuel/air mixture at some point along the insulator tip, retarding the ignition timing which causes a power and fuel loss.

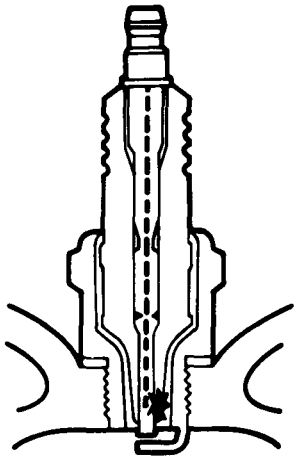

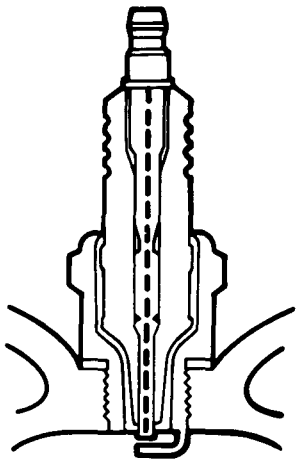

Wide Gap
Spark plug electrodes are worn so that the high voltage charge cannot arc across the electrodes. Improper gapping of electrodes on new or "cleaned" spark plugs could cause a similar condition. Fuel remains unburned and a power loss results.

Flashover
A damaged spark plug boot, along with dirt and moisture, could permit the high voltage charge to short over the insulator to the spark plug shell or the engine. AC's buttress insulator design helps prevent high voltage flashover.

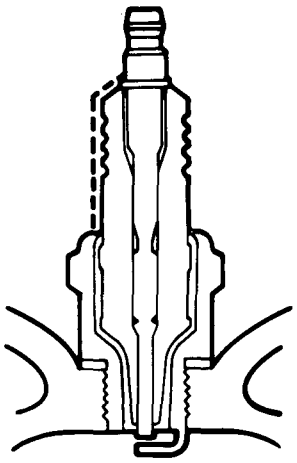

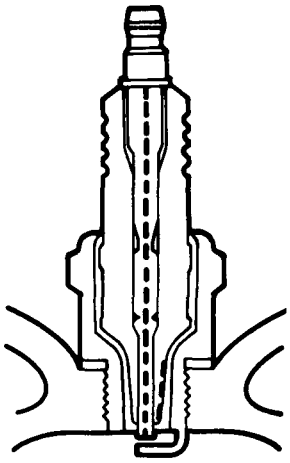

Fouled Spark Plug
Deposits that have formed on the insulator tip may become conductive and provide a "shunt" path to the shell. This prevents the high voltage from arcing between the electrodes. A power and fuel loss is the result.

Bridged Electrodes
Fouling deposits between the electrodes "ground out" the high voltage needed to fire the spark plug. The arc between the electrodes does not occur and the fuel air mixture is not ignited. This causes a power loss and exhausting of raw fuel.

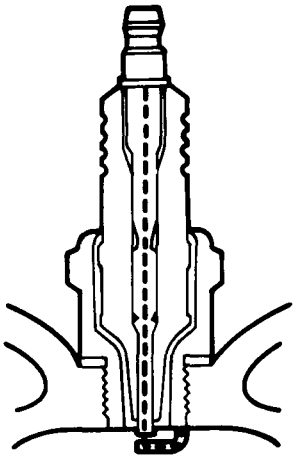

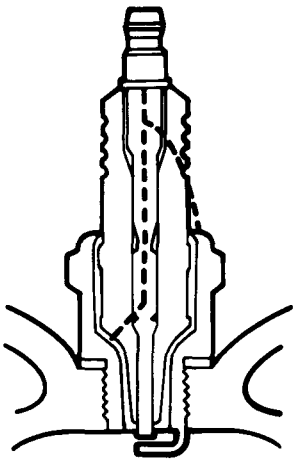

Cracked Insulator
A crack in the spark plug insulator could cause the high voltage charge to "ground out." Here, the spark does not jump the electrode gap and the fuel air mixture is not ignited. This causes a power loss and raw fuel is exhausted.

PC6401-6D4-M-RS

Figure 3 Spark Plug Diagnosis

ON-VEHICLE SERVICE

SERVICE PRECAUTIONS

1. When making compression checks, disconnect the ignition coil connector. To prevent damage to the locking tab on the ignition coil, do not use a screwdriver to release the locking tab.
2. Periodic lubrication of the distributor is not required.
3. The material used to construct the secondary (spark plug) wiring is very soft. This allows the wiring to withstand more heat and carry a higher voltage than traditional wiring; however, the wire is more susceptible to scuffing and damage. The secondary wires must be routed correctly to prevent chafing or cutting. When removing a secondary wire from a spark plug, a distributor or an ignition coil, twist the boot one-half turn and pull on the boot only.

SECONDARY WIRING REPLACEMENT

Figure 4

Remove or Disconnect

1. Negative (-) battery cable.
2. Secondary (coil) wire from ignition coil.
3. Secondary (spark plug) wire(s) from wire retainers.
4. Secondary (spark plug) wire(s) from spark plugs (Figure 4).

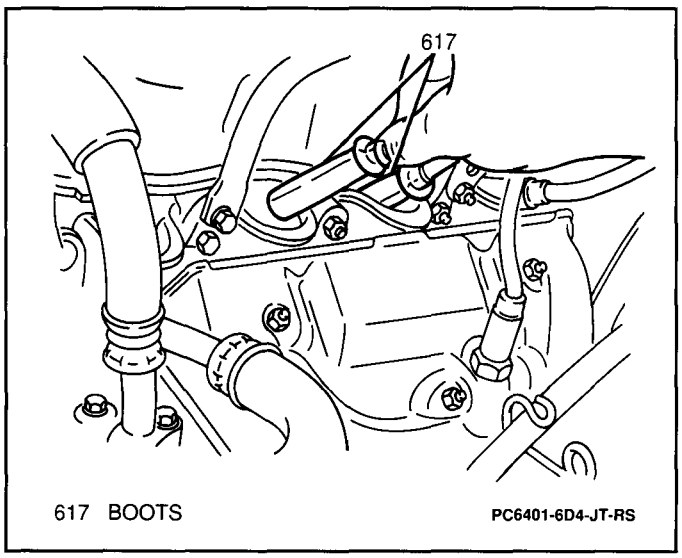

Figure 4 Secondary Wire Replacement

5. Secondary (spark plug and coil) wire(s) from distributor cap.

Important

- Note wire placement to cap and routing to engine so as to maintain correct firing order and proper clearances to engine parts that could cause damage to wiring.

Install or Connect

1. Secondary (spark plug and coil) wire(s) to distributor cap.
2. Secondary (spark plug) wire(s) to spark plugs.
   - Reposition secondary (spark plug) wires and insert into secondary wire retainers.
3. Secondary (coil) wire to ignition coil.
4. Negative (-) battery cable.

Tighten

- Negative (-) battery cable-to-negative (-) battery terminal retainer to 15 N·m (11 lb.ft.).

SPARK PLUG REPLACEMENT

Figures 5 and 6

NOTICE: This engine is equipped with an aluminum cylinder head. Allow the engine to cool before removing spark plugs. Removing the spark plugs from an engine at operating temperature may damage the spark plug threads in the cylinder head.

Remove or Disconnect

1. Negative (-) battery cable.
2. Secondary (spark plug) wire(s) from spark plug(s).
3. Spark plug(s) from cylinder head (Figure 5).

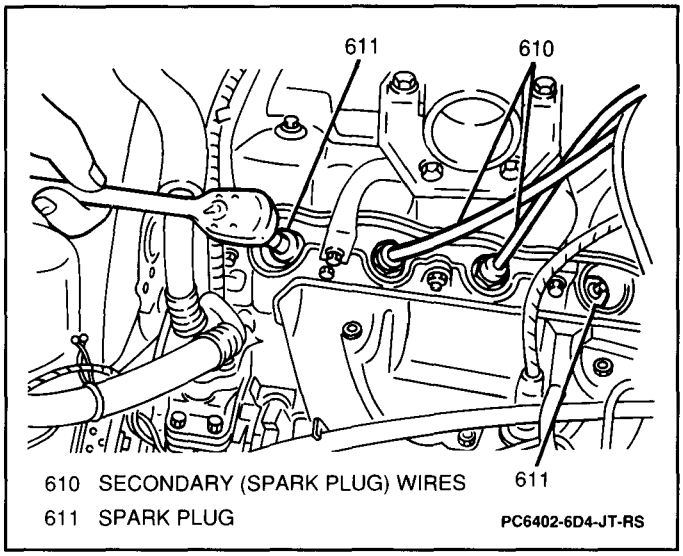

Figure 5 Removing Spark Plugs

Inspect

- Spark plug(s) for electrode wear, carbon deposits and insulator damage. Refer to "Spark Plugs" earlier in this section.

Install or Connect

Important

- Use NGK Type BPR5ES or Nippondenso Type W16EXR-U spark plugs.
- Set spark plug gap to 0.71 mm (0.028-inch) (Figure 6).

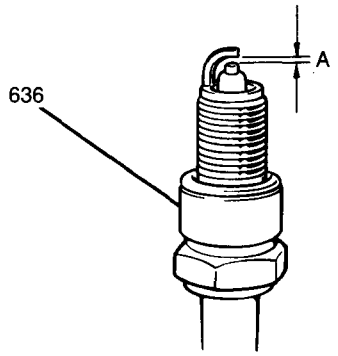

A 0.71mm (0.028")
636 SPARK PLUG
PC6403-6D4-JT-RS

Figure 6 Spark Plug Gap

1. Spark plug(s) to cylinder head.

Tighten

- Spark plug to 28 N·m (21 lb.ft.).

2. Secondary (spark plug) wire(s) to spark plug(s).
3. Negative (-) battery cable.

Tighten

- Negative (-) battery cable-to-negative (-) battery terminal retainer to 15 N·m (11 lb.ft.).

NOISE SUPPRESSOR CONDENSER

Figure 7

Remove or Disconnect

1. Negative (-) battery cable.
2. Noise suppressor condenser electrical connectors (Figure 7).

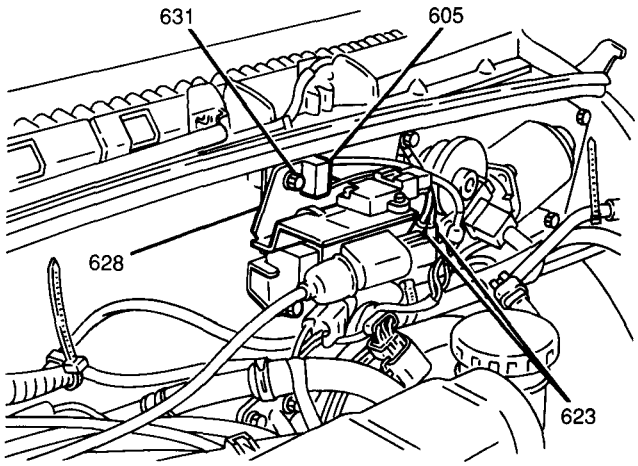

605 NOISE SUPPRESSOR CONDENSER
623 NOISE SUPPRESSOR CONDENSER ELECTRICAL CONNECTORS
628 IGNITION COIL MOUNTING BRACKET
631 IGNITION COIL MOUNTING BRACKET BOLT
PC6404-6D4-JT-RS

Figure 7 Noise Suppressor Condenser

3. One bolt and noise suppressor condenser from ignition coil mounting bracket (Figure 7).

Install or Connect

1. Noise suppressor condenser to ignition coil mounting bracket; secure with one bolt.

Tighten

- Ignition coil mounting bracket bolt to 20 N·m (15 lb.ft.).

2. Noise suppressor condenser electrical connectors.
3. Negative (-) battery cable.

Tighten

- Negative (-) battery cable-to-negative (-) battery terminal retainer to 15 N·m (11 lb.ft.).

NOISE SUPPRESSOR FILTER

Figure 8

Remove or Disconnect

1. Negative (-) battery cable.
2. Noise suppressor filter from bulkhead (Figure 8).

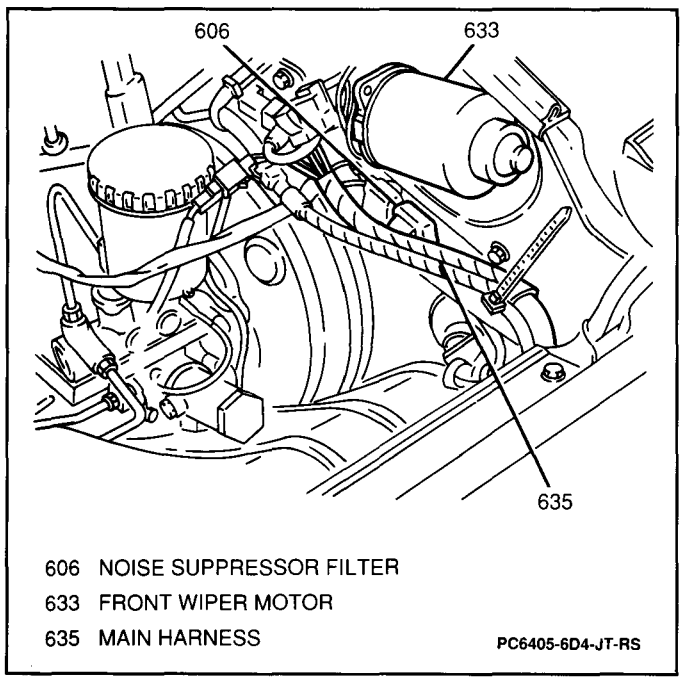

Figure 8 Noise Suppressor Filter

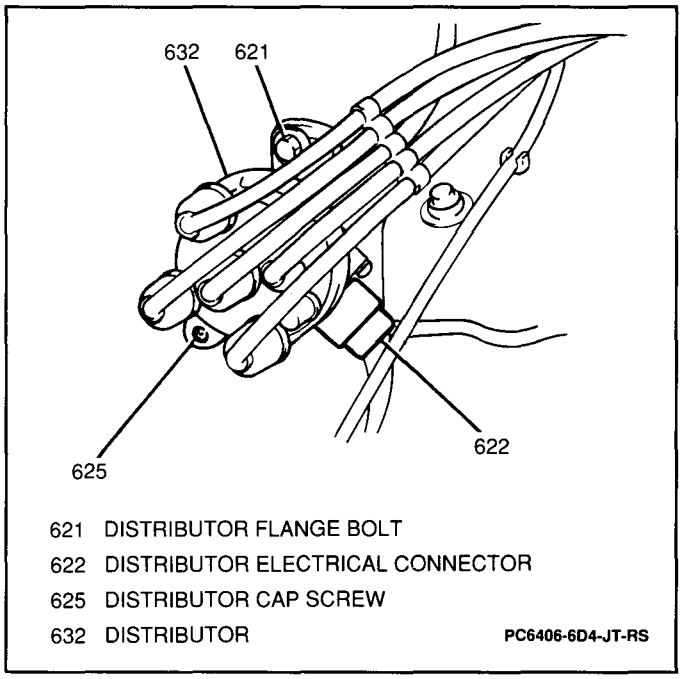

Figure 9 Distributor Flange Bolt

3. Electrical tape and noise suppressor filter from main harness.
4. Noise suppressor filter electrical connector.

Install or Connect

1. Noise suppressor filter electrical connector.
2. Noise suppressor filter to main harness; secure with electrical tape.
3. Noise suppressor filter to bulkhead.
4. Negative (-) battery cable.

Tighten

- Negative (-) battery cable-to-negative (-) battery terminal retainer to 15 N·m (11 lb.ft.).

DISTRIBUTOR REPLACEMENT

Figure 9

Remove or Disconnect

1. Negative (-) battery cable.
2. Distributor electrical connector (Figure 9).
3. Two screws and distributor cap from distributor (Figure 9).
- Mark the distributor housing position on the cylinder head.
4. Distributor flange bolt and distributor housing from cylinder head (Figure 9).
- Mark the distributor coupling position on the distributor housing.

Inspect

- Distributor cap and rotor for cracks, terminal corrosion and wear; replace as necessary.

Install or Connect

1. Distributor housing to cylinder head. Match the marks made on the cylinder head and distributor housing during removal. Also match the distributor coupling and housing alignment marks.
2. Distributor flange bolt. Do not tighten fully.
3. Distributor cap to distributor; secure with two screws.
4. Distributor electrical connector.
5. Negative (-) battery cable.

Tighten

- Negative (-) battery cable-to negative (-) battery terminal retainer to 15 N·m (11 lb.ft.).

6. Set ignition timing. Refer to SECTION 6E2.

IF DISTRIBUTOR POSITION WAS LOST

Tool Required:
J 22794 Spark Plug Port Adapter

If the engine was accidentally cranked after the distributor was removed, the following procedure can be used to properly position the distributor.

1. Crank the engine until the number one cylinder is at top dead center (TDC) on its compression stroke. This can be accomplished by the following:
   A. Remove the fuel pump relay.
   B. Remove the number one spark plug. Refer to "Spark Plug Replacement" earlier in this section.
   C. Install a J 22794 and a compression gage into the spark plug cavity.
   D. Crank the engine and observe the compression gage. The TDC of the cylinder's compression stroke occurs when the compression reading is highest.
2. Align the timing mark on the crankshaft pulley to the zero (0) position on the timing indicator.
3. Position the rotor to the number one cylinder position.
4. Install the distributor. Refer to "Distributor Replacement" earlier in this section.
5. Remove the J 22794 and the compression gage.
6. Install the number one spark plug.

Tighten

- Spark plug to 28 N·m (21 lb.ft.).

7. Install fuel pump relay.
8. Set ignition timing. Refer to SECTION 6E2.

IGNITION COIL REPLACEMENT

Figure 10

Remove or Disconnect

1. Negative (-) battery cable.
2. Ignition coil electrical connector (Figure 10).

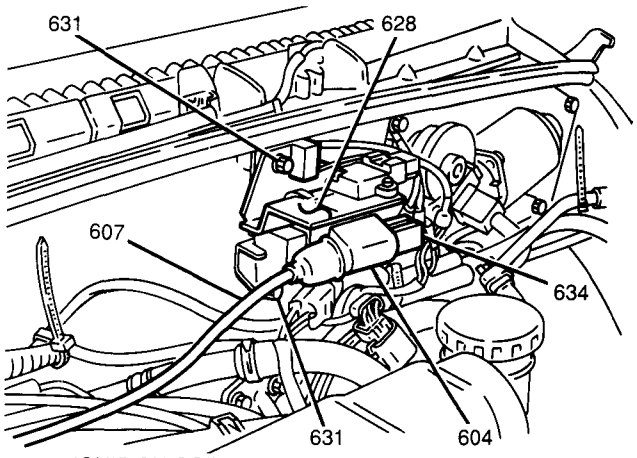

604 IGNITION COIL
607 SECONDARY (COIL) WIRE
628 IGNITION COIL MOUNTING BRACKET
631 IGNITION COIL MOUNTING BRACKET BOLT
634 IGNITION COIL ELECTRICAL CONNECTOR

PC6407-6D4-JT-RS

Figure 10 Ignition Coil

3. Secondary (coil) wire from ignition coil (Figure 10).
4. Two bolts and ignition coil mounting bracket from bulkhead (Figure 10).
5. Two screws and ignition coil from ignition coil mounting bracket (Figure 10).

Install or Connect

1. Ignition coil to ignition coil mounting bracket; secure with two screws.
2. Ignition coil mounting bracket to bulkhead; secure with two bolts.

Tighten

- Ignition coil mounting bracket bolts to 20 N·m (15 lb.ft.).

3. Secondary (coil) wire to ignition coil.
4. Ignition coil electrical connector.
5. Negative (-) battery cable.

Tighten

- Negative (-) battery cable-to-negative (-) battery terminal retainer to 15 N·m (11 lb.ft.).

IGNITER

Figure 11

Remove or Disconnect

1. Negative (-) battery cable.
2. Igniter electrical connector (Figure 11).

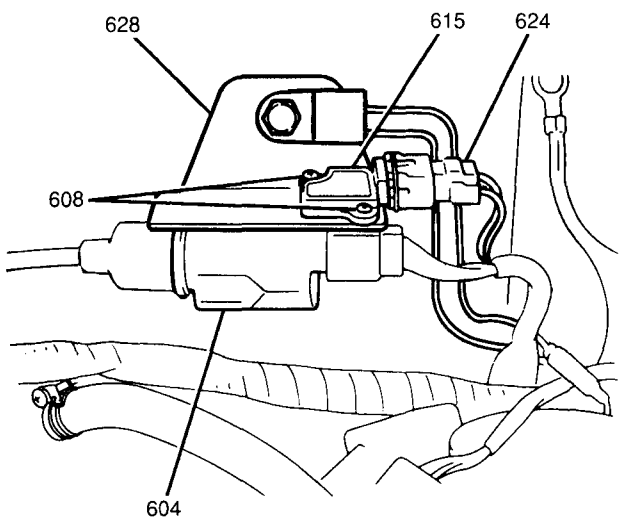

604 IGNITION COIL
608 IGNITER RETAINING SCREW
615 IGNITER
624 IGNITER ELECTRICAL CONNECTOR
628 IGNITION COIL MOUNTING BRACKET

PC6408-6D4-JT-RS

Figure 11 Igniter

3. Two screws and igniter from ignition coil mounting bracket (Figure 11).

Install or Connect

1. Igniter to ignition coil mounting bracket; secure with two screws.
2. Igniter electrical connector.
3. Negative (-) battery cable.

Tighten

- Negative (-) battery cable-to-negative (-) battery terminal retainer to 15 N·m (11 lb.ft.).

IGNITION TIMING

For ignition timing procedures, refer to SECTION 6E.

UNIT REPAIR

The distributor housing assembly components are not serviced separately; service is by the replacement of the housing assembly as a complete unit (Figure 12).

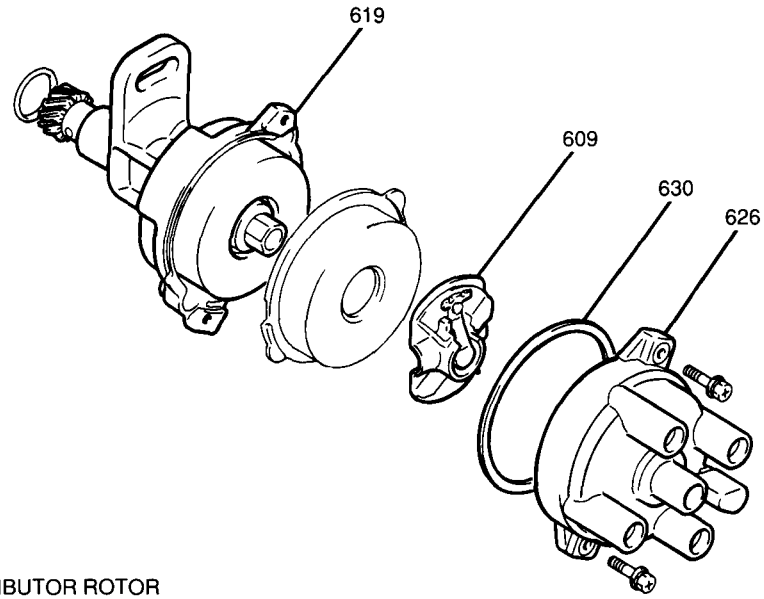

609 DISTRIBUTOR ROTOR
619 DISTRIBUTOR HOUSING
626 DISTRIBUTOR CAP
630 DISTRIBUTOR CAP SEAL

PC6409-6D4-JT-RS

Figure 12 Distributor

DISTRIBUTOR DISASSEMBLY, TEST AND REASSEMBLY

Figures 13 and 14

Remove or Disconnect

Important

- Make sure that the ignition switch is in the "LOCK" position.

1. ECM connector C2 (yellow 24 cavity connector).
2. Two screws and distributor cap from distributor.
3. Distributor rotor and signal rotor cover from distributor housing.

Measure

Tool Required:
J 39200 Digital Multimeter

- Probe ECM connector C1 (green connector still connected) with a J 39200 from cavity "1" to ECM connector C2 cavity "13" (disconnected yellow connector) (Figure 13).
- Turn ignition switch to "ON."

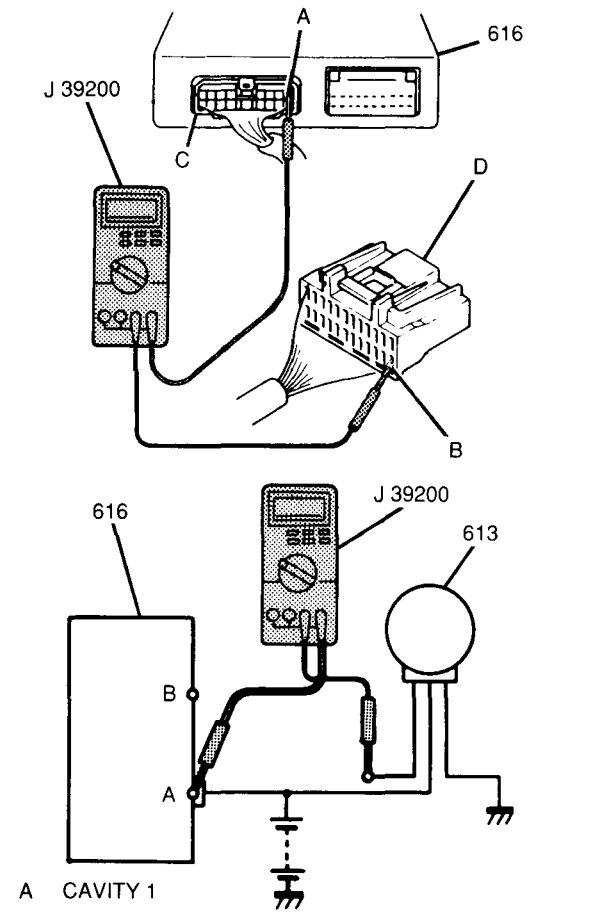

A CAVITY 1
B CAVITY 13
C ECM CONNECTOR C1 (17 CAVITIES-GREEN)
D ECM CONNECTOR C2 (24 CAVITIES-YELLOW)
613 CAMSHAFT POSITION (CMP) SENSOR
616 ENGINE CONTROL MODULE (ECM)

PC6410-6D4-JT-RS

Figure 13 Measuring Camshaft Position (CMP) Sensor Voltage

Important

- Camshaft position (CMP) sensor magnet must be free from any metal particles.

A. CMP sensor voltage with signal rotor inserted between hall element and magnet (magnetic flux cut off) (Figure 14).
   - If voltage is 0 to 1.0 volts, proceed with Step B.
   - If voltage is not 0 to 1.0 volts, refer to SECTION 6E for further diagnostic procedures.

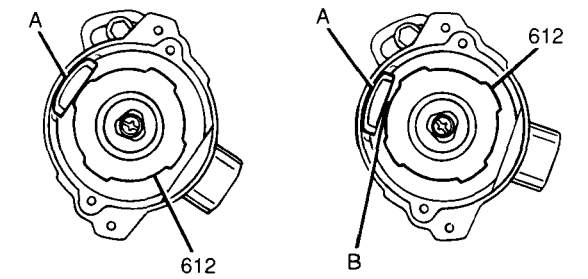

MAGNETIC FLUX CUT OFF | MAGNETIC FLUX APPLIED

A HALL ELEMENT
B MAGNET
612 SIGNAL ROTOR

PC6411-6D4-JT-RS

Figure 14 Magnetic Flux Conditions

B. CMP sensor voltage without signal rotor inserted between hall element and magnet (magnetic flux applied) (Figure 14).
   - If battery voltage is detected, the CMP sensor is operating normally. Turn ignition switch to "LOCK."
   - If battery voltage is not detected, refer to SECTION 6E for further diagnostic procedures.

Install or Connect

1. Distributor signal rotor cover and rotor to distributor housing.
2. Distributor cap to distributor; secure with two screws.
3. ECM connector C2 to ECM.

SPECIFICATIONS

FASTENER TORQUES

Spark Plugs	28 N·m (21 lb.ft.)
Distributor Flange Bolt	20 N·m (15 lb.ft.)
Negative (-) Battery Cable-to-Negative (-) Battery Terminal Retainer	15 N·m (11 lb.ft.)
Ignition Coil Mounting Bracket Bolts	21 N·m (15 lb.ft.)

IGNITION SYSTEM

Spark Plug Type	
NGK	BPR5ES
Nippondenso	W16EXR-U
Spark Plug Gap	0.71 mm (0.028 in.)

SERVICE PARTS INFORMATION

Component Name Used in Section 6D4	Reference Name in Service Parts Catalog	Group Number
Distributor Assembly	Distributor, Ignition	2.361
Distributor Cap	Cap, Distributor	2.367
Distributor Cap Seal	Cap, Distributor	2.367
Distributor Housing	Housing, Distributor	2.362
Distributor Rotor	Rotor, Dist	2.382
Distributor Shaft O-Ring Seal	Seal, Distributor Housing	2.363
Ignition Coil	Coil, Ignition	2.170
Igniter	Igniter, Ign Distr	2.383
Noise Suppressor Filter	Filter, Rfi Noise Suppr	9.654
Noise Suppressor Condenser	Capacitor, Noise Suppressor	9.654
Distributor Shaft O-Ring Seal	Seal, Distributor Housing	2.363
Ignition Coil	Coil, Ignition	2.170
Igniter	Igniter, Ign Distr	2.383
Noise Suppressor Condenser	Capacitor, Noise Suppression	9.654
Noise Suppressor Filter	Filter, Noise Suppression	9.654
Rotor	Rotor, Distributor	2.382
Secondary Wires	Cable, Ignition Coil	2.240
Spark Plugs	Spark Plug	2.270

SPECIAL TOOLS

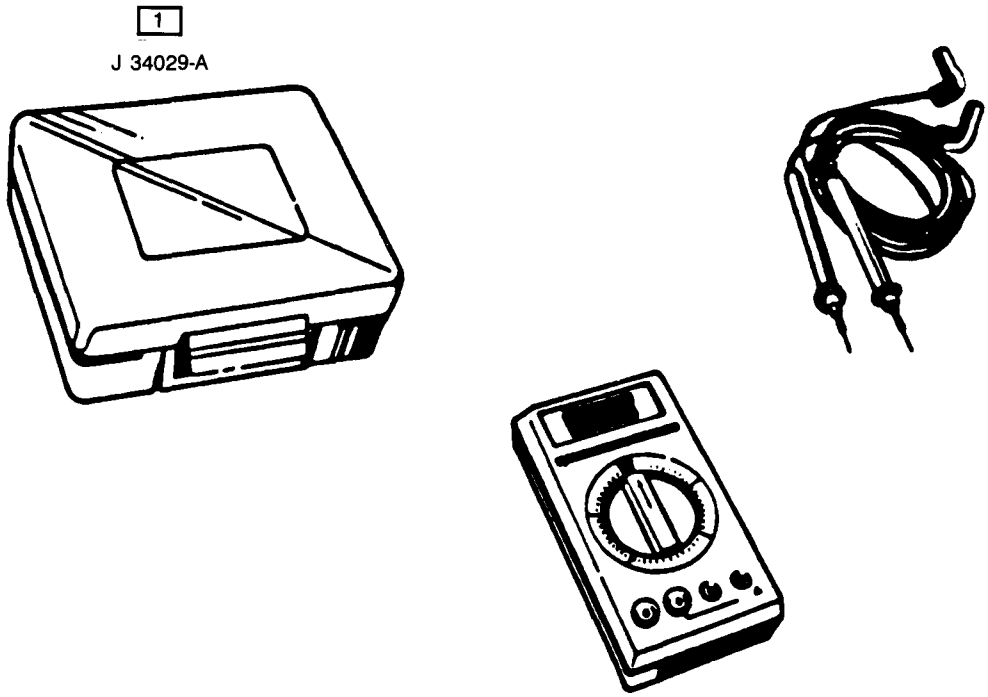

1 DIGITAL MULTIMETER

PC6405-6D4-M-RS

SECTION 6D5

ENGINE WIRING

CONTENTS

Engine Wiring (Bulkhead) 6D5-1
Engine Wiring (Engine) 6D5-2

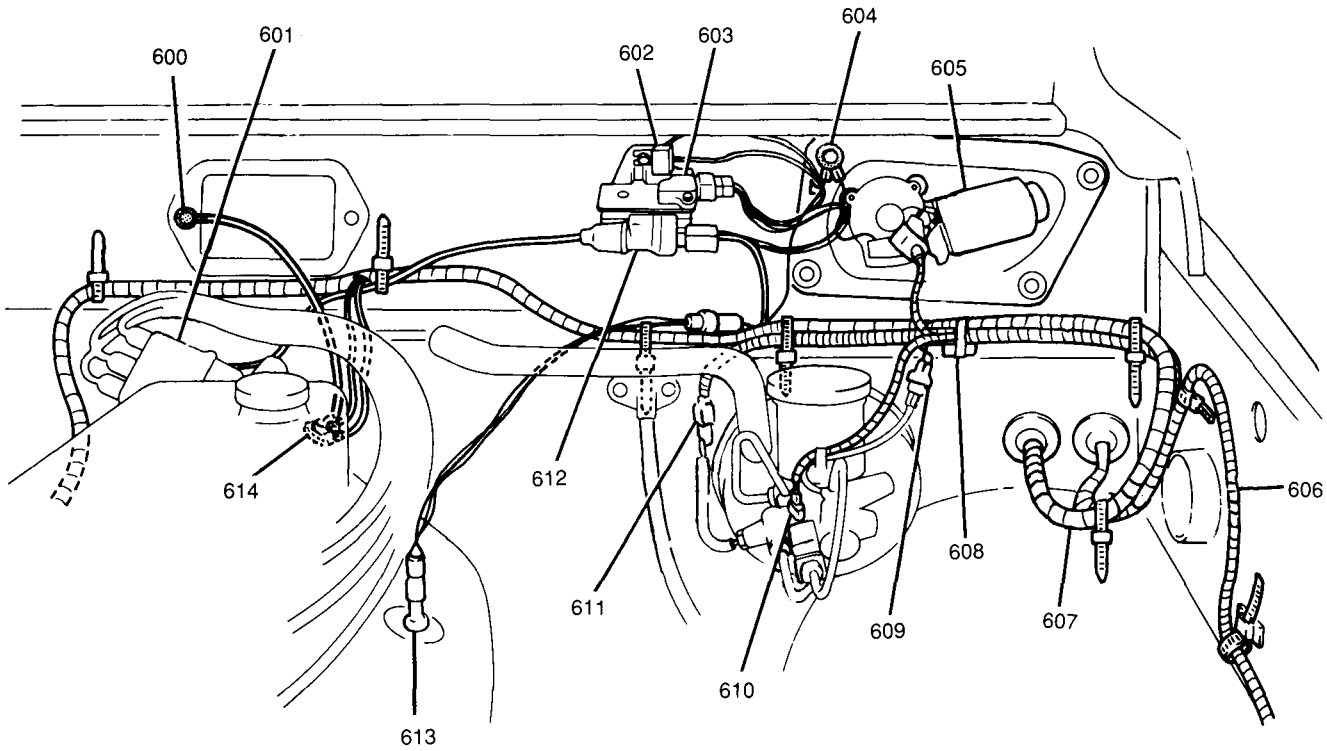

600 GROUND – G107
601 DISTRIBUTOR
602 NOISE SUPPRESSOR CONDENSER
603 IGNITER
604 GROUND – G104
605 FRONT WIPER MOTOR
606 MAIN HARNESS
607 ENGINE HARNESS
608 NOISE SUPPRESSOR FILTER
609 TO BRAKE FLUID LEVEL SWITCH
610 BRAKE FLUID PRESSURE DIFFERENTIAL SWITCH
611 TO PRESSURE LIMIT VALVE
612 IGNITION COIL
613 HEATED OXYGEN SENSOR
614 GROUND – G105

PC6500-6D5-JT-RS

Figure 1 Engine Wiring — 1 of 2

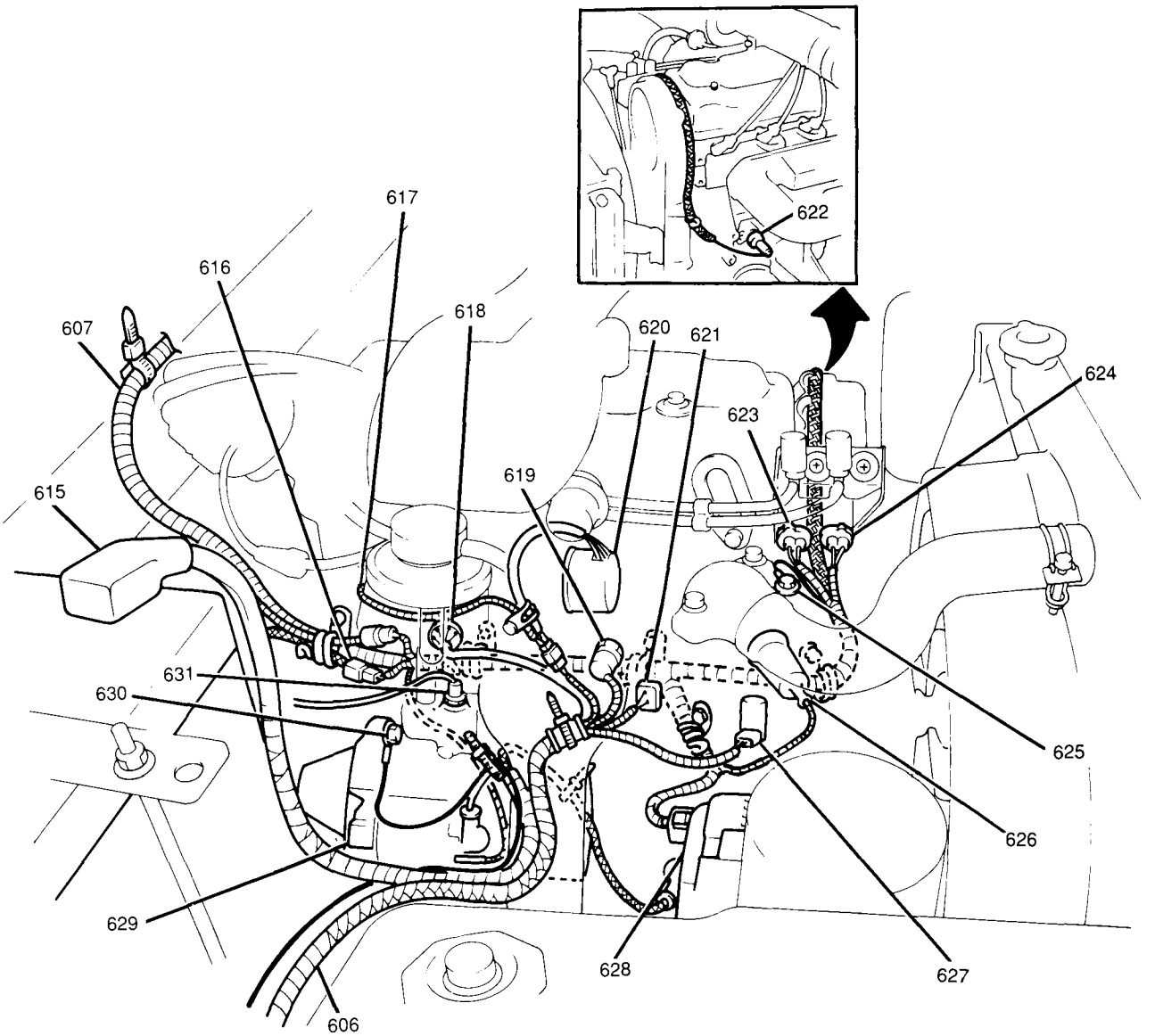

606 MAIN HARNESS
607 ENGINE HARNESS
615 BATTERY POSITIVE (+) TERMINAL
616 C100
617 TO FUEL INJECTOR
618 IDLE AIR CONTROL (IAC) VALVE
619 INTAKE AIR TEMPERATURE (IAT) SENSOR
620 THROTTLE POSITION (TP) SENSOR
621 ENGINE COOLANT TEMPERATURE (ECT) SENSOR
622 OIL PRESSURE SWITCH
623 EXHAUST GAS RECIRCULATION SOLENOID VACUUM (EGR SV) VALVE
624 THROTTLE OPENER SOLENOID VACUUM VALVE
625 GROUND – G106
626 ENGINE COOLANT TEMPERATURE (ECT) SENDING UNIT
627 EVAPORATIVE EMISSION SOLENOID PURGE VALVE
628 GENERATOR
629 STARTER SOLENOID
630 GROUND – G103
631 EXHAUST GAS RECIRCULATION (EGR) TEMPERATURE SENSOR (CALIFORNIA VEHICLES)

PC6501-6D5-JT-RS

Figure 2 Engine Wiring — 2 of 2

SECTION 6E

DRIVEABILITY AND EMISSIONS GENERAL INFORMATION

NOTICE: When fasteners are removed, always reinstall them at the same location from which they were removed. If a fastener needs to be replaced, use the correct part number fastener for that application. If the correct part number fastener is not available, a fastener of equal size and strength (or stronger) may be used. Fasteners that are not reused, and those requiring thread-locking compound, will be called out. The correct torque values must be used when installing fasteners that require them. If the above procedures are not followed, parts or system damage could result.

ALL NEW GENERAL MOTORS VEHICLES ARE CERTIFIED BY THE UNITED STATES ENVIRONMENTAL PROTECTION AGENCY AS CONFORMING TO THE REQUIREMENTS OF THE REGULATIONS FOR THE CONTROL OF AIR POLLUTION FROM NEW MOTOR VEHICLES. THIS CERTIFICATION IS CONTINGENT ON CERTAIN ADJUSTMENTS BEING SET TO FACTORY STANDARDS. IN MOST CASES, THESE ADJUSTMENT POINTS EITHER HAVE BEEN PERMANENTLY SEALED AND/OR MADE INACCESSIBLE TO PREVENT INDISCRIMINATE OR ROUTINE ADJUSTMENT IN THE FIELD. FOR THIS REASON, THE FACTORY PROCEDURE FOR TEMPORARILY REMOVING PLUGS, CAPS, ETC., FOR PURPOSES OF SERVICING THE PRODUCT, MUST BE STRICTLY FOLLOWED AND, WHEREVER PRACTICABLE, RETURNED TO THE ORIGINAL INTENT OF THE DESIGN.

CONTENTS

Driveability and Emissions Control 6E-1
Emissions Control Information Label 6E-1
Maintenance Schedule 6E-2
Blocking Drive Wheels 6E-2
What This Section Contains 6E-2
Visual/Physical Underhood Inspection ... 6E-4
Basic Knowledge and Tools Required 6E-4
Electrostatic Discharge Damage 6E-4
Diagnostic Information 6E-4
Malfunction Indicator Lamp (MIL) 6E-4
Intermittent Malfunction Indicator Lamp (MIL) 6E-5
Reading Diagnostic Trouble Codes (DTCs) 6E-5
Clearing Diagnostic Trouble Codes (DTCs) 6E-5
Diagnostic Mode 6E-6
Field Service Mode 6E-6
Diagnostic Circuit Check 6E-6
Data Link Connector (DLC) "Scan" Tools 6E-6
"Scan" Tool Use with Intermittents 6E-7
Wiring Harness Service 6E-7
Tools Needed to Service the System 6E-7
Special Tools 6E-8
General Specifications 6E-10

DRIVEABILITY AND EMISSIONS CONTROL

The computer command control system, which is controlled by the engine control module (ECM), is designed to maintain exhaust emission levels at federal standards while providing good driveability and fuel efficiency. The functions of the system are based on data gathered by sensors and switches located throughout the vehicle. The ECM maintains control over fuel delivery, ignition, idle air flow, the fuel pump and other system components, while monitoring the system for faulty operation with its diagnostic capabilities (Figure 1).

It is important to review the component sections and wiring diagrams in SECTION 6E2 to determine which systems are controlled by the ECM.

EMISSIONS CONTROL INFORMATION LABEL

The underhood vehicle emissions control information label (Figure 2) contains important emission specifications and setting procedures. In the upper right corner is exhaust emission information which identifies the year, the manufacturing division of the engine, the displacement of the engine in liters, the class of vehicle, and type of fuel metering. There is also an illustrated emission component and vacuum hose schematic.

This label is located in the engine compartment of every General Motors vehicle. If the label has been removed, it can be ordered from GM Service Parts Organization (GMSPO).

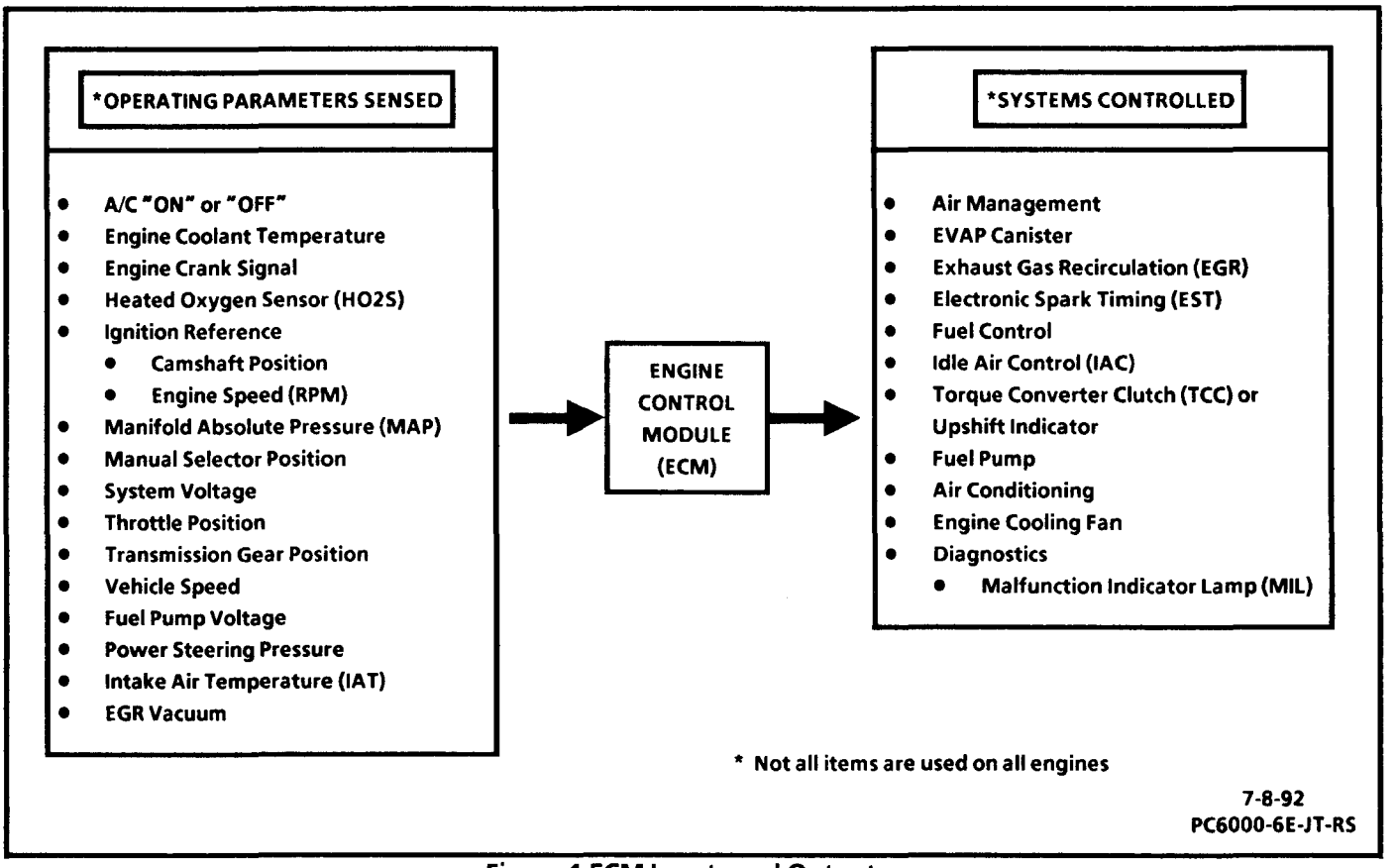

Figure 1 ECM Inputs and Outputs

MAINTENANCE SCHEDULE

Refer to the SECTION 0B for the maintenance service that should be performed to retain emission control performance.

BLOCKING DRIVE WHEELS

The vehicle drive wheels always should be blocked and parking brake firmly set while checking the electronic engine control system, unless specified otherwise.

WHAT THIS SECTION CONTAINS

SECTION 6E has been developed to describe the function and operation of the electronic engine control system that controls the driveability and emissions of the vehicle. Emphasis is placed on the diagnosis and repair of problems related to the system.

This section also provides general diagnostic procedures, TECH 1 diagnostic computer use, wiring and terminal repair procedures and descriptions of special tools. It then leads into SECTION 6E2, which deals with engine control systems using throttle body injection for fuel delivery.

SECTION 6E2 is divided into three major subsections dealing with diagnosis and repair. They can be summarized as follows:

SECTION A: ENGINE COMPONENTS/WIRING DIAGRAMS/DIAGNOSTIC CHARTS

- Component Locations
- Wiring Diagrams
- ECM Terminal End View and Terminal Definitions
- Diagnostic Circuit Check This must be the first step of any diagnostic procedure.
- Typical Tech 1 Data and Definitions
- Diagnostic Trouble Code Charts These charts are designed with facing pages containing circuit diagrams, circuit operation information, and helpful diagnostic information.

SECTION B: SYMPTOMS

- This subsection assists in the diagnosis of intermittent problems or problems which do not result in the storing of diagnostic trouble codes (DTCs). It is arranged by symptoms of poor driveability and emissions and lists possible causes of the problems.

SECTION C: COMPONENT SYSTEMS

- Component and Circuit Descriptions
- On-Vehicle Service
- Functional Checks/Diagnostic Charts

IMPORTANT VEHICLE INFORMATION
SUZUKI MOTOR CORPORATION

ENGINE DISPLACEMENT: 1.6 LITER
ENGINE FAMILY IDENTIFICATION: PSK1.6T5FFC7
ENGINE TUNE UP SPECIFICATIONS AND ADJUSTMENTS:

- AT NORMAL OPERATING TEMPERATURE
- LIGHTS, HEATER BLOWER AND AIR CONDITIONER OFF
- TRANSMISSION IN NEUTRAL

IDLE SPEED	800 RPM(N)		
IGNITION TIMING	8° BTDC WITH CHECK CONNECTOR SHORT CIRCUITED AT IDLING		
IDLE MIXTURE SETTING	IDLE MIXTURE SCREW IS PRESET AND SEALED AT FACTORY. ADJUSTMENT DURING TUNE UP IS NOT RECOMMENDED.		
SPARK PLUG GAP			0.028 IN.
VALVE CLEARANCE	COLD	INTAKE	0.006 IN.
		EXHAUST	0.007 IN.
	HOT	INTAKE	0.010 IN.
		EXHAUST	0.011 IN.

THIS VEHICLE CONFORMS TO U.S. EPA REGULATIONS APPLICABLE TO 1993 MODEL YEAR NEW LIGHT-DUTY TRUCKS. HOWEVER, IF THIS VEHICLE IS BUILT FOR USE IN CANADA, IT DOES NOT COMPLY WITH U.S. EPA FUEL LABELING REGULATIONS

CATALYST TBI / TWC / HO2S / EGR

VACUUM HOSE ROUTING

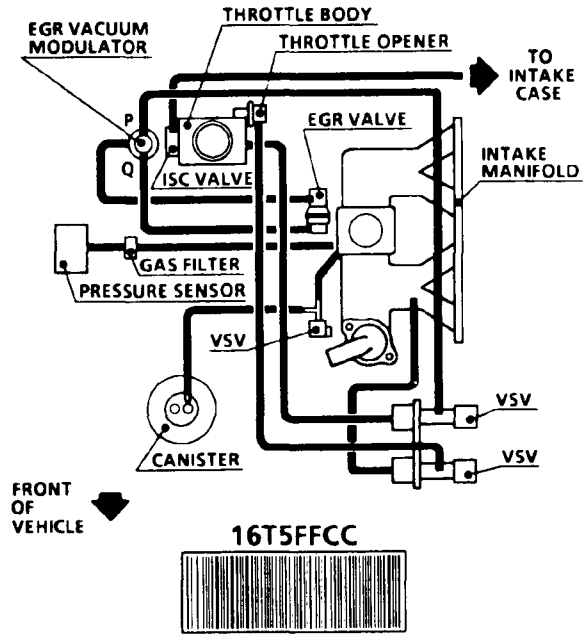

7-1-92
PC6001-6E-JT-RS

SAMPLE

Figure 2 Vehicle Emission Control Information Label

VISUAL/PHYSICAL UNDERHOOD INSPECTION

A careful visual and physical underhood inspection must be performed as part of any diagnostic procedure or in finding the cause of an emissions test failure. This can often lead to fixing a problem without further steps. Inspect all vacuum hoses for correct routing, pinches, cuts or disconnects. Be sure to inspect hoses that are difficult to see beneath the air cleaner, compressor, generator, etc. Inspect all the wires in the engine compartment for proper connections, burned or chafed spots, pinched wires or contact with sharp edges or hot exhaust manifolds. This visual/physical inspection is very important. It must be done carefully and thoroughly.

BASIC KNOWLEDGE AND TOOLS REQUIRED

To use this manual most effectively, a general understanding of basic electrical circuits and circuit testing tools is required. The technician should be familiar with wiring diagrams, the meaning of voltage, ohms, amps, the basic theories of electricity and understand what happens in an open or shorted wire.

To perform system diagnosis, the use of a TECH 1 diagnostic computer or equivalent "Scan" tool is required. A tachometer, test light, high-impedance (at least 10 megohms) digital multimeter, vacuum gage and jumper wires are also required. Please become acquainted with the tools and their use before attempting to diagnose a driveability problem. Special tools which are required for system service and the ones described above are illustrated at the end of this section.

Electrostatic Discharge Damage

Electronic components used in control systems are often designed to carry very low voltage, and are very susceptible to damage caused by electrostatic discharge. It is possible for less than 100 volts of static electricity to cause damage to some electronic components. By comparison, it takes as much as 4,000 volts for a person to even feel the zap of a static discharge.

There are several ways for a person to become statically charged. The most common methods of charging are by friction and by induction. An example of charging by friction is a person sliding across a car seat, in which a charge of as much as 25,000 volts can build up. Charging by induction occurs when a person with well insulated shoes stands near a highly charged object and momentarily touches ground. Charges of the same polarity are drained off, leaving the person highly charged with the opposite polarity. Static charges of either type can cause damage; therefore, it is important to use care when handling and testing electronic components.

NOTICE: To prevent possible electrostatic discharge damage:

- Always touch a known good ground before handling an engine control module (ECM).
- Do not touch the ECM connector pins or soldered components on the ECM circuit board.

DIAGNOSTIC INFORMATION

The diagnostic charts and functional checks in this manual are designed to locate a faulty circuit or component through logic based on the process of elimination. The charts are prepared with the requirement that the vehicle functioned correctly at the time of assembly and that there are no multiple failures.

The engine control module (ECM) performs a continual self-diagnosis on certain control functions. This diagnostic capability is complemented by the diagnostic procedures contained in this manual. The ECM's language for communicating the source of a malfunction is a system of diagnostic trouble codes (DTCs). The DTCs are two digit numbers that range from 12 to 53. When a malfunction is detected by the ECM, a DTC is set and the malfunction indicator lamp (MIL) is illuminated.

Malfunction Indicator Lamp (MIL)

This indicator is in the instrument panel cluster assembly and has the following functions:

- It informs the driver that a problem has occurred and that the vehicle should be taken for service as soon as reasonably possible.
- It displays diagnostic trouble codes (DTCs) stored by the engine control module (ECM) which help the technician diagnose system problems.

As a bulb and system check, the malfunction indicator lamp (MIL) should be lit with the ignition switch in the "ON" position (engine not running). When the engine is started, the MIL will go out. If the MIL remains lit, the self-diagnostic system has detected a problem. If the problem goes away, the MIL will go out immediately but a corresponding DTC will be stored in the memory of the ECM. DTC 41 (Ignition Signal Circuit), however, is an exception to this statement and is not stored in ECM memory. Any memory of DTC 41 is erased as soon as the ignition switch is turned to the "LOCK" position. In order to detect an active DTC 41, the engine must be cranked for 3 seconds and the TECH 1 diagnostic computer connected with the ignition switch left in "ON." If the ignition switch is turned to "LOCK" at any time during this procedure, a present DTC 41 will be lost.

For further DTC retrieval information, refer to "Reading Diagnostic Trouble Codes (DTCs)" later in this section.

When the MIL remains lit while the engine is running, or when a malfunction is suspected due to a driveability or emissions problem, the **"Diagnostic Circuit Check" must be performed**. The procedure for this check is given in "Engine Components/Wiring Diagrams/Diagnostic Charts" in SECTION 6E2-A. This check will expose malfunctions which may not be detected if other diagnostics are performed prematurely.

Intermittent Malfunction Indicator Lamp (MIL)

In the case of an "intermittent" problem, the malfunction indicator lamp (MIL) will remain lit as long as the trouble exists and will go out when the system returns to normal, **except in the case of Exhaust Gas Recirculation (EGR) intermittents.** EGR intermittents will cause the MIL to remain lit until the ignition switch is turned to "LOCK."

Even though the MIL goes out, the corresponding diagnostic trouble code (DTC) will be stored in the memory of the engine control module (ECM) unless system voltage is removed for 30 seconds or longer. DTC 41 (Ignition Signal Circuit), however, is an exception to this statement and is not stored in the memory of the ECM. For retrieval of an active DTC 41, refer to Malfunction Indicator Lamp (MIL) earlier in this section.

When unexpected DTCs appear during the DTC reading process, the assumption can be made that these DTCs were set by an intermittent malfunction and could be helpful in diagnosing the system.

An intermittent DTC may or may not reset. If it is an intermittent failure, a Diagnostic Trouble Code Chart is not used. Consult the "Diagnostic Aids" on the page facing the diagnostic chart corresponding to the intermittent DTC. The topic of "Intermittents" is also covered in "Symptoms" in SECTION 6E2-B. A physical inspection of the applicable subsystem most often will resolve the problem.

Reading Diagnostic Trouble Codes (DTCs)

The provisions for communicating with the engine control module (ECM) are the data link connector (DLC) and the diagnostic request terminal in the duty check DLC (Figures 3 and 4). The DLC is located under the instrument panel to the left of the steering column and is initially used at the assembly plant for determining powerplant system integrity prior to vehicle shipment. The duty check DLC is located in the right rear engine compartment near the battery. (DTCs) stored in ECM memory can be read either through the TECH 1 diagnostic computer (a hand-held

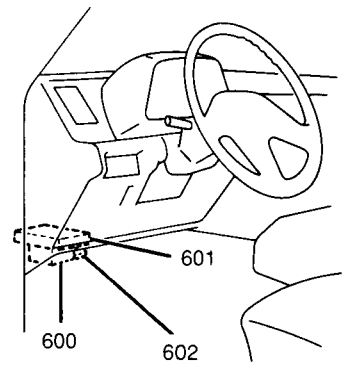

600 FUSE BOX
601 ENGINE CONTROL MODULE (ECM)
602 DATA LINK CONNECTOR (DLC) PC6002-6E-JT-RS

Figure 3 Data Link Connector (DLC)

diagnostic scanner) plugged into the DLC or by counting the flashes of the malfunction indicator lamp (MIL) after grounding the diagnostic request terminal in the duty check DLC. When this terminal is grounded, the ECM enters its diagnostic mode and outputs DTCs to the MIL.

To ground the diagnostic request terminal in the duty check DLC, connect a jumper between duty check DLC cavities "2" and "3". At this point, the MIL should flash DTC 12 continuously. This would be the following flash sequence: "flash, pause, flash-flash, long pause, flash, pause, flash-flash, long pause, flash, pause, flash-flash," etc. DTC 12 indicates that the ECM's diagnostic system is operating. If DTC 12 is not indicated, a problem is present within the diagnostic system itself, which should be addressed by consulting "Engine Components/Wiring Diagrams/Diagnostic Charts" in SECTION 6E2-A.

If any DTCs exist indicating a problem (DTCs other than DTC 12), those DTCs will flash instead of a DTC 12. If more than one DTC is stored in the ECM's memory, the DTCs will be repeatedly output from the lowest to the highest, with each DTC being displayed three times.

Clearing Diagnostic Trouble Codes (DTCs)

To clear the diagnostic trouble codes (DTCs) from the memory of the engine control module (ECM), either to determine if the malfunction will occur again or because repair has been completed, the ECM power feed must be disconnected for at least 30 seconds. To remove power from the ECM, remove the TAIL/DOME fuse located in the fuse block. If working under the hood, the 40A Fusible Link C (green) in the fusible link box on the right rear fender apron can be removed to disconnect power to the ECM. Removal of the 40A Fusible Link C will erase memory in the clock and/or

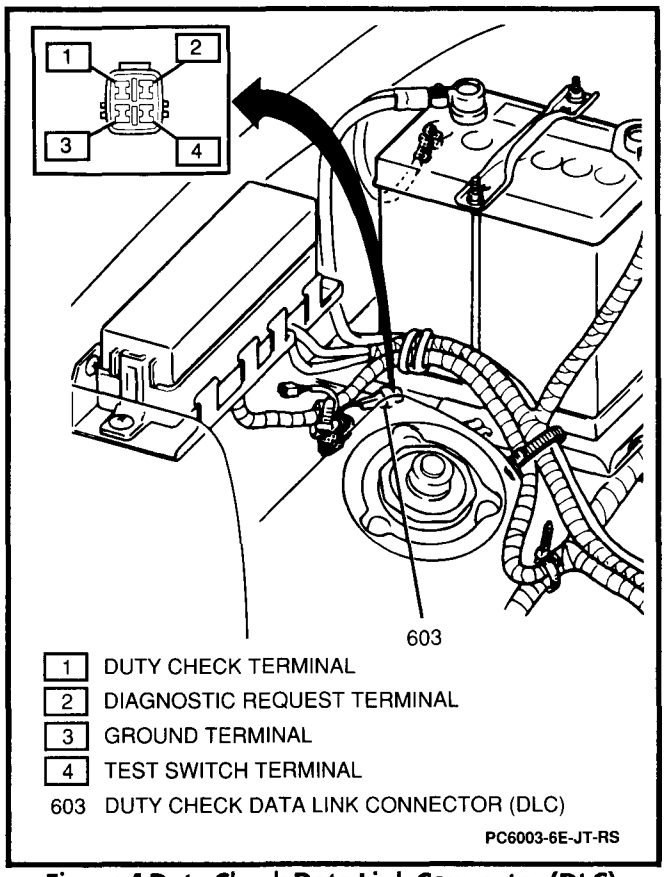

Figure 4 Duty Check Data Link Connector (DLC)

radio, so use of the TAIL/DOME Fuse for this purpose is preferred.

NOTICE: To prevent ECM damage, the ignition switch must be in the "LOCK" position when disconnecting or reconnecting ECM power.

Diagnostic Mode

When the diagnostic request terminal, in the duty check data link connector (DLC), is grounded with the ignition switch in the "ON" position (engine not running), the system enters what is called the diagnostic mode. In this mode, the engine control module (ECM) will perform the following functions:

1. Display diagnostic trouble code (DTC) 12 by flashing the malfunction indicator lamp (MIL) (indicating the system is operating correctly).
2. Display any stored DTCs by flashing the MIL. If DTCs other than DTC 12 are stored, DTC 12 will not be flashed.
3. Output idle speed control duty through the duty check terminal of the duty check DLC.

Field Service Mode

If the test switch terminal is grounded, the engine control module (ECM) sets ignition timing to its initial (non-corrected) setting. The test switch terminal is located in the duty check data link connector (DLC).

If both the diagnostic request terminal and the test switch terminal are grounded simultaneously, the ECM outputs the air/fuel duty through the duty check terminal of the duty check DLC.

DIAGNOSTIC CIRCUIT CHECK

The correct method for diagnosing problems is to follow these three basic steps:

1. Are the on-vehicle diagnostics working? This is determined by performing the "Diagnostic Circuit Check." Since this is the starting point for diagnostic procedures or for finding the cause of an emissions test failure, always begin here. The "Diagnostic Circuit Check" is located at the beginning of "Engine Components/Wiring Diagrams/Diagnosis Charts" in SECTION 6E2-A. If the on-vehicle diagnostics are not operating properly, the "Diagnostic Circuit Check" will lead to a diagnostic chart in "Engine Components/Wiring Diagrams/Diagnosis Charts" in SECTION 6E2-A to correct the problem. If the on-vehicle diagnostics are working properly, proceed to the next step.
2. Is a diagnostic trouble code (DTC) stored? If a DTC is stored, go directly to the numbered DTC chart in "Engine Components/Wiring Diagrams/ Diagnostic Charts" in SECTION 6E2-A. This will determine if the fault is still present. If no DTC is stored, proceed to the next step.
3. "Scan" serial data transmitted by the engine control module (ECM). This involves reading the information available on the serial data stream with TECH 1 or one of the tools available for that purpose. Information on these tools and the meanings of the various displays can be found in the succeeding paragraphs.

DATA LINK CONNECTOR (DLC) "SCAN" TOOLS

The engine control module (ECM) can communicate a variety of information through the data link connector (DLC). This data is transmitted at a high frequency which requires a TECH 1 diagnostic computer or "Scan" tool for interpretation. There are several "Scan" tools available for reading this information.

With an understanding of the data which the tool displays, and a knowledge of the circuits involved, the tool can be very useful in obtaining information which would be more difficult or impossible to obtain with other equipment.

TECH 1 and "Scan" tools do not make the use of diagnostic charts unnecessary, nor can they indicate exactly where a problem is in a particular circuit.

Diagnostic charts incorporate procedures using a TECH 1 when it is applicable.

A "SCAN" TOOL THAT DISPLAYS FAULTY DATA SHOULD NOT BE USED AND THE PROBLEM SHOULD BE REPORTED TO THE MANUFACTURER. THE USE OF A FAULTY "SCAN" TOOL CAN RESULT IN MISDIAGNOSIS AND UNNECESSARY PARTS REPLACEMENT.

"SCAN" TOOL USE WITH INTERMITTENTS

In some "Scan" tool applications, the data update rate makes the tool less effective than a digital multimeter – such as when trying to detect an intermittent problem which lasts a very short time. However, the TECH 1 does allow manipulation of wiring harnesses under the hood (engine not running) while observing readouts.

The TECH 1 or "Scan" tool can also be plugged in and observed while driving the vehicle under the condition when the malfunction indicator lamp (MIL) comes on momentarily or when engine driveability is momentarily poor. If the problem seems to be related to certain parameters that can be checked on the TECH 1, they should be checked while driving the vehicle. If there does not seem to be any correlation between the problem and any specific circuit, the TECH 1 can be checked on each position, watching for a period of time to see if there is any change in the readings that indicates intermittent operation.

The TECH 1 is also an easy way to compare the operating parameters of a poorly operating engine with those of a known good one. For example, a sensor may shift in value but not set a diagnostic trouble code (DTC). Comparing the sensor's readings with those of a known good one may uncover the problem.

The TECH 1 has the ability to save time in diagnosis and prevent the replacement of good parts. The key to using the TECH 1 successfully in diagnosis lies in the technician's ability to understand the system he is trying to diagnose as well as an understanding of the TECH 1 operation and limitations. The technician should read the TECH 1 manufacturer's operating manual to become familiar with its operation.

WIRING HARNESS SERVICE

Wiring harnesses should be replaced with proper part number harnesses. Use J 38125-A Terminal Repair Kit when making repairs to wires or connectors When signal wires are spliced into a harness, use wire with high temperature insulation only. Refer to SECTION 8A-5 for wiring harness and connector repair instructions.

TOOLS NEEDED TO SERVICE THE SYSTEM

For thorough diagnosis, the system requires a TECH 1 diagnostic computer or equivalent "Scan" tool, a tachometer, a test light, a high-impedance digital multimeter (J 39200 or equivalent), a vacuum gage and some fused jumper wires. A test light or digital multimeter must be used when specified in the diagnosis procedures. For more information on the tools necessary for diagnostics, refer to "Special Tools" later in this section and to the individual tool manufacturer's instructions.

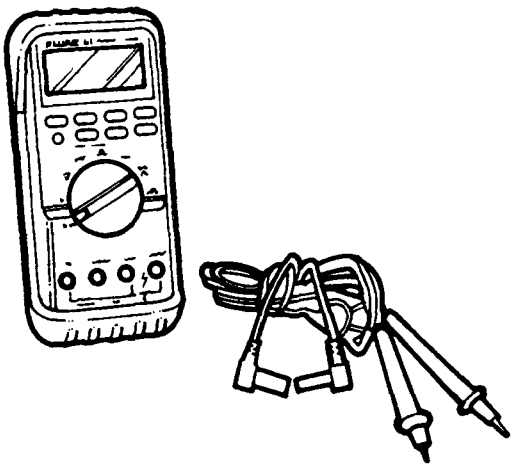 J 39200	**DIGITAL MULTIMETER** Voltmeter - Voltage position measures magnitude of voltage when connected in parallel to an existing circuit. A digital voltmeter with a 10 megohm input impedance is used because this type of meter will not load down the circuit and result in faulty readings. Some circuits require accurate low voltage readings because they have a very high resistance. Refer to meter instructions for more information. Ammeter - When used as an ammeter, this meter accurately measures extremely low current flow. Refer to meter instructions for more information. • Selector must be set properly for both function and range. DC is used for most automotive measurements. Ohmmeter - Measures resistance of circuit directly in ohms. • Selector must be set to proper range. Refer to meter instructions for more information.
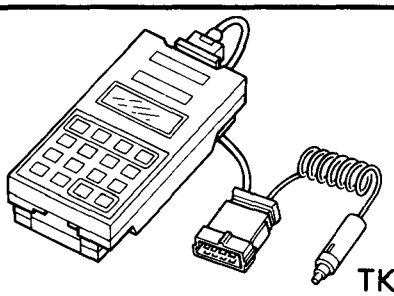 TK00000	**TECH 1 DIAGNOSTIC COMPUTER** A hand-held "SCAN" tool used to analyze and diagnose fuel and emissions system. Also can be used to analyze other computer systems.
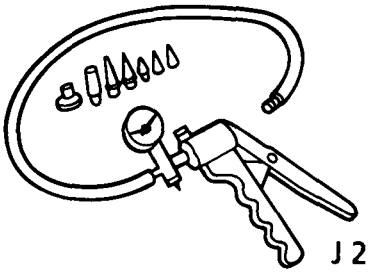 J 23738-A	**PLASTIC MITY-VAC® HAND VACUUM PUMP** Use the gage to monitor manifold engine vacuum and use the hand pump to check vacuum sensors, solenoids and valves.
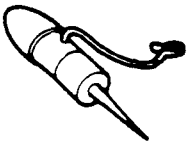 J 34142-B	**UNPOWERED TEST LIGHT** Used for checking wiring for complete circuit, short to ground or voltage.
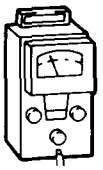	**TACHOMETER** Must have inductive trigger signal pickup. 7-6-92 PC6004-6E-JT-RS

Special Tools 1

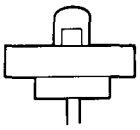 J 34730-300	**INJECTOR TEST LIGHT** Used for checking the electrical circuit to a TBI fuel injector.
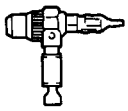 J 26792	**H. E. I. SPARK TESTER** Used for checking the secondary ignition coil voltage.
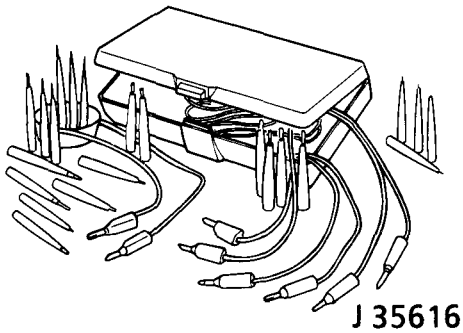 J 35616	**CONNECTOR TEST ADAPTER KIT** Used for making electrical test connections in current Weather Pack, Metri-Pack and Micro-Pack style terminals.
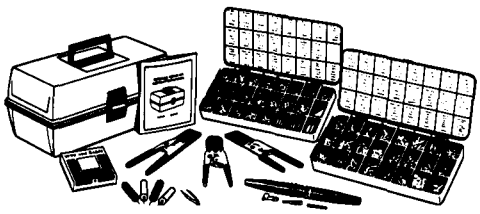 J 38125-A	**TERMINAL REPAIR KIT** Used for making wiring harness repairs.
J 34730-1	**FUEL PRESSURE GAGE** Used to check and monitor fuel pressure. Part of Diagnostic Kit/J 34730-B
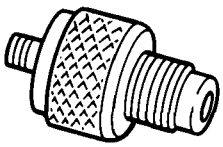 J 37746	**FUEL PRESSURE GAGE ADAPTER** Used to adapt J 34730-1 fuel pressure gage to Tracker TBI fuel system. 7-1-92 PC6005-6E-JT-RS

Special Tools 2

GENERAL SPECIFICATIONS

Listed on the chart below are locations of specifications used in this section.

SPECIFICATION	LOCATION OF INFORMATION
Engine Timing	Vehicle emission control information label.
Idle Speed, ECM Controlled	Not adjustable. ECM controls idle.
Spark Plug Type	SECTION 0B.
Spark Plug Gap	SECTION 0B.
Engine Code	Eighth digit of VIN number. Also SECTION 0A.
Engine Family	Vehicle Emission Control Information label.
Filter Part Numbers	SECTION 0B.
Part Numbers of Major Components	GMSPO Parts Book.
Replacement of Vehicle Emission Control Information Label	GMSPO Parts Book.

SECTION 6E2

DRIVEABILITY AND EMISSIONS FUEL INJECTION (TBI)

THIS SECTION APPLIES TO:

1.6L (VIN U) "E/J" TRUCK

NOTICE: When fasteners are removed, always reinstall them at the same location from which they were removed. If a fastener needs to be replaced, use the correct part number fastener for that application. If the correct part number fastener is not available, a fastener of equal size and strength (or stronger) may be used. Fasteners that are not reused, and those requiring thread-locking compound, will be called out. The correct torque values must be used when installing fasteners that require them. If the above procedures are not followed, parts or system damage could result.

CONTENTS

1.6L (VIN U)

Introduction		1.6L (VIN U)	6E2-2
General Description		1.6L (VIN U)	6E2-2
Diagnosis Procedure		1.6L (VIN U)	6E2-2
Section A	Engine Components/Wiring Diagrams/Diagnostic Charts	1.6L (VIN U)	6E2-A-1
Section B	Symptoms	1.6L (VIN U)	6E2-B-1
Section C	Component Systems	1.6L (VIN U)	6E2-C-1
C1	Engine Control Module (ECM) and Sensors	1.6L (VIN U)	6E2-C1-1
C2	Fuel Metering System	1.6L (VIN U)	6E2-C2-1
C3	Evaporative Emission Control System (EECS)	1.6L (VIN U)	6E2-C3-1
C4	Ignition System	1.6L (VIN U)	6E2-C4-1
C7	Exhaust Gas Recirculation (EGR) System	1.6L (VIN U)	6E2-C7-1
C8	Torque Converter Clutch (TCC)	1.6L (VIN U)	6E2-C8-1
C13	Positive Crankcase Ventilation (PCV) System	1.6L (VIN U)	6E2-C13-1
Index		End of Section	

ALL NEW GENERAL MOTORS VEHICLES ARE CERTIFIED BY THE UNITED STATES ENVIRONMENTAL PROTECTION AGENCY AS CONFORMING TO THE REQUIREMENTS OF THE REGULATIONS FOR THE CONTROL OF AIR POLLUTION FROM NEW MOTOR VEHICLES. THIS CERTIFICATION IS CONTINGENT ON CERTAIN ADJUSTMENTS BEING SET TO FACTORY STANDARDS. IN MOST CASES, THESE ADJUSTMENT POINTS EITHER HAVE BEEN PERMANENTLY SEALED AND/OR MADE INACCESSIBLE TO PREVENT INDISCRIMINATE OR ROUTINE ADJUSTMENT IN THE FIELD. FOR THIS REASON, THE FACTORY PROCEDURE FOR TEMPORARILY REMOVING PLUGS, CAPS, ETC., FOR PURPOSES OF SERVICING THE PRODUCT, MUST BE STRICTLY FOLLOWED AND, WHEREVER PRACTICABLE, RETURNED TO THE ORIGINAL INTENT OF THE DESIGN.

INTRODUCTION

GENERAL DESCRIPTION

This Section applies to engines which have a fuel injector mounted above a throttle body assembly. The entire assembly is mounted to the intake manifold and is referred to as "Throttle Body Fuel Injection (TBI)" unit.

These engines have controls to reduce exhaust emissions, while maintaining good driveability and fuel economy.

An engine control module (ECM) is the heart of this control system and has sensors used to provide information about engine operation and the various systems it controls. Details of basic operation, diagnosis, functional checks, and on-vehicle service are covered in SECTION 6E2-C.

The ECM has the ability to do some diagnosis of itself, and of other parts of the system. When it finds a problem, it lights a malfunction indicator lamp (MIL) in the instrument panel cluster and a diagnostic trouble code (DTC) will be stored in the ECM memory. This does not mean that the engine should be stopped right away, but that the cause of the MIL coming "ON" should be checked as soon as reasonably possible.

DIAGNOSIS PROCEDURE

The following sections(s) are written for specific engine applications and are clearly identified. Be sure to use only the section which applies to the engine family being diagnosed.

Before using this Section of the manual, you should be familiar with the information and the proper diagnosing procedures as described in SECTION 6E. If the proper diagnosis procedures are not followed, as described in SECTION 6E, it may result in unnecessary replacement of good parts.

Diagnostic Charts incorporate diagnosis procedures using a data link connector (DLC) "Scan" tool, where possible. The "Scan" tool has the ability to save time in diagnosis and prevent the replacement of good parts. The key to using the "Scan" tool successfully for diagnosis lies in the technician's ability to understand the system he is trying to diagnose, as well as an understanding of the "Scan" tool's limitations. See SECTION 6E for more information.

SECTION A
ENGINE COMPONENTS/WIRING DIAGRAMS/ DIAGNOSTIC CHARTS

BASIC PROCEDURE

If the basic information on using the diagnostic procedures contained in this section has not been reviewed, refer to the "Introduction" of this section.

DIAGNOSTIC CIRCUIT CHECK

The "Diagnostic Circuit Check" verifies that the engine control system is functioning correctly. Special considerations to observe while performing the "Diagnostic Circuit Check" are:

Blocking Drive Wheels

The vehicle drive wheels should always be blocked while checking the system.

Cold Heated Oxygen Sensor (HO2S)

The system heated oxygen sensor (HO2S) may cool off after only a short period of operation at idle. This will cause the system to enter "Open Loop" operation. Run the engine at part throttle until "Closed Loop" operation is restored.

CONTENTS

Component Locations 6E2-A-2
ECM Wiring Diagrams 6E2-A-3
ECM Connector Terminal End Views 6E2-A-6
Diagnostic Circuit Check 6E2-A-8
Typical Tech 1 Data Values 6E2-A-10
Tech 1 Data Definitions 6E2-A-11
Chart A-1: No Malfunction Indicator Lamp (MIL) 6E2-A-14
Chart A-2: Will Not Flash DTC 12 or any DTCs, Malfunction Indicator Lamp (MIL) "ON" Steady 6E2-A-16
Chart A-3: Engine Cranks But Will Not Run 6E2-A-18
Chart A-5: Fuel Injector Circuit Check (Engine No-Start) 6E2-A-20
Chart A-7A: Fuel System Diagnosis (Fuel Pump Relay Check) 6E2-A-22
Chart A-7B: Fuel System Diagnosis (Fuel Pressure Check) (Page 1 of 2) 6E2-A-24
Chart A-7C: Fuel System Diagnosis (Fuel Pressure Gage) 6E2-A-28
DTC 13 - Heated Oxygen Sensor (HO2S) Circuit (Open Circuit) 6E2-A-30
DTC 14 - Engine Coolant Temperature (ECT) Sensor Circuit (High Voltage Input) 6E2-A-32
DTC 15 - Engine Coolant Temperature (ECT) Sensor Circuit (Low Voltage Input) 6E2-A-34
DTC 21 - Throttle Position (TP) Sensor Circuit (High Voltage Input) 6E2-A-36
DTC 22 - Throttle Position (TP) Sensor Circuit (Low Voltage Input) 6E2-A-38
DTC 23 - Intake Air Temperature (IAT) Sensor Circuit (High Voltage Input) 6E2-A-40
DTC 24 - Vehicle Speed Sensor (VSS) Circuit 6E2-A-42
DTC 25 - Intake Air Temperature (IAT) Sensor Circuit (Low Voltage Input) 6E2-A-44
DTC 31 - Manifold Absolute Pressure (MAP) Sensor Circuit (High Voltage Input) 6E2-A-46
DTC 32 - Manifold Absolute Pressure (MAP) Sensor Circuit (Low Voltage Input) 6E2-A-48
DTC 41 - Ignition Signal Circuit (No Signal) 6E2-A-50
DTC 42 - Camshaft Position (CMP) Sensor Circuit (No Signal For 2 Seconds) 6E2-A-54
DTC 44 - Idle Switch Circuit (Circuit Open or Misadjusted) 6E2-A-56
DTC 45 - Idle Switch Circuit (Circuit Grounded or Misadjusted) 6E2-A-58
DTC 51 - Exhaust Gas Recirculation (EGR) Circuit (California) 6E2-A-60
DTC 53 - Ground Circuit (California) (Circuit Open) 6E2-A-62

1.6L (VIN U) "E/J" TRUCK

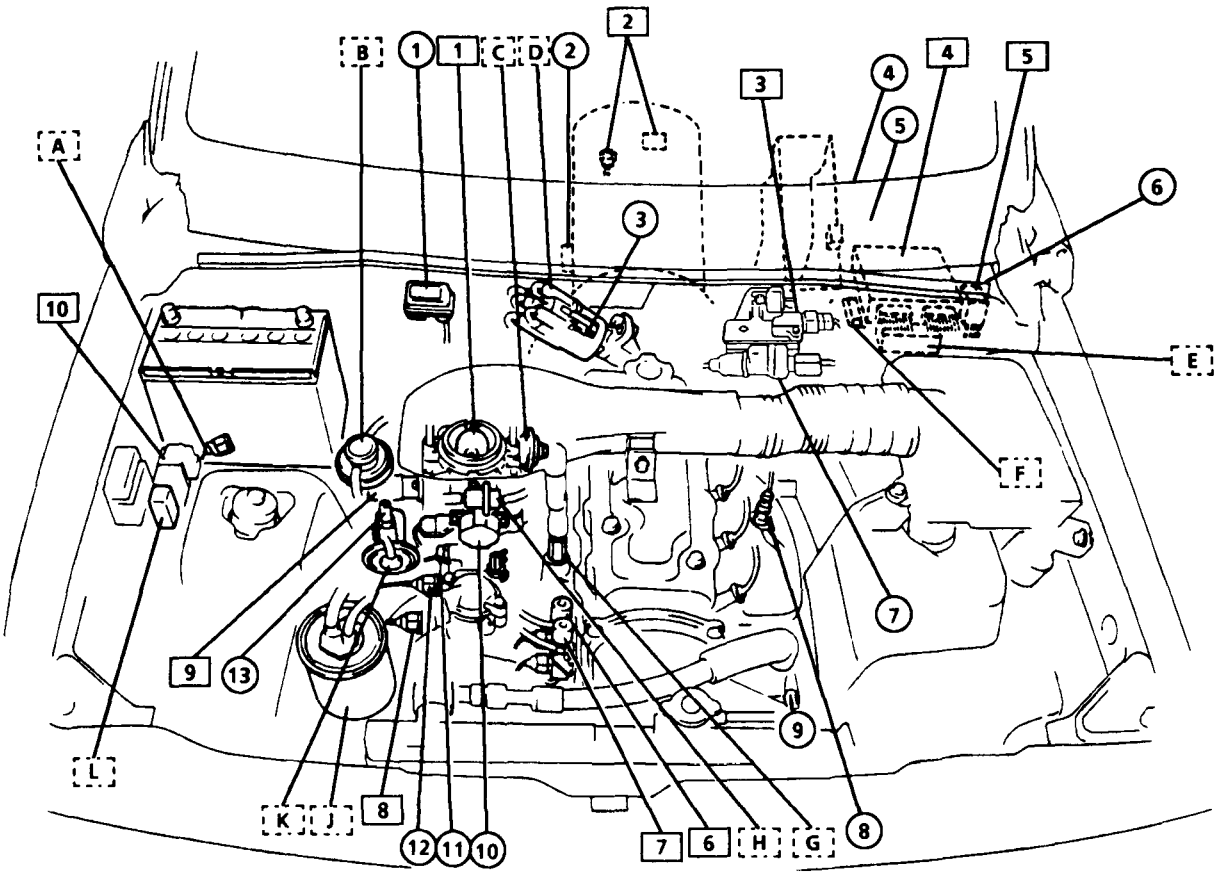

ECM INPUT AND INFORMATION SENSORS

1. Map Sensor
2. Park/Neutral Position (PNP) Switch (Automatic Transmission)
3. Camshaft Position (CMP) Sensor (In Distributor)
4. Vehicle Speed Sensor (VSS)
5. Malfunction Indicator Lamp (MIL) Cancel Switch (Federal)
6. Main Relay
7. Ignition Coil
8. Heated Oxygen Sensor (HO2S)
9. Power Steering Pressure Switch
10. Throttle Position (TP) Sensor
11. Intake Air Temperature (IAT) Sensor
12. Engine Coolant Temperature (ECT) Sensor
13. Exhaust Gas Recirculation (EGR) Temperature Sensor (California)

CONTROLLED DEVICES

1. Fuel Injector
2. Torque Converter Clutch (TCC) Solenoid and Fluid Pressure Switch (Automatic Transmission)
3. Igniter
4. Engine Control Module (ECM)
5. Fuel Pump Relay
6. Exhaust Gas Recirculation Solenoid Vacuum (EGR SV) Valve
7. Throttle Opener Solenoid Vacuum (TO SV) Valve
8. Evaporative Emission Solenoid Purge (EVAP SP) Valve
9. Idle Air Control (IAC) Valve
10. Torque Converter Clutch (TCC) Relay (Automatic Transmission)

RELATED COMPONENTS

A. Duty Check Data Link Connector (DLC)
B. Exhaust Gas Recirculation (EGR) Modulator
C. Throttle Opener
D. Distributor
E. Fuse Box
F. Data Link Connector (DLC)
G. Positive Crankcase Ventilation (PCV) Valve
H. Fuel Pressure Regulator
J. Evaporative Emission (EVAP) Canister
K. Exhaust Gas Recirculation (EGR) Valve
L. A/C Compressor Clutch Relay

7-1-92
PC6200-6E2-JT-RS

Figure A-1 - Component Locations 1.6L (VIN U) "E/J" Truck

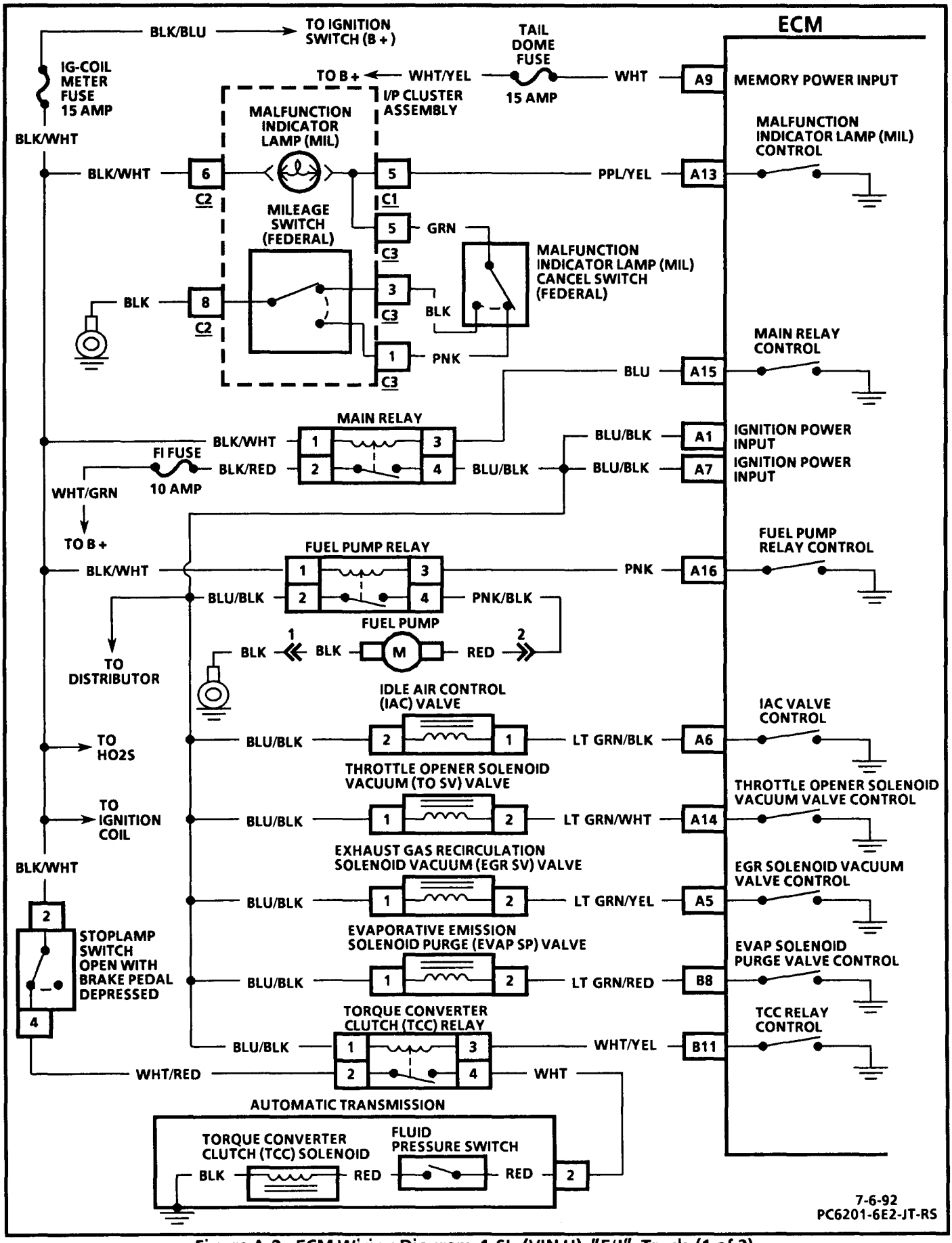

Figure A-2 - ECM Wiring Diagram 1.6L (VIN U) "E/J" Truck (1 of 3)

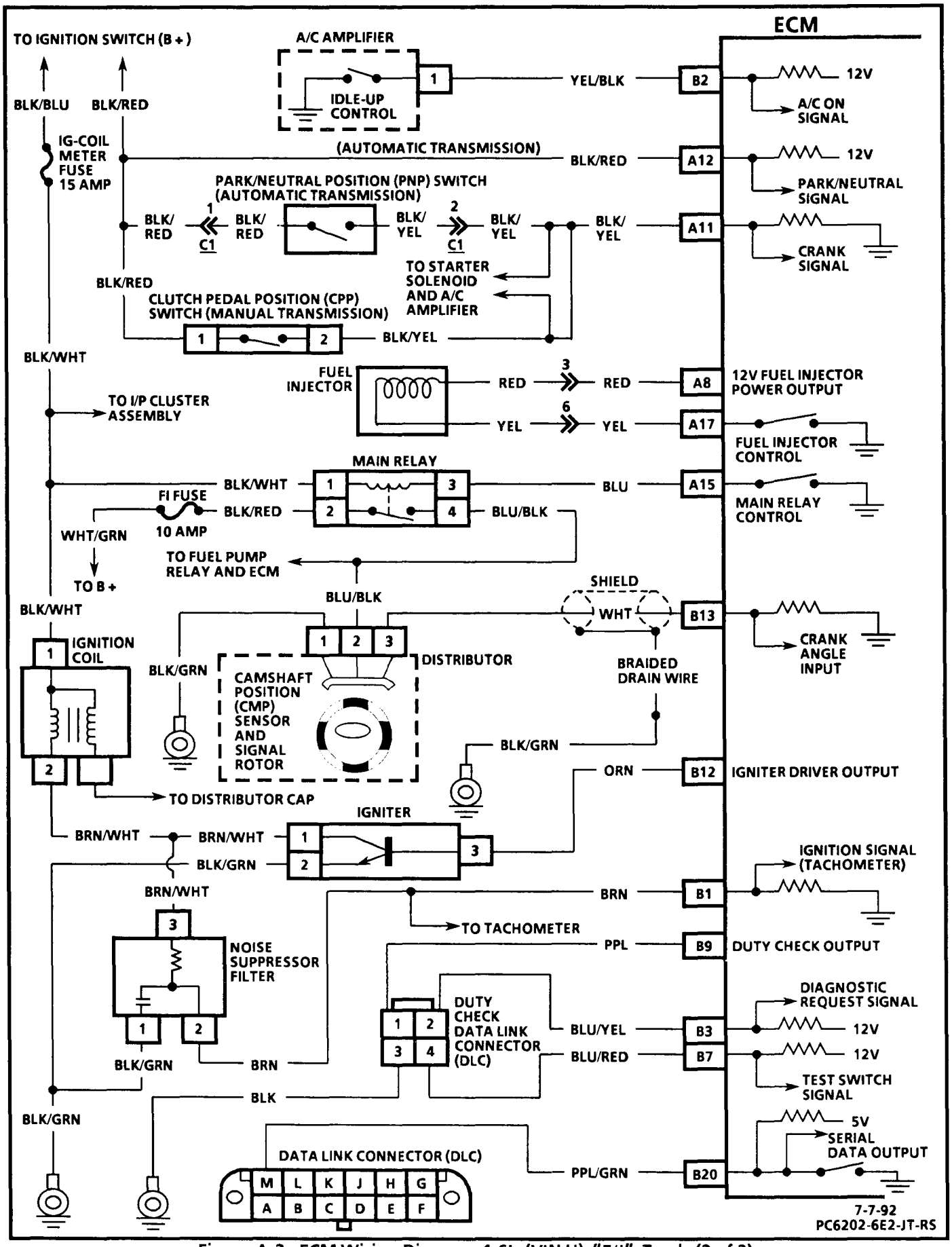

Figure A-3 - ECM Wiring Diagram 1.6L (VIN U) "E/J" Truck (2 of 3)

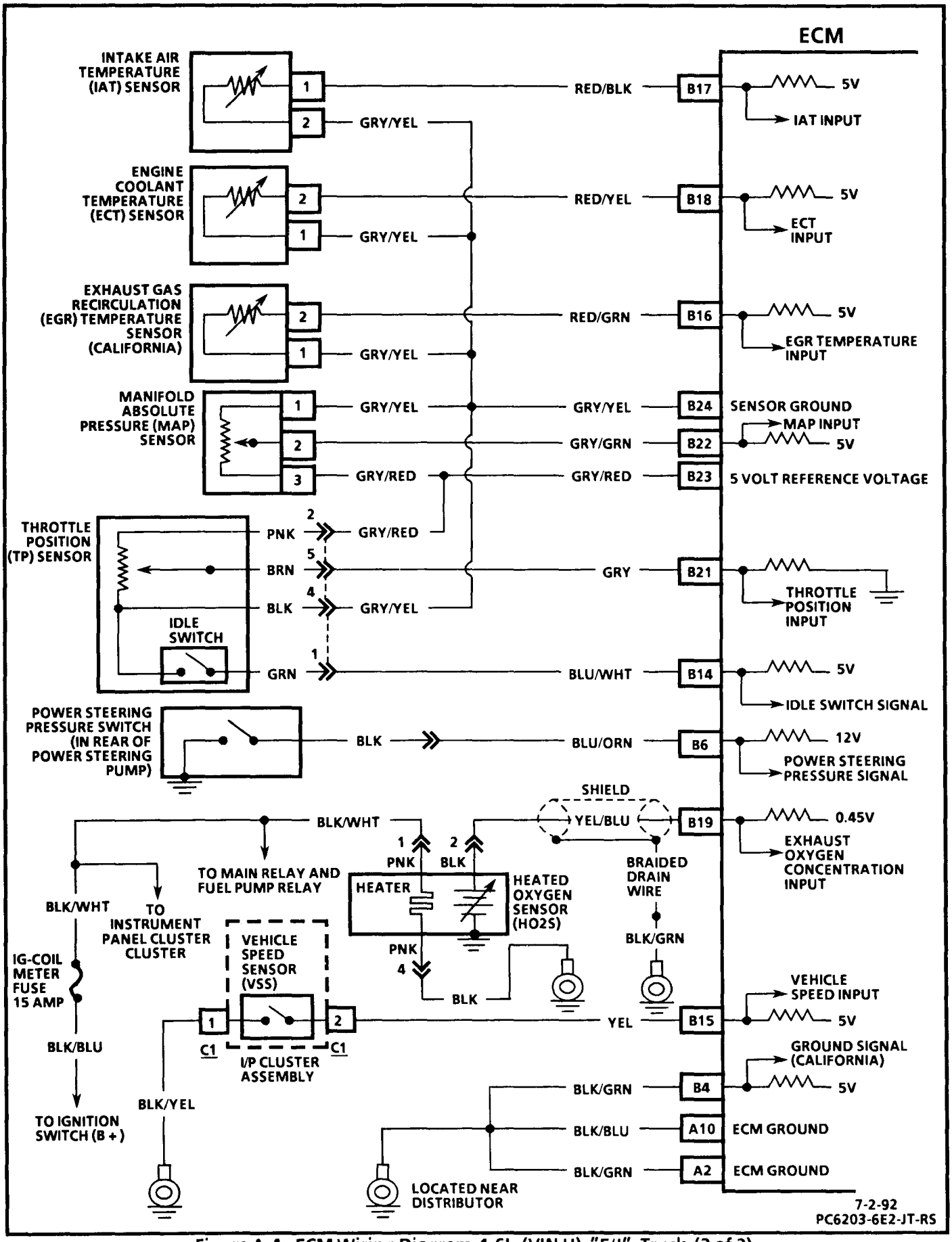

Figure A-4 - ECM Wiring Diagram 1.6L (VIN U) "E/J" Truck (3 of 3)

ECM CONNECTOR IDENTIFICATION

This following ECM voltage chart is for use with a digital multimeter to further aid in diagnosis. The voltages you get may vary due to low battery charge or other reasons, but they should be very close.

THE FOLLOWING CONDITIONS MUST BE MET BEFORE TESTING:

- Engine at operating temperature
- Engine idling (for "ENG. RUN" column)
- Test terminal not grounded
- All voltages shown "B + " indicate system voltage

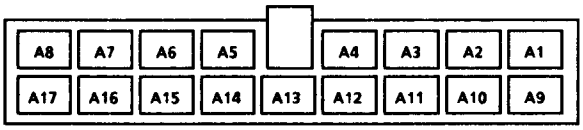

BACK VIEW OF ECM CONNECTOR C1 (GREEN)

CAVITY/ PIN	WIRE COLOR	CIRCUIT	VOLTAGE	
			KEY "ON"	ENG. RUN
1/A1	BLU/BLK	IGNITION POWER INPUT	B +	B +
2/A2	BLK/GRN	GROUND	0*	0*
3/A3	—	NOT USED	—	—
4/A4	—	NOT USED	—	—
5/A5	LT GRN/ YEL	EGR SOLENOID VACUUM VALVE CONTROL	B +	B +
6/A6	LT GRN/ BLK	IAC VALVE CONTROL	B +	B +
7/A7	BLU/BLK	IGNITION POWER INPUT	B +	B +
8/A8	RED	FUEL INJECTOR POWER OUTPUT	0*	B +
9/A9	WHT	MEMORY POWER INPUT	B +	B +
10/A10	BLK/BLU	GROUND	0*	0*
11/A11	BLK/YEL	CRANK SIGNAL	0* (1)	0*
12/A12	BLK/RED	PARK/NEUTRAL SIGNAL (AUTOMATIC TRANSMISSION)	0* (2)	0* (2)
13/A13	PPL/YEL	MALFUNCTION INDICATOR LAMP (MIL) CONTROL	0*	B +
14/A14	LT GRN/ WHT	THROTTLE OPENER SOLENOID VACUUM VALVE CONTROL	B +	B +
15/A15	BLU	MAIN RELAY CONTROL	0.8V	0.8V
16/A16	PNK	FUEL PUMP RELAY CONTROL	B + (3)	0*
17/A17	YEL	FUEL INJECTOR CONTROL	0*	B +

* Less than .5 volts.
(1) B + while cranking.
(2) B + in R, D, L, 2.
(3) 0V for 3 seconds.
(4) 0V with A/C "ON."
(5) 0V with wheels cramped.
(6) 0V with purge "ON."
(7) 5V off idle.
(8) Varies with vehicle speed.
(9) Varies with temperature.
(10) Varies with engine load.

7-7-92
PC6204-6E2-JT-RS

Figure A-5 - ECM Connector Terminal End View 1.6L (VIN U) (1 of 2)

ECM CONNECTOR IDENTIFICATION

This following ECM voltage chart is for use with a digital multimeter to further aid in diagnosis. The voltages you get may vary due to low battery charge or other reasons, but they should be very close.

THE FOLLOWING CONDITIONS MUST BE MET BEFORE TESTING:

- Engine at operating temperature
- Engine idling (for "ENG. RUN" column)
- Test terminal not grounded
- All voltages shown "B + " indicate system voltage

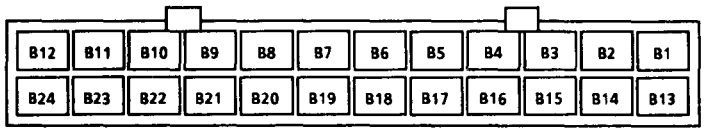

BACK VIEW OF ECM CONNECTOR C2 (YELLOW)

CAVITY/ PIN	WIRE COLOR	CIRCUIT	VOLTAGE	
			KEY "ON"	ENG. RUN
1/B1	BRN	IGNITION SIGNAL (TACHOMETER)	B +	B +
2/B2	YEL/BLK	A/C ON SIGNAL	B +	B + (4)
3/B3	BLU/YEL	DIAGNOSTIC REQUEST SIGNAL	B +	B +
4/B4	BLK/GRN	GROUND SIGNAL (CALIFORNIA)	0*	0*
5/B5	—	NOT USED	—	—
6/B6	BLU/ORN	POWER STEERING PRESSURE SIGNAL	B + (5)	B + (5)
7/B7	BLU/RED	TEST SWITCH SIGNAL	B +	B +
8/B8	LT GRN/ RED	EVAP SOLENOID PURGE VALVE CONTROL	B +	B + (6)
9/B9	PPL	DUTY CHECK OUTPUT	0*	0*
10/B10	—	NOT USED	—	—
11/B11	WHT/YEL	TCC RELAY CONTROL (AUTOMATIC TRANSMISSION)	B +	B +
12/B12	ORN	IGNITER DRIVER OUTPUT	0*	.2-.4V
13/B13	WHT	CRANK ANGLE INPUT	0*	1-2V
14/B14	BLU/WHT	IDLE SWITCH SIGNAL	5V	0*(7)
15/B15	YEL	VEHICLE SPEED INPUT	0-5V (8)	0-5V (8)
16/B16	RED/GRN	EGR TEMPERATURE INPUT (CALIFORNIA)	3-4.5V (9)	3-4.5V (9)
17/B17	RED/BLK	IAT INPUT	.5-3V (9)	.5-3V (9)
18/B18	RED/YEL	ECT INPUT	.5-3V (9)	.5-3V (9)
19/B19	YEL/BLU	EXHAUST OXYGEN CONCENTRATION INPUT	0*	0-.9V VARIES
20/B20	PPL/GRN	SERIAL DATA OUTPUT	5V	5V
21/B21	GRY	THROTTLE POSITION INPUT	.6-1.5V	.6-1.5V
22/B22	GRY/GRN	MAP INPUT	3-4V	1-5V (10)
23/B23	GRY/RED	REFERENCE VOLTAGE	5V	5V
24/B24	GRY/YEL	SENSOR GROUND	0*	0*

* Less than .5 volts.
(1) B + while cranking.
(2) B + in R, D, L, 2.
(3) 0V for 3 seconds.
(4) 0V with A/C "ON."
(5) 0V with wheels cramped.
(6) 0V with purge "ON."
(7) 5V off idle.
(8) Varies with vehicle speed.
(9) Varies with temperature.
(10) Varies with engine load.

7-7-92
PC6205-6E2-JT-RS

Figure A-6 - ECM Connector Terminal End View 1.6L (VIN U) (2 of 2)

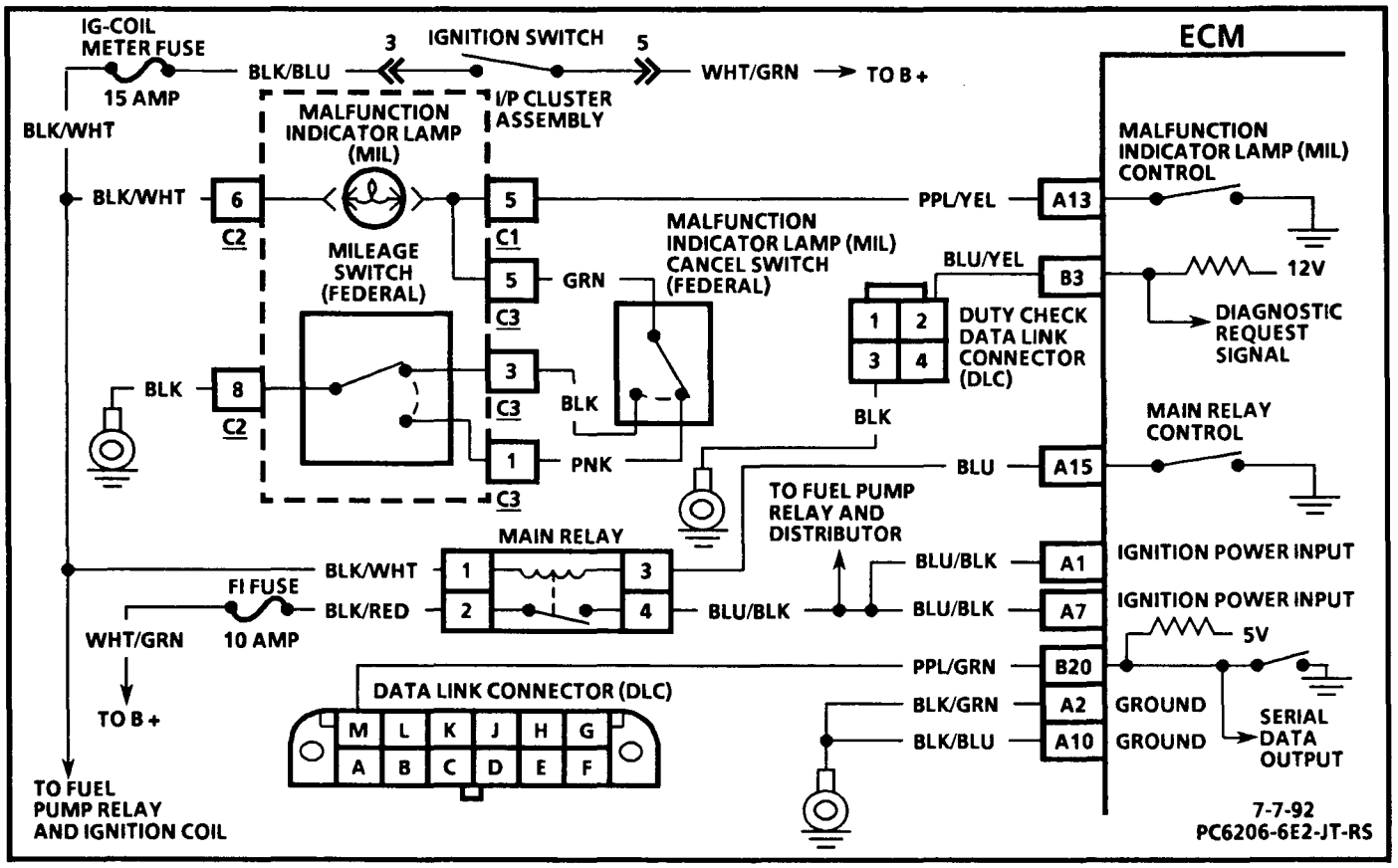

DIAGNOSTIC CIRCUIT CHECK

1.6L (VIN U) "E/J" TRUCK

Circuit Description:

The Diagnostic Circuit Check is an organized approach to identifying a problem created by an electronic engine control system malfunction. It must be the starting point for any driveability complaint diagnosis, because it directs the service technician to the next logical step in diagnosing the complaint. Understanding the chart and using it correctly will reduce diagnostic time and prevent the unnecessary replacement of good parts.

Test Description: Number(s) below refer to circled number(s) on the diagnostic chart.

1. Checks the MIL operation.
2. Checks to see if the ECM's self-diagnostic mode is operating.
3. Checks to see if the ECM's serial data output is operating.
4. Checks to see if vehicle will start.
5. Checks for any diagnostic trouble codes (DTCs) that are stored in the ECM's memory with the engine running.
6. Checks for any DTCs that are stored in the ECM's memory with the engine off.
7. Compares ECM's control data to typical data values.
8. Checks to see if codes are intermittent problems.

DIAGNOSTIC CIRCUIT CHECK

1.6L (VIN U) "E/J" TRUCK

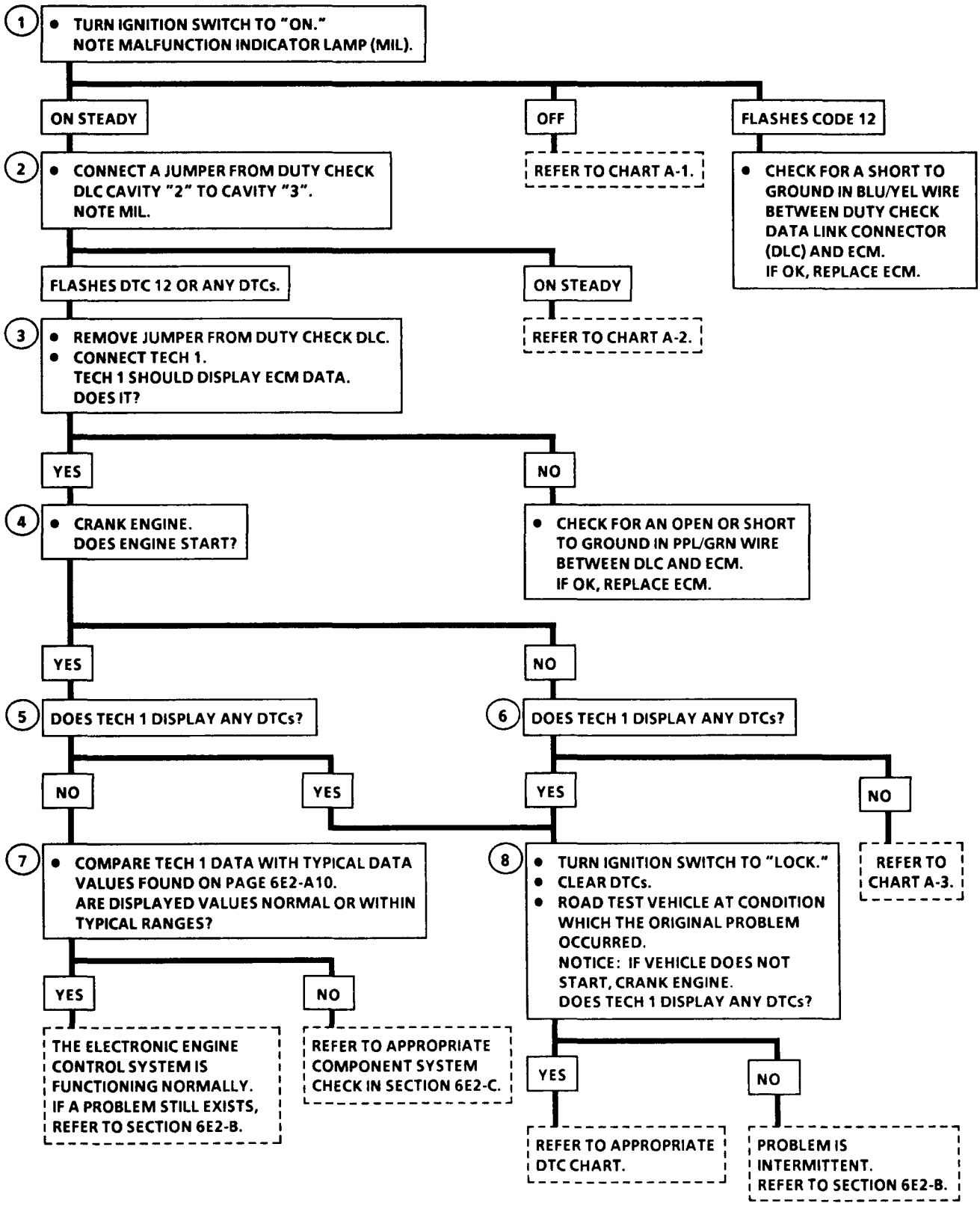

7-7-92
PC6207-6E2-JT-RS

If after completing the Diagnostic Circuit Check and finding the TECH 1 diagnostics functioning properly, and no diagnostic trouble codes (DTCs) stored in the ECM's memory, the "Typical Data Values" may be used for comparison with the values obtained on the vehicle being tested. The "Typical Data Values" are an average of display values recorded from normally operating vehicles and are intended to represent what a normally functioning system would display.

A "SCAN" TOOL THAT DISPLAYS FAULTY DATA SHOULD NOT BE USED AND THE PROBLEM SHOULD BE REPORTED TO THE MANUFACTURER. THE USE OF A FAULTY "SCAN" TOOL CAN RESULT IN MISDIAGNOSIS AND UNNECESSARY PARTS REPLACEMENT.

Only the parameters listed below are used in this manual for diagnosing . If a "Scan" tool reads other parameters, those values are not recommended by General Motors for use in diagnosis. If all values are within the ranges indicated, refer to SECTION 6E2-B.

TECH 1 DATA VALUES

Idle/Upper Radiator Hose Hot/Closed Throttle/Park/Neutral/Closed Loop/Accessories off

"Scan" Position	Units Displayed	Typical Data Value	For Component Information refer to Section
ENGINE SPEED	RPM	800 ± 50	6E2-C1
DESIRED IDLE	RPM	ECM Controls (varies)	6E2-C1
ENG. COOL TEMP	°C/°F	80° C-90° C (176° F-194° F)	6E2-C1
INTAKE AIR TEMP	°C/°F	65° C-75° C (149° F-167° F)	6E2-C1
THROT POSITION	VOLTS	.85-.95 VOLTS	6E2-C1
THROTTLE ANGLE	°	0°	6E2-C1
MAP	(kPa, V)	39 kPa/1.56 V	6E2-C1
BARO	(kPa, V)	98 kPa/4.00 V	6E2-C1
HO2S	mV	10-900 mV (Varies)	6E2-C1
RICH/LEAN STATUS	RICH/LEAN	Switches	6E2-C1
S. T. FUEL TRIM	–	127 (Counts)	6E2-C2
L. T. FUEL TRIM	–	118 (Counts)	6E2-C2
SPARK ADVANCE	°	5° - 15°	6E2-C1
INJ. PULSE WIDTH	mSEC	1.1 -1.6 mSEC	6E2-C1
ISC AIR FLOW	L/MIN	25-40 L/MIN	6E2-C2
ISC ADJUST MONIT	%	0%	6E2-C2
IDLE SWITCH	ON/OFF	ON	6E2-C1
THROT OPEN SOL.	ON/OFF	OFF	6E2-C1
A/C REQUEST	YES/NO	NO	6E2-C1
POWER STEERNG SW	ON/OFF	OFF	6E2-C1
EGR GAS TEMP	°C/°F*	60° C-65° C/140° F-145° F*	6E2-C7
EGR SOLENOID	ON/OFF	OFF	6E2-C7
PARK/NEUTRAL POS	P-N-- or -R-DL	P-N-- (Automatic Transmission) -R-DL (Manual Transmission)	6E2-C1
MPH/ km/h	MPH/km/h	0/0	6E2-C1
FUEL EVAP VSV	ON/OFF	OFF	6E2-C3
SYSTEM VOLTAGE	VOLTS	14.0-14.5 VOLTS	6E2-C1
ENGINE SPEED	RPM	800 ± 50	6E2-C1
TIME FROM START	SEC	Counts 0-510 SEC	N/A

* CALIFORNIA

7-1-92
PC6208-6E2-JT-RS

TECH 1 DATA DEFINITIONS

ECM DATA DESCRIPTIONS

A list of explanations for each message displayed on the Tech 1 "Scan" tool begins below. This information will assist in diagnosing driveability and emissions problems, since the displays can be viewed while driving the vehicle.

ENGINE SPEED - Range: 0 - 9999 RPM
Engine speed is calculated by the engine control module (ECM) from the ignition reference pulses it receives from the camshaft position (CMP) sensor. The ECM will keep this value close to the desired idle under various engine loads with the engine idling.

DESIRED IDLE - Range: 0 - 2000 RPM
The desired idle speed is an engine control module (ECM) requested speed. The ECM determines what this speed should be from the information it receives from various sensors throughout the vehicle.

ENG COOL TEMP - Range: -40°C - 120°C/-40°F - 250°F
The engine coolant temperature (ECT) sensor is a thermistor (a variable resistor that changes with temperature) in series with a fixed resistor in the engine control module (ECM). The ECM provides a 5 volt reference voltage to the ECT sensor. The ECM reads the voltage across the ECT sensor and calculates this voltage reading into a temperature reading. A low voltage reading at the ECM indicates a hot engine and a high voltage reading at the ECM indicates a cold engine.

INTAKE AIR TEMP - Range: -40°C - 120°C/-40°F - 250°F
The intake air temperature (IAT) sensor is a thermistor (a variable resistor that changes with temperature) in a series with a fixed resistor in the engine control module (ECM). The ECM provides a 5 volt reference voltage to the IAT sensor. The ECM reads the voltage across the IAT sensor and calculates this voltage reading into a temperature reading to control the air/fuel mixture and spark timing. A low voltage reading at the ECM indicates that the intake air is warm and a high voltage reading at the ECM indicates that the intake air is cold.

THROT POSITION - Range: 0 - 5.10 VOLTS
The throttle position (TP) sensor has a potentiometer whose resistance changes with the throttle valve position. The engine control module (ECM) provides a 5 volt reference voltage to the TP sensor. The ECM reads the voltage across the TP sensor and converts it into throttle position. When the TP sensor resistance decreases (throttle valve opening increases), the voltage being monitored at the ECM increases. When the TP sensor resistance increases (throttle valve opening decreases), the voltage being monitored at the ECM decreases.

THROTTLE ANGLE - Range: 0°-90°
The throttle angle parameter displays the throttle position in degrees. The Tech 1 will display "0" when the throttle valve is fully closed, and will display about "80" when the throttle valve is fully opened.

MAP - Range: 0 - 125 kPa/0 - 5.10 V
The manifold absolute pressure (MAP) sensor measures the change in the intake manifold pressure. This change in pressure, that results from engine load and rpm changes, is converted into a voltage reading that is monitored by the engine control module (ECM). A low voltage reading at the ECM indicates low manifold pressure, and a high voltage reading at the ECM indicates high manifold pressure.

BARO - Range: 0 - 125 kPa/0 - 950 mmHg
This parameter is used to measure barometric air pressure. The engine control module (ECM) adjusts the air/fuel mixture to accommodate the change in altitude.

HO2S - Range: 0 - 2500 mV
The heated oxygen sensor (HO2S) is the primary input to the fuel delivery system. The engine control module (ECM) monitors the HO2S voltage, when the system is in closed loop operation. When the voltage reading is high, the air/fuel mixture is rich, and when the voltage reading is low the air/fuel mixture is lean. Under normal operating conditions, the voltage reading should constantly fluctuate.

RICH/LEAN STATUS - Range: Tech 1 displays "RICH" or "LEAN"
This parameter displays the status of the oxygen concentration in the air/fuel mixture. When the heated oxygen sensor (HO2S) voltage is high, the Tech 1 will display "RICH," and when the HO2S voltage is low, the Tech 1 will display "LEAN."

S. T. FUEL TRIM - Range: 0 - 255
This value represents the short term corrections to the air/fuel mixture computation. A value of 128 indicates that no correction is necessary. A value below 128 indicates an enleanment condition, and a value above 128 indicates an enrichment condition.

L. T. FUEL TRIM - Range: - 1.00 - 1.00
This value represents the long-term corrections to the air/fuel mixture computation. A value of 128 indicates that no correction is required. A value below 128 indicates an enleanment condition, and a value above 128 indicates an enrichment condition.

SPARK ADVANCE - Range: -10° - 60°
This displays the engine control module (ECM) controlled value that is being used to control the spark timing.

INJ. PULSE WIDTH - Range: 0 -65 mSEC
This value is the amount of time, in milliseconds, that the engine control module (ECM) is commanding the fuel injector to stay on during combustion. A shorter on time yields a leaner air/fuel mixture, and a longer on time yields richer air/fuel mixture.

ISC AIR FLOW - Range: 0 - 250 L/MIN
This parameter represents the quantity of the bypass airflow through the idle air control (IAC) valve.

ISC ADJUST MONIT - Range: 0 - 100%
This parameter indicates the amount by which the current airflow has deviated from its standard value for idle adjustment. When 50% is indicated, there is no deviation and idle adjustment is complete. This value is only effective when in the ISC CAL MODE.

IDLE SWITCH - Range: Tech 1 displays "ON" or OFF"
This parameter indicates the throttle valve position. The Tech 1 will display "ON" when the throttle valve is fully closed, and will display "OFF" when it is opened.

THROT OPEN SOL. - Range: Tech 1 displays "ON" or "OFF"
This parameter displays the throttle opener solenoid vacuum (TO SV) valve status. The Tech 1 will display "ON" when the TO SV valve is energized, and display "OFF" when it is de-energized. The TO SV valve is used to increase the opening of the throttle valve during cold start-ups.

A/C REQUEST - Range: Tech 1 displays "YES" or "NO"
This parameter displays the status of the A/C system. If the A/C has been requested (A/C switch on), the Tech 1 will display "YES." If the A/C has not been requested (A/C switch off), the Tech 1 will display "NO." The engine control module (ECM) will use this information to increase engine idle speed, when required.

POWER STEERNG SW - Range: Tech 1 displays "ON" or "OFF"
This indicates whether the steering is being assisted by the power steering pump. The Tech 1 will display "ON" when the front wheels are turned all the way to the right or left. When the need for assisted steering no longer exists, the Tech 1 will display "OFF."

EGR GAS TEMP - Range: 0° C - 240° C/32° F - 470° F
This parameter is used to measure the temperature of the exhaust gases that flow into the intake manifold on California emissions equipped vehicles. The engine control module (ECM) uses this temperature reading to determine when to energize and de-energize the exhaust gas recirculation solenoid vacuum (EGR SV) valve, thus controlling the amount of exhaust gases that flow into the intake manifold.

EGR SOLENOID - Range: Tech 1 displays "ON" or "OFF"
This parameter displays the status of the exhaust gas recirculation solenoid vacuum (EGR SV) valve. When the Tech 1 displays "ON," the EGR SV valve is energized, thus allowing allowing exhaust gases to flow into the intake manifold. When the Tech 1 displays "OFF," the EGR SV valve is de-energized, forbidding any exhaust gases to flow into the intake manifold.

PARK/NEUTRAL POS - Range: Tech 1 displays "P-N--" or "-R-DL"
This parameter displays the manual selector's position with vehicles equipped with an automatic transmission. When the manual selector is in the "P" or "N" position, the Tech 1 will display "P-N--." When the manual selector is in the "R," "D," "2" or "L" position, the Tech 1 will display "-R-DL." The Tech 1 will always display "-R-DL" on vehicles equipped with a manual transmission.

MPH/km/h - Range: 0 - 200 km/h/0 - 125 MPH
This parameter displays the vehicle speed. The engine control module (ECM) receives reference pulses from the vehicle speed sensor (VSS) and converts them into km/h and MPH for display.

FUEL EVAP VSV - Range: Tech 1 displays "ON" or "OFF"
An evaporative emission (EVAP) canister is used to capture the gas vapors emitted from the fuel tank. When the engine control module (ECM) energizes the evaporative emission solenoid purge (EVAP SP) valve, the fumes are allowed to flow into the intake manifold and the Tech 1 will display "ON." When the ECM determines that there is no longer a need for the gas vapors in the intake manifold, the ECM will de-energize the EVAP SP valve, and the Tech 1 will display "OFF."

SYSTEM VOLTAGE - Range: 0 - 18.75 VOLTS
This value is the system voltage reading that is detected at the engine control module (ECM).

ENGINE SPEED - Range: 0 - 9999 RPM
Engine speed is calculated by the engine control module (ECM) from the ignition reference pulses it receives from the camshaft position (CMP) sensor. The ECM will keep this value close to the desired idle under various engine loads with the engine idling.

TIME FROM START - Range: 0-510 SEC
This parameter indicates the amount of time, in seconds, that has elapsed since the last time the engine has been started. When the engine is stopped and restarted, the time will reset to 0 seconds. The counter only counts up to 510 seconds and then stops.

BLANK

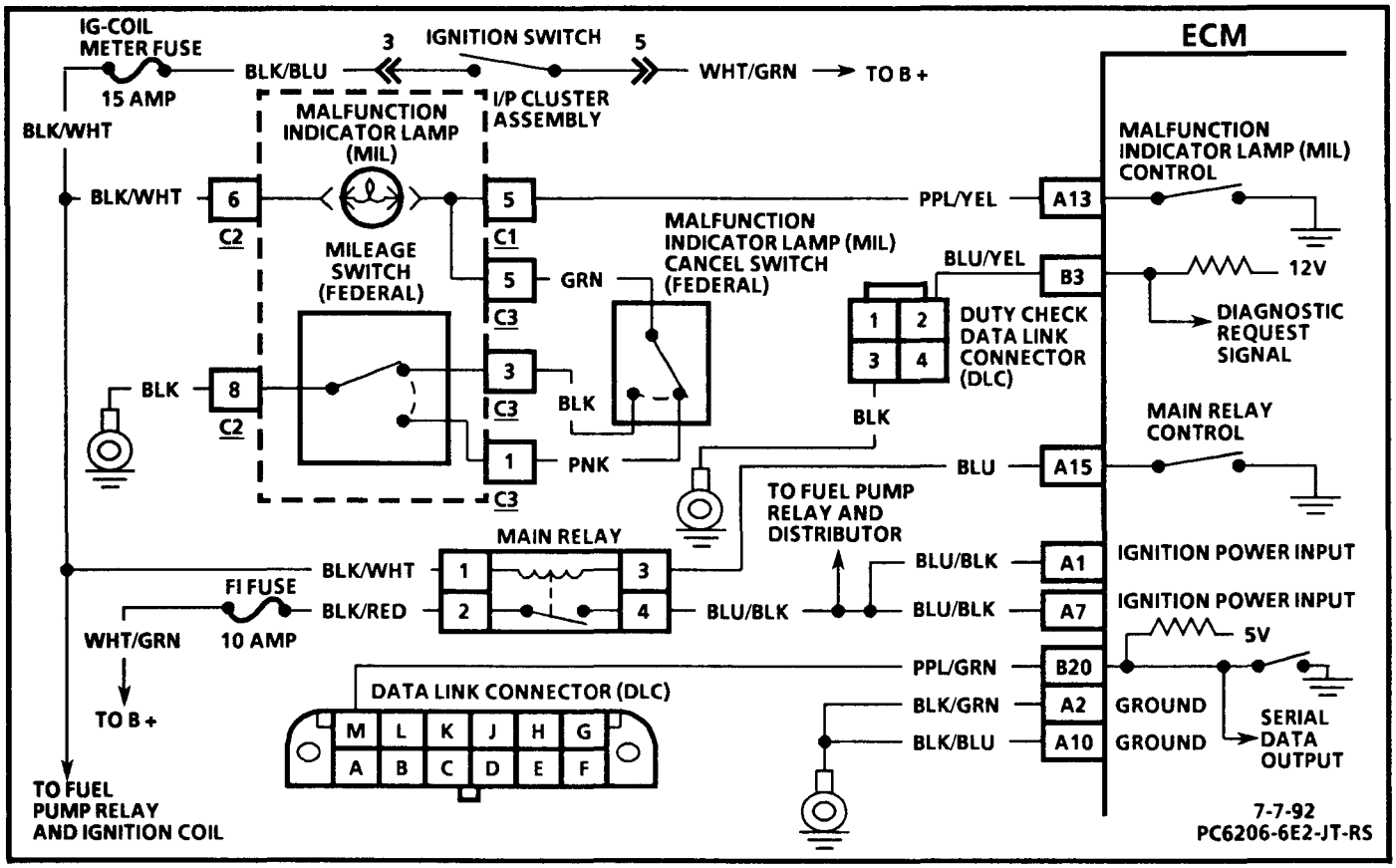

CHART A-1

NO MALFUNCTION INDICATOR LAMP (MIL) 1.6L (VIN U) "E/J" TRUCK

Circuit Description:

There should always be a steady malfunction indicator lamp (MIL) when the ignition switch is in the "ON" position and the engine is not running. System voltage is applied to the indicator bulb. The engine control module (ECM) will control the MIL and turn it "ON" by providing a ground path through the PPL/YEL wire to the ECM.

Test Description: Number(s) below refer to circled number(s) on the diagnostic chart.

1. Checks to see if ECM is receiving power.
2. Checks to see if ECM is faulty.
3. Checks for an open in BLU/BLK wire between main relay and ECM.
4. Checks to see if ECM has a good ground.
5. Checks for an open in BLK/WHT wire to I/P and PPL/YEL wire to ECM.
6. Checks to see if main relay switch is receiving power.
7. Checks to see if main relay coil is receiving power.
8. Checks to see if main relay or ECM is faulty, or an open in BLU wire between main relay and ECM.
9. Checks for a faulty ignition switch or an open in BLU/BLK or BLK/WHT wires to IG-COIL METER Fuse.

Diagnostic Aids:

Be sure to check connectors for contamination, corrosion or bent terminals.

CHART A-1

NO MALFUNCTION INDICATOR LAMP (MIL) 1.6L (VIN U) "E/J" TRUCK

FROM DIAGNOSTIC CIRCUIT CHECK.

IMPORTANT: MAKE SURE THAT DIAGNOSTIC CIRCUIT CHECK HAS BEEN PERFORMED BEFORE CONTINUING DIAGNOSIS.

DOES ENGINE START?

NO

(1)
- TURN IGNITION SWITCH TO "ON."
- BACKPROBE ECM CONNECTOR C1 WITH A TEST LIGHT FROM CAVITY "A1," TO GROUND, THEN FROM CAVITY "A7" TO GROUND.

DOES TEST LIGHT LIGHT AT BOTH CAVITIES?

NO

(3)
- BACKPROBE MAIN RELAY CONNECTOR WITH A TEST LIGHT FROM CAVITY "4" TO GROUND. TEST LIGHT SHOULD LIGHT. DOES IT?

YES

(4)
- TURN IGNITION SWITCH TO "LOCK."
- DISCONNECT ECM CONNECTOR C1.
- WITH A TEST LIGHT TO B+, PROBE CONNECTOR CAVITIES "A2" AND "A10". TEST LIGHT SHOULD LIGHT AT BOTH CAVITIES. DOES IT?

YES
- CHECK FOR A POOR CONNECTION AT ECM. IF OK, REPLACE ECM.

NO
- CHECK FOR A CLEAN GROUND CONNECTION.
- CHECK FOR AN OPEN IN BLK/GRN OR BLK/BLU WIRE.

YES

(2)
- TURN IGNITION SWITCH TO "LOCK."
- DISCONNECT ECM CONNECTOR C1.
- TURN IGNITION SWITCH TO "ON."
- CONNECT A JUMPER FROM ECM CONNECTOR C1 CAVITY "A13" TO GROUND.

IS THE MALFUNCTION INDICATOR LAMP (MIL) "ON"?

NO

(5)
- BACKPROBE I/P CLUSTER ASSEMBLY CONNECTOR C1 WITH A TEST LIGHT FROM TERMINAL "5" TO GROUND. IS THE MIL "ON"?

YES
- CHECK FOR A POOR CONNECTION AT ECM. IF OK, REPLACE ECM.

NO
- CHECK FOR OPEN INDICATOR BULB OR OPEN I/P PRINTED CIRCUIT.
- CHECK FOR A POOR CONNECTION AT I/P. IF OK, REPAIR OPEN IN BLK/WHT WIRE TO I/P.

YES
- CHECK FOR A POOR CONNECTION AT I/P. IF OK, REPAIR OPEN IN PPL/YEL WIRE TO ECM.

NO

(6)
- BACKPROBE MAIN RELAY CONNECTOR WITH A TEST LIGHT FROM CAVITY "2" TO GROUND. TEST LIGHT SHOULD LIGHT. DOES IT?

YES
- REPAIR OPEN IN BLU/BLK WIRE.

YES

(7)
- BACKPROBE MAIN RELAY CONNECTOR WITH A TEST LIGHT FROM CAVITY "1" TO GROUND. TEST LIGHT SHOULD LIGHT. DOES IT?

NO
- CHECK FI FUSE. IF OK, REPAIR OPEN IN BLK/RED OR WHT/GRN WIRE.

YES

(8)
- REMOVE MAIN RELAY.
- CONNECT A TEST LIGHT FROM MAIN RELAY CONNECTOR CAVITY "3" TO B+. TEST LIGHT SHOULD LIGHT. DOES IT?

NO
- CHECK FOR POOR CONNECTION AT ECM.
- CHECK FOR AN OPEN IN BLU WIRE. IF OK, REPLACE ECM.

YES
- REPLACE MAIN RELAY.

NO

(9)
- BACKPROBE IGNITION SWITCH CONNECTOR WITH A TEST LIGHT FROM CAVITY "3" TO GROUND. TEST LIGHT SHOULD LIGHT. DOES IT?

YES
- CHECK IG-COIL METER FUSE. IF OK, REPAIR OPEN IN BLK/BLU OR BLK/WHT WIRE.

NO
- CHECK FOR A POOR CONNECTION AT IGNITION SWITCH. IF OK, REPLACE IGNITION SWITCH.

7-7-92/PC6209-6E2-JT-RS

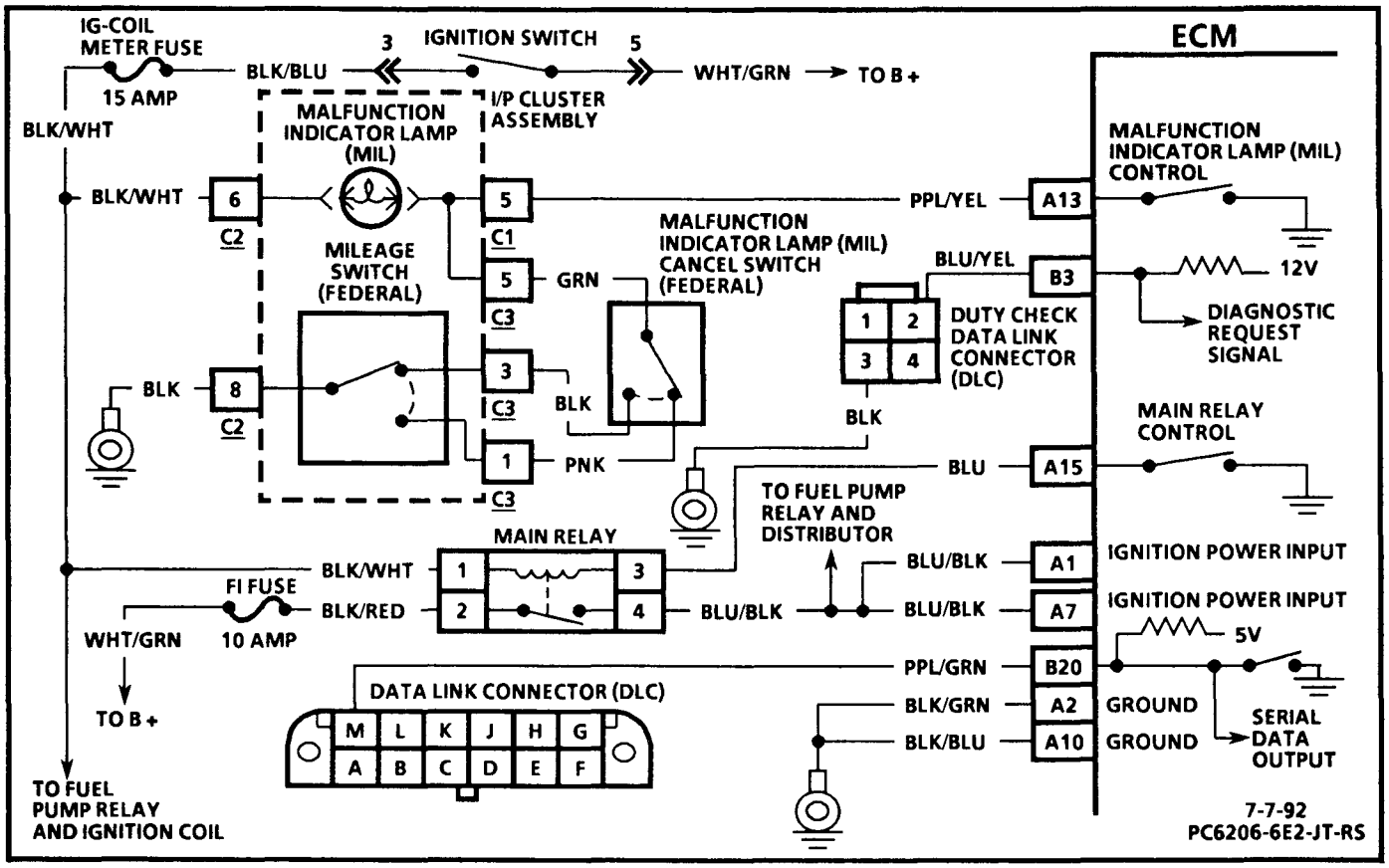

CHART A-2

WILL NOT FLASH DTC 12 OR ANY DTCs, MALFUNCTION INDICATOR LAMP (MIL) "ON" STEADY 1.6L (VIN U) "E/J" TRUCK

Circuit Description:

The malfunction indicator lamp (MIL) will flash diagnostic trouble codes (DTCs) when the diagnostic request terminal in the duty check data link connector (DLC) is grounded. On vehicles equipped with Federal Emissions, the MIL is also activated by a mileage switch at 50,000, 80,000 and 100,000 miles to alert the driver that the vehicle is in need of regular maintenance service. Once service has been performed, the malfunction indicator lamp (MIL) cancel switch should be reset. The MIL cancel switch is located behind the instrument panel, attached to the I/P next to left speaker.

Test Description:

Number(s) below refer to circled number(s) on the diagnostic chart.

1. Checks for a short to ground in PPL/YEL wire.
2. Checks for a faulty ECM or an open in BLU/YEL and BLK wires to duty check DLC.
3. Checks for a short to ground in I/P printed circuit.
4. Checks to see if MIL cancel switch or mileage switch is faulty.

Diagnostic Aids:

On vehicles equipped with Federal Emissions, the MIL cancel switch must be reset after 50,000, 80,000 and 100,000 miles after maintenance service has been completed for the MIL to go out.

CHART A-2

WILL NOT FLASH DTC 12 OR ANY DTCs MALFUNCTION INDICATOR LAMP (MIL) "ON" STEADY 1.6L (VIN U) "E/J" TRUCK

NOTICE: ON VEHICLES EQUIPPED WITH FEDERAL EMISSIONS, MAKE CERTAIN THAT THE ODOMETER DOES NOT SHOW 50,000, 80,000 OR 100,000 MILES. IF IT DOES, PERFORM THE MAINTENANCE SERVICE IN SECTION 0B BEFORE PROCEEDING.

IMPORTANT: MAKE SURE THAT DIAGNOSTIC CIRCUIT CHECK HAS BEEN PERFORMED BEFORE CONTINUING DIAGNOSIS.

FROM DIAGNOSTIC CIRCUIT CHECK.

IS FUEL PUMP RELAY CLICKING RAPIDLY?

- NO
  - (1)
    - TURN IGNITION SWITCH TO "LOCK."
    - DISCONNECT ECM CONNECTOR C1.
    - REMOVE JUMPER FROM DUTY CHECK DLC.
    - TURN IGNITION SWITCH TO "ON."
    - IS MIL "ON"?
  - YES
    - IS VEHICLE EQUIPPED WITH FEDERAL EMISSIONS?
    - YES
      - (3)
        - DISCONNECT I/P CLUSTER ASSEMBLY CONNECTOR C3.
        - IS MIL "ON"?
      - NO
        - (4)
          - CONNECT A TEST LIGHT FROM I/P CLUSTER ASSEMBLY CONNECTOR C3 TERMINAL "1" (I/P SIDE) AND THEN TERMINAL "3" (I/P SIDE) TO B+.
          - DOES THE TEST LIGHT LIGHT AT ONE OR BOTH OF THE TERMINALS?
        - ONE
          - REPLACE MIL CANCEL SWITCH.
        - BOTH
          - CHECK I/P PRINTED CIRCUIT FOR A SHORT TO GROUND. IF OK, REPLACE MILEAGE SWITCH.
      - YES
        - REPAIR SHORT TO GROUND IN I/P PRINTED CIRCUIT.
    - NO
      - REPAIR SHORT TO GROUND IN PPL/YEL WIRE OR IN I/P PRINTED CIRCUIT.
- YES
  - CHECK FOR AN OPEN IN BLU/BLK WIRES TO ECM. IF OK, REPLACE ECM.
- NO
  - (2)
    - TURN IGNITION SWITCH TO "LOCK."
    - RECONNECT ECM CONNECTOR C1.
    - TURN IGNITION SWITCH TO "ON."
    - BACKPROBE ECM CONNECTOR C1 WITH A TEST LIGHT FROM CAVITY "B3" TO GROUND.
    - IS MIL FLASHING DTC 12 OR ANY DTCs?
  - NO
    - CHECK FOR POOR CONNECTION AT ECM. IF OK, REPLACE ECM.
  - YES
    - CHECK FOR AN OPEN IN BLU/YEL WIRE TO ECM.
    - CHECK FOR AN OPEN IN BLK WIRE TO DUTY CHECK DLC.

7-1-92
PC6210-6E2-JT-RS

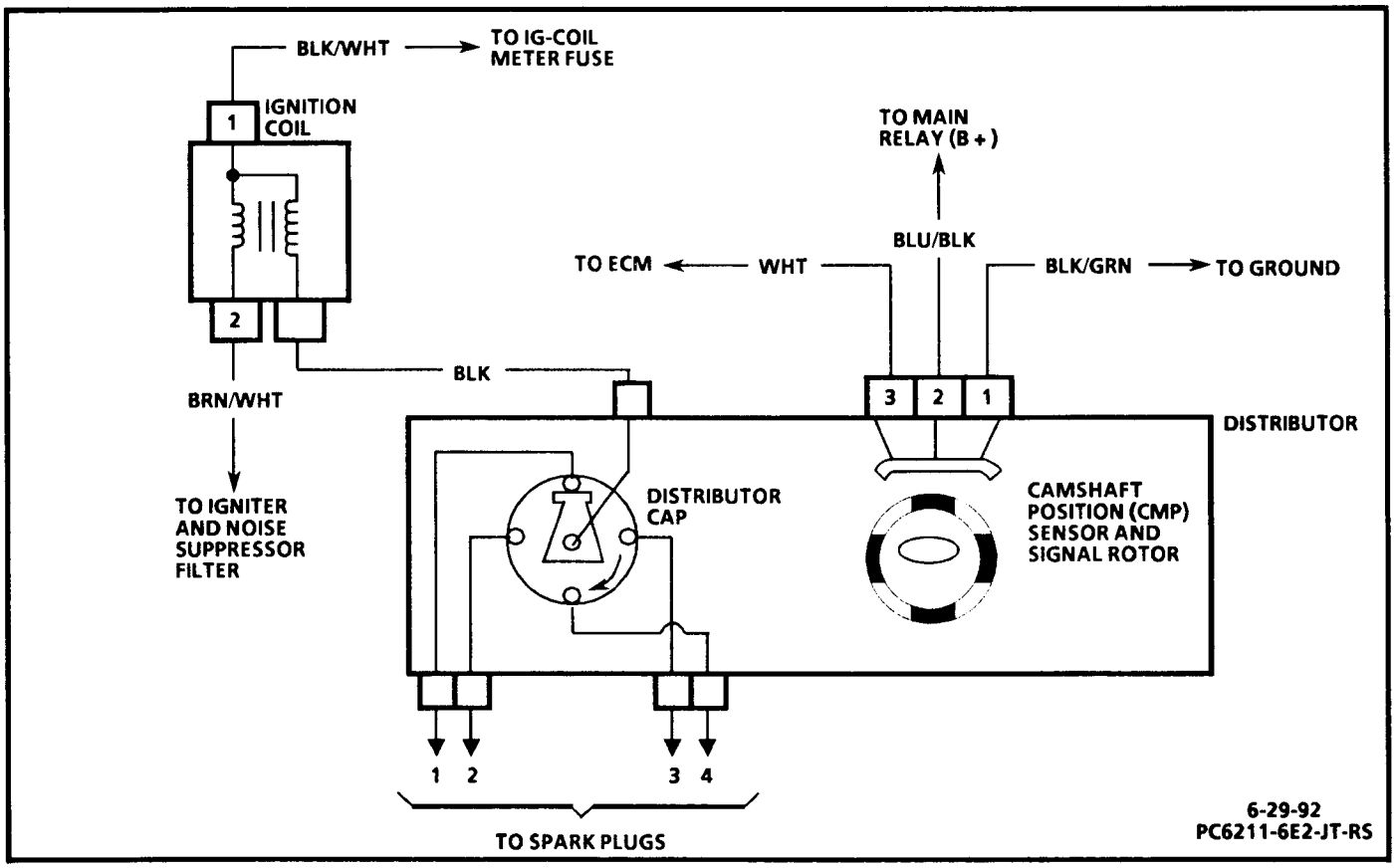

CHART A-3

ENGINE CRANKS BUT WILL NOT RUN 1.6L (VIN U) "E/J" TRUCK

Circuit Description:

Before using this chart, battery condition, engine cranking speed, and fuel quantity should be checked and verified as being OK.

When the ignition switch is turned to the "ON" or "START" position, the main relay applies battery voltage to the ignition coil. If the ignition coil's primary coil is being toggled to ground through the igniter, sending a signal to the engine control module (ECM) a high voltage is induced in the secondary windings of the ignition coil and is applied through the distributor to the spark plugs.

Test Description:

Number(s) below refer to circled number(s) on the diagnostic chart.

1. Checks to see if any diagnostic trouble codes (DTCs) are stored in ECM's memory.
2. Checks for spark at ignition coil.
3. Checks for spark at distributor.
4. Checks for spark at spark plugs.

Diagnostic Aids:

- Water or foreign material can cause a no start during freezing weather. The engine may start after 5 or 6 minutes in a heated shop. The problem may not recur until an overnight park in freezing temperatures.
- Fuel pressure: Low fuel pressure can result in a very lean air/fuel ratio.
- Fouled or damaged spark plugs will cause an "Engine Cranks But Will Not Run" condition. Refer to Section 6D4 for spark plug inspection.

CHART A-3

ENGINE CRANKS BUT WILL NOT RUN 1.6L (VIN U) "E/J" TRUCK

IMPORTANT: MAKE SURE THAT DIAGNOSTIC CIRCUIT CHECK HAS BEEN PERFORMED BEFORE CONTINUING DIAGNOSIS.

FROM DIAGNOSTIC CIRCUIT CHECK.

1
- TURN IGNITION SWITCH TO "LOCK."
- CONNECT TECH 1.
- CRANK ENGINE.

ARE ANY DIAGNOSTIC TROUBLE CODES (DTCs) PRESENT?

YES → REFER TO APPROPRIATE DTC CHART.

NO →

2
- TURN IGNITION SWITCH TO "LOCK."
- DISCONNECT SECONDARY COIL WIRE FROM IGNITION COIL.
- CONNECT A J 26792 TO IGNITION COIL SECONDARY WIRE TERMINAL.
- CHECK FOR SPARK WHILE CRANKING ENGINE.

SHOULD HAVE SPARK.
DOES IT?

NO → REPLACE IGNITION COIL.

YES →

3
- TURN IGNITION SWITCH TO "LOCK."
- DISCONNECT THE J 26792 FROM IGNITION COIL.
- RECONNECT SECONDARY COIL WIRE TO IGNITION COIL.
- DISCONNECT SPARK PLUG WIRES FROM DISTRIBUTOR.
- CONNECT THE J 26792 TO DISTRIBUTOR SPARK PLUG WIRE TERMINALS.
- CHECK FOR SPARK (AT EACH TERMINAL) WHILE CRANKING ENGINE.

ALL SHOULD HAVE SPARK.
DO THEY?

NO →
- CHECK SECONDARY COIL WIRE, DISTRIBUTOR CAP AND ROTOR FOR POOR CONNECTIONS OR OPENS. REFER TO SECTION 6D4.

YES →

4
- TURN IGNITION SWITCH TO "LOCK."
- DISCONNECT THE J 26792 FROM DISTRIBUTOR.
- RECONNECT SPARK PLUG WIRES TO DISTRIBUTOR.
- DISCONNECT SPARK PLUG WIRES FROM SPARK PLUGS.
- CONNECT THE J 26792 TO SPARK PLUG WIRES.
- CHECK FOR SPARK (AT EACH WIRE) WHILE CRANKING ENGINE.

ALL SHOULD HAVE SPARK.
DO THEY?

NO → REPLACE FAULTY SPARK PLUG WIRE(S).

YES →
- DISCONNECT THE J 26792 FROM SPARK PLUG WIRE(S).
- SEE "DIAGNOSTIC AIDS."
- REFER TO CHART A-5.

7-7-92
PC6212-6E2-JT-RS

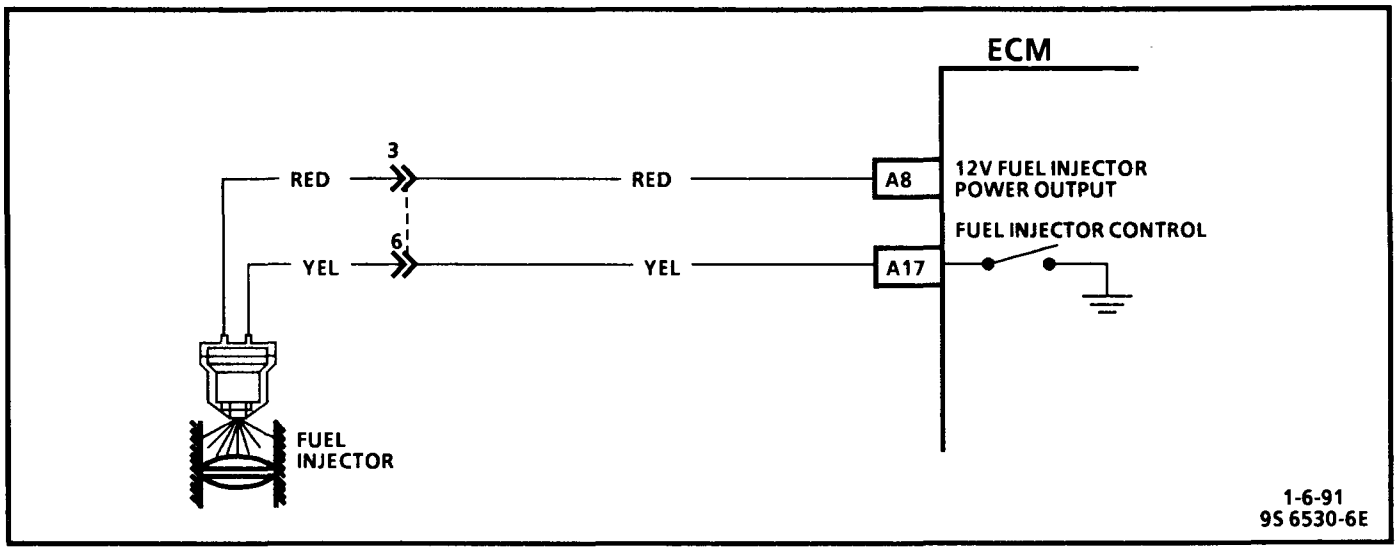

CHART A-5

FUEL INJECTOR CIRCUIT CHECK
(ENGINE NO-START)
1.6L (VIN U) "E/J" TRUCK

Circuit Description:

When the solenoid coil of the fuel injector is energized by the engine control module (ECM) it will activate the plunger and pressurized fuel will be injected into the throttle body fuel injection (TBI) unit. The fuel pump will operate as long as the engine is cranking, and the ECM is receiving ignition reference pulses. If the ECM does not receive any reference pulses, the fuel pump will stop after three seconds.

Test Description:

Number(s) below refer to circled number(s) on the diagnostic chart.

1. Checks to see if the ECM is controlling the fuel injector signals.
2. Checks the fuel injector for correct resistance.
3. Checks for an open or short to ground in RED or YEL wires to ECM or for a faulty ECM.

Diagnostic Aids:

- There may be fuel spray at the fuel injector, but it may not be enough to start the engine. If both the fuel injector and the circuit are OK, the fuel injector nozzle may be partly blocked.

CHART A-5

FUEL INJECTOR CIRCUIT CHECK (ENGINE NO-START) 1.6L (VIN U) "E/J" TRUCK

IMPORTANT: MAKE SURE THAT DIAGNOSTIC CIRCUIT CHECK HAS BEEN PERFORMED BEFORE CONTINUING DIAGNOSIS.

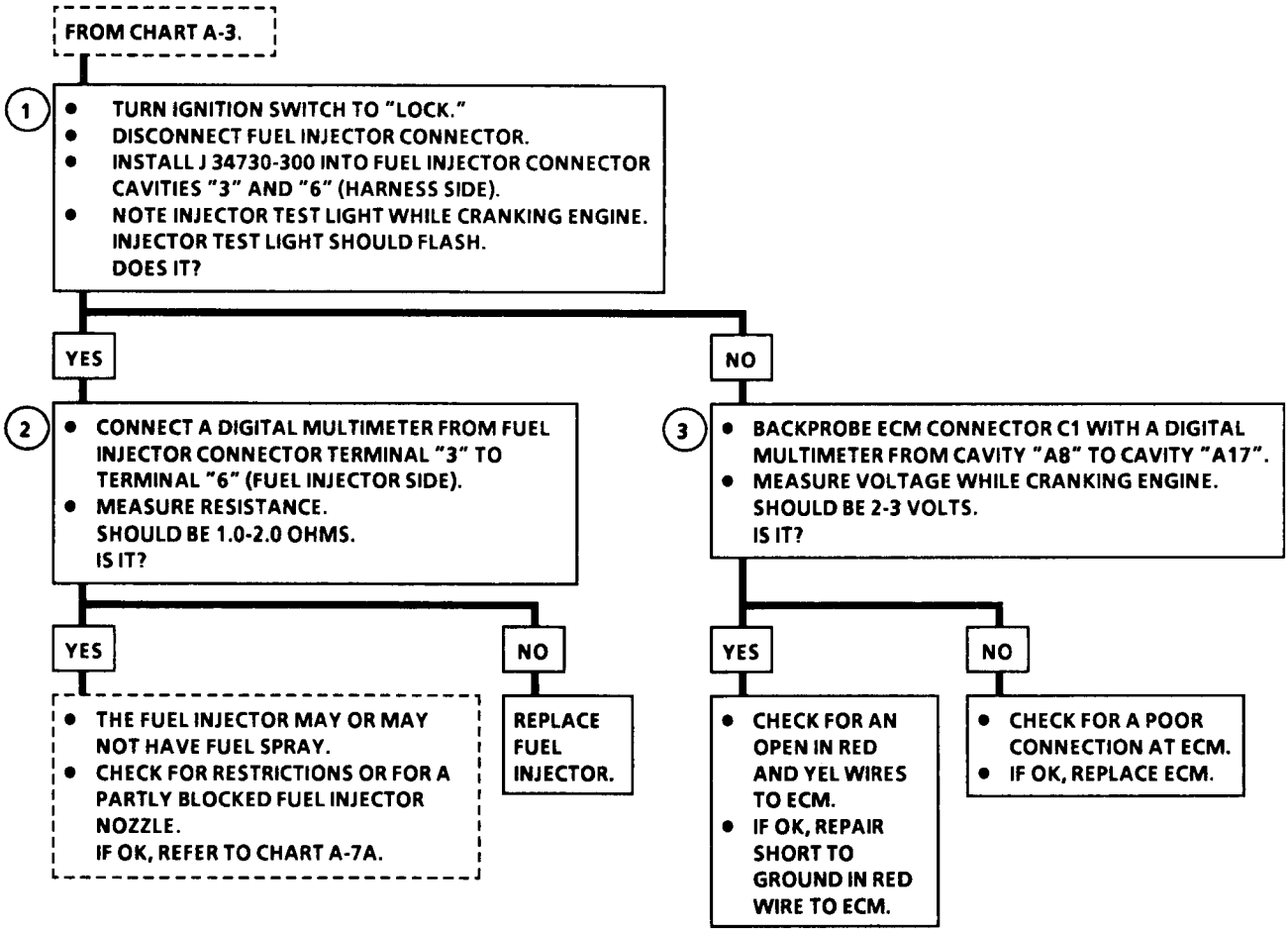

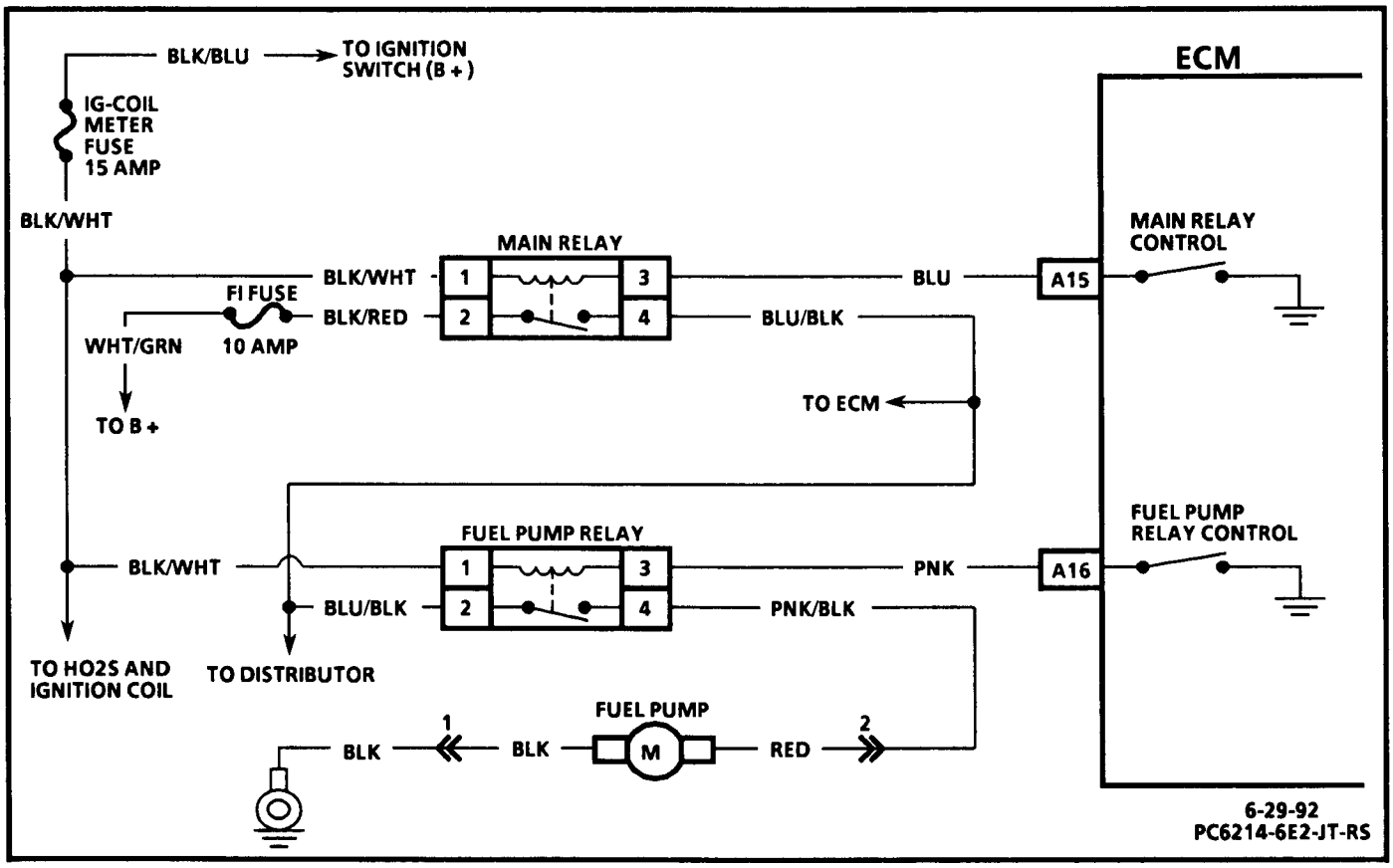

CHART A-7A

FUEL SYSTEM DIAGNOSIS
(FUEL PUMP RELAY CHECK)
1.6L (VIN U) "E/J" TRUCK

Circuit Description:

When the ignition switch is turned to the "ON" position, the engine control module (ECM) will energize the fuel pump relay for 3 seconds, allowing for fuel pump operation. When the fuel pump relay is de-engerized, the fuel pump stops operating. If the engine is being cranked, or is running, the fuel pump will continue to operate, as long as the ECM is receiving ignition reference pulses. If the ignition reference pulses are not detected, the fuel pump will stop after 3 seconds.

Test Description:

Number(s) below refer to circled number(s) on the diagnostic chart.

1. Checks fuel pump operation with ignition switch in the "ON" position.
2. Checks fuel pump relay switch for power.
3. Checks for faulty ECM or improper fuel pressure.
4. Checks fuel pump circuit.
5. Checks for an open PNK/BLK wire.
6. Checks fuel pump relay coil for power.
7. Checks for faulty fuel pump or an open BLK wire.
8. Checks for faulty fuel pump relay.
9. Checks for faulty ECM or an open PNK wire.

Diagnostic Aids:

Visual inspection of wiring and connectors should be made if an intermittent problem exists.

CHART A-7A

FUEL SYSTEM DIAGNOSIS (FUEL PUMP RELAY CHECK) 1.6L (VIN U) "E/J" TRUCK

IMPORTANT: MAKE SURE THAT DIAGNOSTIC CIRCUIT CHECK HAS BEEN PERFORMED BEFORE CONTINUING DIAGNOSIS.

FROM CHART A-5

1
- TURN IGNITION SWITCH TO "LOCK."
- REMOVE FUEL CAP.
- TURN IGNITION SWITCH TO "ON."
- LISTEN FOR FUEL PUMP TO RUN FOR APPROXIMATELY 3 SECONDS.
- DOES IT?

NO

2
- BACKPROBE FUEL PUMP RELAY CONNECTOR WITH A TEST LIGHT FROM CAVITY "2" TO GROUND.
- TEST LIGHT SHOULD LIGHT.
- DOES IT?

YES

4
- TURN IGNITION SWITCH TO "LOCK."
- REMOVE FUEL PUMP RELAY.
- CONNECT A JUMPER FROM FUEL PUMP RELAY CONNECTOR CAVITY "2" TO CAVITY "4".
- TURN IGNITION SWITCH TO "ON."
- FUEL PUMP SHOULD RUN.
- DOES IT?

NO

5
- LEAVE JUMPER CONNECTED.
- BACKPROBE FUEL PUMP CONNECTOR WITH A TEST LIGHT FROM CAVITY "2" TO GROUND.
- TEST LIGHT SHOULD LIGHT.
- DOES IT?

YES

7
- TURN IGNITION SWITCH TO "LOCK."
- DISCONNECT FUEL PUMP CONNECTOR.
- CONNECT A TEST LIGHT FROM FUEL PUMP CONNECTOR CAVITY "1" (HARNESS SIDE) TO B+.
- TEST LIGHT SHOULD LIGHT.
- DOES IT?

YES
- CHECK FOR POOR CONNECTION AT FUEL PUMP. IF OK, REPLACE FUEL PUMP.

NO
- REPAIR OPEN IN BLK WIRE.

NO
- CHECK FOR POOR CONNECTION AT FUEL PUMP RELAY. IF OK, REPAIR OPEN IN BLU/BLK WIRE.

3
- BACKPROBE FUEL PUMP RELAY CONNECTOR WITH A TEST LIGHT FROM CAVITY "B" TO B+.
- NOTE TEST LIGHT WHILE CRANKING ENGINE.
- TEST LIGHT SHOULD LIGHT.
- DOES IT?

NO
- REPLACE ECM.

YES
- REFER TO CHART A-7B.

YES

6
- TURN IGNITION SWITCH TO "LOCK."
- REMOVE JUMPER FROM FUEL PUMP RELAY CONNECTOR.
- TURN IGNITION SWITCH TO "ON."
- BACKPROBE FUEL PUMP RELAY CONNECTOR WITH A TEST LIGHT FROM CAVITY "1" TO GROUND.
- TEST LIGHT SHOULD LIGHT.
- DOES IT?

YES

8
- CONNECT A TEST LIGHT FROM FUEL PUMP RELAY CONNECTOR CAVITY "3" TO B+.
- NOTE TEST LIGHT WHILE CRANKING ENGINE.
- TEST LIGHT SHOULD LIGHT.
- DOES IT?

NO
- CHECK FOR POOR CONNECTION AT FUEL PUMP RELAY. IF OK, REPAIR OPEN IN BLK/WHT WIRE.

NO

9
- BACKPROBE ECM CONNECTOR C1 WITH A TEST LIGHT FROM CAVITY "A16" TO B+.
- NOTE TEST LIGHT WHILE CRANKING ENGINE.
- TEST LIGHT SHOULD LIGHT.
- DOES IT?

YES
- CHECK FOR POOR CONNECTION AT FUEL PUMP RELAY. IF OK, REPLACE FUEL PUMP RELAY.

NO
- CHECK FOR POOR CONNECTION AT ECM. IF OK, REPLACE ECM.

YES
- REPAIR OPEN IN PNK WIRE.

7-7-92
PC6215-6E2-JT-RS

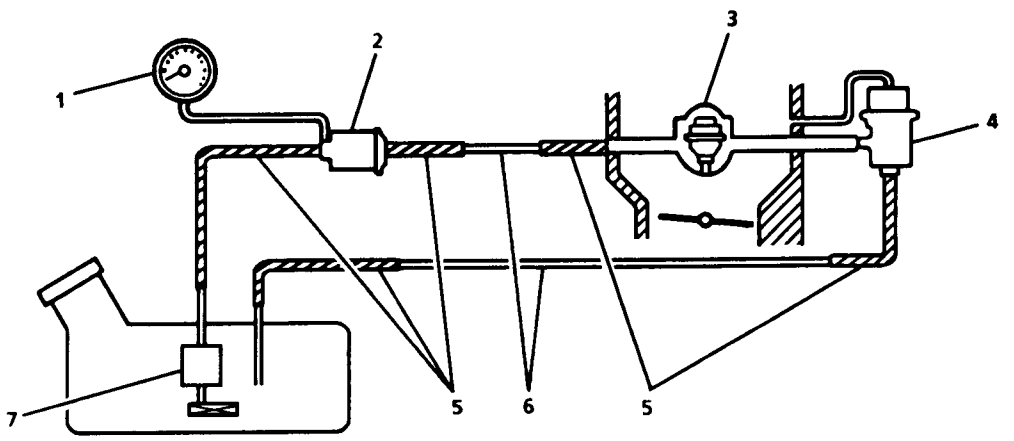

1 J 34730-1 FUEL PRESSURE GAGE
2 FUEL FILTER
3 FUEL INJECTOR
4 FUEL PRESSURE REGULATOR
5 FLEXIBLE HOSE
6 FUEL PIPES
7 FUEL PUMP

IS 0299

CHART A-7B

(Page 1 of 2)

FUEL SYSTEM DIAGNOSIS
(FUEL PRESSURE CHECK)
1.6L (VIN U) "E/J" TRUCK

Circuit Description:

When the ignition switch is turned to the "ON" position, the engine control module (ECM) will energize the fuel pump relay for 3 seconds, allowing for fuel pump operation. If the engine is being cranked, or is running, the fuel pump will continue to operate, as long as the ECM is receiving ignition references pulses. If the ignition reference pulses are not detected, the fuel pump will stop after 3 seconds.

The fuel pump will deliver fuel through the fuel filter to the fuel injector and fuel pressure regulator, where the system pressure is controlled at 240-280 kPa (34-41 psi). Excess fuel is returned to the fuel tank by means of a fuel return pipe.

Test Description:

Number(s) below refer to circled number(s) on the diagnostic chart.

1. Checks to see if fuel system pressure is within specifications.
2. Checks fuel feed pipe and hose for leaks.
3. Checks for faulty fuel pump or faulty pressure regulator.
4. Checks for a leaky fuel injector or throttle body or a faulty fuel pressure regulator.

Diagnostic Aids

Improper fuel system pressure can result in one of the following conditions:

- Cranks, but will not run.
- Cuts out, may feel like ignition problem.
- Poor fuel economy, loss of power.
- Hard starts.

CHART A-7B

(Page 1 of 2)

FUEL SYSTEM DIAGNOSIS (FUEL PRESSURE CHECK) 1.6L (VIN U) "E/J" TRUCK

IMPORTANT: MAKE SURE THAT DIAGNOSTIC CIRCUIT CHECK HAS BEEN PERFORMED AND THAT FUEL QUANTITY IS OK BEFORE CONTINUING DIAGNOSIS.

FROM CHART A-7A

1

- TURN IGNITION SWITCH TO "LOCK."
- INSTALL A J 34730-1.
  REFER TO CHART A-7C FOR INSTALLATION PROCEDURES.
- TURN IGNITION SWITCH TO "ON."
  FUEL PUMP WILL RUN FOR APPROXIMATELY 3 SECONDS.
- NOTE FUEL PRESSURE.
  PRESSURE SHOULD BE 240-280 kPa (34-41 psi) WITH FUEL PUMP RUNNING, AND SHOULD REMAIN ABOVE 172 kPa (25 psi) OR HIGHER FOR 1 MINUTE AFTER FUEL PUMP STOPS.
  IS IT?

YES

FUEL PRESSURE IS NORMAL. IF PROBLEM IS STILL "ENGINE CRANKS BUT WILL NOT RUN," REFER TO SECTION 6E2-B.

NO

FUEL PRESSURE IS BETWEEN 240-280 kPa (34-41 psi) BUT DROPS BELOW 172 kPa (25 psi) WITHIN 1 MINUTE.

FUEL PRESSURE IS BELOW 240 kPa (34 psi) OR IS ABOVE 280 kPa (41 psi).

REFER TO CHART A-7B (PAGE 2 OF 2).

NO PRESSURE AT ALL.

- CHECK FOR RESTRICTED FUEL FEED PIPE OR HOSE.
  IF OK, REPLACE FUEL PUMP.

2

- CHECK FUEL FEED PIPE AND HOSE CONNECTION FOR LEAKS.

LEAKS

REPAIR LEAKAGE AS NECESSARY.

NO LEAKS

3

- TURN IGNITION SWITCH TO "LOCK."
- TURN IGNITION SWITCH TO "ON."
  FUEL PUMP WILL RUN FOR APPROXIMATELY 3 SECONDS.
- CHECK FUEL PRESSURE WHILE BLOCKING (PINCHING) FUEL FEED HOSE BEFORE PRESSURE GAGE.
  PRESSURE SHOULD REMAIN AT OR ABOVE 172 kPa (25 psi).
  DOES IT?

YES

- CHECK FOR LEAKAGE AT FUEL PUMP HOSE TO FUEL PUMP PIPE CONNECTIONS.
  IF OK, REPLACE FUEL PUMP

NO

4

- TURN IGNITION SWITCH TO "LOCK."
- TURN IGNITION SWITCH TO "ON."
  FUEL PUMP WILL RUN FOR APPROXIMATELY 3 SECONDS.
- CHECK FUEL PRESSURE WHILE BLOCKING (PINCHING) FUEL RETURN HOSE.
  PRESSURE SHOULD REMAIN AT OR ABOVE 172 kPa (25 PSI).
  DOES IT?

YES

REPLACE FUEL PRESSURE REGULATOR.

NO

- CHECK FOR LEAKAGE AT FUEL INJECTOR OR BETWEEN FUEL INJECTOR AND THROTTLE BODY.
  IF OK, REPLACE FUEL PUMP.

7-1-92
PC6216-6E2-JT-RS

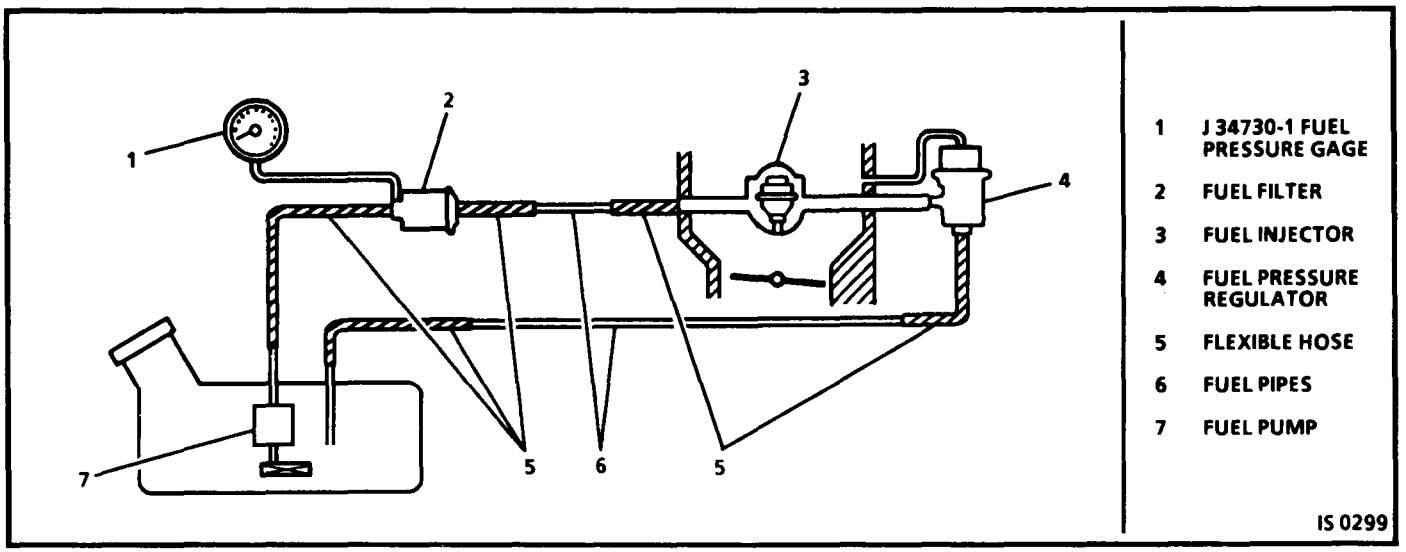

CHART A-7B

(Page 2 of 2)

FUEL SYSTEM DIAGNOSIS
(FUEL PRESSURE CHECK)
1.6L (VIN U) "E/J" TRUCK

Circuit Description:

When the ignition switch is turned to the "ON" position, the engine control module (ECM) will energize the fuel pump relay for 3 seconds, allowing for fuel pump operation. If the engine is being cranked, or is running, the fuel pump will continue to operate, as long as the ECM is receiving ignition reference pulses. If the ignition reference pulses are not detected, the fuel pump will stop after 3 seconds.

The fuel pump will deliver fuel through the fuel filter to the fuel injector and fuel pressure regulator, where the system pressure is controlled at 240-280 kPa (34-41 psi). Excess fuel is returned to the fuel tank by means of a fuel return pipe.

Test Description: Number(s) below refer to circled number(s) on the diagnostic chart.

5. Checks for leaks at the fuel pump hose connections, for a faulty fuel pump or a faulty fuel pressure regulator.
6. Checks for restricted fuel feed pipe, faulty fuel filter or restricted return fuel pipe.

CHART A-7B

(Page 2 of 2)

FUEL SYSTEM DIAGNOSIS (FUEL PRESSURE CHECK) 1.6L (VIN U) "E/J" TRUCK

FROM CHART A-7B (Page 1 of 2)
FUEL PRESSURE IS BELOW 240 kPa (34 psi) OR IS ABOVE 280 kPa (41 psi).

FUEL PRESSURE IS BELOW 240 kPa (34 psi).

(5)
- TURN IGNITION SWITCH TO "LOCK."
- TURN IGNITION SWITCH TO "ON."
  CHECK FUEL PRESSURE WHILE BLOCKING (PINCHING) FUEL RETURN HOSE.
  PRESSURE SHOULD BE 400 kPa (58 psi) OR HIGHER.
  IS IT?

NO
- CHECK FOR LEAKS AT HOSE CONNECTION TO FUEL PUMP IN FUEL TANK.
  IF OK, REPLACE FUEL PUMP.

YES
REPLACE FUEL PRESSURE REGULATOR,

FUEL PRESSURE IS ABOVE 280 kPa (41 psi).

(6)
- TURN IGNITION SWITCH TO "LOCK."
- RELIEVE FUEL SYSTEM PRESSURE. REFER TO "FUEL PRESSURE GAGE REMOVAL" IN CHART A-7C AND PERFORM STEPS 1 THROUGH 3 ONLY.
- DISCONNECT FUEL RETURN HOSE FROM FUEL PRESSURE REGULATOR.
- CONNECT A NEW RETURN HOSE TO FUEL PRESSURE REGULATOR.
- INSERT THE OTHER END OF THE NEW HOSE INTO AN APPROVED GASOLINE CONTAINER.
- REINSTALL FUEL PUMP RELAY.
- TURN IGNITION SWITCH TO "ON."
  PRESSURE SHOULD BE 240-280 kPa (34-41 psi).
  IS IT?

NO
- CHECK FOR RESTRICTED FUEL FEED PIPE OR HOSE.
  IF OK, REPLACE FUEL FILTER.

YES
- REPLACE HOSES AS NECESSARY.
- CHECK FOR IMPROPER HOSE ROUTING.

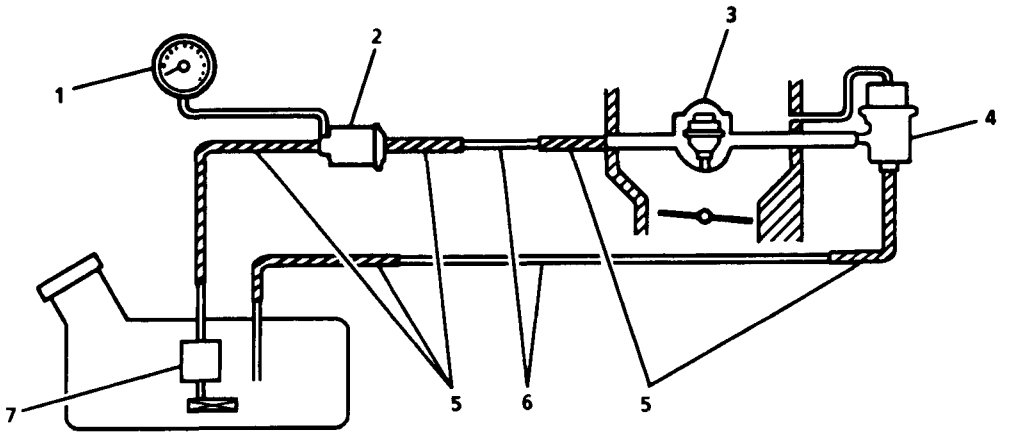

1 J 34730-1 FUEL PRESSURE GAGE
2 FUEL FILTER
3 FUEL INJECTOR
4 FUEL PRESSURE REGULATOR
5 FLEXIBLE HOSE
6 FUEL PIPES
7 FUEL PUMP

IS 0299

CHART A-7C

(Page 1 of 2)

FUEL SYSTEM DIAGNOSIS
(FUEL PRESSURE GAGE)
1.6L (VIN U) "E/J" TRUCK

Circuit Description:

The following procedure outlines the installation and removal of the fuel pressure gage. Make sure to observe all cautions while performing this procedure.

CHART A-7C

FUEL SYSTEM DIAGNOSIS (FUEL PRESSURE GAGE) 1.6L (VIN U) "E/J" TRUCK

Tools Required: J 34730-1 Fuel Pressure Gage
J 37746 Fuel Pressure Gage Adapter

CAUTION:
- **To reduce the risk of fire and personal injury, it is necessary to relieve the fuel system pressure before servicing the fuel system.**
- **After relieving fuel system pressure, a small amount of fuel may be released when servicing fuel pipes, hoses or connections. To reduce the chance of personal injury and to catch any fuel that may leak out, cover fuel pipe fittings with a shop towel before disconnecting them. Place the shop towel in an approved container when disconnect is completed.**

FUEL PRESSURE GAGE INSTALLATION:

1. Loosen fuel filler cap to relieve fuel tank pressure.
2. Remove fuel pump relay.
3. Crank engine and allow to stall. Crank engine for an additional 3 seconds to assure relief of any remaining fuel pressure.
4. Disconnect negative (-) battery cable.
5. Raise vehicle.
6. Remove fuel filter inlet hose plug. Use a shop towel to catch any remaining fuel that may leak.
7. Install J 37746 Fuel Pressure Gage Adapter to fuel filter inlet union bolt.
8. Install J 34730-1 Fuel Pressure Gage to J 37746 Fuel Pressure Gage Adapter.
9. Lower vehicle.
10. Reconnect negative (-) battery cable. Tighten to 15 N·m (11 lb. ft.).
11. Install fuel pump relay and tighten fuel filler cap.

FUEL PRESSURE GAGE REMOVAL:

1. Loosen fuel filler cap to relieve fuel tank pressure.
2. Remove fuel pump relay.
3. Crank engine and allow to stall. Crank engine for an additional 3 seconds to assure relief of any remaining fuel pressure.
4. Remove negative (-) battery cable.
5. Raise vehicle.
6. Remove J 34730-1 Fuel Pressure Gage and J 37746 Fuel Pressure Gage Adapter from fuel filter. Use a shop towel to catch any remaining fuel that may leak.
7. Install fuel filter inlet hose plug.
8. Lower vehicle.
9. Reconnect negative (-) battery cable. Tighten to 15 N·m (11 lb. ft.).
10. Install fuel pump relay and tighten fuel filler cap.
11. Turn ignition switch to "ON" and then to "OFF." Check for any fuel leaks.

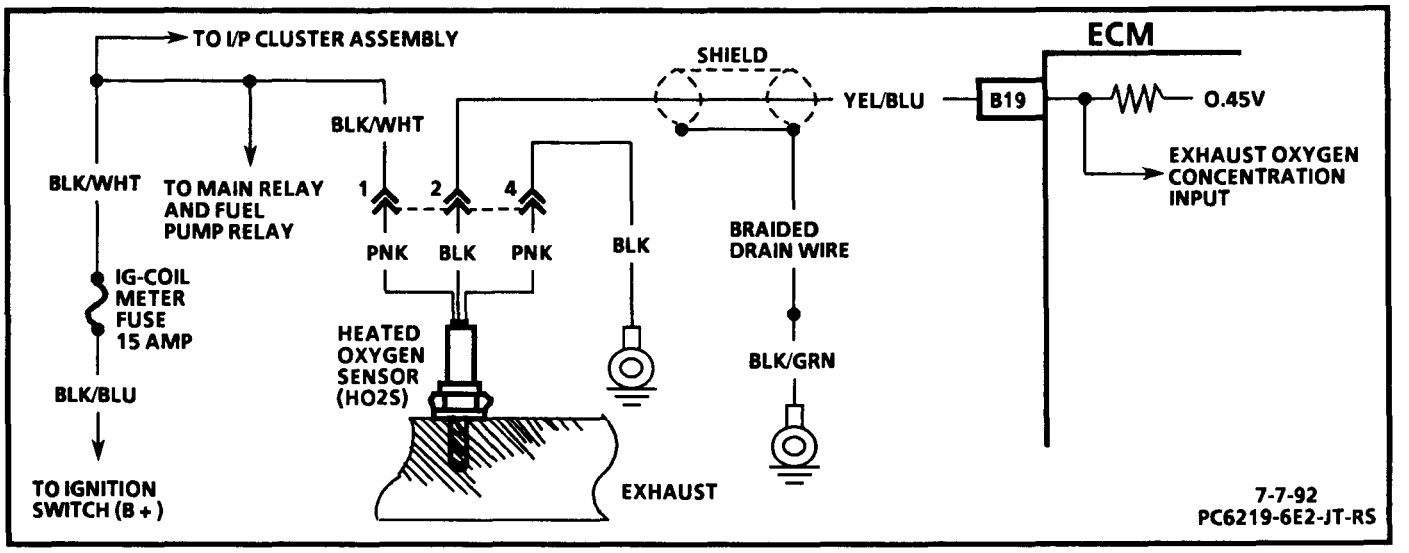

DTC 13

HEATED OXYGEN SENSOR (HO2S) CIRCUIT (OPEN CIRCUIT) 1.6L (VIN U) "E/J" TRUCK

Circuit Description:

The heated oxygen sensor (HO2S) produces a voltage that varies between .1V and .9V under normal operating conditions. The engine control module (ECM) monitors this voltage and determines if the exhaust is lean or rich. If the voltage input at the ECM is about .1V, the exhaust is lean, and if the voltage input is about .9V the exhaust is rich. The HO2S has a built-in heater that keeps the HO2S at operating temperature while the engine is running. If the HO2S is below 360°C (600°F) it is like an open circuit and will not produce a voltage. This will cause "Open Loop" operation.

DTC 13 will set if the following conditions are met for about 30 seconds.

- Engine operating temperature > 70°C (158°F).
- Engine running for a least 2 minutes.
- Engine rpm ≥260 rpm.
- MAP >350 mm Hg.
- HO2S temperature below 360°C (600°F).

Test Description:

Number(s) below refer to circled number(s) on the diagnostic chart.

1. This checks for a short to voltage in YEL/BLU wire or for a faulty ECM.
2. This checks for a short to ground in YEL/BLU wire, a faulty ECM or for a faulty HO2S.

Diagnostic Aids:

Normal voltage on the HO2S input wire varies between 100 mV and 999 mV (.1 and .9 volt), while in "Closed Loop." Refer to SECTION 6E2-C1 for additional HO2S specifications.

DTC 13

HEATED OXYGEN SENSOR (HO2S) CIRCUIT (OPEN CIRCUIT) 1.6L (VIN U) "E/J" TRUCK

IMPORTANT: MAKE SURE THAT DIAGNOSTIC CIRCUIT CHECK HAS BEEN PERFORMED BEFORE CONTINUING DIAGNOSIS.

FROM DIAGNOSTIC CIRCUIT CHECK.

1. • START AND RUN ENGINE FOR 1 MINUTE. NOTE TECH 1 HO2S VOLTAGE.

LESS THAN 300 mV

2. • TURN IGNITION SWITCH TO "LOCK."
• DISCONNECT HO2S CONNECTOR.
• CONNECT A DIGITAL MULTIMETER FROM HO2S CONNECTOR CAVITY "2" TO GROUND (HO2S SIDE).
• MEASURE VOLTAGE WITH ENGINE RUNNING ABOVE 1200 RPM.
SHOULD VARY BETWEEN 100 mV and 900 mV (.1V-.9V).
DOES IT?

YES

• CHECK FOR OPEN OR SHORT TO GROUND IN YEL/BLU WIRE.
IF OK, REPLACE ECM.

NO

REPLACE HO2S.

MORE THAN 600 mV

• CHECK FOR A SHORT TO VOLTAGE IN YEL/BLU WIRE.
IF OK, REPLACE ECM..

"AFTER REPAIRS," CONFIRM "CLOSED LOOP" OPERATION, NO DTCs AND NO MALFUNCTION INDICATOR LAMP (MIL).

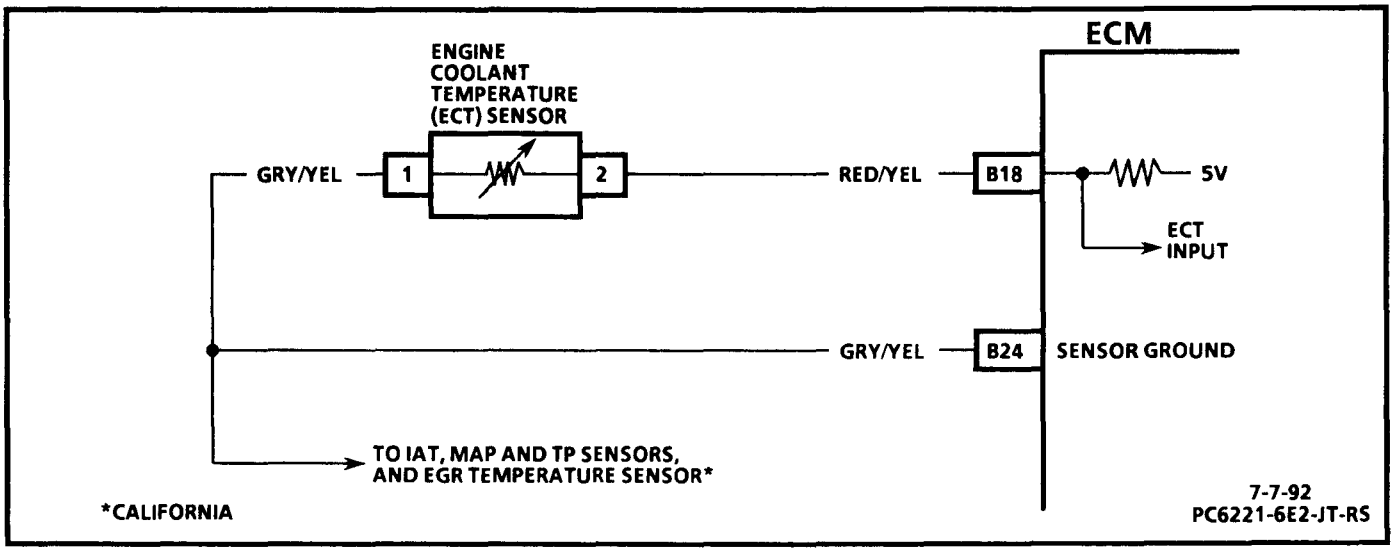

DTC 14

ENGINE COOLANT TEMPERATURE (ECT) SENSOR CIRCUIT (HIGH VOLTAGE INPUT) 1.6L (VIN U) "E/J" TRUCK

Circuit Description:

The engine coolant temperature (ECT) sensor is a thermistor (a variable resistor that changes along with engine coolant temperature [ECT]) in series with a fixed resistor in the engine control module (ECM). The ECM applies 5 volts to the ECT sensor. The ECM monitors the voltage across the ECT sensor and converts it into a temperature reading. When the engine is cold the ECT sensor resistance is high, and when the engine is warm the ECT sensor resistance is low. Therefore, when the engine is cold the ECM will receive a high voltage input, and when the engine is warm the ECM will receive a low voltage input.

DTC 14 will set if the following condition is met for at least 5 seconds:

- Voltage input at the ECM indicates ECT below -48°C (-54°F).

Test Description:

Number(s) below refer to circled number(s) on the diagnostic chart.

1. This test simulates DTC 15. If the ECM stores DTC 15, the ECM and its wiring are OK and the ECT sensor is faulty. If DTC 14 resets, the ECT sensor is OK and the wiring to the ECM or the ECM is faulty.
2. This test determines whether there is an open the in RED/YEL or GRY/YEL wires, a short to B+ in the RED/YEL wire or a faulty ECM.

Diagnostic Aids:

After the engine is started the ECT should rise steadily to about 95°C (203°F) and stabilize when the thermostat opens.

DTCs 14 and 21 stored at the same time could be the result of an open GRY/YEL wire.

When replacing the ECT sensor the "Temperature to Resistance Value" scale on the diagnostic chart may be used to test the ECT sensor at various temperature levels to evaluate the possibility of a "shifted" (mis-scaled) sensor. A "shifted" sensor could result in poor driveability complaints. Refer to SECTION 6E2-C1 for additional ECT sensor specifications.

DTC 14

ENGINE COOLANT TEMPERATURE (ECT) SENSOR CIRCUIT (HIGH VOLTAGE INPUT) 1.6L (VIN U) "E/J" TRUCK

IMPORTANT: MAKE SURE THAT DIAGNOSTIC CIRCUIT CHECK HAS BEEN PERFORMED BEFORE CONTINUING DIAGNOSIS.

FROM DIAGNOSTIC CIRCUIT CHECK.

1
- TURN IGNITION SWITCH TO "LOCK."
- CLEAR DTCs.
- DISCONNECT ECT SENSOR CONNECTOR.
- CONNECT A JUMPER FROM CONNECTOR CAVITY "1" TO CAVITY "2" (HARNESS SIDE).
- START AND RUN ENGINE FOR 1 MINUTE.
  DOES TECH 1 INDICATE DTC 14 OR DTC 15?

DTC 14

2
- TURN IGNITION SWITCH TO "LOCK."
- REMOVE JUMPER FROM ECT SENSOR CONNECTOR.
- CONNECT A DIGITAL MULTIMETER FROM CONNECTOR CAVITY "2" TO GROUND.
- TURN IGNITION SWITCH TO "ON."
- MEASURE VOLTAGE.

4-6 VOLTS
- CHECK FOR AN OPEN IN GRY/YEL WIRE.
- CHECK FOR A POOR CONNECTION AT ECM.
  IF OK, REPLACE ECM.

0 VOLTS
- CHECK FOR AN OPEN IN RED/YEL WIRE.
- CHECK FOR POOR CONNECTION AT ECM.
  IF OK, REPLACE ECM.

MORE THAN 6 VOLTS.
- CHECK FOR A SHORT TO B+ IN RED/YEL WIRE.
  IF OK, REPLACE ECM.

DTC 15
- CHECK FOR POOR CONNECTION AT ECT SENSOR.
  IF OK, REPLACE ECT SENSOR.

DIAGNOSTIC AID

ECT SENSOR		
TEMPERATURE TO RESISTANCE VALUES (APPROXIMATE)		
°F	°C	OHMS
210	99	190
160	71	400
100	38	1,250
70	21	2,350
40	4	4,780
20	-7	8,100
0	-18	14,650

"AFTER REPAIRS," CONFIRM "CLOSED LOOP" OPERATION, NO DTCs AND NO MALFUNCTION INDICATOR LAMP (MIL).

7-1-92
PC6222-6E2-JT-RS

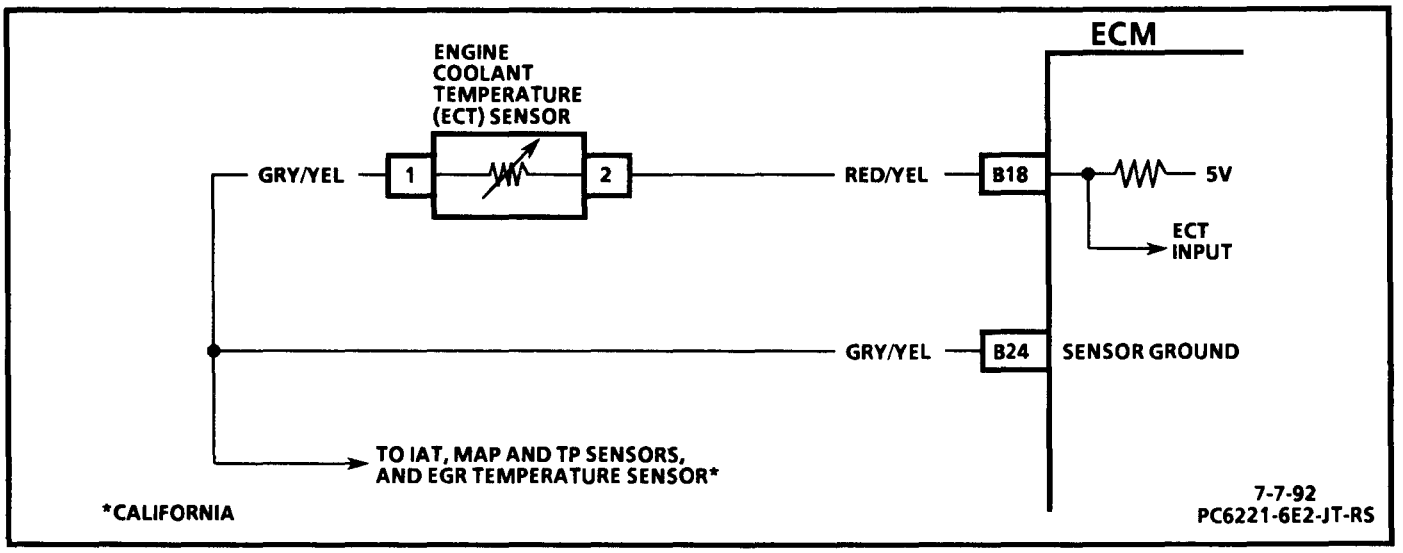

DTC 15

ENGINE COOLANT TEMPERATURE (ECT) SENSOR CIRCUIT (LOW VOLTAGE INPUT) 1.6L (VIN U) "E/J" TRUCK

Circuit Description:

The engine coolant temperature (ECT) sensor is a thermistor (a variable resistor that changes along with engine coolant temperature [ECT]) in series with a fixed resistor in the engine control module (ECM). The ECM applies 5 volts to the ECT sensor. The ECM monitors the voltage across the ECT sensor and converts it into a temperature reading. When the engine is cold the ECT sensor resistance is high, and when the engine is warm the ECT sensor resistance is low. Therefore, when the engine is cold the ECM will receive a high voltage input, and when the engine is warm the ECM will receive a low voltage input.

DTC 15 will set if the following condition is met for at least 5 seconds:

- Voltage input at the ECM indicates ECT above 140°C (284°F).

Test Description:

Number(s) below refer to circled number(s) on the diagnostic chart.

1. This test simulates DTC 14. If the ECM stores DTC 14, the ECM and its wiring are OK and the ECT sensor is faulty. If DTC 15 resets, the ECT sensor is OK and the wiring to the ECM or the ECM is faulty.

Diagnostic Aids:

After the engine is started, the ECT should rise steadily to about 95°C (203°F) and stabilize when the thermostat opens.

Verify that engine is not overheating and has not been subjected to conditions which could create an overheating condition (i.e., overload, trailer towing, hilly terrain, heavy stop and go traffic, etc.).

When replacing the ECT sensor the "Temperature To Resistance Value" scale on the diagnostic chart may be used to test the ECT sensor at various temperature levels to evaluate the possibility of a "shifted" (mis-scaled) sensor. A "shifted" sensor could result in poor driveability complaints. Refer to SECTION 6E2-C1 for additional ECT sensor specifications.

DTC 15

ENGINE COOLANT TEMPERATURE (ECT) SENSOR CIRCUIT (LOW VOLTAGE INPUT) 1.6L (VIN U) "E/J" TRUCK

IMPORTANT: MAKE SURE THAT DIAGNOSTIC CIRCUIT CHECK HAS BEEN PERFORMED BEFORE CONTINUING DIAGNOSIS.

FROM DIAGNOSTIC CIRCUIT CHECK.

1
- TURN IGNITION SWITCH TO "LOCK."
- CLEAR DTCs.
- DISCONNECT ECT SENSOR CONNECTOR.
- START AND RUN ENGINE FOR 1 MINUTE. DOES TECH 1 INDICATE DTC 14 OR DTC 15?

DTC 14
- REPLACE ECT SENSOR.

DTC 15
- CHECK FOR SHORT TO GROUND IN RED/YEL WIRE. IF OK, REPLACE ECM.

DIAGNOSTIC AID

ECT SENSOR TEMPERATURE TO RESISTANCE VALUES (APPROXIMATE)		
°F	°C	OHMS
210	99	190
160	71	400
100	38	1,250
70	21	2,350
40	4	4,780
20	-7	8,100
0	-18	14,650

"AFTER REPAIRS," CONFIRM "CLOSED LOOP" OPERATION, NO DTCs AND NO MALFUNCTION INDICATOR LAMP (MIL).

7-2-92
PC6223-6E2-JT-RS

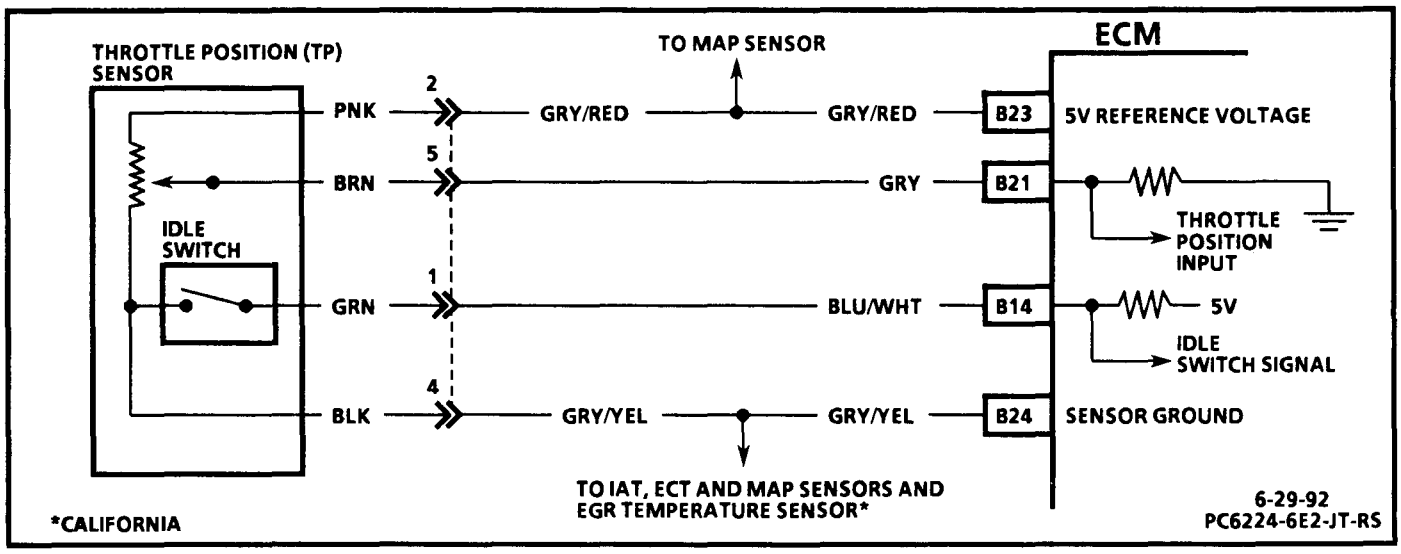

DTC 21

THROTTLE POSITION (TP) SENSOR CIRCUIT (HIGH VOLTAGE INPUT) 1.6L (VIN U) "E/J" TRUCK

Circuit Description:

The throttle position (TP) sensor has a potentiometer whose resistance changes along with the throttle valve position. The engine control module (ECM) provides a 5 volt reference voltage to the TP sensor. The ECM reads the voltage across the TP sensor and converts it into throttle position. When the TP sensor resistance decreases, the throttle valve opening is increasing to wide open throttle and the voltage being monitored at the ECM increases. When the TP sensor resistance increases, the throttle valve opening is decreasing to idle and the voltage being monitored at the ECM decreases.

DTC 21 will set if the following condition is met for at least 5 seconds:

- High voltage input at the ECM indicated with the engine running at idle.

Test Description:

Number(s) below refer to circled number(s) on the diagnostic chart.

1. With the TP sensor disconnected, the voltage input at the ECM should go low if the ECM and its wiring are OK. If the voltage input remains high, there is a short to voltage in the GRY wire or a faulty ECM.

Diagnostic Aids:

- A misadjusted TP sensor could cause DTC 21 or DTC 22. Refer to SECTION 6E2-C1 for TP sensor specifications.

DTC 21

THROTTLE POSITION (TP) SENSOR CIRCUIT (HIGH VOLTAGE INPUT) 1.6L (VIN U) "E/J" TRUCK

IMPORTANT: MAKE SURE THAT DIAGNOSTIC CIRCUIT CHECK HAS BEEN PERFORMED BEFORE CONTINUING DIAGNOSIS.

FROM DIAGNOSTIC CIRCUIT CHECK.

1
- TURN IGNITION SWITCH TO "LOCK."
- DISCONNECT TP SENSOR CONNECTOR.
- TURN IGNITION SWITCH TO "ON."
- NOTE TECH 1 THROTTLE POSITION SENSOR VOLTAGE.

0 VOLTS

- CHECK FOR AN OPEN IN GRY/YEL WIRE.
- IF OK, ADJUST /REPLACE TP SENSOR.

5.10 VOLTS

- CHECK FOR SHORT TO VOLTAGE IN GRY WIRE. IF OK, REPLACE ECM.

"AFTER REPAIRS," CONFIRM "CLOSED LOOP" OPERATION, NO DTCs AND NO MALFUNCTION INDICATOR LAMP (MIL).

6-29-92
PC6225-6E2-JT-RS

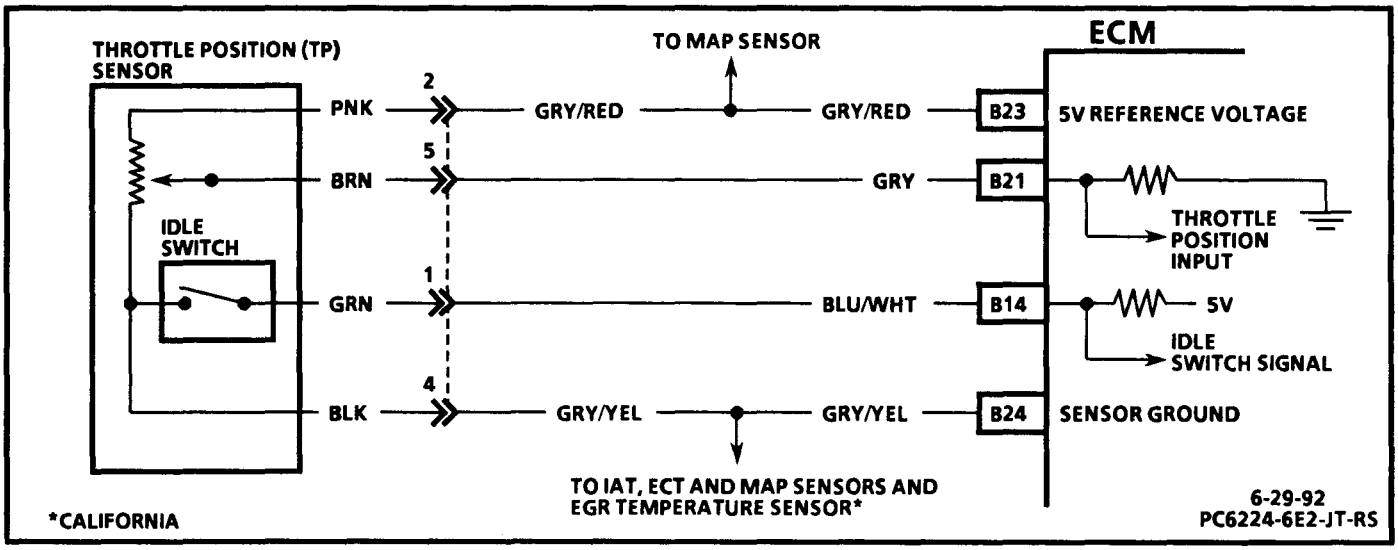

DTC 22

THROTTLE POSITION (TP) SENSOR CIRCUIT (HIGH VOLTAGE INPUT) 1.6L (VIN U) "E/J" TRUCK

Circuit Description:

The throttle position (TP) sensor has a potentiometer whose resistance changes along with the throttle valve position. The engine control module (ECM) provides a 5 volt reference voltage to the TP sensor. The ECM reads the voltage across the TP sensor and converts it into throttle position. When the TP sensor resistance decreases, the throttle valve opening is increasing to wide open throttle and the voltage being monitored at the ECM increases. When the TP sensor resistance increases, the throttle valve opening is decreasing to idle and the voltage being monitored at the ECM decreases.

DTC 22 will set if the following condition is met for at least 5 seconds:

- Low voltage input at the ECM indicated with the engine running at idle.

Test Description:

Number(s) below refer to circled number(s) on the diagnostic chart.

1. By connecting a jumper between the TP sensor cavities, the voltage input at the ECM should be high, indicating that the TP sensor is faulty. If the voltage input is low, the problem is in the ECM or its wiring.
2. This checks for a open or short to ground in the GRY and GRY/RED wires, and for a faulty ECM.

Diagnostic Aids:

A misadjusted TP sensor could cause DTC 21 or DTC 22 to set. Refer to SECTION 6E2-C1 for TP sensor specifications.

DTC 22 and DTC 32 stored at the same time could be the result of an open GRY/RED wire.

DTC 22

THROTTLE POSITION (TP) SENSOR CIRCUIT (LOW VOLTAGE INPUT) 1.6L (VIN U) "E/J" TRUCK

IMPORTANT: MAKE SURE THAT DIAGNOSTIC CIRCUIT CHECK HAS BEEN PERFORMED BEFORE CONTINUING DIAGNOSIS.

FROM DIAGNOSTIC CIRCUIT CHECK.

1
- TURN IGNITION SWITCH TO "LOCK."
- DISCONNECT TP SENSOR CONNECTOR.
- CONNECT A JUMPER FROM TP SENSOR CONNECTOR CAVITY "2" TO CAVITY "5" (HARNESS SIDE).
- TURN IGNITION SWITCH TO "ON."
- NOTE TECH 1 THROT POSITION VOLTAGE.

0 VOLTS

2
- REMOVE JUMPER FROM TP SENSOR CONNECTOR.
- CONNECT A DIGITAL MULTIMETER FROM CONNECTOR CAVITY "5" TO GROUND (HARNESS SIDE).
- MEASURE VOLTAGE.

4-5 VOLTS

- CHECK FOR A SHORT TO GROUND IN GRY WIRE.
- IF OK, REPLACE ECM.

0 VOLTS

- CHECK FOR AN OPEN OR A SHORT TO GROUND IN GRY/RED WIRE.
  IF OK, REPLACE ECM.

5.10 VOLTS

- ADJUST/REPLACE TP SENSOR.

"AFTER REPAIRS," CONFIRM "CLOSED LOOP" OPERATION, NO DTCs AND NO MALFUNCTION INDICATOR LAMP (MIL).

6-29-92
PC6226-6E2-JT-RS

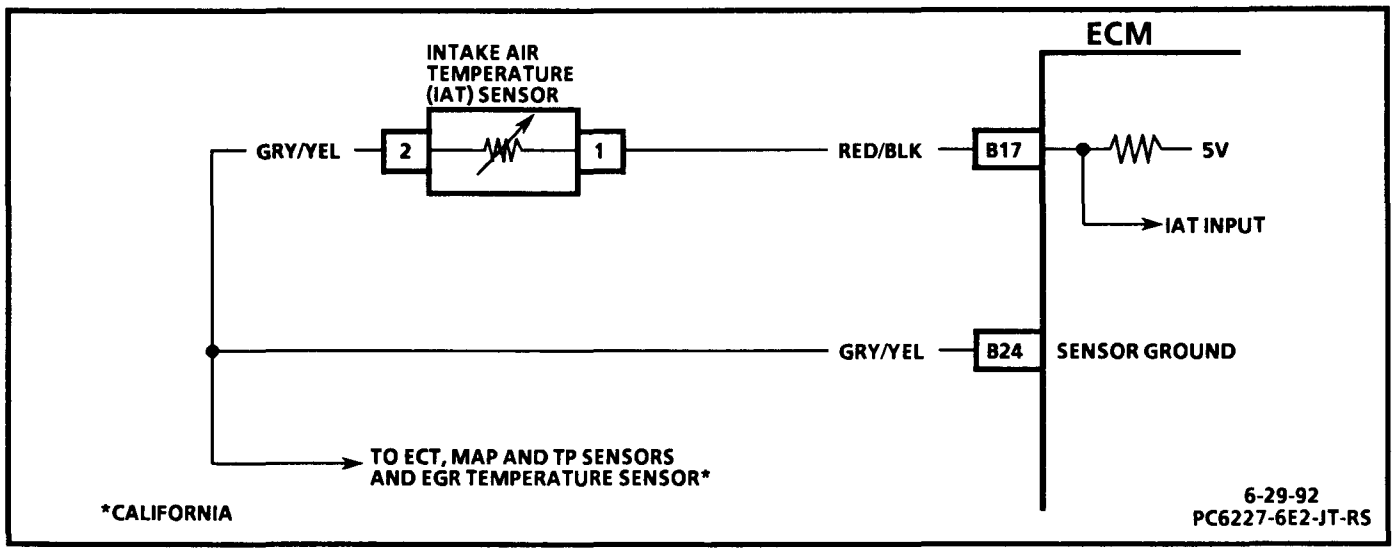

CODE 23

INTAKE AIR TEMPERATURE (IAT) SENSOR CIRCUIT (HIGH VOLTAGE INPUT) 1.6L (VIN U) "E/J" TRUCK

Circuit Description:

The intake air temperature (IAT) sensor is a thermistor (a variable resistor that changes along with outside air temperature) in series with a fixed resistor in the engine control module (ECM). The ECM applies 5 volts to the IAT sensor. The ECM monitors the voltage across the IAT sensor and converts it into a temperature reading. When the outside air temperature is cold the IAT sensor resistance is high, and when the outside air temperature is warm the IAT sensor resistance is low. Therefore, when the air temperature is cold the ECM will receive a high voltage input, and when the air temperature is warm the ECM will receive a low voltage input.

DTC 23 will set if the following condition is met for at least 5 seconds:

- Voltage input at the ECM indicates an air temperature below -47°C (52°F).

Test Description:

Number(s) below refer to circled number(s) on the diagnostic chart.

1. This test simulates DTC 25. If the ECM stores DTC 25, the ECM and its wiring are OK and the IAT sensor is faulty. If DTC 23 resets, the IAT sensor is OK, and the wiring to the ECM or the ECM is faulty.
2. This test determines whether there is an open in the RED/BLK or GRY/YEL wires, a short to B+ in the RED/BLK wire or a faulty ECM.

Diagnostic Aids:

DTC 23 and DTC 21 stored at the same time could be the result of an open GRY/YEL wire.

When replacing the IAT sensor the "Temperature to Resistance Value" scale on the diagnostic chart may be used to test the sensor at various temperature levels to evaluate the possibility of a "shifted" (mis-scaled) sensor. A "shifted" sensor could result in poor driveability complaints. Refer to SECTION 6E2-C1 for additional IAT sensor specifications.

DTC 23

INTAKE AIR TEMPERATURE (IAT) SENSOR CIRCUIT (HIGH VOLTAGE INPUT) 1.6L (VIN U) "E/J" TRUCK

IMPORTANT: MAKE SURE THAT DIAGNOSTIC CIRCUIT CHECK HAS BEEN PERFORMED BEFORE CONTINUING DIAGNOSIS.

FROM DIAGNOSTIC CIRCUIT CHECK.

1
- TURN IGNITION SWITCH TO "LOCK."
- CLEAR DTCs.
- DISCONNECT IAT SENSOR CONNECTOR.
- CONNECT A JUMPER FROM IAT SENSOR CONNECTOR CAVITY "1" TO CAVITY "2" (HARNESS SIDE).
- START AND RUN ENGINE FOR 1 MINUTE.

DOES TECH 1 DISPLAY INDICATE DTC 23 OR DTC 25?

DTC 23

2
- TURN IGNITION SWITCH TO "LOCK."
- REMOVE JUMPER FROM IAT SENSOR CONNECTOR.
- CONNECT A DIGITAL MULTIMETER FROM IAT SENSOR CONNECTOR CAVITY "1" TO GROUND.
- TURN IGNITION SWITCH TO "ON."
- MEASURE VOLTAGE.

DTC 25

- CHECK FOR POOR CONNECTION AT IAT SENSOR. IF OK, REPLACE IAT SENSOR.

4-6 VOLTS

- CHECK FOR AN OPEN IN GRY/YEL WIRE.
- CHECK FOR A POOR CONNECTION AT ECM. IF OK, REPLACE ECM.

0 VOLTS

- CHECK FOR AN OPEN IN RED/BLK WIRE.
- CHECK FOR POOR CONNECTION AT ECM. IF OK, REPLACE ECM.

MORE THAN 6 VOLTS.

- CHECK FOR A SHORT TO B+ IN RED/BLK WIRE. IF OK, REPLACE ECM.

DIAGNOSTIC AID

IAT SENSOR		
TEMPERATURE TO RESISTANCE VALUES (APPROXIMATE)		
°F	°C	OHMS
210	99	200
160	71	450
100	38	1,300
70	21	2,500
40	4	5,200
20	-7	8,250
0	-18	14,800

"*AFTER REPAIRS*," CONFIRM "CLOSED LOOP" OPERATION, NO DTCs AND NO MALFUNCTION INDICATOR LAMP (MIL).

6-29-92
PC6228-6E2-JT-RS

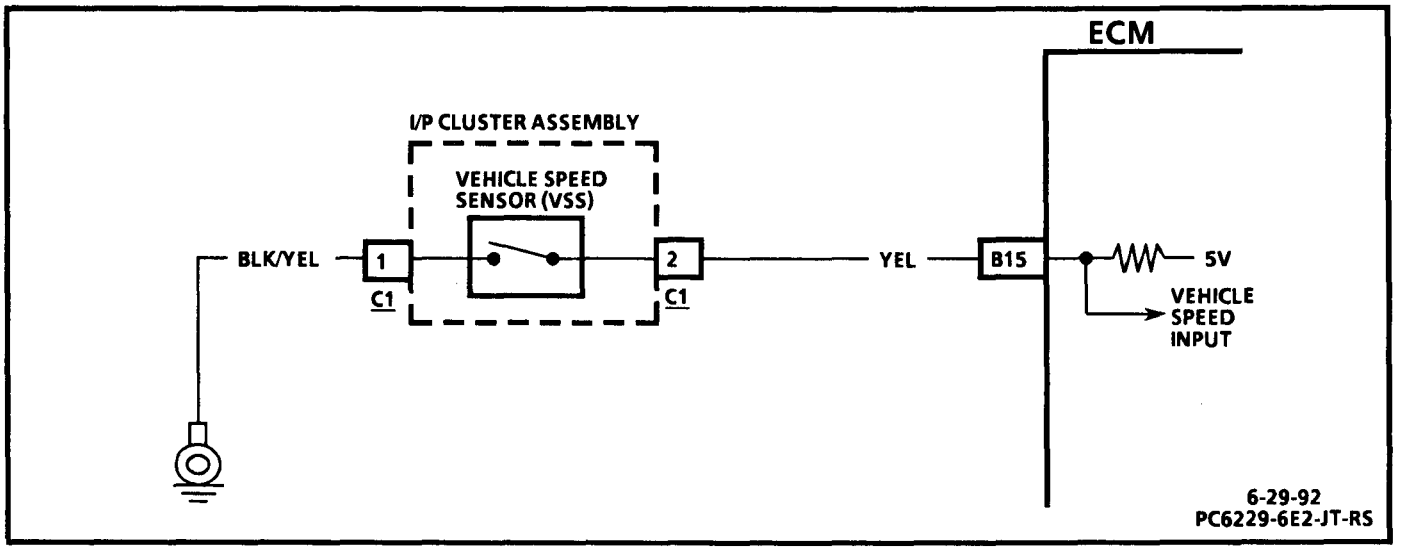

DTC 24

VEHICLE SPEED SENSOR (VSS) CIRCUIT 1.6L (VIN U) "E/J" TRUCK

Circuit Description:

The engine control module (ECM) supplies 5 volts to the vehicle speed sensor (VSS). While the vehicle is moving, the reed switch within the VSS will open and close four times per each revolution of the speedometer cable. Because the reed switch opens and closes, the voltage at the ECM is toggled high and low. The ECM then converts this toggled high/low voltage into a vehicle speed that is displayed in kph and mph.

DTC 24 will set if the following condition is met for at least 4 seconds:

- A constant voltage signal (either high or low) detected at the ECM with the engine running and the vehicle moving.

Test Description:

Number(s) below refer to circled number(s) on the diagnostic chart.

1. Checks to see if problem is intermittent.
2. If the VSS is not receiving the 5 volts from the ECM, DTC 24 will set. This step checks for an open or short to B+ in the YEL wire or for a faulty ECM.
3. This checks for a poor ground connection, and open in the BLK wire or for a faulty VSS.

Diagnostic Aids:

If the speedometer cable is binding, a false DTC 24 can be set. Make sure that the speedometer cable is free from any restrictions and that it has a secure connection to the I/P cluster assembly. Refer to "Intermittents" in SECTION 6E2-B.

DTC 24

VEHICLE SPEED SENSOR (VSS) CIRCUIT 1.6L (VIN U) "E/J" TRUCK

IMPORTANT: MAKE SURE THAT DIAGNOSTIC CIRCUIT CHECK HAS BEEN PERFORMED AND CHECK THE SPEEDOMETER CABLE OPERATION BEFORE CONTINUING DIAGNOSIS.

FROM DIAGNOSTIC CIRCUIT CHECK.

1
- RAISE AND SUITABLY SUPPORT VEHICLE DRIVE AXLES.
- START AND RUN ENGINE IN GEAR.
- TECH 1 SHOULD DISPLAY VEHICLE SPEED ABOVE 0 KPH/MPH. DOES IT?

NO → **2**

YES → PROBLEM IS INTERMITTENT. REFER TO "DIAGNOSTIC AIDS."

2
- TURN IGNITION SWITCH TO "LOCK."
- LOWER VEHICLE.
- DISCONNECT I/P CLUSTER ASSEMBLY CONNECTOR C1.
- CONNECT A DIGITAL MULTIMETER FROM CONNECTOR C1 TERMINAL "2" TO GROUND (HARNESS SIDE).
- TURN IGNITION SWITCH TO "ON."
- MEASURE VOLTAGE.

4-6 VOLTS → **3**

0 VOLTS →
- CHECK FOR AN OPEN OR SHORT TO GROUND IN YEL WIRE.
- CHECK FOR POOR CONNECTION TO ECM.
IF OK, REPLACE ECM.

MORE THAN 6 VOLTS. →
- CHECK FOR A SHORT TO B+ IN YEL WIRE.
IF OK, REPLACE ECM.

3
- CONNECT A TEST LIGHT FROM I/P CLUSTER ASSEMBLY CONNECTOR C1 TERMINAL "1" (HARNESS SIDE) TO B+. TEST LIGHT SHOULD LIGHT. DOES IT?

YES →
- CHECK I/P CLUSTER PRINTED CIRCUIT FOR CRACKS OR BAD CONNECTIONS.
IF OK, REPLACE SPEEDOMETER ASSEMBLY.

NO →
- CHECK FOR A CLEAN GROUND CONNECTION.
IF OK, REPAIR OPEN IN BLK WIRE.

"AFTER REPAIRS," CONFIRM "CLOSED LOOP" OPERATION, NO DTCs AND NO MALFUNCTION INDICATOR LAMP (MIL).

7-1-92
PC6230-6E2-JT-RS

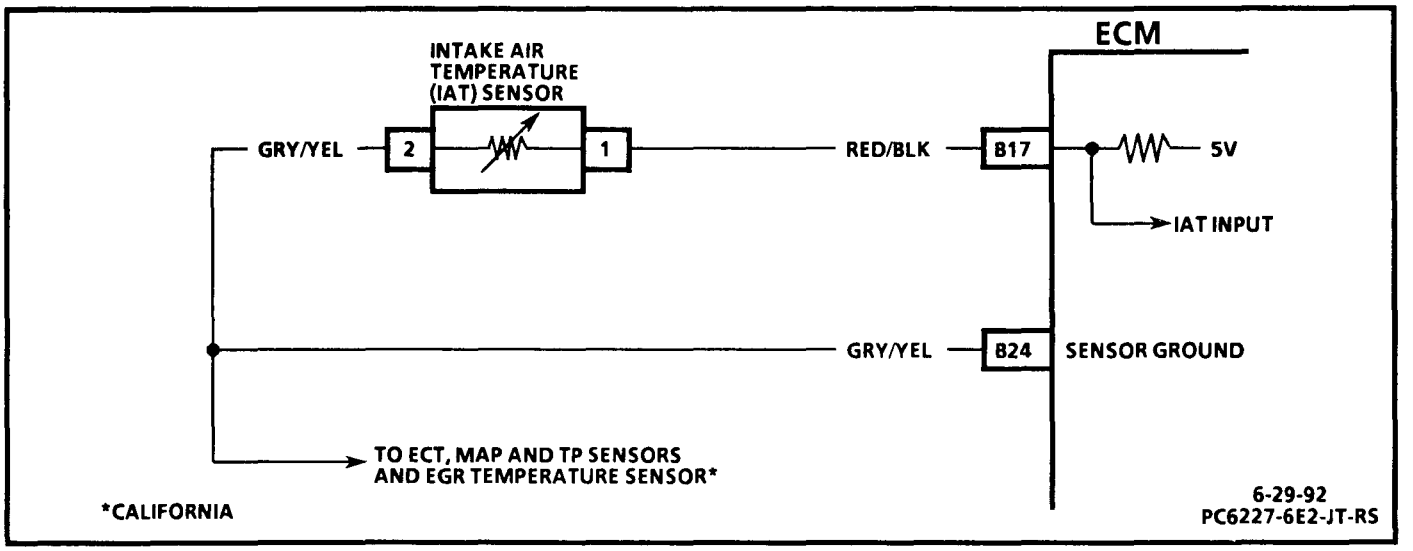

DTC 25

INTAKE AIR TEMPERATURE (IAT) SENSOR CIRCUIT (LOW VOLTAGE INPUT) 1.6L (VIN U) "E/J" TRUCK

Circuit Description:

The intake air temperature (IAT) sensor is a thermistor (a variable resistor that changes along with outside air temperature) in series with a fixed resistor in the engine control module (ECM). The ECM applies 5 volts to the IAT sensor. The ECM monitors the voltage across the IAT sensor and converts it into a temperature reading. When the outside air temperature is cold the IAT sensor resistance is high, and when the outside air temperature is warm the IAT sensor resistance is low. Therefore, when the air temperature is cold the ECM will receive a high voltage input, and when the air temperature is warm the ECM will receive a low voltage input.

DTC 25 will set if the following condition is met for at least 5 seconds:

- Voltage input at the ECM indicates an air temperature above 140°C (284°F).

Test Description:

Number(s) below refer to circled number(s) on the diagnostic chart.

1. This test simulates DTC 23. If the ECM stores DTC 23, the ECM and its wiring are OK and the IAT sensor is faulty. If DTC 25 resets, the IAT sensor is OK, and the wiring to the ECM or the ECM is faulty.

Diagnostic Aids:

When replacing the IAT sensor the "Temperature to Resistance Value" scale on the diagnostic chart may be used to test the sensor at various temperature levels to evaluate the possibility of a "shifted" (mis-scaled) sensor. A "shifted" sensor could result in poor driveability complaints. Refer to SECTION 6E2-C1 for additional IAT sensor specifications.

DTC 25

INTAKE AIR TEMPERATURE (IAT) SENSOR CIRCUIT (LOW VOLTAGE INPUT) 1.6L (VIN U) "E/J" TRUCK

IMPORTANT: MAKE SURE THAT DIAGNOSTIC CIRCUIT CHECK HAS BEEN PERFORMED BEFORE CONTINUING DIAGNOSIS.

FROM DIAGNOSTIC CIRCUIT CHECK.

1
- TURN IGNITION SWITCH TO "LOCK."
- CLEAR DTCs.
- DISCONNECT IAT SENSOR CONNECTOR.
- START AND RUN ENGINE FOR 1 MINUTE. DOES TECH 1 INDICATE DTC 23 OR DTC 25?

DTC 23
- REPLACE IAT SENSOR.

DTC 25
- CHECK FOR SHORT TO GROUND IN RED/BLK WIRE. IF OK, REPLACE ECM.

DIAGNOSTIC AID

IAT SENSOR		
TEMPERATURE TO RESISTANCE VALUES (APPROXIMATE)		
°F	°C	OHMS
210	99	200
160	71	450
100	38	1,300
70	21	2,500
40	4	5,200
20	-7	8,250
0	-18	14,800

"AFTER REPAIRS," CONFIRM "CLOSED LOOP" OPERATION, NO DTCs AND NO MALFUNCTION INDICATOR LAMP (MIL).

6-29-92
PC6231-6E2-JT-RS

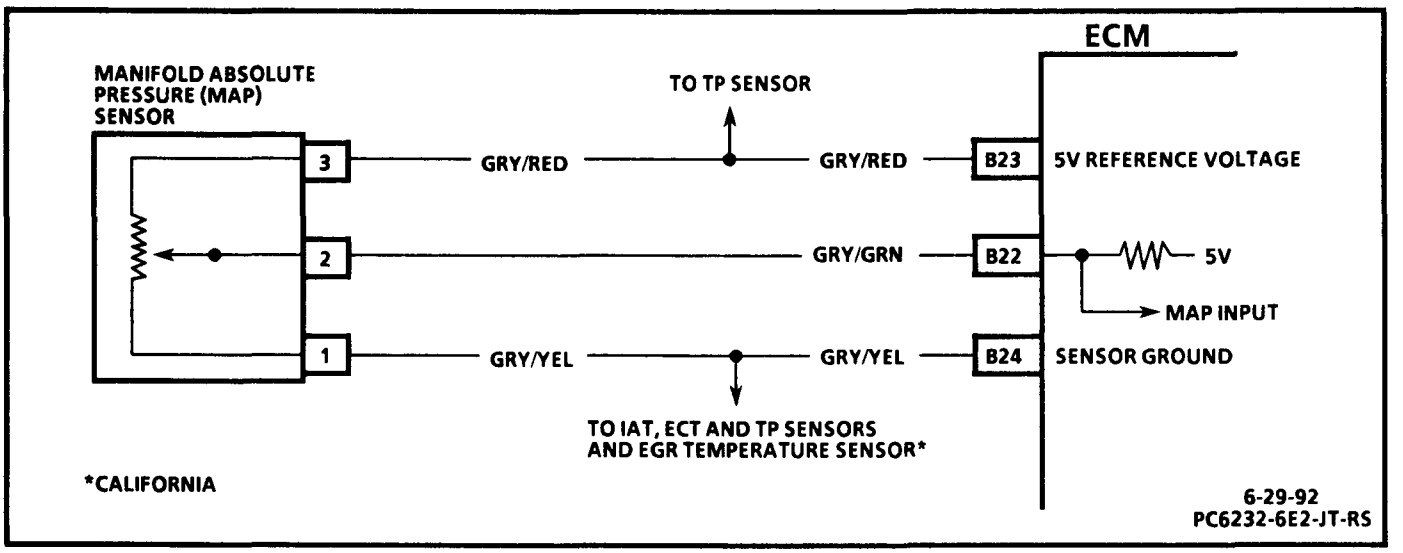

DTC 31

MANIFOLD ABSOLUTE PRESSURE (MAP) SENSOR CIRCUIT (HIGH VOLTAGE INPUT) 1.6L (VIN U) "E/J" TRUCK

Circuit Description:

The manifold absolute pressure (MAP) sensor measures the changes in the intake manifold pressure (vacuum). The engine control module (ECM) applies 5 volts to the MAP sensor. The change in the pressure, that results from engine load and rpm changes, is converted into a voltage input that is monitored by the ECM. A low voltage reading at the ECM indicates low manifold pressure, and a high voltage reading at the ECM indicates high manifold pressure.

DTC 31 will set if the following condition is met for 0.2 seconds:

- High voltage input at the ECM indicating intake manifold pressure above 840 mmHg.

Test Description:

Number(s) below refer to circled number(s) on the diagnostic chart.

1. This step checks the GRY/GRN wire for an open, a short to voltage and a faulty ECM. Under normal conditions the GRY/GRN wire should carry a little less than 5 volts. A short to 5 volts or B+ will cause DTC 31 to set.
2. This step checks for an open GRY/YEL wire, poor connection at the MAP sensor or ECM and for a faulty MAP sensor or ECM.

Diagnostic Aids:

Check for a leaking vacuum hose to MAP sensor.

An intermittent may be caused by a poor connection, rubbed through wire insulation, or a wire broken inside the insulation. Inspect ECM connectors for backed out terminals, improper mating, broken locks, improperly formed or damaged terminals, poor terminal to wire connection and damaged harness.

DTC 31

MANIFOLD ABSOLUTE PRESSURE (MAP) SENSOR CIRCUIT
(HIGH VOLTAGE INPUT)
1.6L (VIN U) "E/J" TRUCK

IMPORTANT: MAKE SURE THAT DIAGNOSTIC CIRCUIT CHECK HAS BEEN PERFORMED BEFORE CONTINUING DIAGNOSIS.

FROM DIAGNOSTIC CIRCUIT CHECK.

1
- TURN IGNITION SWITCH TO "LOCK."
- DISCONNECT MAP SENSOR CONNECTOR.
- TURN IGNITION SWITCH TO "ON."
- CONNECT A DIGITAL MULTIMETER FROM CONNECTOR CAVITY "2" TO GROUND (HARNESS SIDE).
- MEASURE VOLTAGE.

4.5-4.9 VOLTS

2
- CONNECT A DIGITAL MULTIMETER FROM CONNECTOR CAVITY "1" TO CAVITY "2" (HARNESS SIDE).
- MEASURE VOLTAGE.

4-5 VOLTS

- CHECK FOR A POOR CONNECTION AT MAP SENSOR. IF OK, REPLACE MAP SENSOR.

0 VOLTS

- CHECK FOR AN OPEN IN GRY/YEL WIRE.
- CHECK FOR A POOR CONNECTION AT ECM. IF OK, REPLACE ECM.

0 VOLTS

- CHECK FOR AN OPEN IN GRY/GRN WIRE.
- CHECK FOR POOR CONNECTION AT ECM. IF OK, REPLACE ECM.

5 VOLTS OR MORE

- CHECK FOR A SHORT TO VOLTAGE (5 VOLTS OR B +) IN GRY/GRN WIRE. IF OK, REPLACE ECM.

"AFTER REPAIRS," CONFIRM "CLOSED LOOP" OPERATION, NO DTCs AND NO MALFUNCTION INDICATOR LAMP (MIL).

6-29-92
PC6233-6E2-JT-RS

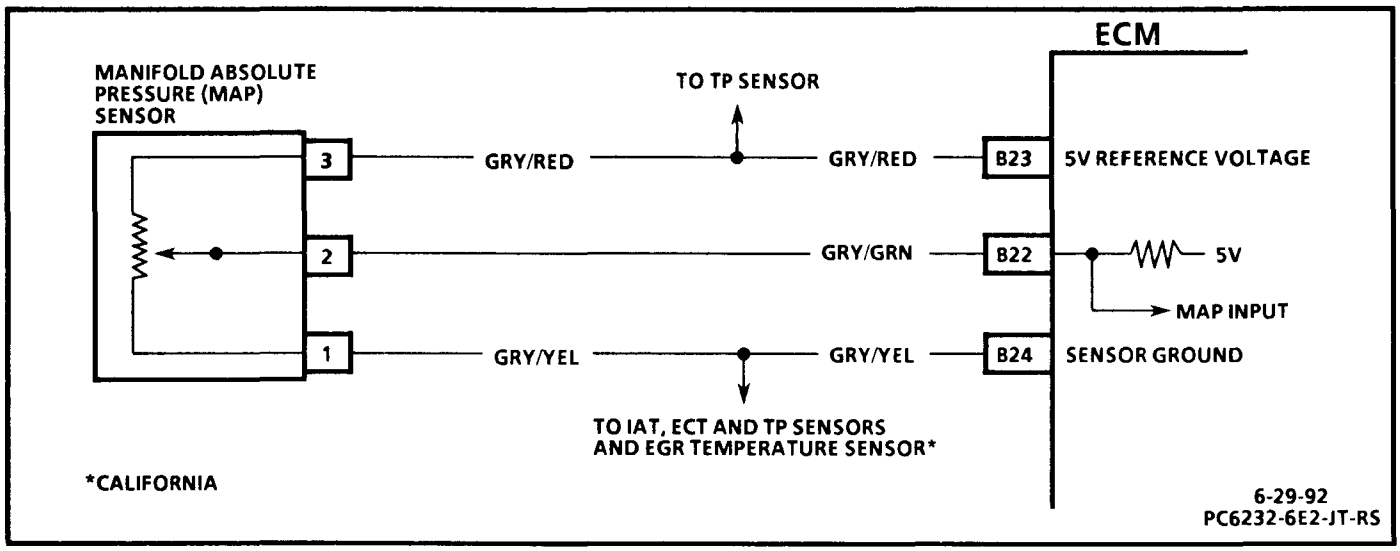

DTC 32

MANIFOLD ABSOLUTE PRESSURE (MAP) SENSOR CIRCUIT (LOW VOLTAGE INPUT) 1.6L (VIN U) "E/J" TRUCK

Circuit Description:

The manifold absolute pressure (MAP) sensor measures the changes in the intake manifold pressure (vacuum). The engine control module (ECM) applies 5 volts to the MAP sensor. The change in the pressure, that results from engine load and rpm changes, is converted into a voltage input that is monitored by the ECM. A low voltage reading at the ECM indicates low manifold pressure, and a high voltage reading at the ECM indicates high manifold pressure.

DTC 32 will set if the following condition is met for 0.2 seconds:

- Low voltage input at the ECM indicating intake manifold pressure below 40 mmHg.

Test Description:

Number(s) below refer to circled number(s) on the diagnostic chart.

1. This step checks that the ECM is providing a 5 volt reference.
2. This step checks for the a bias voltage to the MAP sensor which has a value between 4.5 and 4.9 volts.

Diagnostic Aids:

Check for a clogged or pinched vacuum hose to MAP sensor.

An intermittent may be caused by a poor connection, rubbed through wire insulation, or a wire broken inside the insulation. Inspect ECM connectors for backed out terminals, improper mating, broken locks, improperly formed or damaged terminals, poor terminal to wire connection and damaged harness.

DTC 22 and DTC 32 stored together could be the result of an open GRY/RED wire.

DTC 32

MANIFOLD ABSOLUTE PRESSURE (MAP) SENSOR CIRCUIT
(LOW VOLTAGE INPUT)
1.6L (VIN U) "E/J" TRUCK

IMPORTANT: MAKE SURE THAT DIAGNOSTIC CIRCUIT CHECK HAS BEEN PERFORMED BEFORE CONTINUING DIAGNOSIS.

1
- TURN IGNITION SWITCH TO "LOCK."
- DISCONNECT MAP SENSOR CONNECTOR.
- CONNECT A DIGITAL MULTIMETER FROM MAP SENSOR CONNECTOR CAVITY "3" TO GROUND.
- TURN IGNITION SWITCH TO "ON."
- MEASURE VOLTAGE.
  SHOULD BE 4-5 VOLTS.
  IS IT?

YES

NO
- CHECK FOR AN OPEN OR A SHORT TO GROUND IN GRY/RED WIRE.
  IF OK, REPLACE ECM.

2
- CONNECT A DIGITAL MULTIMETER FROM MAP SENSOR CONNECTOR CAVITY "2" TO GROUND.
- MEASURE VOLTAGE.
  SHOULD BE 4.5-4.9 VOLTS.
  IS IT?

YES

REPLACE MAP SENSOR.

NO

CHECK FOR A SHORT TO GROUND IN GRY/GRN WIRE.
IF OK, REPLACE ECM.

"AFTER REPAIRS," CONFIRM "CLOSED LOOP" OPERATION, NO DTCs AND NO MALFUNCTION INDICATOR LAMP (MIL).

6-29-92
PC6234-6E2-JT-RS

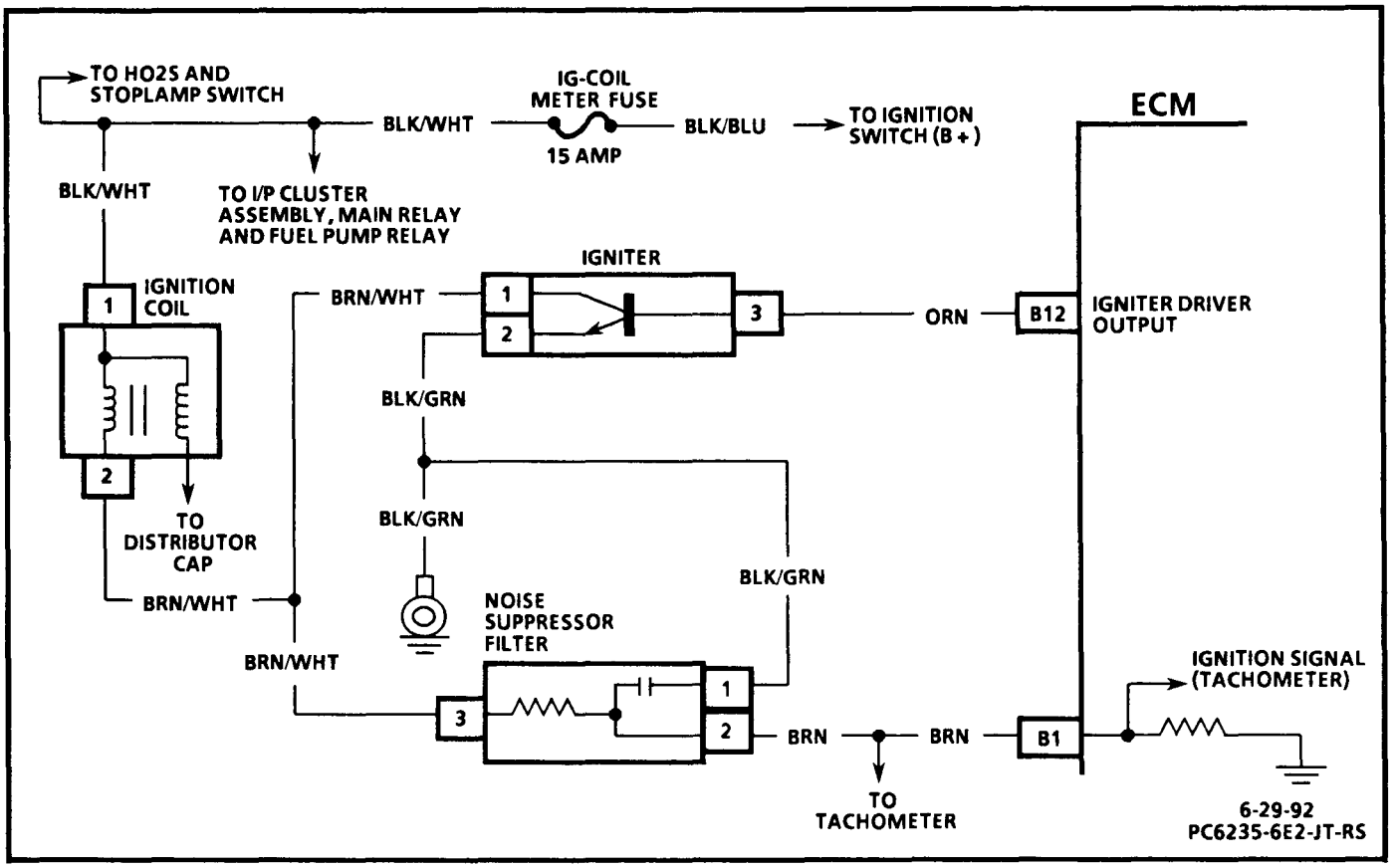

DTC 41

(Page 1 of 2)
IGNITION SIGNAL CIRCUIT
(NO SIGNAL)
1.6L (VIN U) "E/J" TRUCK

Circuit Description:

The engine control module (ECM) receives an ignition signal when the ignition switch is turned to the "ON" position. When the ignition switch is turned to the "START" position, this signal is toggled on and off through the igniter. As this signal is toggled on and off, so is the ignition coil, thus inducing a voltage in the secondary coil of the ignition coil. This induced voltage is then used to fire the spark plugs.

DTC 41 will set if the following condition is met:

- Toggled ignition signal not present at the ECM within 3 seconds of cranking.

Test Description:

Number(s) below refer to circled number(s) on the diagnostic chart.

1. This checks for power to the ignition coil.
2. This checks for a poor connection or for a faulty ignition coil.
3. This checks for an open in the BRN/WHT wire to the noise suppressor filter.
4. This checks for a poor connection or for a faulty noise suppressor filter.

Diagnostic Aids:

An intermittent may be caused by a poor connection, rubbed through wire insulation, or a wire broken inside the insulation. Inspect ECM connectors for backed out terminals, improper mating, broken locks, improperly formed or damaged terminals, poor terminal to wire connection and damaged harness.

DTC 41

(Page 1 of 2)

IGNITION SIGNAL CIRCUIT (NO SIGNAL) 1.6L (VIN U) "E/J" TRUCK

IMPORTANT: MAKE SURE THAT DIAGNOSTIC CIRCUIT CHECK HAS BEEN PERFORMED BEFORE CONTINUING DIAGNOSIS.

FROM DIAGNOSTIC CIRCUIT CHECK.

1. • TURN IGNITION SWITCH TO "ON."
   • BACKPROBE IGNITION COIL CONNECTOR WITH A DIGITAL MULTIMETER FROM CAVITY "1" TO GROUND.
   • MEASURE VOLTAGE.
   SHOULD BE B+.
   IS IT?

YES → 2

NO → REPAIR OPEN IN BLK/WHT WIRE.

2. • BACKPROBE IGNITION COIL CONNECTOR WITH A DIGITAL MULTIMETER FROM CAVITY "2" TO GROUND.
   • MEASURE VOLTAGE.
   SHOULD BE B+.
   IS IT?

YES → 3

NO → • CHECK FOR POOR CONNECTION AT IGNITION COIL.
IF OK, REPLACE IGNITION COIL.

3. • BACKPROBE NOISE SUPPRESSOR FILTER CONNECTOR WITH A DIGITAL MULTIMETER FROM CAVITY "3" TO GROUND.
   • MEASURE VOLTAGE.
   SHOULD BE B+
   IS IT?

YES → 4

NO → REPAIR OPEN IN BRN/WHT WIRE.

4. • BACKPROBE NOISE SUPPRESSOR FILTER CONNECTOR WITH A DIGITAL MULTIMETER FROM CAVITY "2" TO GROUND.
   • MEASURE VOLTAGE.
   SHOULD BE B+.
   IS IT?

YES → REFER TO DTC 41 CHART PAGE 2 OF 2.

NO → • CHECK FOR A POOR CONNECTION AT NOISE SUPPRESSOR FILTER.
IF OK, REPLACE NOISE SUPPRESSOR FILTER.

"*AFTER REPAIRS*," CONFIRM "CLOSED LOOP" OPERATION, NO DTCs AND NO MALFUNCTION INDICATOR LAMP (MIL).

6-29-92
PC6236-6E2-JT-RS

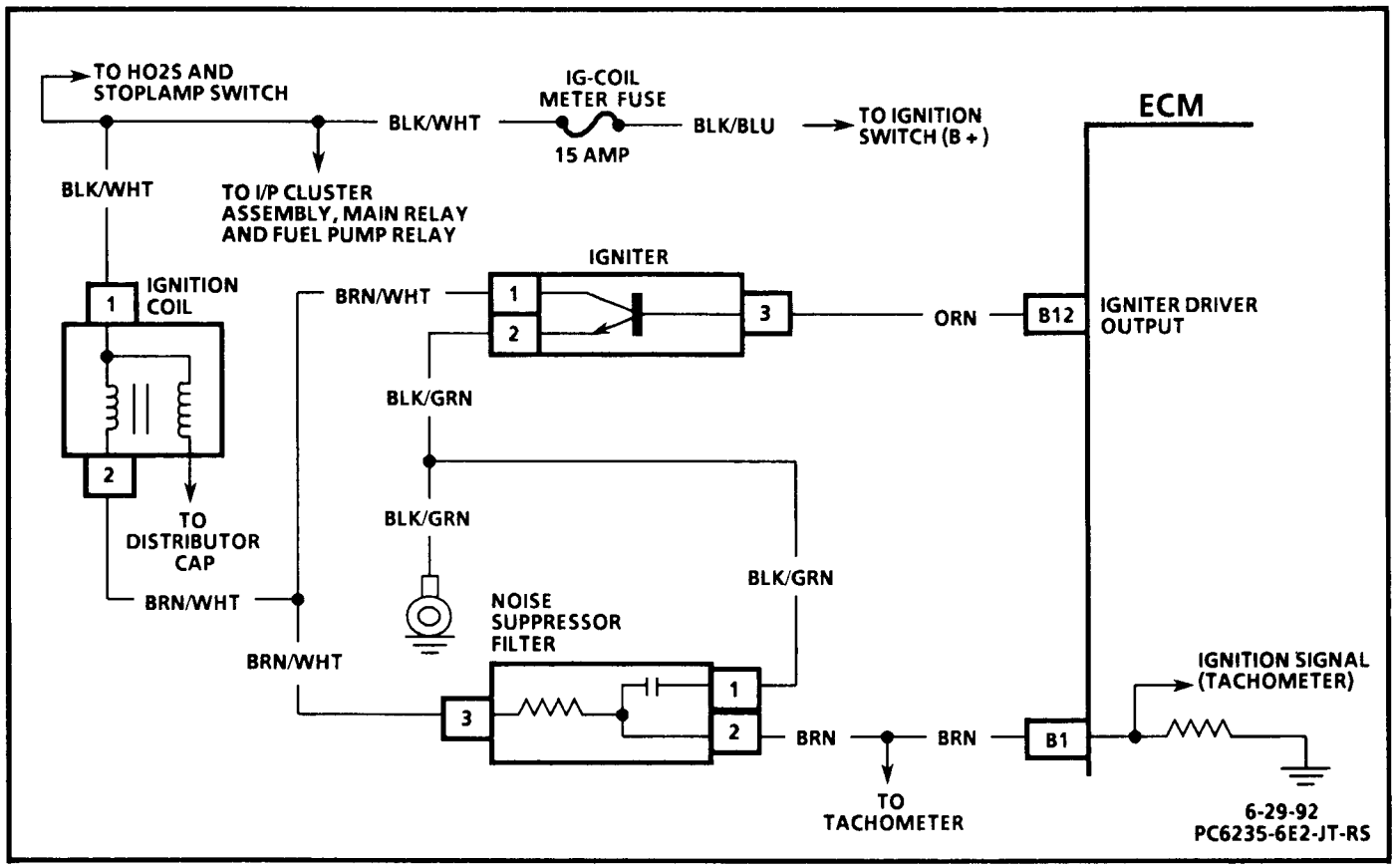

DTC 41

(Page 2 of 2)
IGNITION SIGNAL CIRCUIT
(NO SIGNAL)
1.6L (VIN U) "E/J" TRUCK

Circuit Description:

The engine control module (ECM) receives an ignition signal when the ignition switch is turned to the "ON" position. When the ignition switch is turned to the "START" position, this signal is toggled on and off through the igniter. As this signal is toggled on and off, so is the ignition coil, thus inducing a voltage in the secondary coil of the ignition coil. This induced voltage is then used to fire the spark plugs.

DTC 41 will set if the following condition is met:

- Toggled ignition signal not present at the ECM within 3 seconds of cranking.

Test Description: Number(s) below refer to circled number(s) on the diagnostic chart.

5. This checks for an open in the BRN wire to the ECM.
6. This checks for an open in the BRN/WHT wire to the igniter.
7. This checks the igniter for a good ground.
8. This checks to see if the ECM is toggling the ignition signal. Either an open, a short to ground or a faulty ECM or igniter is the fault.

DTC 41

(Page 2 of 2)

IGNITION SIGNAL CIRCUIT (NO SIGNAL) 1.6L (VIN U) "E/J" TRUCK

FROM DTC 41 CHART PAGE 1 OF 2.

5
- TURN IGNITION SWITCH TO "LOCK."
- DISCONNECT ECM CONNECTOR C2.
- CONNECT A DIGITAL MULTIMETER FROM ECM CONNECTOR C2 CAVITY "B1" TO GROUND.
- TURN IGNITION SWITCH TO "ON."
- MEASURE VOLTAGE.
  SHOULD BE B+.
  IS IT?

YES →

6
- TURN IGNITION SWITCH TO "LOCK."
- RECONNECT ECM CONNECTOR C2.
- TURN IGNITION SWITCH TO "ON."
- BACKPROBE IGNITER CONNECTOR WITH A DIGITAL MULTIMETER FROM CAVITY "1" TO GROUND.
- MEASURE VOLTAGE.
  SHOULD BE B+.
  IS IT?

NO →

CHECK FOR AN OPEN IN BRN WIRE.
IF OK, REPLACE ECM.

YES →

7
- TURN IGNITION SWITCH TO "LOCK."
- DISCONNECT IGNITER CONNECTOR.
- CONNECT A DIGITAL MULTIMETER FROM CONNECTOR CAVITY "1" TO CAVITY "2".
- TURN IGNITION SWITCH TO "ON."
  SHOULD BE B+.
  IS IT?

NO →

REPAIR OPEN IN BRN/WHT WIRE.

YES →

8
- CONNECT A TEST LIGHT FROM IGNITER CONNECTOR CAVITY "3" TO B+.
- NOTE TEST LIGHT WHILE CRANKING ENGINE.

NO →

- CHECK FOR A POOR GROUND CONNECTION.
  IF OK, REPAIR OPEN IN BLK/GRN WIRE.

FLASHES →

- CHECK FOR A POOR CONNECTION AT IGNITER.
  IF OK, REPLACE IGNITER.

ON STEADY →

- CHECK FOR A SHORT TO GROUND IN ORN WIRE.
  IF OK, REPLACE ECM.

OFF STEADY →

- CHECK FOR AN OPEN IN ORN WIRE.
- CHECK FOR A POOR CONNECTION AT ECM.
  IF OK, REPLACE ECM.

"AFTER REPAIRS," CONFIRM "CLOSED LOOP" OPERATION, NO DTCs AND NO MALFUNCTION INDICATOR LAMP (MIL).

7-1-92
PC6237-6E2-JT-RS

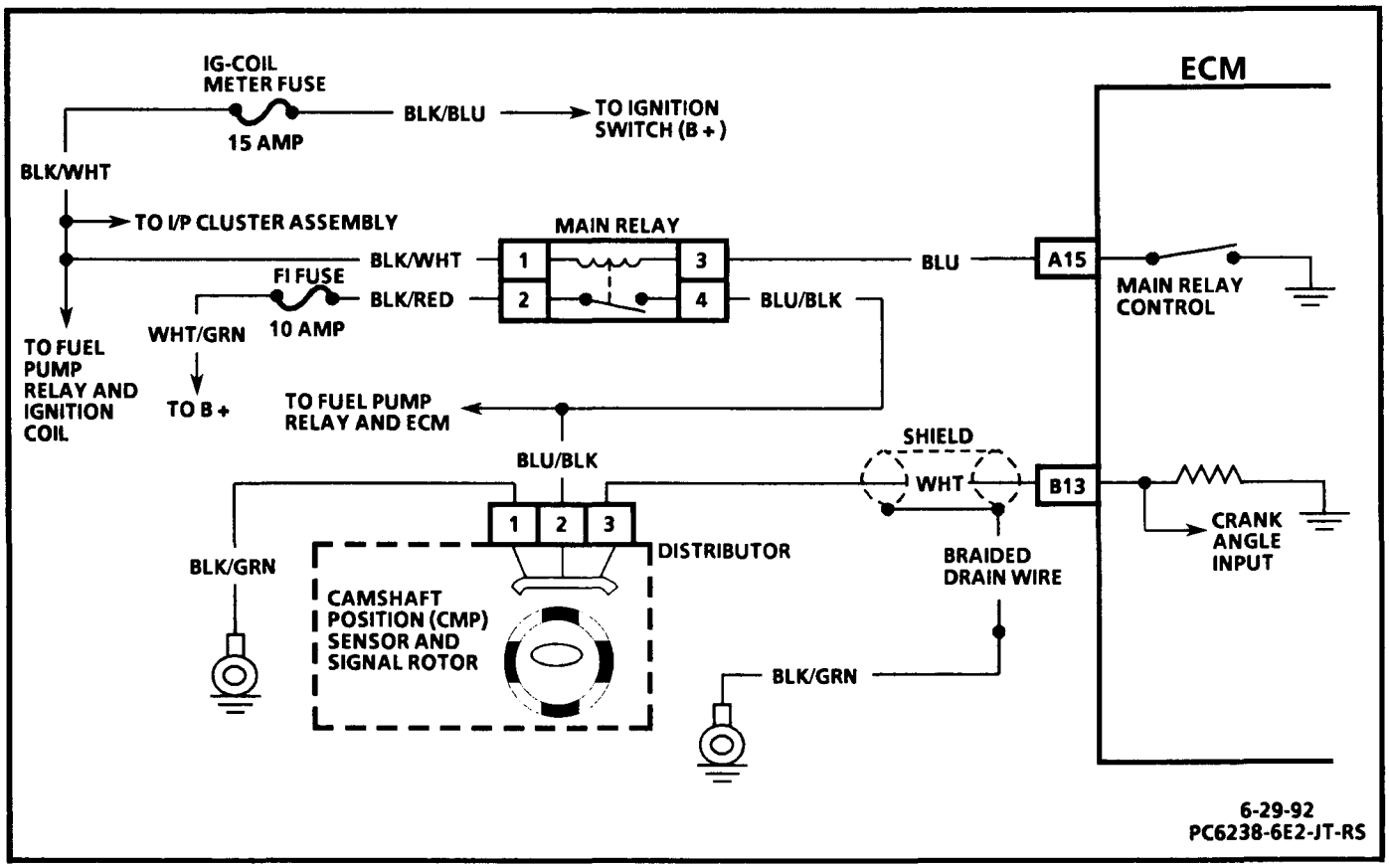

DTC 42

CAMSHAFT POSITION (CMP) SENSOR CIRCUIT
(NO SIGNAL FOR 2 SECONDS)
1.6L (VIN U) "E/J" TRUCK

Circuit Description:

When the distributor shaft rotates, a magnetic field is generated due to changes in the air gap between the camshaft position (CMP) sensor and the signal rotor. As a result, a reference voltage is induced in the CMP sensor. This reference voltage is monitored by the engine control module (ECM) to determine the crank angle input. The ECM uses the crank angle input to determine when to ground the igniter, thus controlling the ignition coil and ignition timing.

DTC 42 will set if the following condition is met for 2 seconds:

- No crank angle input at the ECM.

Test Description:

Number(s) below refer to circled number(s) on the diagnostic chart.

1. This checks to see if the problem is in the CMP sensor and its wiring, or faulty ECM.
2. This checks for an open in the WHT wire.
3. This checks for an open in the BLU/BLK wire.
4. This checks for a poor ground connection and open BLK/GRN wire, or a misadjusted or faulty CMP sensor.

Diagnostic Aids:

A loose or damaged CMP sensor could cause an intermittent DTC.

A misaligned crank angle sensor or improper air gap could result in DTC 42 or an intermittent "Cranks But Won't Run"; refer to SECTION 6D4 for CMP sensor specifications.

DTC 42

CAMSHAFT POSITION (CMP) SENSOR CIRCUIT (NO SIGNAL FOR 2 SECONDS) 1.6L (VIN U) "E/J" TRUCK

IMPORTANT: MAKE SURE THAT DIAGNOSTIC CIRCUIT CHECK HAS BEEN PERFORMED BEFORE CONTINUING DIAGNOSIS.

FROM DIAGNOSTIC CIRCUIT CHECK

1
- TURN IGNITION SWITCH TO "LOCK."
- DISCONNECT ECM CONNECTOR C2.
- CONNECT A TEST LIGHT FROM ECM CONNECTOR C2 CAVITY "B13" TO B+.
- NOTE TEST LIGHT WHILE CRANKING ENGINE.

OFF STEADY

2
- WITH A TEST LIGHT TO B+, BACKPROBE DISTRIBUTOR CONNECTOR CAVITY "3".
- NOTE TEST LIGHT WHILE CRANKING ENGINE. SHOULD FLASH. DOES IT?

NO

3
- TURN IGNITION SWITCH TO "LOCK."
- DISCONNECT DISTRIBUTOR CONNECTOR.
- CONNECT A TEST LIGHT FROM DISTRIBUTOR CONNECTOR CAVITY "2" TO GROUND.
- TURN IGNITION SWITCH TO "ON." TEST LIGHT SHOULD LIGHT. DOES IT?

YES

4
- CONNECT A TEST LIGHT FROM DISTRIBUTOR CONNECTOR CAVITY "3" TO B+. TEST LIGHT SHOULD LIGHT. DOES IT?

YES

ADJUST/REPLACE CMP SENSOR IN DISTRIBUTOR.

NO

- CHECK FOR A POOR GROUND CONNECTION. IF OK, REPAIR OPEN IN BLK/GRN WIRE.

NO

REPAIR OPEN IN BLU/BLK WIRE.

YES

REPAIR OPEN IN WHT WIRE.

ON STEADY

- CHECK FOR A SHORT TO GROUND IN WHT WIRE. IF OK, ADJUST/REPLACE CMP SENSOR IN DISTRIBUTOR.

FLASHING

- CHECK FOR A POOR CONNECTION AT ECM. IF OK, REPLACE ECM.

"AFTER REPAIRS," CONFIRM "CLOSED LOOP" OPERATION, NO DTCs AND NO MALFUNCTION INDICATOR LAMP (MIL).

7-7-92
PC6239-6E2-JT-RS

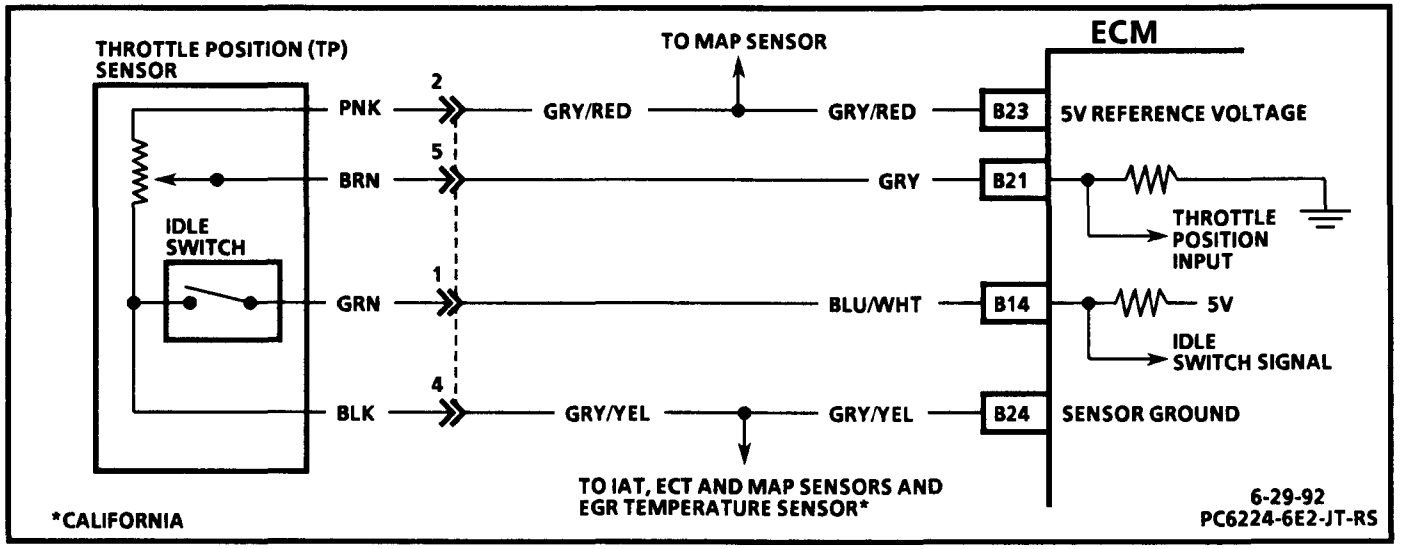

DTC 44

IDLE SWITCH CIRCUIT (CIRCUIT OPEN OR MISADJUSTED) 1.6L (VIN U) "E/J" TRUCK

Circuit Description:

The throttle position (TP) sensor has an idle switch that sends a signal to the engine control module (ECM). The ECM applies 5 volts to the idle switch. The idle switch is closed with the engine idling (low voltage signal at the ECM) and open with the engine off idle (high voltage signal at the ECM). When the ECM detects a low voltage signal the throttle valve is closed, and when the ECM detects a high voltage signal the throttle valve is open.

DTC 44 will set if the following condition is met for at least 10 seconds:

- High voltage input at the ECM indicated with the engine running at idle (less than 1000 rpm).

Test Description:

Number(s) below refer to circled number(s) on the diagnostic chart.

1. By jumping the TP sensor the ECM should detect a low voltage signal, and the Tech 1 should indicate "ON." This will determine whether the problem is in the wiring, the ECM or a misadjusted/faulty TP sensor.
2. This step checks the GRY/YEL and BLU/WHT wires for an open, and for a faulty ECM.

Diagnostic Aids:

A misadjusted TP sensor could cause DTC 44 to set. Before replacing the TP sensor, refer to SECTION 6E2-C1 for adjustment procedures.

DTC 44

IDLE SWITCH CIRCUIT
(CIRCUIT OPEN OR MISADJUSTED)
1.6L (VIN U) "E/J" TRUCK

IMPORTANT: MAKE SURE THAT DIAGNOSTIC CIRCUIT CHECK HAS BEEN PERFORMED BEFORE CONTINUING DIAGNOSIS.

FROM DIAGNOSTIC CIRCUIT CHECK

1
- TURN IGNITION SWITCH TO "LOCK."
- DISCONNECT TP SENSOR CONNECTOR.
- CONNECT A JUMPER FROM CONNECTOR CAVITY "1" TO CAVITY "4" (HARNESS SIDE).
- TURN IGNITION SWITCH TO "ON."

DOES TECH 1 IDLE SWITCH DISPLAY INDICATE "ON" OR "OFF"?

"OFF"

2
- REMOVE JUMPER FROM TP SENSOR CONNECTOR.
- CONNECT A JUMPER FROM CONNECTOR CAVITY "1" TO GROUND.

DOED TECH 1 IDLE SWITCH DISPLAY INDICATE "ON" OR "OFF"?

"ON"
- CHECK FOR AN OPEN IN GRY/YEL WIRE.
- CHECK FOR POOR CONNECTION AT ECM.

IF OK, REPLACE ECM.

"OFF"
- CHECK FOR AN OPEN IN BLU/WHT WIRE.
- CHECK FOR POOR CONNECTION AT ECM.

IF OK, REPLACE ECM.

"ON"
- CHECK FOR A POOR CONNECTION AT TP SENSOR.

IF OK, ADJUST/REPLACE TP SENSOR.

"AFTER REPAIRS," CONFIRM "CLOSED LOOP" OPERATION, NO DTCs AND NO MALFUNCTION INDICATOR LAMP (MIL).

6-29-92
PC6240-6E2-JT-RS

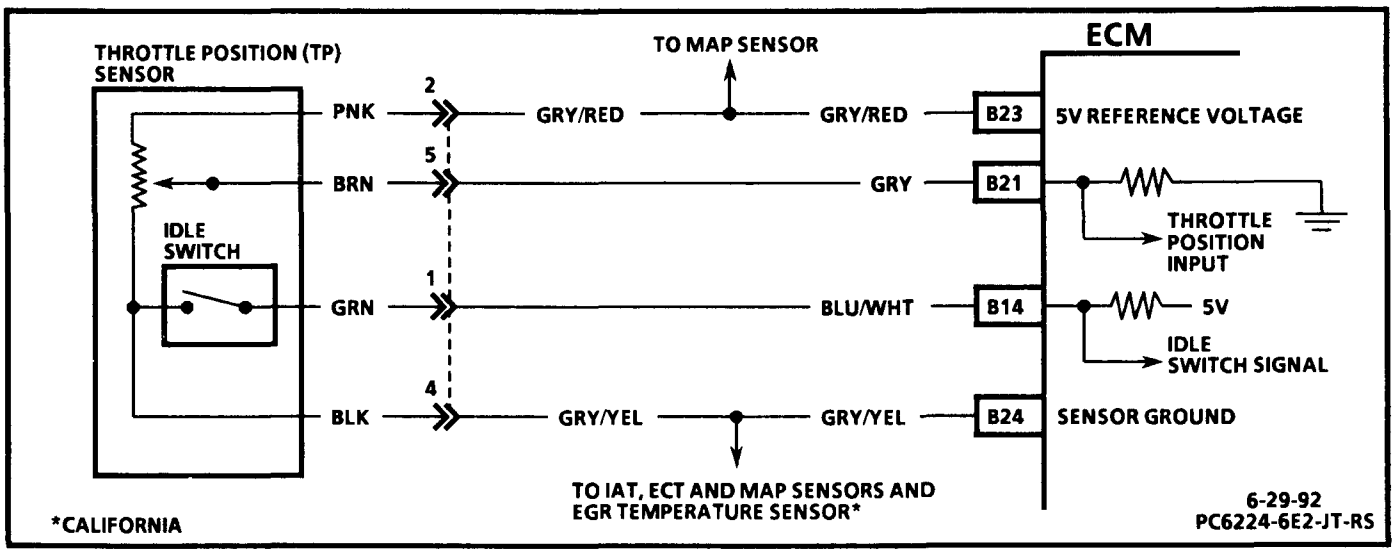

DTC 45

IDLE SWITCH CIRCUIT
(CIRCUIT GROUNDED OR MISADJUSTED)
1.6L (VIN U) "E/J" TRUCK

Circuit Description:

The throttle position (TP) sensor has an idle switch that sends a signal to the engine control module (ECM). The ECM applies 5 volts to the idle switch. The idle switch is closed with the engine idling (low voltage signal at the ECM) and open with the engine off idle (high voltage signal at the ECM). When the ECM detects a low voltage signal the throttle valve is closed, and when the ECM detects a high voltage signal the throttle valve is open.

DTC 45 will set if the following conditions are met for at least 5 seconds:

- Low voltage input at the ECM indicated with the engine running off idle (greater than 2900 rpm).
- MAP greater that 320 mmHg.

Test Description:

Number(s) below refer to circled number(s) on the diagnostic chart.

1. By disconnecting the TP sensor the ECM should detect a high voltage signal, and the Tech 1 should indicate "OFF." This will check for a short to ground in the BLU/WHT wire.
2. This checks for a short to B+ in the GRY/RED wire or a misadjusted/faulty TP sensor.

Diagnostic Aids:

A misadjusted TP sensor could cause DTC 45 to set. Before replacing the TP sensor, refer to SECTION 6E2-C1 for adjustment procedures.

DTC 45

IDLE SWITCH CIRCUIT (CIRCUIT GROUNDED OR MISADJUSTED) 1.6L (VIN U) "E/J" TRUCK

IMPORTANT: MAKE SURE THAT DIAGNOSTIC CIRCUIT CHECK HAS BEEN PERFORMED BEFORE CONTINUING DIAGNOSIS.

FROM DIAGNOSTIC CIRCUIT CHECK

(1)
- TURN IGNITION SWITCH TO "LOCK."
- DISCONNECT TP SENSOR CONNECTOR.
- TURN IGNITION SWITCH TO "ON."

DOES TECH 1 IDLE SWITCH DISPLAY INDICATE "ON" OR "OFF"?

"OFF"

(2)
- CONNECT A DIGITAL MULTIMETER FROM TP SENSOR CONNECTOR CAVITY "2" TO GROUND.
- MEASURE VOLTAGE

IS VOLTAGE 4-5 VOLTS OR B+?

4-5 VOLTS

ADJUST/REPLACE TP SENSOR.

B+

- CHECK FOR A SHORT TO VOLTAGE IN GRY/RED WIRE.

IF OK, REPLACE ECM.

"ON"

- CHECK FOR A SHORT TO GROUND IN BLU/WHT WIRE.

IF OK, REPLACE ECM.

"AFTER REPAIRS," CONFIRM "CLOSED LOOP" OPERATION, NO DTCs AND NO MALFUNCTION INDICATOR LAMP (MIL).

7-1-92
PC6241-6E2-JT-RS

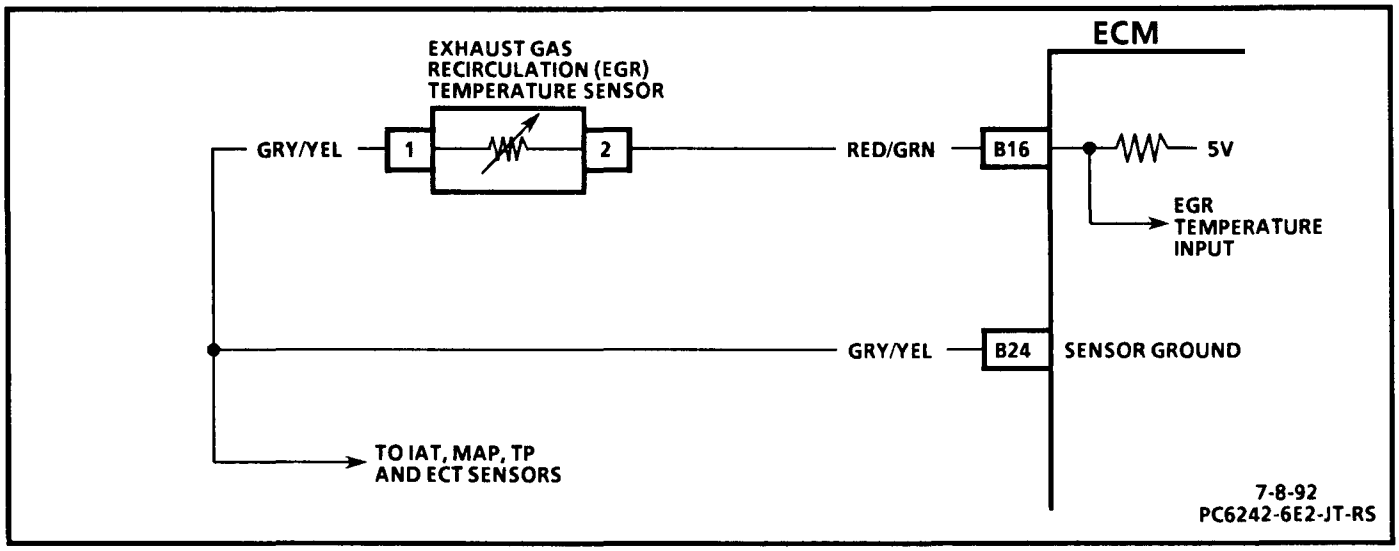

DTC 51

EXHAUST GAS RECIRCULATION (EGR) CIRCUIT (CALIFORNIA) 1.6L (VIN U) "E/J" TRUCK

Circuit Description:

The exhaust gas recirculation (EGR) temperature sensor in mounted on top of the EGR valve. The sensor has a variable resistor that changes along with the temperature of the exhaust gases. The engine control module (ECM) applies 5 volts to the sensor and reads the voltage across the sensor. As the exhaust gas temperature increases, the sensor's resistance decreases, providing the ECM with a low voltage input. When the exhaust gas temperature decreases, the sensor's resistance increases, providing the ECM with a high voltage input. The ECM calculates the temperature of the exhaust gases by the voltage inputs that it receives.

DTC 51 will set if one of the following two conditions is met:

Condition 1: shorted sensor with the following for at least 3 seconds:

- Engine coolant temperature <40° C (104° F).
- Exhaust gas temperature > 220° C (428° F).

Condition 2: open sensor with the following for at least 80 seconds:

- Engine coolant temperature >70° C (158° F).
- Intake air temperature > 50° C (122° F).

Test Description:

Number(s) below refer to circled number(s) on the diagnostic chart.

1. Checks for proper EGR valve operation.
2. Checks for 5 volt reference to the EGR temperature sensor.
3. Checks for a short to voltage in RED/GRN wire.
4. Checks for an open GRY/YEL wire, a faulty ECM or a faulty EGR temperature sensor.

Diagnostic Aids:

An intermittent may be caused by a poor connection, rubbed through wire insulation, or a wire broken inside the insulation. Inspect ECM connectors for backed out terminals, improper mating, broken locks, improperly formed or damaged terminals, poor terminal to wire connection and damaged harness.

DTC 51

EXHAUST GAS RECIRCULATION (EGR) CIRCUIT (CALIFORNIA) 1.6L (VIN U) "E/J" TRUCK

IMPORTANT: MAKE SURE THAT DIAGNOSTIC CIRCUIT CHECK HAS BEEN PERFORMED BEFORE CONTINUING DIAGNOSIS.

FROM DIAGNOSTIC CIRCUIT CHECK.

1
- START AND RUN ENGINE AT NORMAL OPERATING TEMPERATURE.
- PULL THE DIAPHRAGM FORWARD ON THE EGR VALVE. ENGINE SHOULD ROUGHEN OR STALL. DOES IT?

YES

- RAISE AND LOWER ENGINE SPEED.
- NOTE EGR VALVE DIAPHRAGM OPERATION. DIAPHRAGM SHOULD MOVE FORWARD WHEN INCREASING SPEED AND SHOULD MOVE BACK WHEN DECREASING SPEED. DOES IT?

NO

REFER TO CHART C-7 IN SECTION 6E2-C7 FOR EGR VALVE CHECK.

YES

2
- TURN IGNITION SWITCH TO "LOCK."
- DISCONNECT EGR TEMPERATURE SENSOR CONNECTOR.
- CONNECT A DIGITAL MULTIMETER FROM CONNECTOR CAVITY "2" TO GROUND.
- TURN IGNITION SWITCH TO "ON."
- MEASURE VOLTAGE.

NO

REFER TO CHART C-7 IN SECTION 6E2-C7 FOR EGR VALVE CHECK.

4-5 VOLTS

B +

- CHECK FOR A SHORT TO B + IN RED/GRN WIRE. IF OK, REPLACE ECM.

0 VOLTS

- CHECK FOR AN OPEN OR SHORT TO GROUND IN RED/GRN WIRE. IF OK, REPLACE ECM.

3
- TURN IGNITION SWITCH TO "LOCK."
- DISCONNECT ECM CONNECTOR C2.
- CONNECT A DIGITAL MULTIMETER FROM EGR TEMPERATURE SENSOR CONNECTOR CAVITY "2"TO GROUND.
- TURN IGNITION SWITCH TO "ON."
- MEASURE VOLTAGE . SHOULD BE 0 VOLTS. IS IT?

YES

4
- TURN IGNITION SWITCH TO "LOCK."
- RECONNECT ECM CONNECTOR C2.
- CONNECT A DIGITAL MULTIMETER FROM EGR TEMPERATURE SENSOR CONNECTOR CAVITY "1" TO CAVITY "2".
- TURN IGNITION SWITCH TO "ON."
- MEASURE VOLTAGE. SHOULD BE 4-5 VOLTS. IS IT?

NO

REPAIR SHORT TO VOLTAGE IN RED/GRN WIRE.

YES

- CHECK FOR A POOR CONNECTION AT EGR TEMPERATURE SENSOR. IF OK, REPLACE EGR TEMPERATURE SENSOR.

NO

- CHECK FOR AN OPEN IN GRY/YEL WIRE. IF OK, REPLACE ECM.

"AFTER REPAIRS," CONFIRM "CLOSED LOOP" OPERATION, NO DTCs AND NO MALFUNCTION INDICATOR LAMP (MIL).

6-29-92
PC6243-6E2-JT-RS

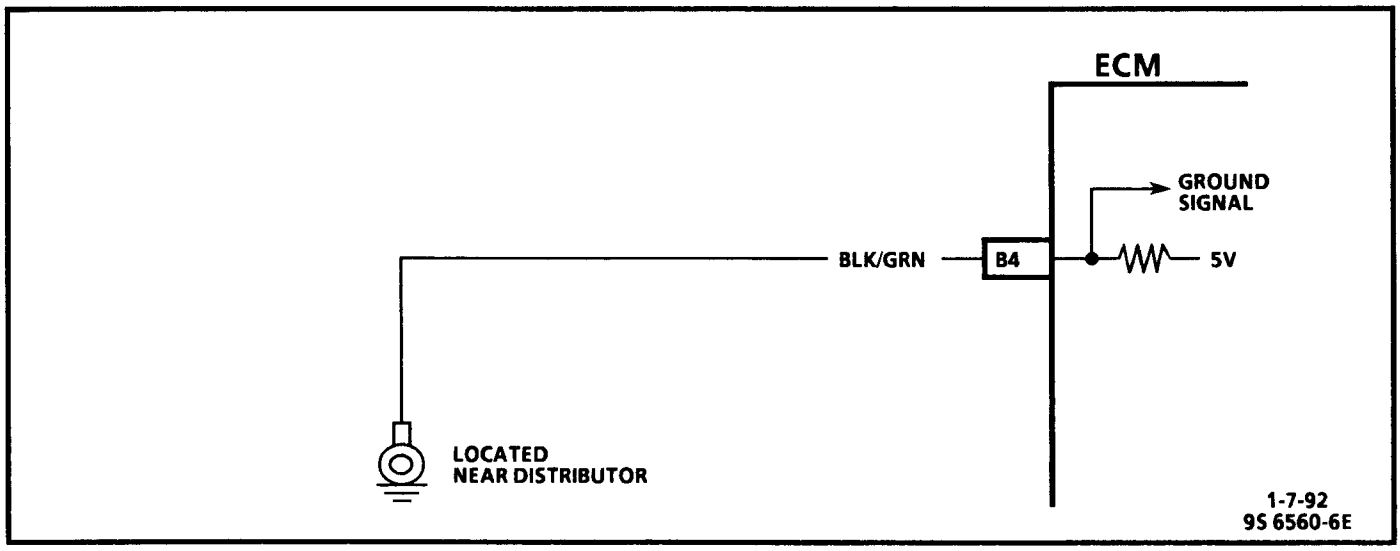

DTC 53

GROUND CIRCUIT (CALIFORNIA)
(CIRCUIT OPEN)
1.6L (VIN U) "E/J" TRUCK

Circuit Description:

On California vehicles, an additional ground is supplied to the engine control module (ECM). The ECM supplies 5 volts to the BLK/GRN wire through a fixed resistor. The ECM looks for a low voltage signal.
DTC 53 will set if the following condition is met for 3 seconds:

- High voltage signal indicated at the ECM.

Test Description:

Number(s) below refer to circled number(s) on the diagnostic chart.

1. Probing the BLK/GRN wire cavity with a test light to B+ checks for an open in the BLK/GRN wire, a poor ground connection or a faulty ECM.

Diagnostic Aids:

A poor ground connection could cause DTC 53 to set. Make sure that the ground connection is clean and tight.

DTC 53

GROUND CIRCUIT (CALIFORNIA)
(CIRCUIT OPEN)
1.6L (VIN U) "E/J" TRUCK

IMPORTANT: MAKE SURE THAT DIAGNOSTIC CIRCUIT CHECK HAS BEEN PERFORMED BEFORE CONTINUING DIAGNOSIS.

FROM DIAGNOSTIC CIRCUIT CHECK.

1
- TURN IGNITION SWITCH TO "LOCK."
- DISCONNECT ECM CONNECTOR C2.
- CONNECT A TEST LIGHT FROM ECM CONNECTOR C1 CAVITY "B4" TO B+. TEST LIGHT SHOULD LIGHT. DOES IT?

YES
- CHECK FOR A POOR CONNECTION AT ECM. IF OK, REPLACE ECM.

NO
- CHECK FOR A POOR GROUND CONNECTION. IF OK, REPAIR OPEN IN BLK/GRN WIRE.

"AFTER REPAIRS," CONFIRM "CLOSED LOOP" OPERATION, NO DTCs AND NO MALFUNCTION INDICATOR LAMP (MIL).

7-1-92
PC6244-6E2-JT-RS

BLANK

SECTION B
SYMPTOMS
CONTENTS

Important Preliminary Checks 6E2-B-2
Before Starting this Section 6E2-B-2
Symptom 6E2-B-2
Visual/Physical Check 6E2-B-2
Intermittents (1 of 2) 6E2-B-3
Hard Start 6E2-B-5
Surges and/or Chuggles 6E2-B-6
Lack of Power, Sluggish, or Spongy 6E2-B-7
Detonation/Spark Knock (1 of 2) 6E2-B-8
Hesitation, Sag, Stumble 6E2-B-10
Cuts Out, Misses 6E2-B-11
Rough, Unstable or Incorrect Idle, Stalling (1 of 2) 6E2-B-12
Poor Fuel Economy 6E2-B-14
Excessive Exhaust Emissions or Odors 6E2-B-15
Dieseling, Run-on 6E2-B-16
Backfire 6E2-B-17

IMPORTANT PRELIMINARY CHECKS

BEFORE STARTING THIS SECTION

- Before using this section you should have performed the "Diagnostic Circuit Check" in SECTION 6E2-A and determined that:
  1. The ECM and the MIL are operating normally.
  2. That there are NO DTCs stored, or that there is a DTC stored, but NO MIL.

SYMPTOM

- Verify the customer complaint, and locate the correct symptom below. Check the items indicated under that symptom.

VISUAL/PHYSICAL CHECK

- Several of the following symptom procedures call for a careful visual/physical check. The importance of this step cannot be stressed too strongly - it can lead to correcting a problem without further checks and can save valuable time. This check should include:
- ECM grounds for being clean, tight, and in their proper locations.
- Vacuum hoses for splits, kinks and proper connections, as shown on "Vehicle Emission Control Information" label. Check thoroughly for any type of leak or restriction.
- Air leaks at throttle body mounting area and intake manifold sealing surfaces.
- Ignition wires for cracking, hardness, proper routing and carbon tracking.
- Wiring for proper connections, pinches, and cuts.

INTERMITTENTS

(Page 1 of 2)

Definition: Problem may or may not light the MIL, or store a DTC.

PRELIMINARY CHECKS

- Perform the careful visual/physical checks as described at start of SECTION 6E2-B.

DIAGNOSTIC TROUBLE CODE (DTC) CHARTS IN SECTION 6E2-A

- DO NOT use the DTC charts in SECTION 6E2-A for intermittent problems. The fault must be present to locate the problem. If a fault is intermittent, use of DTC charts may result in replacement of good parts.

FAULTY ELECTRICAL CONNECTIONS OR WIRING

- Most intermittent problems are caused by faulty electrical connections or wiring. Perform careful check of suspect circuits for:
  - Poor mating of the connector halves, or terminals not fully seated in the connector body (backed out).
  - Improperly formed or damaged terminals. All connector terminals in problem circuit should be carefully reformed or replaced to ensure proper contact tension.
  - Poor terminal to wire connection.

ROAD TEST

- If a visual/physical check does not find the cause of the problem, the vehicle can be driven with a digital multimeter or Tech 1 "Scan" tool connected to a suspected circuit. An abnormal reading, when the problem occurs, indicates the problem may be in that circuit. If the wiring and connectors check OK, and a DTC was stored, refer to the "Diagnostic Circuit Check" in SECTION 6E2-A.

INTERMITTENTS

(Page 2 of 2)

Definition: Problem may or may not light the MIL, or store a DTC.

INTERMITTENT MALFUNCTION INDICATOR LAMP (MIL)

- An intermittent MIL, and NO DTCs,, may be caused by:
  - Electrical system interference caused by a defective relay, ECM driven solenoid, or switch. They can cause a sharp electrical surge. Normally, the problem will occur when the faulty component is operated.
  - Improper installation of electrical options, such as lights, 2-way radios, etc.
  - ESA wires should be routed away from spark plug wires, ignition system components and generator.
  - Ignition secondary wires shorted to ground.
  - MIL PPL/YEL wire for intermittent short to ground.
  - ECM power and grounds.

LOSS OF DTC MEMORY

- To check, disconnect ECT sensor connector and idle engine until MIL lights. DTC 14 should be stored, and kept in memory when the ignition switch is turned to the "LOCK" position for at least 10 seconds.
  - Check TAIL DOME Fuse.
  - Check circuit for open or short to ground.

  If OK, the ECM is faulty.

HARD START

Definition: Engine cranks OK, but does not start for a long time. Does eventually run, or may start but immediately dies.

PRELIMINARY CHECKS

- Perform the careful visual/physical checks as described at start of SECTION 6E2-B.
- Make sure the driver is using the correct starting procedure.

SENSORS

- **CHECK:** ECT sensor - Using a digital multimeter to measure resistance, compare ECT sensor resistance with ambient temperature on a cold engine.
  - If ECT sensor resistance is greater than or less than ambient air temperature, check for high resistance in ECT sensor circuit or sensor itself. Compare resistance value to the "Diagnostic Aids" chart on DTC 14 or DTC 15 chart.
- **CHECK:** TP sensor- For a sticking throttle shaft or binding linkage or misadjusted. Refer to SECTION 6E2-C1 for adjustment procedures.

FUEL SYSTEM

- **NOTICE:** Fuel pump relay operation - pump should "run" for 3 seconds when the ignition switch is turned to the "ON" position.
- **CHECK:** Fuel pressure, refer to chart A-7B and "Diagnostic Circuit Check" in SECTION 6E2-A.
- **CHECK:** For contaminated fuel.

IGNITION SYSTEM

- **CHECK:** Ignition system for:
  - Proper ignition voltage output with J 26792 or equivalent.
  - Spark plugs, wet plugs, cracks, wear, improper gap, burned electrodes or heavy deposits.
  - Moisture, dust, cracks, burns, etc.
  - Bare and shorted wires. Spray plug wires with fine water mist.
  - Loose ignition coil connections.
  - Faulty ECM and ignition grounds.
  - CMP sensor resistance and connections.

ADDITIONAL CHECKS

- **CHECK:** No crank signal, - refer to "Diagnostic Circuit Check" in SECTION 6E2-A.
- **CHECK:** IAC operation, - refer to SECTION 6E2-C2.
- **CHECK:** EGR system operation, - refer to SECTION 6E2-C7.
- **CHECK:** Service Bulletins for ECM updates.

SURGES AND/OR CHUGGLES

Definition: Engine power variation, under steady throttle or cruise. Feels like the vehicle speeds up and slows down, with no change in the accelerator pedal.

PRELIMINARY CHECKS

- Perform the careful visual/physical checks as described at start of SECTION 6E2-B.
- Be sure driver understands torque converter clutch (TCC) and A/C compressor operation in Owner's Manual.

SENSORS

- **CHECK:** Heated oxygen sensor (HO2S) for silicon contamination from fuel, or use of improper RTV sealant. The HO2S may have a white, powdery coating and result in a high but false signal voltage (rich exhaust indication). The ECM will then reduce the amount of fuel delivered to the engine, causing a severe driveability problem.

FUEL SYSTEM

- **NOTICE:** To determine if the condition is caused by a rich or lean system, the vehicle should be driven at the speed of the complaint. Using a Tech 1 to monitor HO2S voltage will help identify a problem.
  Lean - HO2S voltage below 450 mV
  Rich - HO2S voltage above 450 mV
- **CHECK:** Fuel pressure while condition exists.
- **CHECK:** In-line fuel filter. Replace if dirty or plugged.

IGNITION SYSTEM

- **CHECK:** For proper ignition output voltage using J 26792 or equivalent.
- **CHECK:** Spark plugs. Remove spark plugs, check for wet plugs, cracks, wear, improper gap, burned electrodes, or heavy deposits. Repair or replace as necessary.

ADDITIONAL CHECKS

- **CHECK:** ECM grounds for being clean, tight, and in their proper locations.
- **CHECK:** Generator output voltage, refer to SECTION 6D3.
- **CHECK:** Vacuum hoses for kinks or leaks.
- **CHECK:** For intermittent EGR at idle, refer to SECTION 6E2-C7.
- **CHECK:** TCC operation, refer to SECTION 6E2-C8.
- **CHECK:** Speedometer for correct operation (fluctuating needle, speedometer cable for restricted movement, damaged cable).

LACK OF POWER, SLUGGISH, OR SPONGY

Definition: Engine delivers less than expected power. Little or no increase in speed, when accelerator pedal is pushed down part way.

PRELIMINARY CHECKS

- Perform the careful visual/physical checks as described at start of SECTION 6E2-B.
- Compare customer's vehicle to similar unit. Make sure the customer has an actual problem.
- Remove air cleaner (ACL) and check for dirt, or for being plugged. Replace as necessary.
- **CHECK:** PCV valve system for proper operation by placing finger over inlet hole in valve end several times with the engine idling. PCV valve should snap back. If not, check PCV valve hose for blockage or deterioration and replace if necessary. If PCV valve still fails this test, replace it with the correct part number PCV valve.

FUEL SYSTEM

- **CHECK:** For contaminated fuel.
- **CHECK:** For restricted fuel filter, contaminated fuel or improper fuel pressure.

IGNITION SYSTEM

- **CHECK:** Proper ignition voltage output with J 26792 or equivalent.
- **CHECK:** Proper operation of ESA, refer to SECTION 6E2-C4.

EXHAUST SYSTEM

- **CHECK:** Exhaust system for possible restriction, refer to SECTION 6F.
  Inspect exhaust system for damaged or collapsed pipes. Inspect muffler for heat distress or possible internal failure.

ENGINE MECHANICAL

- **CHECK:** Engine compression. Refer to SECTION 6.
- **CHECK:** Engine valve timing. Refer to SECTION 6.
- **CHECK:** Engine for proper or worn camshaft. Refer to SECTION 6.

ADDITIONAL CHECKS

- **CHECK:** ECM grounds for being clean, tight, and in their proper locations.
- **CHECK:** EGR system operation for being open or partly open, all the time, refer to SECTION 6E2-C7.
- **CHECK:** Torque converter clutch (TCC) operation, refer to SECTION 6E2-C8.
- **CHECK:** A/C operation.
- **CHECK:** Generator output voltage, refer to SECTION 6D3.

DETONATION/SPARK KNOCK

(Page 1 of 2)

Definition: A mild to severe ping, usually worse under acceleration. The engine makes sharp metallic knocks that change with throttle opening.

PRELIMINARY CHECKS

- Perform the careful/physical visual checks as described at start of SECTION 6E2-B.
- Make sure the customer has an actual problem.
- Remove air cleaner (ACL) and check for dirt, or for being plugged. Replace as necessary.
- **CHECK:** PCV valve system for proper operation by placing finger over inlet hole in PCV valve end several times with the engine idling. PCV valve should snap back. If not, check PCV valve hose for blockage or deterioration and replace if necessary. If PCV valve still fails this test, replace it with the correct part number PCV valve.

COOLING SYSTEM

- **CHECK:** For obvious overheating problems, refer to SECTION 6B.
- **CHECK:** Low engine coolant.
- **CHECK:** Loose water pump belt.
- **CHECK:** Restricted air flow to radiator, or restricted water flow thru radiator.
- **CHECK:** Faulty or incorrect thermostat.
- **CHECK:** Correct coolant solution .

SENSOR

- **CHECK:** ECT sensor which has shifted in value.
  Compare ECT sensor resistance to the "Diagnostic Aids" chart on DTC 14 or DTC 15 chart.

DETONATION/SPARK KNOCK

(Page 2 of 2)

Definition: A mild to severe ping, usually worse under acceleration. The engine makes sharp metallic knocks that change with throttle opening.

FUEL SYSTEM

- **NOTICE:** To determine if the condition is caused by a rich or lean system, the vehicle should be driven at the speed of the complaint. Monitoring HO2S voltage using Tech 1 will help identify the problem.
  Lean - HO2S voltage below 450 mV
  Rich - HO2S voltage above 450 mV
- **CHECK:** Fuel pressure, refer to chart A-7B and "Diagnostic Circuit Check" in SECTION 6E2-A.
- **CHECK:** For poor fuel quality, proper octane rating.
- **NOTICE:** If HO2S voltage readings are normal and there are no engine mechanical faults, fill fuel tank with a premium gasoline that has a minimum octane rating of 92 and re-evaluate vehicle performance.

IGNITION SYSTEM

- **CHECK:** Ignition timing. See "Vehicle Emission Control Information" label.
- **CHECK:** Spark plugs for proper heat range.
- **CHECK:** Ignition wires for shorts or faulty insulation.
- **CHECK:** For misfiring, crossfiring or cutting out under load.

ENGINE MECHANICAL

- **CHECK:** For carbon buildup. Remove carbon with top engine cleaner. Follow instructions on can.
- **CHECK:** For incorrect basic engine parts such as cam, heads, pistons, etc.
- **CHECK:** For excessive oil entering combustion chamber.

ADDITIONAL CHECKS

- **CHECK:** EGR system operation, refer to SECTION 6E2-C7.
- **CHECK:** For proper transmission shift points, refer to SECTION 7A-11A.
- **CHECK:** Torque converter clutch (TCC) operation , refer to SECTION 6E2-C8.
- **CHECK:** For correct ECM, see Service Bulletins.

HESITATION, SAG, STUMBLE

Definition: Momentary lack of response as the accelerator is pushed down. Can occur at all car speeds. Usually most severe when first trying to make the vehicle move, as from a stop sign. May cause the engine to stall if severe enough.

PRELIMINARY CHECKS

- Perform the careful visual/physical checks as described at start of SECTION 6E2-B.

FUEL SYSTEM

- **CHECK:** TP sensor - for binding or sticking or misadjustment. Refer to SECTION 6E2-C1 for adjustment procedures.
- **CHECK:** MAP sensor response and accuracy, refer to SECTION 6E2-C1.

IGNITION SYSTEM

- **CHECK:** Spark plug wires for being faulty.
- **CHECK:** Spark plugs for being fouled.
- **CHECK:** Ignition system for moisture, dust, cracks, burns, etc.
- **CHECK:** Open ignition system ground.
- **CHECK:** Ignition timing. See "Vehicle Emission Control Information" label.

ADDITIONAL CHECKS

- **CHECK:** For correct ECM, see Service Bulletins.
- **CHECK:** Generator output voltage, refer to SECTION 6D3.
- **CHECK:** EGR valve operation, refer to SECTION 6E2-C7.

CUTS OUT, MISSES

Definition: Steady pulsation or jerking that follows engine speed, usually more pronounced as engine load increases. The exhaust has a steady spitting sound at idle or low speed.

PRELIMINARY CHECKS

- Perform the careful visual checks as described at start of SECTION 6E2-B.

IGNITION SYSTEM

- **CHECK:** For cylinder miss by:
  1. Start engine, allow engine to stabilize. Remove one spark plug wire at a time, using insulated pliers.

CAUTION: Do not perform this test for more than 2 minutes, as this may cause damage to the three way catalytic converter.

  2. If there is an rpm drop, on all cylinders (equal to within 50 rpm), go to "Rough, Unstable Or Incorrect Idle, Stalling" symptom.
  3. If there is no rpm drop on one or more cylinders, or excessive variation in drop, check for spark on the suspected cylinder(s) with J 26792 or equivalent. If no spark, refer to "Diagnostic Circuit Check" in SECTION 6E2-A. If there is spark, remove spark plug(s) in these cylinders and check for:
     - Insulation Cracks
     - Wear
     - Improper Gap
     - Burned Electrodes
     - Heavy Deposits
- **CHECK:** Spark plug wire resistance (should not exceed 30,000 ohms); also, check ignition and connections.
- **NOTICE:** If the previous checks did not find the problem:
  - Visually inspect ignition system for moisture, dust, cracks, burns, etc. With engine running, spray plug wires with fine water mist to check for shorts.

FUEL SYSTEM

- **CHECK:** Fuel pressure, refer to chart A-7B and "Diagnostic Circuit Check" in SECTION 6E2-A.
- **CHECK:** For contaminated fuel or restricted fuel filter.

ENGINE MECHANICAL

- **CHECK:** For proper valve lash adjustment. Refer to SECTION 6.
- **CHECK:** Low compression. Perform compression check. Refer to SECTION 6.
- **CHECK:** Intake and exhaust manifold passages for casting flash.

ROUGH, UNSTABLE OR INCORRECT IDLE, STALLING

(Page 1 of 2)

Definition: The engine runs unevenly at idle. If bad enough, the vehicle may shake. Also, the idle may vary in rpm (called "hunting"). Either condition may be severe enough to cause stalling. Engine idles at incorrect speed.

PRELIMINARY CHECKS

- Perform the careful visual/physical checks as described at start of SECTION 6E2-B.

SENSORS

- **CHECK:** Heated oxygen sensor (HO2S) - Inspect sensor for silicon contamination from fuel, or use of improper RTV sealant. The sensor will have a white, powdery coating, and will result in a high but false signal voltage (rich exhaust indication). The ECM will then reduce the amount of fuel delivered to the engine, causing a severe driveability problem.
- **CHECK:** TP sensor for a sticking throttle shaft or binding linkage, refer to SECTION 6E2-C1 for proper adjustment.
- **CHECK:** ECT sensor - using a digital multimeter to measure resistance, compare ECT sensor resistance with ambient temperature on a cold engine.
  - If ECT sensor resistance is greater than or less than ambient air temperature, check for high resistance in ECT sensor circuit or the sensor itself. Compare resistance value to "Diagnostic Aids" chart on DTC 14 or DTC 15 chart.
- **CHECK:** MAP sensor response and accuracy, refer to SECTION 6E2-C1.

FUEL SYSTEM

- **NOTICE:** To determine if the condition is caused by a rich or lean system, the vehicle should be driven at the speed of the complaint. Monitoring HO2S voltage will help identify problem.
  Lean - HO2S voltage below 450 mV
  Rich - HO2S voltage above 450 mV
- **CHECK:** Lean fuel injector not supplying enough fuel at idle.
- **CHECK:** For fuel in pressure regulator hose. If present, replace regulator assembly.
- **CHECK:** Evaporative Emission Control System, refer to SECTION 6E2-C3.
- **CHECK:** Perform a cylinder compression check, refer to SECTION 6.
- **CHECK:** For fuel injector leaking.

ROUGH, UNSTABLE OR INCORRECT IDLE, STALLING

(Page 2 of 2)

Definition: The engine runs unevenly at idle. If bad enough, the vehicle may shake. Also, the idle may vary in rpm (called "hunting"). Either condition may be severe enough to cause stalling. Engine idles at incorrect speed.

IGNITION SYSTEM

- **CHECK:** Ignition System, refer to SECTION 6E2-C4.
- **CHECK:** Ignition system for moisture, dust, cracks, burns, etc. Spray plug wires with a fine water mist to check for shorts.
- **CHECK:** Ignition wires for shorts or faulty insulation.

ENGINE MECHANICAL

- **CHECK:** For broken motor mounts.
- **CHECK:** For low compression, refer to SECTION 6.

ADDITIONAL CHECKS

- **CHECK:** Vacuum leaks can cause higher than normal idle.
- **CHECK:** IAC Operation, refer to SECTION 6E2-C2.
- **CHECK:** ECM grounds for clean, tight, and proper routing.
- **NOTICE:** If problem exists with A/C "ON," check A/C system operation.
- **CHECK:** EGR "ON," while idling, will cause roughness, stalling and hard starting, refer to SECTION 6E2-C7.
- **CHECK:** Battery cables and ground straps should be clean and secure.
- **CHECK:** A/C refrigerant pressure too high.
- **CHECK:** For overcharge or faulty dual pressure switch.
- **CHECK:** PCV valve for proper operation by placing finger over inlet hole in PCV valve end several times with the engine idling. PCV valve should snap back. If not, replace PCV valve.

POOR FUEL ECONOMY

Definition: Fuel economy, as measured by an actual road test, is noticeably lower than expected. Also, economy is noticeably lower than it was on this vehicle at one time, as previously shown by an actual road test.

PRELIMINARY CHECKS

- Perform the careful visual/physical checks as described at start of SECTION 6E2-B.
- Check air cleaner (ACL) for dirt or being plugged.
- Visually (physically) check: Vacuum hoses for splits, kinks, and proper connections as shown on "Vehicle Emission Control Information" label.
- Check owner's driving habits.
  - Is A/C "ON" full time (Defroster mode "ON")?
  - Are tires at correct pressure?
  - Are excessively heavy loads being carried?
  - Is acceleration too much, too often?
- **NOTICE:** Suggest owner fill fuel tank and recheck fuel economy.
  Suggest driver to read "Important Facts on Fuel Economy" in Owner's Manual.

ADDITIONAL CHECKS

- **CHECK:** Throttle opener adjustment, refer to SECTION 6E2-C2 for proper adjustment.
- **CHECK:** Torque converter clutch (TCC) operation, refer to SECTION 6E2-C8.
- **CHECK:** For proper calibration of speedometer.
- **CHECK:** For dragging brakes.

FUEL SYSTEM

- **CHECK:** Fuel pressure, refer to Chart A-7B and "Diagnostic Circuit Check" in SECTION 6E2-A.

IGNITION SYSTEM

- **CHECK:** Spark plugs. Remove spark plugs, check for wet plugs, cracks, wear, improper gap, burned electrodes, or heavy deposits. Repair or replace as necessary.
- **CHECK:** Ignition wires for cracking, hardness, and proper connections.
- **CHECK:** Proper operation of ESA system, refer to SECTION 6E2-C4.
- **CHECK:** Ignition timing. See "Vehicle Emission Control Information" label.

COOLING SYSTEM

- **CHECK:** Engine coolant level.
- **CHECK:** Engine thermostat for faulty part (always open) or for wrong heat range, refer to SECTION 6B.

EXCESSIVE EXHAUST EMISSIONS OR ODORS

Definition: Vehicle fails an emission test. Vehicle has excessive "rotten egg" smell. Excessive odors do not necessarily indicate excessive emissions.

PRELIMINARY CHECKS

- If EMISSION TEST shows excessive CO and HC, check items which cause vehicle to run RICH (HO2S voltage above 450 mV). Make sure engine is at normal operating temperature.
- If EMISSION TEST shows excessive NOx, check items which cause vehicle to run LEAN or too hot.

SENSORS

- **NOTICE:** If a Tech 1 (or equivalent) indicates a very high engine coolant temperature and the system is running LEAN, check the Cooling System and for proper operation.

FUEL SYSTEM

- **CHECK:** For proper fuel filler cap.
- **CHECK:** Fuel pressure, refer to chart A-7B and "Diagnostic Circuit Check" in SECTION 6E2-A.
- **NOTICE:** If test shows excessive NOx, check items which cause vehicle to run LEAN or too hot.
- **CHECK:** EVAP canister for proper operation, refer to SECTION 6E2-C3.

IGNITION SYSTEM

- **CHECK:** For incorrect timing or excessive advance. See "Vehicle Emission Control Information" label.
- **CHECK:** Ignition system, refer to SECTION 6E2-C4.
- **CHECK:** Spark plugs, plug wires, and ignition components, refer to SECTION 6D4.

ADDITIONAL CHECKS

- **CHECK:** For vacuum leaks.
- **CHECK:** For lead contamination of three way catalytic converter (look for the removal of fuel filler neck restrictor).
- **CHECK:** Carbon buildup. Remove carbon with top engine cleaner. Follow instructions on can.
- **CHECK:** EGR valve for not opening, refer to SECTION 6E2-C7.
- **CHECK:** PCV valve for being plugged, stuck, or blocked PCV valve hose, or fuel in the crankcase.

DIESELING, RUN-ON

Definition: Engine continues to run after the ignition switch is turned to the "OFF" position, but runs very roughly. If engine runs smoothly, check ignition switch and adjustment.

PRELIMINARY CHECKS

- Perform the careful visual/physical checks as described at start of SECTION 6E2-B.

FUEL SYSTEM

- **CHECK:** Fuel injector for leaking. Visually check fuel injector and TBI unit assembly for fuel leakage, refer to SECTION 6E2-C2.
- **CHECK:** Throttle opener adjustment, refer to SECTION 6E2-C2 for proper throttle opener adjustment.

BACKFIRE

Definition: Fuel ignites in intake manifold, or in exhaust system, making a loud popping noise.

PRELIMINARY CHECKS

- Perform the careful visual/physical checks as described at start of SECTION 6E2-B.

IGNITION SYSTEM

- **CHECK:** Proper ignition coil output voltage with J 26792 or equivalent.
- **CHECK:** Spark plugs. Remove spark plugs, check for wet plugs, cracks, wear, improper gap, burned electrodes, or heavy deposits. Repair or replace as necessary.
- **CHECK:** Ignition system, refer to SECTION 6E2-C4.
- **CHECK:** For crossfire between spark plugs (distributor cap, spark plug wires, and proper routing of plug wires), refer to SECTION 6D4.
- **CHECK:** Ignition timing. See "Vehicle Emission Control Information" label.

ENGINE MECHANICAL

- **CHECK:** Compression. Perform a compression check - look for sticking or leaking valves, refer to SECTION 6.
- **CHECK:** Valve timing and valve lash adjustment.
- **CHECK:** Intake manifold gasket for vacuum leaks.
- **CHECK:** EGR system operation for being open all the time, refer to SECTION 6E2-C7.
- **CHECK:** Intake and exhaust manifolds for casting flash.

SECTION C

COMPONENT SYSTEMS

NOTICE: When fasteners are removed, always reinstall them at the same location from which they were removed. If a fastener needs to be replaced, use the correct part number fastener for that application. If the correct part number fastener is not available, a fastener of equal size and strength (or stronger) may be used. Fasteners that are not reused, and those requiring thread-locking compound, will be called out. The correct torque values must be used when installing fasteners that require them. If the above procedures are not followed parts or system damage could result.

Section "C" provides information on the following:

- General description of components and subsystems.
- On-vehicle service.
- Part names and group numbers.
- Diagnostic charts. These include a functional check of the system as well as diagnosis of any problem found in the functional check.

For component locations, wiring diagrams, and ECM connector terminal end views, refer to SECTION 6E2-A.

Refer to the following sections for the appropriate subsystem information:

- C1 Engine Control Module (ECM) and Sensors 6E2-C1-1
- C2 Fuel Metering System 6E2-C2-1
- C3 Evaporative Emission (EVAP) Control System 6E2-C3-1
- C4 Ignition System 6E2-C4-1
- C7 Exhaust Gas Recirculation (EGR) System 6E2-C7-1
- C8 Torque Converter Clutch (TCC) System 6E2-C8-1
- C13 Positive Crankcase Ventilation (PCV) System 6E2-C13-1

DIAGNOSTIC CHARTS

- Chart C-1 Power Steering Pressure Switch Check 6E2-C1-14
- Chart C-1A Heated Oxygen Sensor (HO2S) Check 6E2-C1-16
- Chart C-2 Idle Air Control (IAC) Valve Check 6E2-C2-20
- Chart C-2A Throttle Opener and Throttle Opener Solenoid Vacuum (TO SV) Valve Check 6E2-C2-22
- Chart C-3 Evaporative Emission Solenoid Purge (EVAP SP) Valve Check 6E2-C3-6
- Chart C-7 Exhaust Gas Recirculation (EGR) System Check 6E2-C7-8
- Chart C-8 Torque Converter Clutch (TCC) Relay System Check 6E2-C8-2

SECTION C1
ENGINE CONTROL MODULE (ECM) AND SENSORS
CONTENTS

General Description 6E2-C1-1
Engine Control Module (ECM) 6E2-C1-1
Self-Diagnosis Function 6E2-C1-2
Fail-Safe Function 6E2-C1-2
Information Sensors 6E2-C1-2
Heated Oxygen Sensor (HO2S) ... 6E2-C1-2
Engine Coolant Temperature (ECT) Sensor 6E2-C1-3
Throttle Position (TP) Sensor 6E2-C1-4
Intake Air Temperature (IAT) Sensor 6E2-C1-4
Vehicle Speed Sensor (VSS) 6E2-C1-4
Manifold Absolute Pressure (MAP) Sensor 6E2-C1-4
Exhaust Gas Recirculation (EGR) Temperature Sensor (California) 6E2-C1-4
Inputs/Signals 6E2-C1-5
Crank Signal 6E2-C1-5
"P"/"N" Signal 6E2-C1-5
Ignition Signal 6E2-C1-5
A/C Idle-Up Signal 6E2-C1-5
Power Steering Pressure (PSP) Switch 6E2-C1-5
Diagnosis 6E2-C1-5
Precautions in Diagnosing Faults in Throttle Body Fuel Injection (TBI) System 6E2-C1-5
Precautions in Identifying Diagnostic Trouble Codes (DTCs) 6E2-C1-5
Notes on System Circuit Inspection 6E2-C1-6
Diagnostic Request Terminal 6E2-C1-6
Test Switch Terminal 6E2-C1-6
On-Vehicle Service 6E2-C1-7
Engine Control Module (ECM) 6E2-C1-7
Heated Oxygen Sensor (HO2S) 6E2-C1-8
Engine Coolant Temperature (ECT) Sensor 6E2-C1-8
Throttle Position (TP) Sensor 6E2-C1-9
Throttle Position (TP) Sensor Check .. 6E2-C1-10
Throttle Position (TP) Sensor Adjustment 6E2-C1-11
Intake Air Temperature (IAT) Sensor 6E2-C1-11
Manifold Absolute Pressure (MAP) Sensor 6E2-C1-11
Exhaust Gas Recirculation (EGR) Temperature Sensor (California) 6E2-C1-12
Power Steering Pressure (PSP) Switch 6E2-C1-12
Specifications 6E2-C1-13
Fastener Tightening Specifications .. 6E2-C1-13
Service Parts Information 6E2-C1-13
Chart C-1 Power Steering Pressure (PSP) Switch Check 6E2-C1-14
Chart C-1A Heated Oxygen Sensor (HO2S) Check 6E2-C1-16

GENERAL DESCRIPTION

ENGINE CONTROL MODULE (ECM)
Figure C1-1

The engine control module (ECM) is precision unit consisting of a one chip microcomputer, A/D (Analog/Digital) converter and an I/O (Input/Output) unit. It is an essential part of the electronic control system, for its functions include not only such major functions as to control the fuel injector, idle air control (IAC) valve, fuel pump relay, etc., but also a self-diagnosis function and a fail-safe function as described in the following section. The ECM is installed below the instrument panel left of the steering column (Figure C1-1).

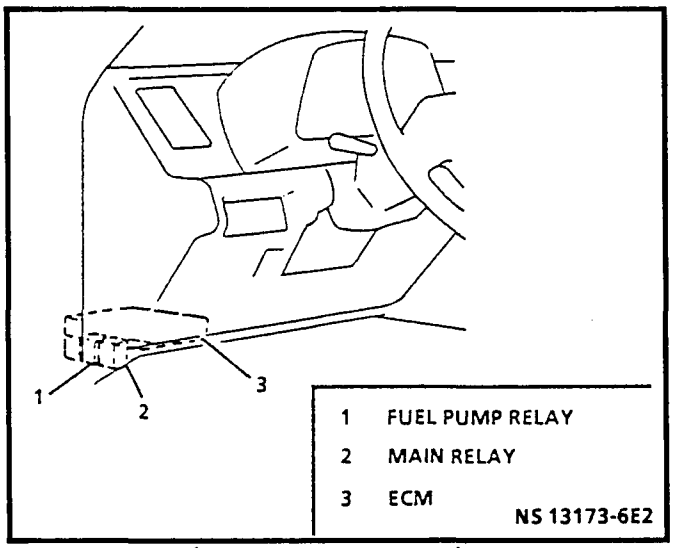

Figure C1-1 ECM Location

SELF-DIAGNOSIS FUNCTION

The engine control module (ECM) diagnoses troubles which may occur in the system when the ignition switch is in the "ON" position with the engine running. The ECM indicates a malfunction by lighting the malfunction indicator lamp (MIL) when a fault occurs in any of the following systems:

- Heated oxygen sensor (HO2S).
- Engine coolant temperature (ECT) sensor.
- Throttle position (TP) sensor.
- Vehicle speed sensor (VSS).
- Intake air temperature (IAT) sensor.
- Manifold absolute pressure (MAP) sensor.
- Ignition signal.
- Camshaft position (CMP) sensor.
- Idle switch circuit.
- Exhaust gas recirculation (EGR) temperature sensor.
- Ground circuit.
- Central processing unit (CPU) of ECM.

The ECM and the MIL operate as follows:

The MIL lights when the ignition switch is turned to the "ON" position (engine not running) with the diagnostic request terminal not grounded, regardless of the condition of throttle body fuel injection (TBI) system. This is only to check the MIL circuit.

On vehicles equipped with Federal Emissions the MIL will light regardless of the engine status when the vehicle's mileage reaches 50,000, 80,000 and 100,000 miles. This is to alert the driver that the vehicle is in need of regular maintenance service. Once regular maintenance has been performed, the MIL cancel switch must be manually reset to shut the MIL off. The MIL cancel switch is behind the instrument panel attached next to the LH front speaker.

Once the engine is started and no faults are detected by the ECM, the MIL goes out. When the ECM detects a malfunction in one of the above areas, it lights the MIL to warn the driver of the occurrence of a fault. At the same time it stores a diagnostic trouble code (DTC) in the ECM memory. If the cause of the malfunction is no longer detected by the ECM, the MIL will go out, but the corresponding DTC will be stored in the ECM memory.

The ECM will indicate DTCs that are stored in its memory by means of flashing the MIL at the time of inspection (i.e., when diagnostic request terminal is grounded and ignition switch is turned to the "ON" position) or through the Tech 1.

Any DTCs that occur with the engine running are stored in the ECM memory even if the fault was only temporary and disappeared immediately. The ECM memory is not erased unless the power to ECM is shut "OFF" for 20 seconds or longer.

NOTICE: If a malfunction occurs in the exhaust gas recirculation (EGR) system, while the engine is running, the MIL remains lit. That is, once an EGR problem is detected, the MIL will remain lit with the engine running regardless if the trouble is present or not, until the necessary repairs have been made. Only the ignition signal circuit (DTC 41) is not stored in backup memory of the ECM. (In other words, even if the ECM has detected trouble in the ignition signal circuit, once the ignition switch is turned to "LOCK," DTC 41 will not be indicated when the diagnostic request terminal is grounded and ignition switch is turned "ON.") Therefore, to check for DTCs when the engine fails to start, crank the engine and then ground the diagnostic request terminal with ignition switch in the "ON" position.

FAIL-SAFE FUNCTION

When a malfunction occurs within the throttle body fuel injection (TBI) system, the engine control module (ECM) maintains control over the fuel injector, idle air control (IAC) valve etc., on the basis of the calculated signals and/or backup program prestored within the ECM.

This function is called the "fail-safe function." Thus, with this function, a certain level of engine performance is available even when a failure occurs, thus avoiding complete disability in engine performance.

The systems covered are as follows:

- Engine coolant temperature (ECT) sensor.
- Throttle position (TP) sensor.
- Intake air temperature (IAT) sensor.
- Vehicle speed sensor (VSS).
- Manifold absolute pressure (MAP) sensor.
- Central processing unit (CPU) in ECM.

INFORMATION SENSORS
Figures C1-2 through C1-8

Heated Oxygen Sensor (HO2S)
Figures C1-2 and C1-3

The heated oxygen sensor (HO2S) is located in the exhaust manifold and detects the concentration of oxygen in the exhaust gases. It consists of the zirconia element (with thin platinum surface coating) which generates electromotive force, a lead wire which draws out the electromotive force and cover and housing which protect the zirconia element from damage. The HO2S also incorporates a heater element. Refer to "Chart C-1A Heated Oxygen Sensor (HO2S) Check" later in this section to check that HO2S heater is working properly (Figure C1-2).

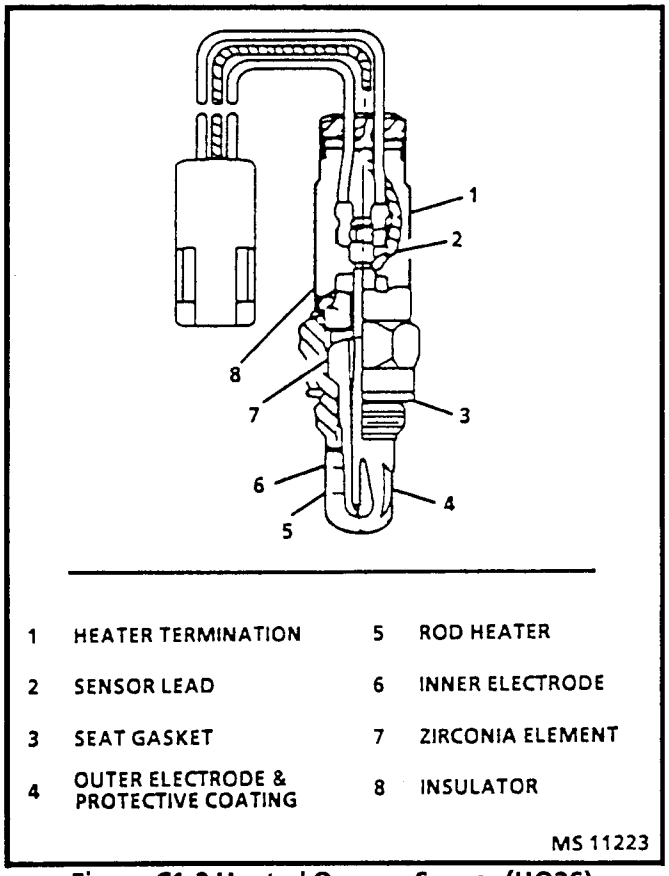

Figure C1-2 Heated Oxygen Sensor (HO2S)

The zirconia element, by its property, generates the electromotive force when a difference in oxygen concentration exists between its faces. As its temperature rises, the change of the electromotive force is amplified by catalytic reaction of the platinum. The HO2S makes use of this property. As atmosphere is introduced into the HO2S, the inside of the zirconia element is exposed to the atmosphere and outside to exhaust gases. Thus, the difference in concentration between the inside and the outside of the zirconia element varies with the oxygen concentration in the exhaust gases.

A large concentration difference results in about 1 volt of the electromotive force and small difference results in about 0.01 volt. To put it in other words, if the amount of oxygen in the exhaust gases is less (air-fuel mixture is richer than the stoichiometric mixture), about 1 volt of electromotive force is generated and if more (air-fuel mixture is leaner than stoichiometric mixture), almost none is generated (Figure C1-3). In this way, the HO2S detects whether the oxygen concentration is high or low (or the mixture is leaner or richer than the stoichiometric mixture).

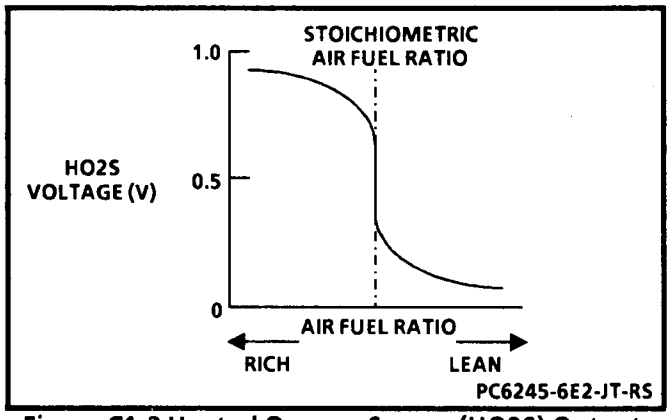

Figure C1-3 Heated Oxygen Sensor (HO2S) Output Characteristics

Engine Coolant Temperature (ECT) Sensor *Figure C1-4*

The engine coolant temperature (ECT) sensor is a thermistor (a variable resistor that changes along with temperature changes) in series with a fixed resistor in the engine control module (ECM) that measures the temperature of the engine coolant. The ECM applies 5 volts to the ECT sensor. The ECM monitors the voltage across the ECT sensor and converts it into a temperature reading. When the engine is cold the ECT sensor resistance is high, and when the engine temperature is warm the ECT sensor resistance is low. Therefore, when the engine is cold the ECM will receive a high voltage input, and when the engine is warm the ECM will receive a low voltage input. The ECT sensor is located on the RH side of the intake manifold (Figure C1-4).

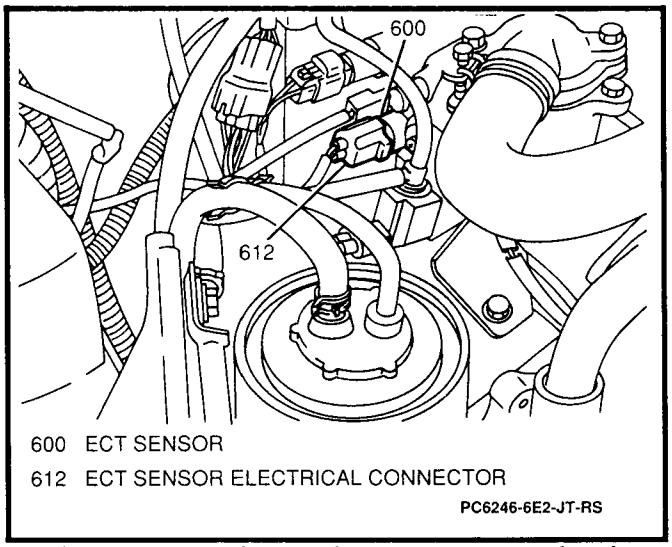

Figure C1-4 Engine Coolant Temperature (ECT) Sensor

Throttle Position (TP) Sensor
Figure C1-5

The throttle position (TP) sensor, consisting of a contact point (idle switch) and a potentiometer, is connected to the throttle valve shaft on the throttle body fuel injection (TBI) unit, and detects the throttle valve opening.

The throttle opening in the idle state is detected by means of the contact point which turns "ON" in that state. But beyond that, the full opening is detected by the potentiometer as follows.

A 5 volt reference voltage is applied to the sensor from the engine control module (ECM), and, as its brush moves over the resistance according to the throttle valve opening, the output voltage varies accordingly.

By monitoring the "ON/OFF" signal and sensor output voltage, the ECM detects the throttle valve opening.

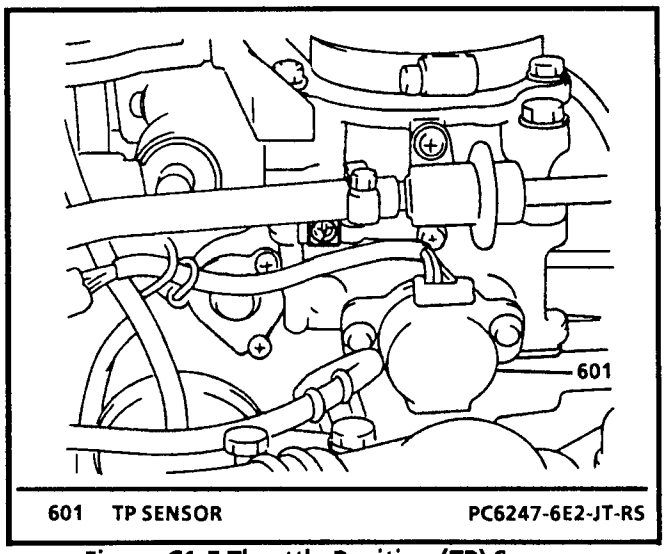

Figure C1-5 Throttle Position (TP) Sensor

Intake Air Temperature (IAT) Sensor
Figure C1-6

The intake air temperature (IAT) sensor is a thermistor (a variable resistor that changes along with temperature changes) in series with a fixed resistor within the engine control module (ECM), that measures the temperature of the air entering the intake manifold. The ECM applies 5 volts to the sensor. The ECM monitors the voltage across the IAT sensor and converts it into a temperature reading. When the outside air temperature is cold, the IAT sensor resistance is high, and when the outside air temperature is warm, the IAT sensor resistance is low. Therefore, when the air temperature is cold the ECM will receive a high voltage input, and when the air temperature is warm the ECM will receive a low voltage input. The IAT sensor is located on the right side of the intake manifold (Figure C1-6).

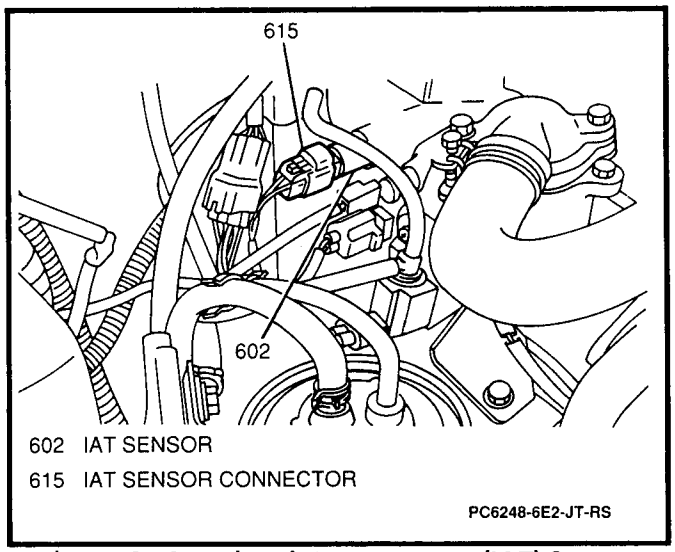

Figure C1-6 Intake Air Temperature (IAT) Sensor

Vehicle Speed Sensor (VSS)

The vehicle speed sensor (VSS) consists of a reed switch built into the speedometer head. As the speedometer cable turns, the reed switch closes the circuit ground four times per revolution. As vehicle speed increases, the frequency of ground pulses received by the ECM also increases. Therefore, by calculating the frequency of the ground pulses, the ECM is capable of determining vehicle speed.

Manifold Absolute Pressure (MAP) Sensor
Figures C1-7 and C1-8

The manifold absolute pressure (MAP) sensor measures the change in the intake manifold pressure (vacuum). The MAP sensor consists of a semi-conductor type pressure converting element, which converts a pressure change into an electrical change, and an electronic circuit which amplifies and corrects the electrical change (Figures C1-8 and C1-9). The engine control module (ECM) applies 5 volts to the MAP sensor. The change in the pressure, that results from the engine load and rpm changes, is converted into a voltage input that is monitored by the ECM. A low voltage reading at the ECM indicates low manifold pressure, and a high voltage reading at the ECM indicates high manifold pressure.

Exhaust Gas Recirculation (EGR) Temperature Sensor (California)

This exhaust gas recirculation (EGR) temperature sensor measures the temperature of the gas which was recirculated through the EGR valve. The sensor converts a change in the exhaust gas temperature into a voltage input that is sent to the engine control module (ECM). As exhaust gas temperature lowers, resistance increases and as exhaust gas temperature rises, resistance decreases thus varying the voltage

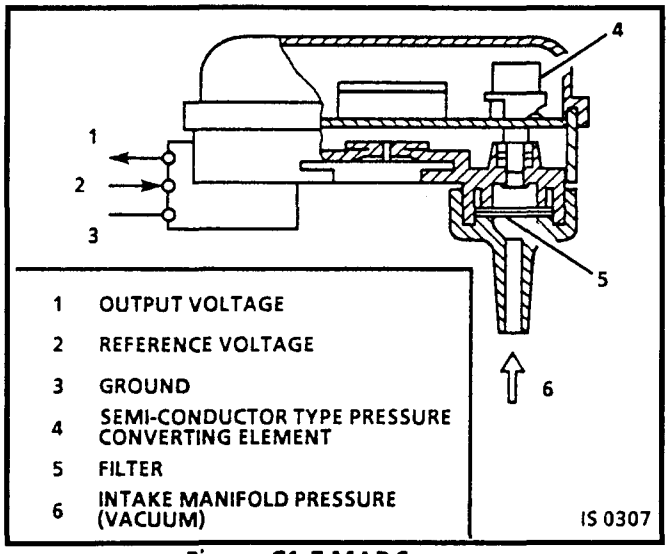

Figure C1-7 MAP Sensor

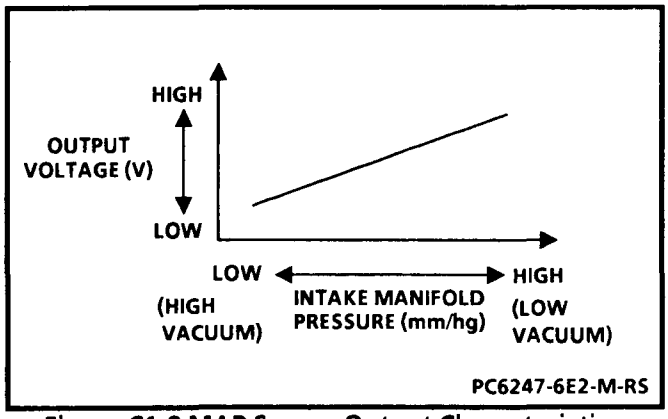

Figure C1-8 MAP Sensor Output Characteristics

input to the ECM. The EGR temperature sensor is located in the LH side of the engine compartment on the EGR valve.

INPUTS/SIGNALS

Crank Signal

This signal is sent from the engine starter circuit. Receiving it, the engine control module (ECM) detects that the engine is cranking and uses it as one of the signals to control the fuel injection timing, idle air control (IAC) valve operation and throttle opener solenoid vacuum (TO SV) valve operation.

"P"/"N" Signal

This signal is sent to the engine control module (ECM) from the park/neutral position (PNP) switch whenever the manual selector lever is in the "P" or "N" position (automatic transmission models only). The ECM uses this signal as one of the signals to control fuel injection time and idle air control (IAC) valve operation.

Ignition Signal

This signal is sent from the ignition system circuit. The engine control module (ECM) detects the status of the ignition coil through this signal and uses it as one of the factors for controlling various circuits and devices.

A/C Idle-Up Signal

This signal is sent from the A/C amplifier. When the A/C compressor clutch is energized, the A/C amplifier will pull a signal low that is in series with the A/C solenoid vacuum (SV) valve. The engine control module (ECM) uses this signal to adjust the air/fuel mixture for the lean condition the A/C SV valve creates. The vehicle's engine speed will be increased slightly to prevent stalling.

Power Steering Pressure (PSP) Switch Signal

The power steering pressure (PSP) switch signals the engine control module (ECM) when the vehicle is in need of power steering assist. The turning of the steering wheel causes increased power steering fluid pressure which will close the PSP switch. The ECM uses this signal to control the idle air control (IAC) valve to raise the idle speed before the load can cause an idle problem. The PSP switch is located in the power steering pump housing.

DIAGNOSIS

PRECAUTIONS IN DIAGNOSING FAULTS IN THROTTLE BODY FUEL INJECTION (TBI) SYSTEM

Precautions in Identifying Diagnostic Trouble Codes (DTCs)

- Do not disconnect connectors from the engine control module (ECM), battery cables, ECM ground wire harness, or the 15 amp "TAIL DOME" Fuse. Such disconnection will erase ECM diagnostic trouble codes (DTCs) in memory.
- If a malfunction lies in two or more areas, the malfunction indicator lamp (MIL) indicates applicable DTCs three times each. These DTCs will flash repeatedly as long as the diagnostic request terminal is grounded (duty check data link connector [DLC] is grounded) and ignition switch is in the "ON" position.
- Note DTC indicated first.

- Intermittent troubles – There are cases where the MIL indicates a DTC representing a fault which occurred only temporarily and has gone away. In such a case, it may occur that good parts are replaced unnecessarily. To prevent such an error, be sure to follow instructions given below when checking by using the "Diagnostic Charts."

When trouble can be identified, that is, it is not an intermittent one:

- Check sensor (actuator), wires and each connection and if they are all in good condition.

When a fault cannot be identified, but the MIL indicates a DTC:

- Diagnose fault by using that DTC number and if sensor (actuator), wires and each connection are all in good condition, erase DTC in ECM memory. Then conduct a test run and check what the MIL indicates. Only when it indicates a DTC again, is the fault present.
  If it does not indicate a DTC, but normal DTC 12, it means that an intermittent trouble did occur and has gone away. In this case, check wires and connections carefully again.

Notes on System Circuit Inspection

- Most intermittent problems are caused by faulty electrical connections or wiring. Perform careful check of suspect circuits for:
  A. Poor mating of connector halves, or terminals not fully seated into the connector body (backed out).
  B. Improperly formed or damaged terminals. All connector terminals in problem circuit should be carefully reformed to increase contact tension.
  C. Poor terminal to wire connection.

- Never connect any tester (voltmeter, ohmmeter, etc.) to the engine control module (ECM) when its connectors are disconnected. Attempting to do so may cause damage to the ECM.
- Be sure to use a digital multimeter whose minimum resistance is more than one megaohm per volt. Any other digital multimeter should not be used because accurate measurements are not obtained. (Use J 39200 or equivalent.)
- When checking voltage at each terminal of the connector which is connected to ECM, be sure to connect negative (-) probe to body ground and, using a jumper wire connect the positive (+) probe to connector terminal being tested. Applying probes of digital multimeter improperly may cause a sensor or ECM to be shorted and damaged.

DIAGNOSTIC REQUEST TERMINAL
Figure C1-9

The diagnostic request terminal is in the duty check data link connector (DLC). The duty check DLC is located in the RH rear engine compartment near the battery (Figure C1-9). When the diagnostic request terminal is grounded, a diagnosis signal is fed to the engine control module (ECM) which then outputs a diagnostic trouble code (DTC) to the malfunction indicator lamp (MIL), and at the same time outputs the air/fuel duty to the duty check DLC.

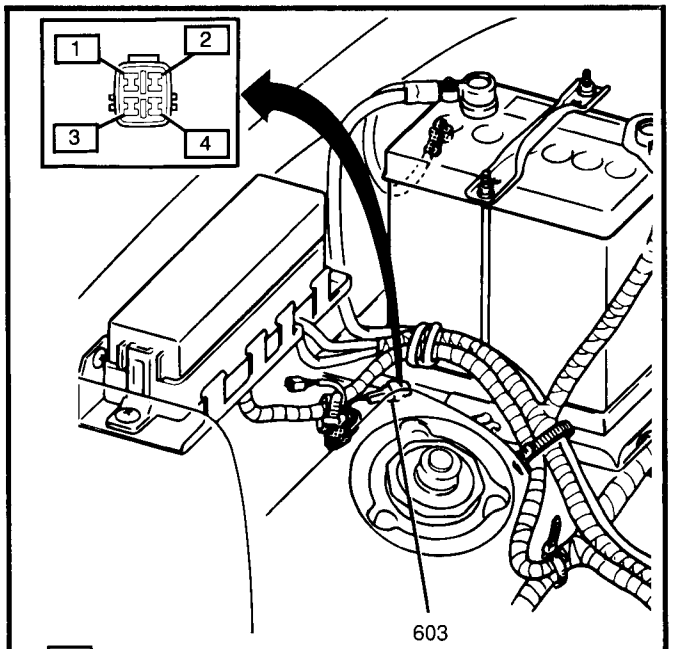

1 DUTY CHECK TERMINAL
2 DIAGNOSTIC REQUEST TERMINAL
3 GROUND TERMINAL
4 TEST SWITCH TERMINAL
603 DUTY CHECK DATA LINK CONNECTOR (DLC)
PC6003-6E-JT-RS

Figure C1-9 Duty Check Data Link Connector (DLC)

TEST SWITCH TERMINAL
Figure C1-9

The test switch terminal is included in the duty check data link connector (DLC) (Figure C1-9). When this terminal is grounded, the engine control module (ECM) sets the ignition timing to base timing.

When both the test switch terminal and the diagnostic request switch terminal are grounded simultaneously, the ECM displays any diagnostic trouble codes (DTCs) to the malfunction indicator lamp (MIL) and outputs air/fuel duty through the duty check terminal in the duty check DLC.

ON-VEHICLE SERVICE

ENGINE CONTROL MODULE (ECM)
Figures C1-10 through C1-12

Service of the engine control module (ECM) consists of complete replacement of the ECM. There are no serviceable parts, such as programmable read only memory (PROM) or erasable programmable read only memory (EPROM) to replace inside the ECM. If the ECM is determined to be faulty, it is to be replaced as a complete assembly.

Important

- When replacing the production ECM with a service ECM, it is important to transfer the broadcast code and production ECM number to the service ECM label. Please do not record on the ECM cover. This will allow positive identification of the ECM parts throughout the service life of the vehicle.

Remove or Disconnect

1. Negative (-) battery cable.
2. Two screws and left front speaker cover from I/P.
3. Two screws, left front speaker electrical connector and left front speaker from I/P (Figure C1-10).

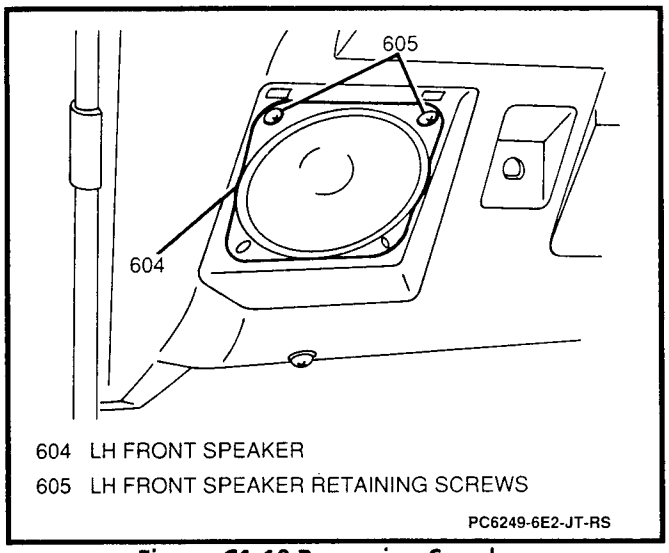

Figure C1-10 Removing Speaker

4. Two bolts and ECM bracket from I/P support brace (Figure C1-11).

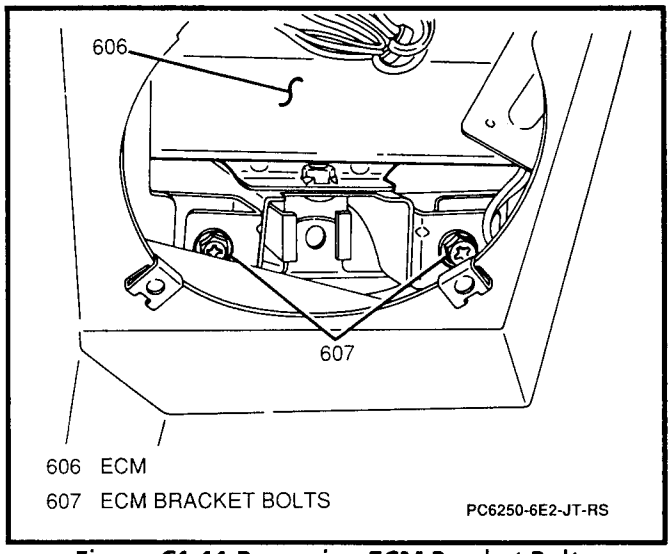

Figure C1-11 Removing ECM Bracket Bolts

5. Two screws and fuse box from ECM bracket (Figure C1-12).

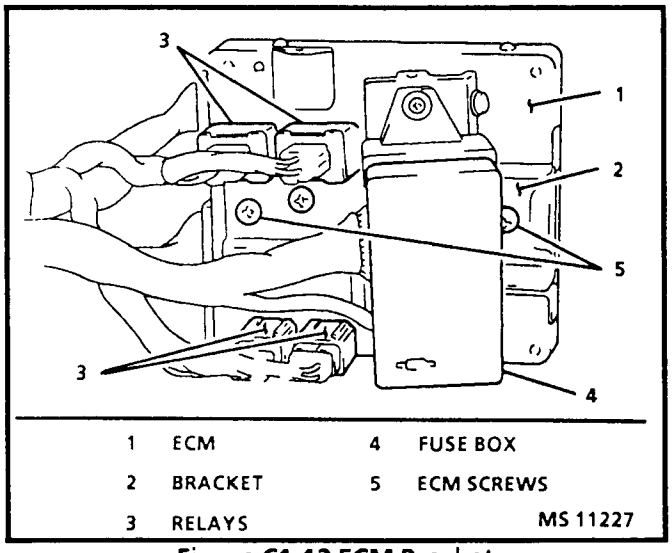

Figure C1-12 ECM Bracket

6. Two screws and ECM from ECM bracket (Figure C1-12).
7. Two ECM electrical connectors.

Install or Connect

- Transfer old plastic shield to new ECM; secure with two screws (convertible models).

1. Two ECM electrical connectors.
2. ECM to ECM bracket; secure with two screws.
3. Fuse box to ECM bracket; secure with two screws.
4. ECM bracket to I/P support brace; secure with two bolts.

Tighten

- ECM bracket-to-I/P support brace bolts to 20 N·m (15 lb.ft.).

5. Left front speaker electrical connector and left front speaker to I/P; secure with two screws.
6. Left front speaker cover to I/P; secure with two screws.
7. Negative (-) battery cable.

Tighten

- Negative (-) battery cable-to-negative (-) battery terminal retainer to 15 N·m (11 lb.ft.).

HEATED OXYGEN SENSOR (HO2S)
Figure C1-13

NOTICE: Care should be used when removing the heated oxygen sensor (HO2S), as damage could occur to the HO2S and its wires.

Important

- HO2S may be difficult to remove at temperatures below 48°C (120°F). Care should be used so as to not damage threads in exhaust manifold.

Remove or Disconnect

CAUTION: If exhaust manifold is hot, care should be exercised when removing HO2S as to not burn yourself on a hot radiator or exhaust manifold.

1. Negative (-) battery cable.
2. HO2S electrical connector (Figure C1-13).
3. Three nuts and heat shield from exhaust manifold (Figure C1-13).
4. HO2S from exhaust manifold (Figure C1-13).

Install or Connect

Important

- The HO2S comes with anti-seize coating on the new sensor. Care should be used as to not remove any of this coating.

1. HO2S to exhaust manifold.

Tighten

- HO2S to 50 N·m (37 lb.ft.).

2. Heat shield to exhaust manifold; secure with three nuts.

Tighten

- Heat shield nuts to 15 N·m (11 lb.ft.).

3. HO2S electrical connector.

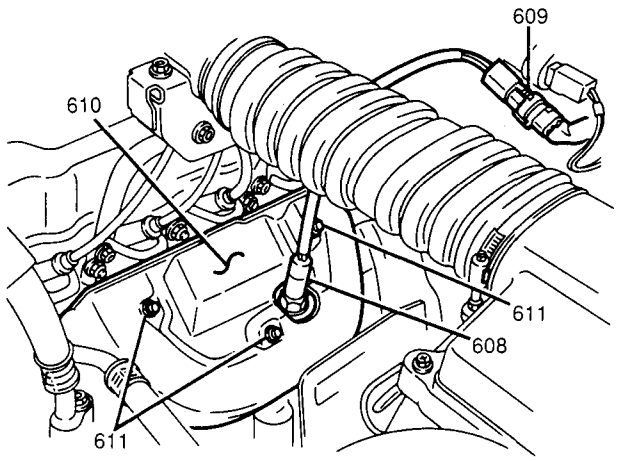

608 HO2S
609 HO2S ELECTRICAL CONNECTOR
610 HEAT SHIELD
611 HEAT SHIELD RETAINING NUTS

PC6251-6E2-JT-RS

Figure C1-13 Removing HO2S

4. Negative (-) battery cable.

Tighten

- Negative (-) battery cable-to-negative (-) battery terminal retainer to 15 N·m (11 lb.ft.).

ENGINE COOLANT TEMPERATURE (ECT) SENSOR
Figure C1-4

NOTICE: Care must be used when handling the engine coolant temperature (ECT) sensor. Damage to the ECT sensor will affect proper operation of the fuel injection system.

Remove or Disconnect

- Drain coolant system. Refer to SECTION 6B.

1. Negative (-) battery cable.
2. ECT sensor electrical connector (Figure C1-4).
3. ECT sensor from intake manifold (Figure C1-4).

Install or Connect

1. ECT sensor to intake manifold.

Tighten

- ECT sensor to 45 N·m (33 lb.ft.).

2. ECT sensor electrical connector.
3. Negative (-) battery cable.

Tighten

- Negative (-) battery cable-to-negative (-) battery terminal retainer to 15 N·m (11 lb.ft.).

- Replenish coolant system to proper level. Refer to SECTION 6B.

THROTTLE POSITION (TP) SENSOR
Figures C1-14 through C1-18

Remove or Disconnect

1. Negative (-) battery cable.
2. Throttle position (TP) sensor electrical connector (Figure C1-14).

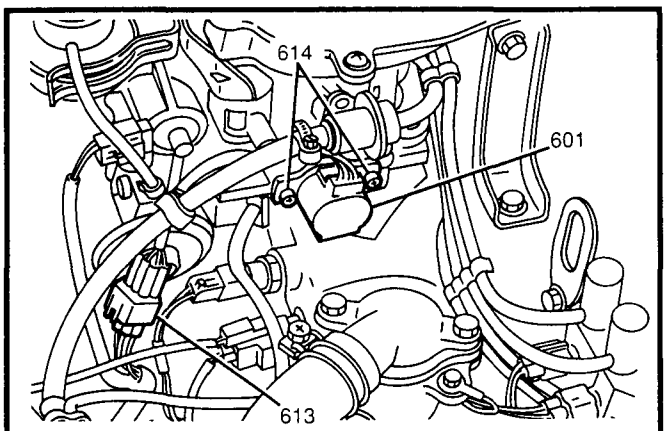

601 TP SENSOR
613 TP SENSOR ELECTRICAL CONNECTOR
614 TP SENSOR BOLTS
PC6252-6E2-JT-RS

Figure C1-14 Removing TP Sensor

3. TP sensor wiring terminals from electrical connector (TP sensor side).
4. Two bolts and TP sensor from throttle body fuel injection (TBI) unit (Figure C1-14).

Install or Connect

1. TP sensor to TBI unit; secure with two bolts. Do not tighten fully.
2. TP sensor wiring terminals into electrical connector.

- Remove throttle opener vacuum hose at throttle opener solenoid vacuum (TO SV) valve. Apply 16-20 in.Hg to the throttle opener (Figure C1-15).

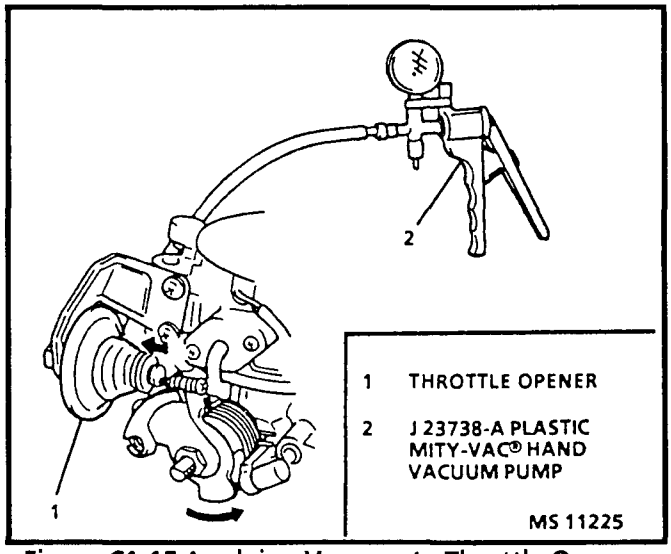

Figure C1-15 Applying Vacuum to Throttle Opener

Adjust

A. Connect a J 39200 to TP sensor connector terminal "1" to "4" (TP sensor side). Measure resistance (Figure C1-16).

NOTICE: Throttle valve must be closed.

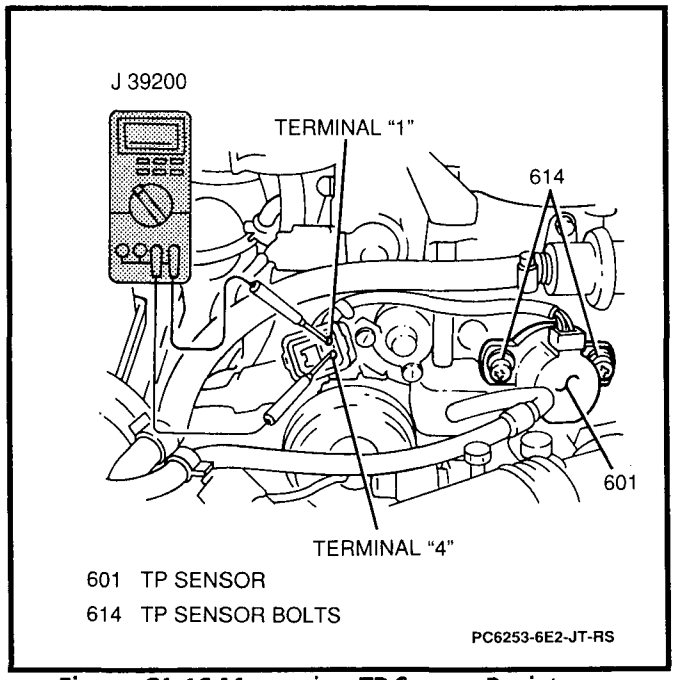

601 TP SENSOR
614 TP SENSOR BOLTS
PC6253-6E2-JT-RS

Figure C1-16 Measuring TP Sensor Resistance

B. Insert a 0.4 mm (0.016-inch) feeler gage between throttle stop screw and throttle lever and with retaining screws loosely installed, turn TP sensor fully clockwise, then slowly counterclockwise just until J 39200 indicates 12-18 ohms (Figures C1-17 and C1-18).

Tighten

- TP sensor bolts to 3.5 N·m (31 lb.in.).

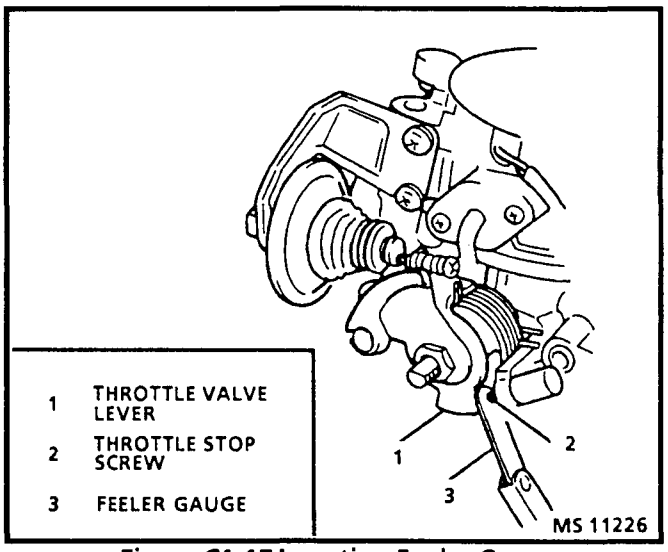

Figure C1-17 Inserting Feeler Gage

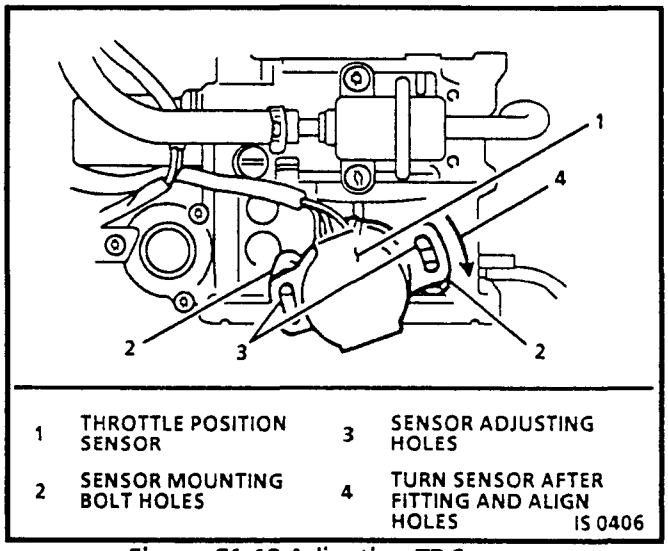

Figure C1-18 Adjusting TP Sensor

C. Remove feeler gage. J 39200 should still indicate continuity.

D. Insert 0.9 mm (0.035-inch) feeler gage between throttle stop screw and throttle lever. J 39200 should now indicate an open circuit (Figure C1-17).

3. TP sensor electrical connector.
4. Throttle opener vacuum hose to TO SV valve.
5. Negative (-) battery cable.

Tighten

- Negative (-) battery cable-to-negative (-) battery terminal retainer to 15 N·m (11 lb.ft.).

THROTTLE POSITION (TP) SENSOR CHECK
Figure C1-19

Remove or Disconnect

1. Negative (-) battery cable.
2. Throttle position (TP) sensor electrical connector.

Measure

Tool Required:
J 39200 Digital Multimeter

- TP sensor resistance according to Figure C1-19. If TP sensor resistance is not within the specified ranges, adjust/replace TP sensor. Refer to procedure in this section.

Resistance between "3" and "4" terminals (Idle switch)	When throttle lever-to-stop screw clearance is 0.3 mm (0.012 in.)	0 – 500 Ω
	When throttle lever-to-stop screw clearance is 0.56 mm (0.022 in.)	∞ (Infinite)
Resistance between "2" and "4" terminals	—	3.5 – 6.5k Ω
Resistance between "5" and "4" terminals	When throttle valve is at idle position	0.3 – 2k Ω
	When throttle valve is fully open	2 – 6.5k Ω

NOTE:
- When checking resistance at idle position, apply -50 cm/Hg vacuum to throttle opener to move throttle valve to idle position.
- There should be more than 2k Ω resistance difference between when throttle valve is at idle position and when it is fully open.

PC6254-6E2-JT-RS

Figure C1-19 Throttle Position (TP) Sensor Output Check

Install or Connect

1. TP sensor electrical connector.
2. Negative (-) battery cable.

Tighten

- Negative (-) battery cable-to-negative (-) battery terminal retainer to 15 N·m (11 lb.ft.).

THROTTLE POSITION (TP) SENSOR ADJUSTMENT
Figures C1-14 through C1-18

Remove or Disconnect

1. Negative (-) battery cable.
2. Throttle position (TP) sensor electrical connector (Figure C1-14).

- Loosen TP sensor mounting bolts.
- Remove throttle opener vacuum hose at throttle opener solenoid vacuum (TO SV) valve. Apply 16-20 in.Hg to the throttle opener (Figure C1-15).

Adjust

A. Connect a J 39200 to TP sensor connector terminal "1" to "4" (TP sensor side). Measure resistance (Figure C1-16).

NOTICE: Throttle valve must be closed.

B. Insert a 0.4 mm (0.016-inch) feeler gage between throttle stop screw and throttle lever and with retaining screws loosely installed, turn TP sensor fully clockwise, then slowly counterclockwise just until J 39200 indicates 12-18 ohms (Figures C1-17 and C1-18).

Tighten

- TP sensor bolts to 3.5 N·m (31 lb.in.).

C. Remove feeler gage. J 39200 should still indicate continuity.

D. Insert 0.9 mm (0.035-inch) feeler gage between throttle stop screw and throttle lever. J 39200 should now indicate an open circuit (Figure C1-17).

Install or Connect

1. TP sensor electrical connector.
2. Throttle opener vacuum hose to TO SV valve.
3. Negative (-) battery cable.

Tighten

- Negative (-) battery cable-to-negative (-) battery terminal retainer to 15 N·m (11 lb.ft.).

INTAKE AIR TEMPERATURE (IAT) SENSOR
Figure C1-6

Remove or Disconnect

1. Negative (-) battery cable.
2. Intake air temperature (IAT) sensor electrical connector (Figure C1-6).
3. IAT sensor from intake manifold (Figure C1-6).

Install or Connect

1. IAT sensor to intake manifold.

Tighten

- IAT sensor to 45 N·m (33 lb.ft.).

2. IAT sensor electrical connector.
3. Negative (-) battery cable.

Tighten

- Negative (-) battery cable-to-negative (-) battery terminal retainer.

MANIFOLD ABSOLUTE PRESSURE (MAP) SENSOR
Figure C1-20

Remove or Disconnect

1. Negative (-) battery cable.
2. Vacuum hose from manifold absolute pressure (MAP) sensor (Figure C1-20).

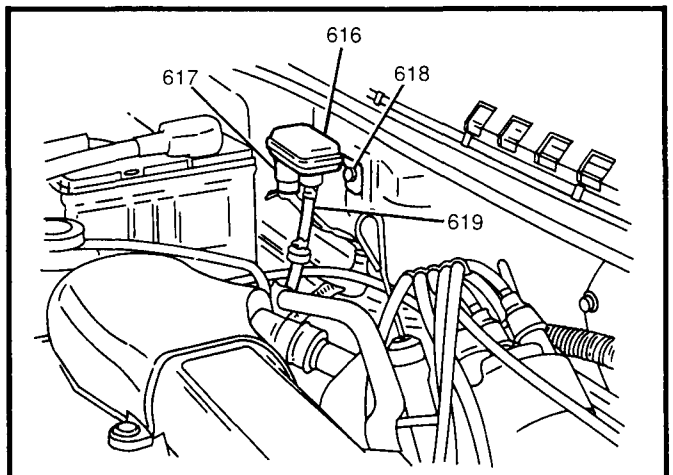

616 MAP SENSOR
617 MAP SENSOR CONNECTOR
618 MAP SENSOR BRACKET BOLT
619 MAP SENSOR VACUUM HOSE

PC6255-6E2-JT-RS

Figure C1-20 Removing MAP Sensor

3. MAP sensor electrical connector (Figure C1-20).
4. One bolt and MAP sensor and bracket from bulkhead (Figure C1-20).

Install or Connect

1. MAP sensor to bracket and bulkhead; secure with one bolt.

Tighten

- MAP sensor bracket bolt to 10 N·m (89 lb.in.).

2. MAP sensor electrical connector.
3. Vacuum hose to MAP sensor.
4. Negative (-) battery cable.

Tighten

- Negative (-) battery cable-to-negative (-) battery terminal retainer to 15 N·m (11 lb.ft.).

EXHAUST GAS RECIRCULATION (EGR) TEMPERATURE SENSOR (CALIFORNIA)

Remove or Disconnect

1. Negative (-) battery cable.
2. Exhaust gas recirculation (EGR) temperature sensor electrical connector.
3. EGR temperature sensor from EGR valve.

Install or Connect

1. EGR temperature sensor to EGR valve.

Tighten

- EGR temperature sensor to 15 N·m (11 lb.ft.).

2. EGR temperature sensor electrical connector.
3. Negative (-) battery cable.

Tighten

- Negative (-) battery cable-to-negative (-) battery terminal retainer to 15 N·m (11 lb.ft.).

POWER STEERING PRESSURE (PSP) SWITCH
Figure C1-21

Remove or Disconnect

1. Negative (-) battery cable.
2. Power steering pressure switch electrical connector.
3. PSP switch from power steering pump (Figure C1-21).

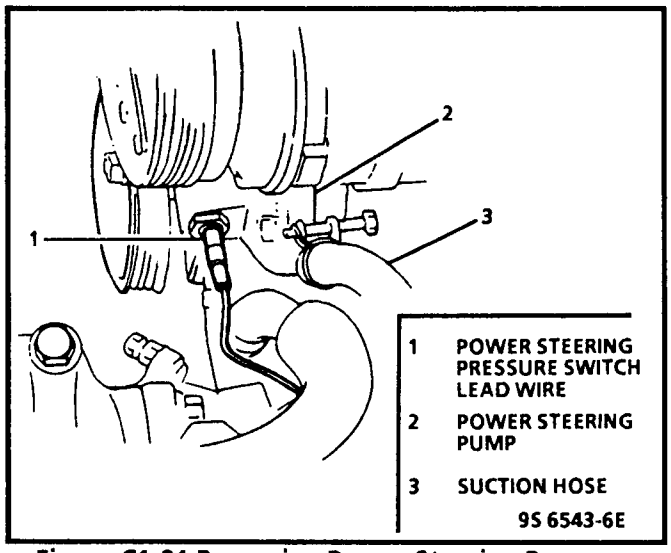

Figure C1-21 Removing Power Steering Pressure (PSP) Switch

Install or Connect

1. PSP switch to power steering pump.

Tighten

- PSP switch to 27 N·m (20 lb.ft.).

2. PSP switch electrical connector.
3. Negative (-) battery cable.

Tighten

- Negative (-) battery cable-to-negative (-) battery terminal retainer to 15 N·m (11 lb.ft.).

SPECIFICATIONS

FASTENER TIGHTENING SPECIFICATIONS

ECM-to-I/P Support Brace Bolts	20 N·m (15 lb.ft.)
Negative (-) Battery Cable-to-Negative (-) Battery Terminal Retainer	15 N·m (11 lb.ft.)
HO2S	50 N·m (37 lb.ft.)
Heat Shield Nuts	15 N·m (11 lb.ft.)
ECT Sensor	45 N·m (33 lb.ft.)
TP Sensor Bolts	3.5 N·m (31 lb.in.)
IAT Sensor	45 N·m (33 lb.ft.)
MAP Sensor Bracket Bolt	10 N·m (89 lb.in.)
EGR Temperature Sensor	15 N·m (11 lb.ft.)
PSP Switch	27 N·m (20 lb.ft.)

SERVICE PARTS INFORMATION

Component Name Used in Section 6E2-C1	Reference Name in Service Parts Catalog	Group Number
Engine Control Module (ECM)	Module, Eng Cont	3.670
Engine Coolant Temperature (ECT) Sensor	Sensor, Eng Coolant Temp	3.682
Heated Oxygen Sensor (HO2S)	Sensor, Exh Oxy	3.682
Intake Air Temperature (IAT) Sensor	Sensor, Manif Air Temp	3.320
Manifold Absolute Pressure (MAP) Sensor	Sensor, Map	3.682
Power Steering Pressure (PSP) Switch	Switch, PS Press	6.609
Throttle Position (TP) Sensor	Sensor, TBI Throt Posn	3.764

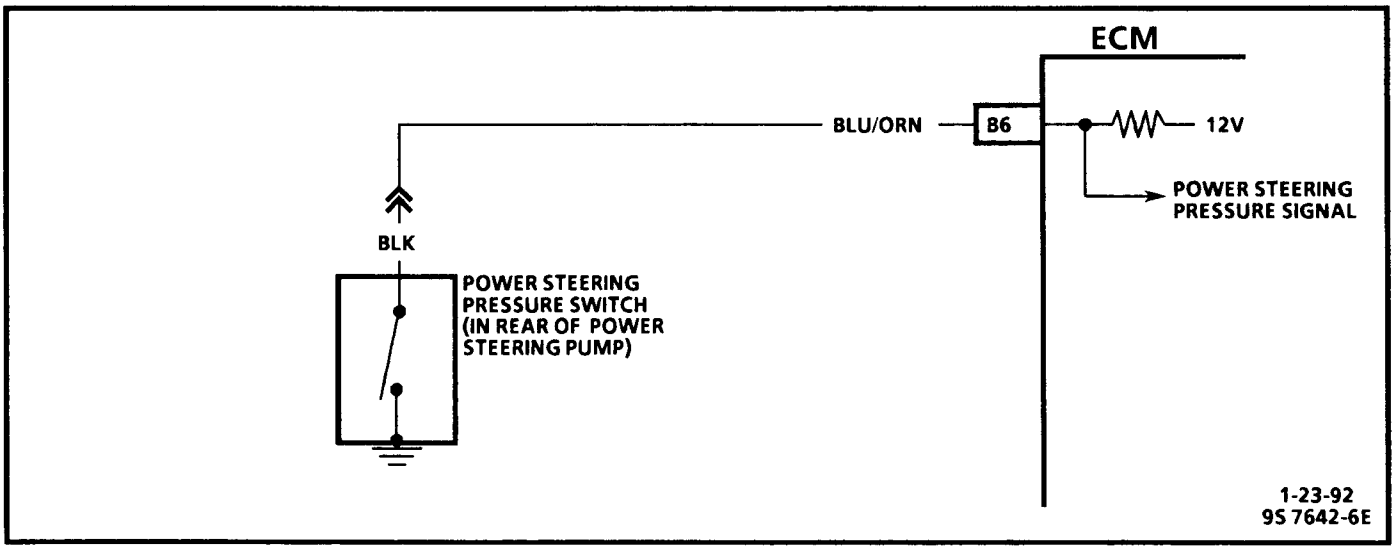

CHART C-1

POWER STEERING PRESSURE (PSP) SWITCH CHECK 1.6L (VIN U) "E/J" TRUCK

Circuit Description:

The power steering pressure (PSP) switch is normally open to ground, and the engine control module (ECM) terminal will be near battery voltage.

Turning the steering wheel increases power steering oil pressure and its load on an idling engine. The pressure switch will close before the load can cause an idle problem.

Closing the switch causes the ECM voltage signal to read less than one volt. The ECM will increase the idle air rate and prevent engine load stall.

Test Description:

Number(s) below refer to circled number(s) on the diagnostic chart.

1. Checks for ECM signal voltage and for an open or a short to ground in BLU/YEL wire.
2. Checks for a poor ground at the power steering pump and for a faulty PSP switch.

Diagnostic Aids:

A pressure switch that will not close, or loss of ground at the power steering pressure (PSP) switch may cause the engine to stop when power steering loads are high.

A switch that will not open or a signal line shorted to ground may affect idle quality.

CHART C-1

POWER STEERING PRESSURE (PSP) SWITCH CHECK 1.6L (VIN U) "E/J" TRUCK

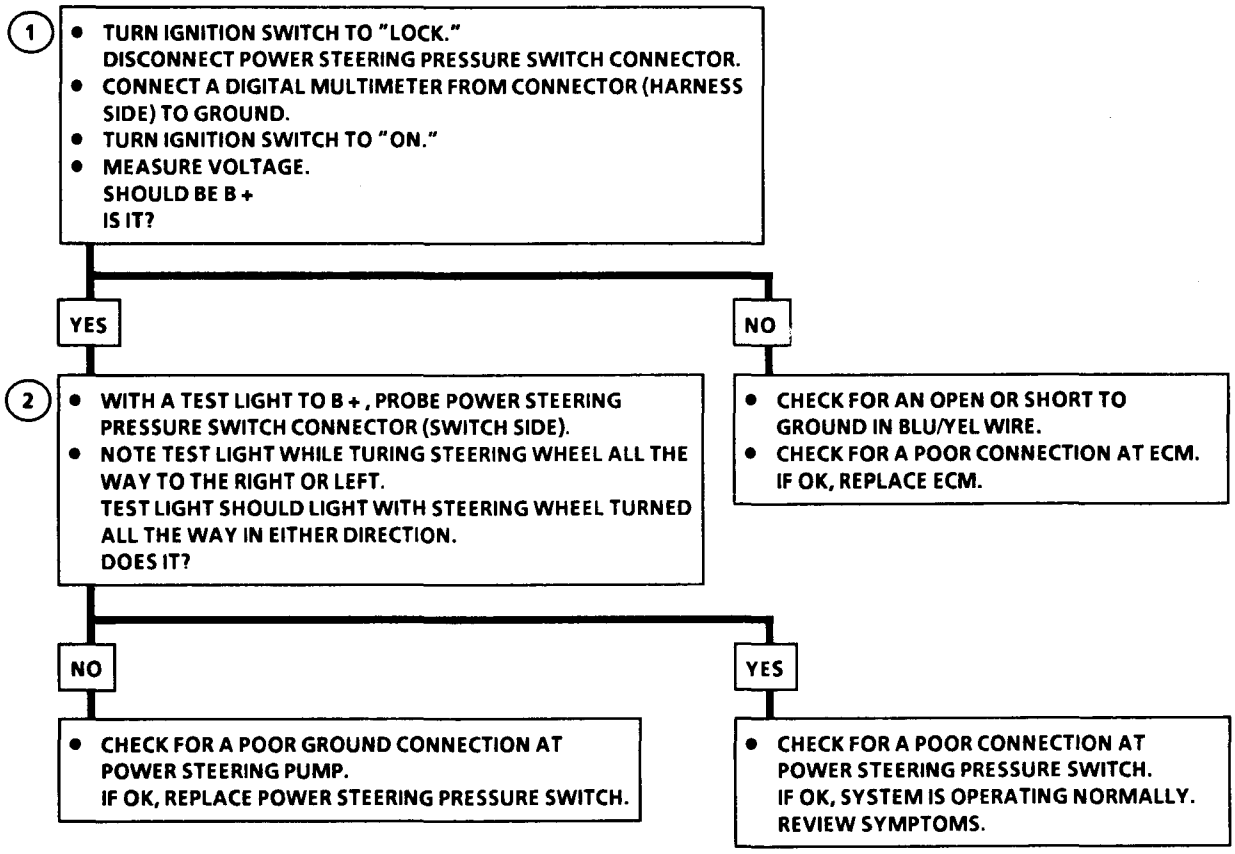

7-7-92
PC6256-6E2-JT-RS-6E

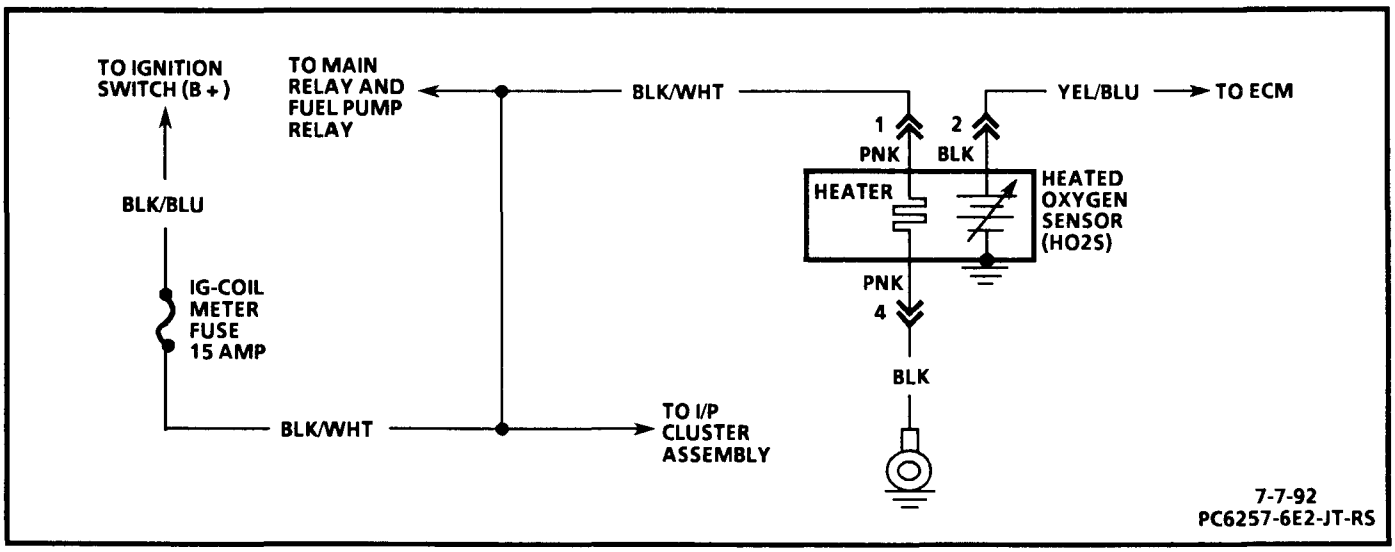

CHART C-1A

HEATED OXYGEN SENSOR (HO2S) CHECK 1.6L (VIN U) "E/J" TRUCK

Circuit Description:

The heated oxygen sensor (HO2S) has a built-in heater. This heater is operational whenever the ignition switch is turned to the "ON" position. The heater causes the HO2S to produce a voltage input to the engine control module (ECM). This allows for better fuel control during engine warm-up. No DTCs can be set if the heater portion of the HO2S fails. However, since it is part of the HO2S, it is necessary to replace the entire heated oxygen sensor if the heater is found to be faulty.

Test Description:

Number(s) below refer to circled number(s) on the diagnostic chart.

1. This checks for voltage on the BLK/WHT wire at the HO2S.
2. Checks the ground side of the circuit to the HO2S heater.
3. This will check the heater element resistance. The resistance should be 3 to 5.5 ohms at 23°C (73°F).

Diagnostic Aids:

Check for poor connection and corrosion at the HO2S connector for intermittent operation of the HO2S heater circuit.

CHART C-1A

HEATED OXYGEN SENSOR (HO2S) HEATER CHECK 1.6L (VIN U) "E/J" TRUCK

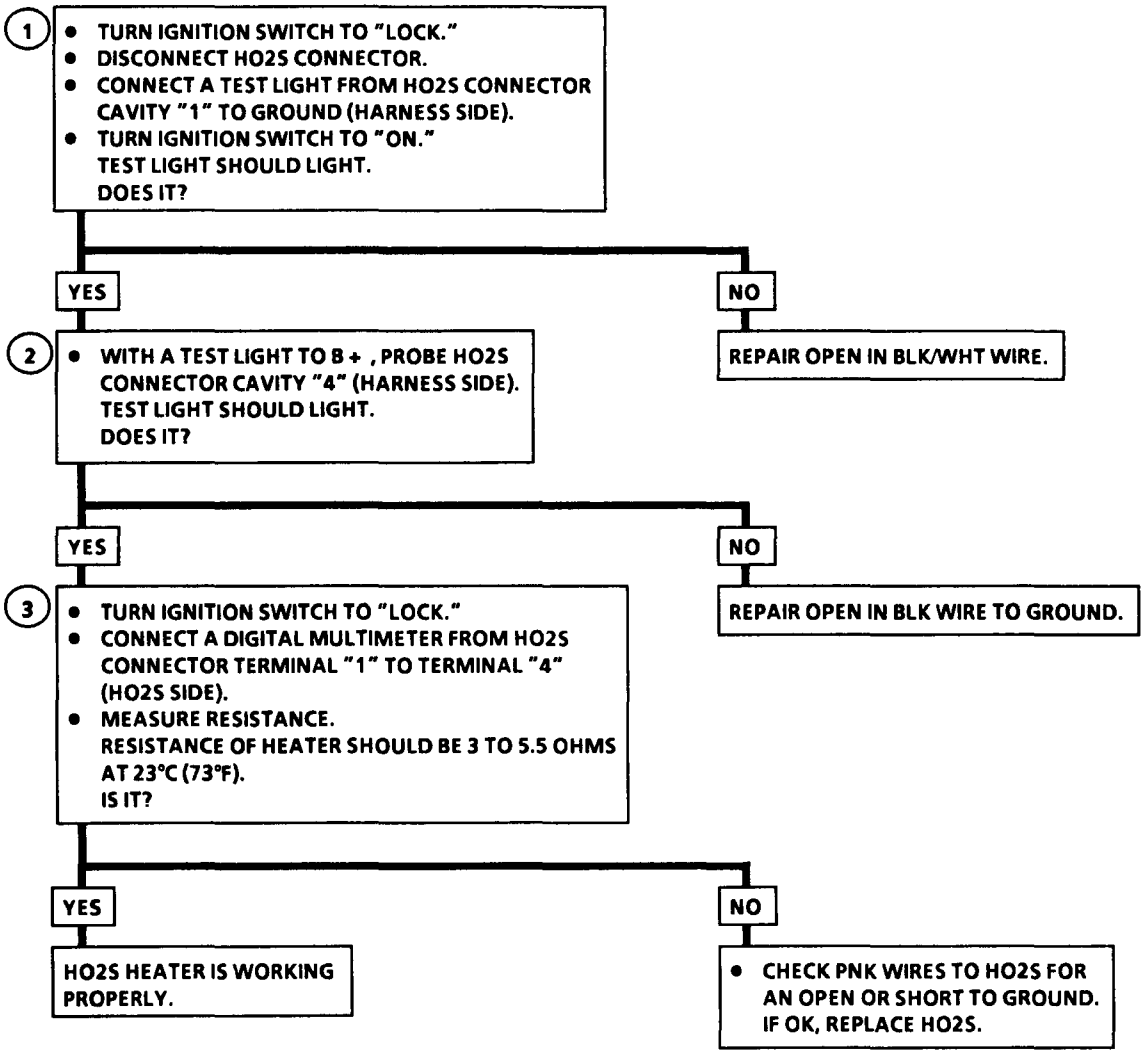

7-7-92
PC6258-6E2-JT-RS

BLANK

SECTION C2
FUEL METERING SYSTEM
CONTENTS

General Description 6E2-C2-1
Air/Fuel Delivery System 6E2-C2-1
Fuel Injection Operation 6E2-C2-2
Synchronous Injection 6E2-C2-3
Asynchronous Injection 6E2-C2-3
Engine Starting Enrichment 6E2-C2-4
Engine Warm-Up Enrichment ... 6E2-C2-4
Acceleration Enrichment 6E2-C2-4
Power Enrichment 6E2-C2-4
Deceleration Enrichment 6E2-C2-4
System Voltage Compensation ... 6E2-C2-4
Base Air/Fuel Ratio Compensation 6E2-C2-4
Barometric Pressure 6E2-C2-4
Fuel Cutoff 6E2-C2-4
Air/Fuel Ratio Feedback Compensation ("Closed Loop" Operation) 6E2-C2-4
Engine Idle Speed Control Operation 6E2-C2-5
Throttle Body Fuel Injection (TBI) Unit 6E2-C2-6
Fuel Injector 6E2-C2-7
Fuel Pressure Regulator 6E2-C2-7
Fast Idle Air Valve 6E2-C2-8
Idle Air Control (IAC) Valve 6E2-C2-8
On-Vehicle Service 6E2-C2-8
Idle Speed Adjustment 6E2-C2-8
Throttle Opener Adjustment 6E2-C2-9
Fuel Pressure Relief Procedure 6E2-C2-10
Fuel System Pressure Test 6E2-C2-10
Fuel Pump Relay 6E2-C2-11
Throttle Body Fuel Injection (TBI) (Unit Service 6E2-C2-11
Throttle Body Fuel Injection (TBI) Unit Replacement 6E2-C2-11
Fuel Injector 6E2-C2-14
Fast Idle Air Valve Check 6E2-C2-15
Fuel Pressure Regulator 6E2-C2-16
Idle Air Control (IAC) Valve 6E2-C2-17
Throttle Opener Solenoid Vacuum (TO SV) Valve 6E2-C2-17
Specifications 6E2-C2-18
Fastener Tightening Specifications .. 6E2-C2-18
Service Parts Information 6E2-C2-18
Chart C-2 Idle Air Control (IAC) Valve Check 6E2-C2-20
Chart C-2A Throttle Opener Solenoid Vacuum (TO SV) Valve Check 6E2-C2-22

GENERAL DESCRIPTION

The function of the fuel metering system is to deliver the correct amount of fuel to the engine under all operating conditions. Fuel is delivered by the throttle body fuel injection (TBI) unit, which is controlled by the engine control module (ECM) based on several important engine operation parameters. These parameters include engine speed, manifold absolute pressure (MAP), engine coolant temperature (ECT), throttle position (TP), and exhaust oxygen content.

The fuel metering system consists of the air/fuel delivery system and the electronic control system. This section covers the air/fuel delivery system. For information on the electronic control system, refer to SECTION 6E2-C1.

AIR/FUEL DELIVERY SYSTEM
Figure C2-1

The main components of this system are the fuel tank, fuel pump, fuel filter, throttle body fuel injection (TBI) unit (including the fuel injector, fuel pressure regulator and fast idle air valve), fuel feed pipe, fuel return pipe, air cleaner (ACL) and idle air control (IAC) valve.

The fuel in the fuel tank is pumped by the fuel pump, filtered by the fuel filter and fed under pressure to the fuel injector installed in the TBI unit. Fuel pressure applied to the fuel injector (the fuel pressure in the fuel feed pipe) is always kept higher than the pressure in the intake manifold by fuel pressure regulator. The fuel is injected into the TBI unit in conic dispersion when the injector opens according to the injection signal from the engine control module (ECM). The fuel pressure that is relieved by the pressure regulator is returned to the fuel tank through the fuel return pipe. The injected fuel is mixed with the air which has been filtered through the ACL in the TBI unit. The air/fuel mixture is drawn through clearance between the throttle valve and bore and idle bypass passage into the intake manifold. The intake manifold distributes the air/fuel mixture to each combustion chamber.

When the engine is cold, the air is drawn in through a fast idle air valve, bypassing the throttle valve into the intake manifold.

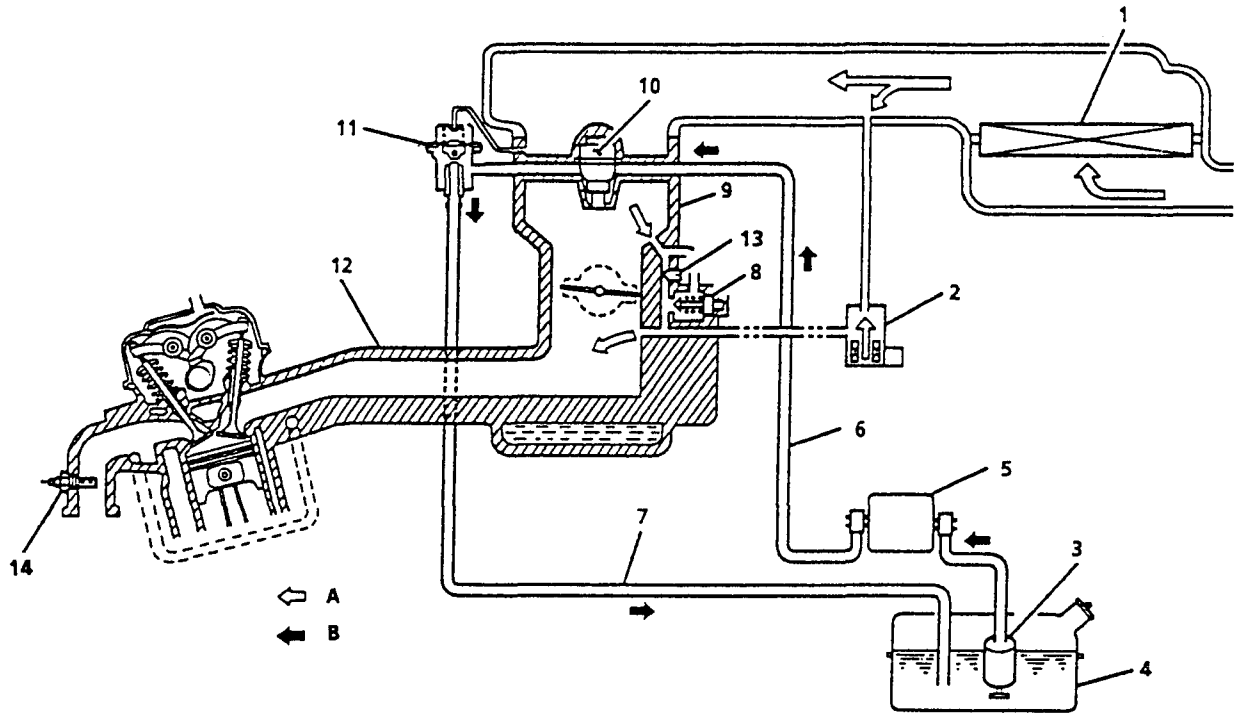

A	AIR	7	FUEL RETURN PIPE
B	FUEL	8	FAST IDLE AIR VALVE
1	AIR CLEANER (ACL)	9	THROTTLE BODY FUEL INJECTION (TBI) UNIT
2	IDLE AIR CONTROL (IAC) VALVE	10	FUEL INJECTOR
3	FUEL PUMP	11	FUEL PRESSURE REGULATOR
4	FUEL TANK	12	INTAKE MANIFOLD
5	FUEL FILTER	13	IDLE SPEED ADJUSTING SCREW
6	FUEL FEED PIPE	14	HEATED OXYGEN SENSOR (HO2S)

PC6259-6E2-JT-RS

Figure C2-1 Air and Fuel Delivery System

When the IAC valve opens according to the signal from the ECM, air is drawn through a hose bypassing the throttle valve into the intake manifold.

For the structure and operation of the fuel tank and filter, refer to SECTION 6C.

FUEL INJECTION OPERATION
Figure C2-2

In this system, the engine control module (ECM) controls the "ON" time (length of pulse) and timing of the fuel injection from the fuel injector into the throttle body fuel injection (TBI) unit according to the signals from the various sensors so that a suitable air/fuel mixture is supplied to the engine in each driving condition.

There are two types of injection timing. One is "synchronous injection" in which injection is synchronous with the ignition signal (or signal from camshaft position [CMP] sensor) and the other is "asynchronous injection" in which injection takes place independently of the ignition signal (or signal from camshaft position [CMP] sensor).

The factors to determine the injection time are the basic injection time which is calculated on the basis of the engine speed and the intake manifold pressure (amount of the intake air) and various compensations which are determined according to the signals from various sensors that detect the state of the engine and driving conditions.

Synchronous Injection
Figure C2-3

Normally, the fuel injector injects fuel at every ignition signal (or at every signal from the camshaft position [CMP] sensor). But when the engine coolant temperature (ECT) is low immediately after the engine starts, the injection time for one ignition cycle is divided into two cycles and injection takes place accordingly (Figure C2-3).

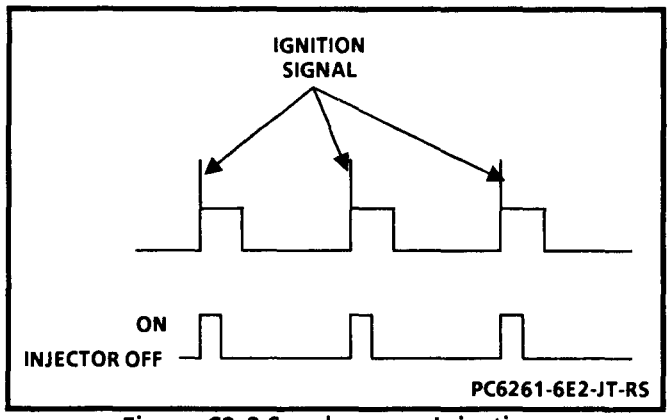

Figure C2-3 Synchronous Injection

Asynchronous Injection
Figure C2-4

When the throttle valve is opened from its idle position, the engine control module (ECM) pulses the injector to inject additional fuel in addition to synchronous injection independently of the ignition signal (or signal from the camshaft position [CMP] sensor) (Figure C2-4).

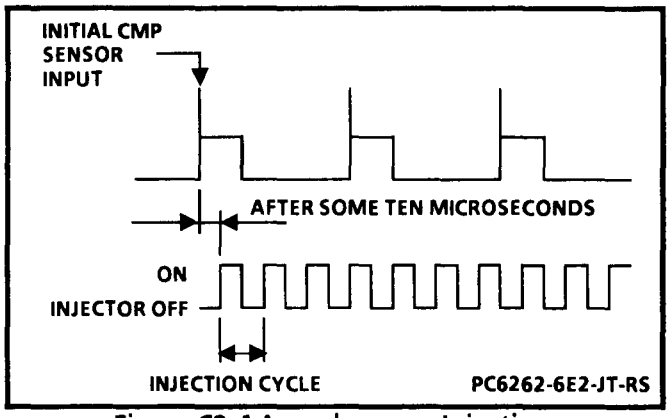

Figure C2-4 Asynchronous Injection

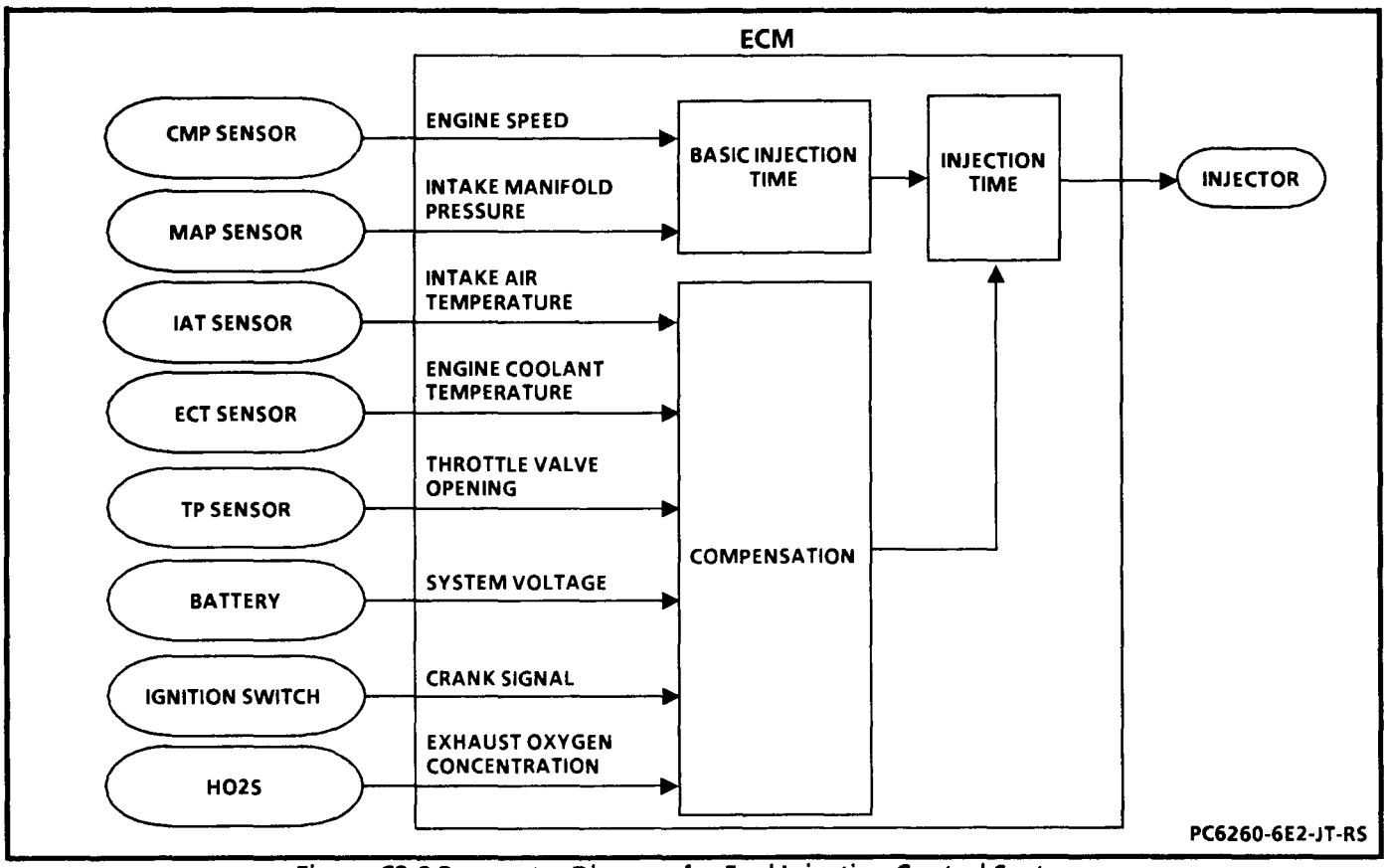

Figure C2-2 Parameter Diagram for Fuel Injection Control System

Engine Starting Enrichment

In order to improve starting performance, enriching compensation at start is carried out. For a certain time after the engine is started, air/fuel mixture is slightly enriched to stabilize the engine speed. The amount of compensation varies depending on the engine coolant temperature (ECT).

Engine Warm-Up Enrichment

When the engine is cold, additional fuel is added to ensure good driveability until the engine coolant temperature (ECT) reaches the specified level. The amount of air/fuel mixture is decreased as the ECT rises.

Acceleration Enrichment

During acceleration the fuel injector's pulse is lengthened to add more fuel. This ensures a smooth stable acceleration of the engine. The additional fuel is added based on engine coolant temperature (ECT) and manifold pressure.

Power Enrichment

To provide maximum power during high engine load driving conditions, the air/fuel mixture is made richer. This is based on the manifold absolute pressure (MAP) input, engine coolant temperature (ECT) input and throttle position (TP) input.

Deceleration Enrichment

To obtain a proper air/fuel mixture ratio during deceleration, leaning compensation is carried out when the intake manifold pressure indicates that the engine has little or no load condition.

System Voltage Compensation

A power voltage drop delays the mechanical operation of the fuel injector. The actual injection time becomes shorter for the time that electricity is supplied to the fuel injector. To compensate for this, the fuel injector pulse is lengthened.

Base Air/Fuel Ratio Compensation

The air/fuel ratio may vary due to such factors as variation in each engine itself and aging.

To compensate for such variation, feedback compensation is used and base air/fuel mixture ratio is adjusted to a proper level to maintain optimum air/fuel ratio.

Barometric Pressure

At a higher altitude where the barometric pressure is lower than at a lower altitude, compensation is made so as to adjust the air/fuel mixture ratio to compensate for less available air.

Fuel Cutoff

Fuel injection stops (with operation of the fuel injector prevented) when decelerating (i.e., when the throttle valve is at idle position and the engine speed is high), so that unburned gas will not be exhausted and injection starts again when above conditions are not met.

The fuel injection also stops when the engine speed exceeds 6,800 rpm to prevent overrun which affects the engine adversely, and it starts again when the engine speed reduces to less than 6,500 rpm.

Air/Fuel Ratio Feedback Compensation ("Closed Loop" Operation) *Figure C2-5*

It is necessary to keep the air/fuel mixture close to the theoretical air/fuel ratio (14.7:1) to obtain efficient performance of the three way catalyst and high clarification rate of CO, HC and NOx in the exhaust gas. For that purpose, the engine control module (ECM) operates as follows. First, it compares the input from the heated oxygen sensor (HO2S) with a specified reference voltage, and if the input is higher, it detects that the air/fuel ratio is richer than the theoretical air/fuel ratio and reduces fuel. If the input is lower, it detects that the air/fuel ratio is leaner and increases fuel. By repeating these operations, it adjusts the air/fuel ratio closer to the theoretical air/fuel ratio (Figure C2-5).

1. When oxygen concentration in the exhaust gas is low; that is, when the air/fuel ratio is smaller than the theoretical air/fuel ratio (fuel is richer), electromotive force of the HO2S increases and a rich signal is sent to the ECM.
2. Upon receipt of the rich signal, the ECM decreases the amount of fuel injection, which causes oxygen concentration in the exhaust gas to increase and electromotive force of the HO2S to decrease. Then a lean signal is sent to the ECM.
3. As the ECM increases the amount of fuel injection according to the lean signal, oxygen concentration in the exhaust gas decreases and the condition is back to the situation described in Step 1.

This control process, however, will not take place under any of the following conditions:

- At engine start and when fuel injection is increased after engine start.
- When engine coolant temperature (ECT) is low.
- When highly loaded and fuel injection is increased.
- At fuel cutoff.
- When HO2S is cold ("open loop" operation).
- When engine is running at high speed (higher than about 4,000 rpm).

ENGINE IDLE SPEED CONTROL OPERATION

Engine idle speed is controlled by the engine control module (ECM) through the idle air control (IAC) valve and the throttle opener solenoid vacuum (TO SV) valve which allows more/less air to bypass the throttle valve. The reasons for idle speed control:

1. To keep the engine idle speed as specified at all times. The engine idle speed can vary due to the following reasons:
   A. Load applied to engine (when electric load is applied, A/C is turned "ON," headlights "ON," stop lights, etc.).
   B. Variation in atmospheric pressure.
   C. Change in engine itself with passing of time.
   D. Other factors causing idle speed to change.
2. To improve starting performance of engine.
3. To compensate air/fuel mixture ratio when decelerating (dash-pot effect).

The TO SV valve is opened at engine start-up to enhance the idle quality. The TO SV valve will remain open while the engine is cranking and also for a short period (0.2 to 35 seconds, depending upon engine coolant temperature [ECT]) after the engine starts.

The IAC valve opens the bypass air passage when it is energized by the ECM and closes it when de-energized.

The ECM detects the engine condition by using inputs and signals from various sensors and switches and while repeating "ON" and "OFF" cycle of the IAC valve at a certain rate (12 times a second), it controls bypass air flow by increasing and decreasing its "ON" time within a cycle.

When the accelerator pedal is depressed (throttle valve is at other than idle), the ECM keeps the IAC valve "ON." When decelerating, on the other hand, it reduces its "ON" time gradually (thereby reducing the bypass air flow gradually) to adjust air/fuel mixture to an optimum ratio for combustion.

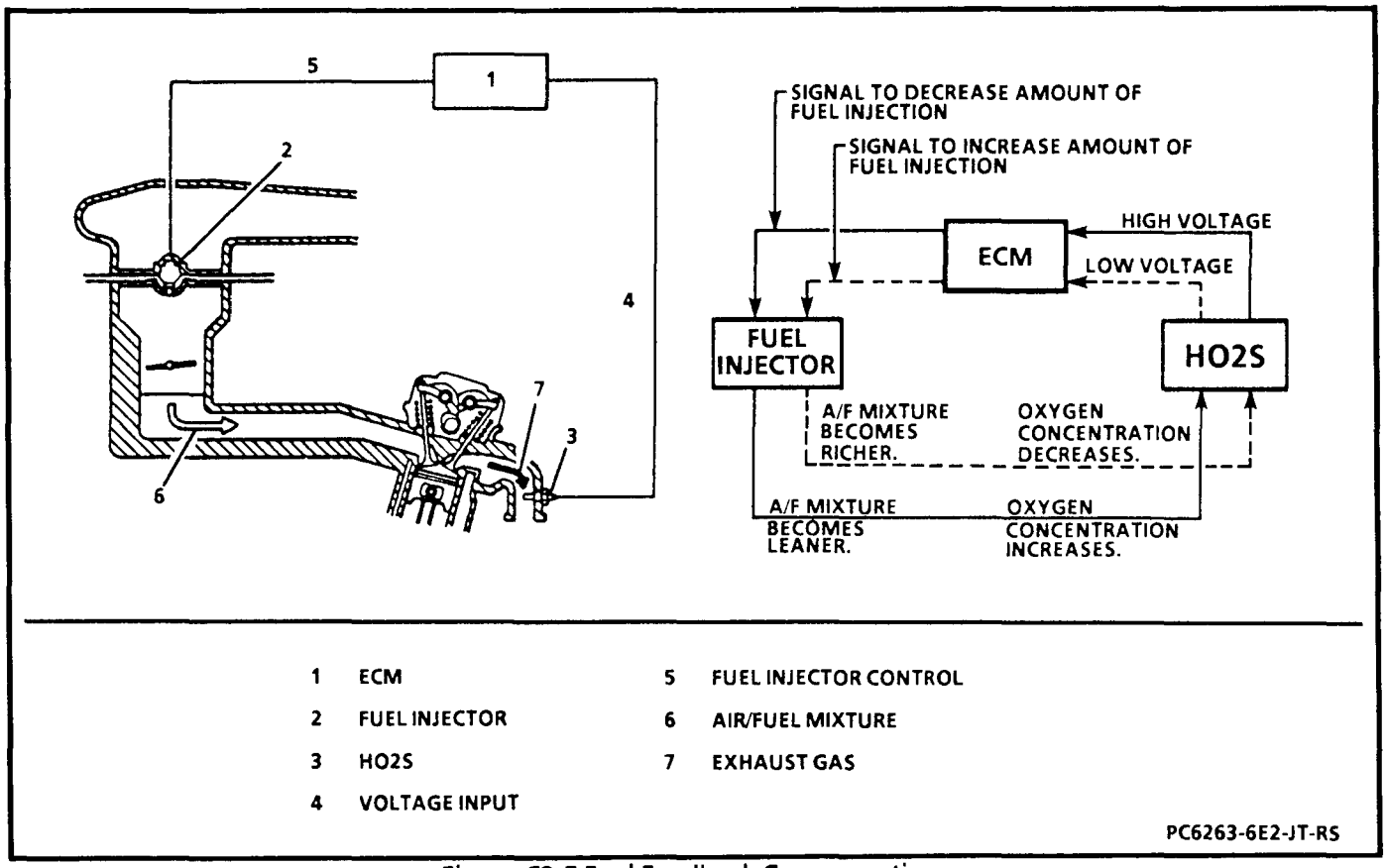

Figure C2-5 Fuel Feedback Compensation

When the vehicle is at a stop and the throttle valve is at the idle position (engine running), the ECM controls the bypass air flow by increasing or decreasing "ON" time of the IAC valve so that the engine speed is kept at a specified idle speed.

When the A/C is "ON" (if equipped), a small amount of the bypass air is supplied by the IAC valve bypass air circuit. This bypass air is used for fine control of engine idle speed with the A/C operating.

THROTTLE BODY FUEL INJECTION (TBI) UNIT
Figure C2-6

The throttle body fuel injection (TBI) unit consists of the main bore, air and/or fuel passage, vacuum passage (for manifold absolute pressure [MAP] sensor, evaporative emission [EVAP] control system and exhaust gas recirculation [EGR] system), air induction passage and the following parts.

- Fuel injector which injects fuel according to the signal from the engine control module (ECM).
- Fuel pressure regulator which maintains the fuel pressure to the fuel injector a certain amount higher than the pressure in the intake manifold.
- Throttle valve which is interlocked with the accelerator pedal and controls the amount of air/fuel mixture drawn into the combustion chamber.
- Fast idle air valve which supplies the bypass air when the engine is cold.
- Idle speed adjusting screw which controls the amount of bypass air to adjust engine idle speed.
- Throttle position (TP) sensor which detects the throttle valve opening and sends a signal to the ECM.
- Throttle opener which controls the throttle valve opening so that it is a little wider when the engine is starting than when the engine is running at idle.

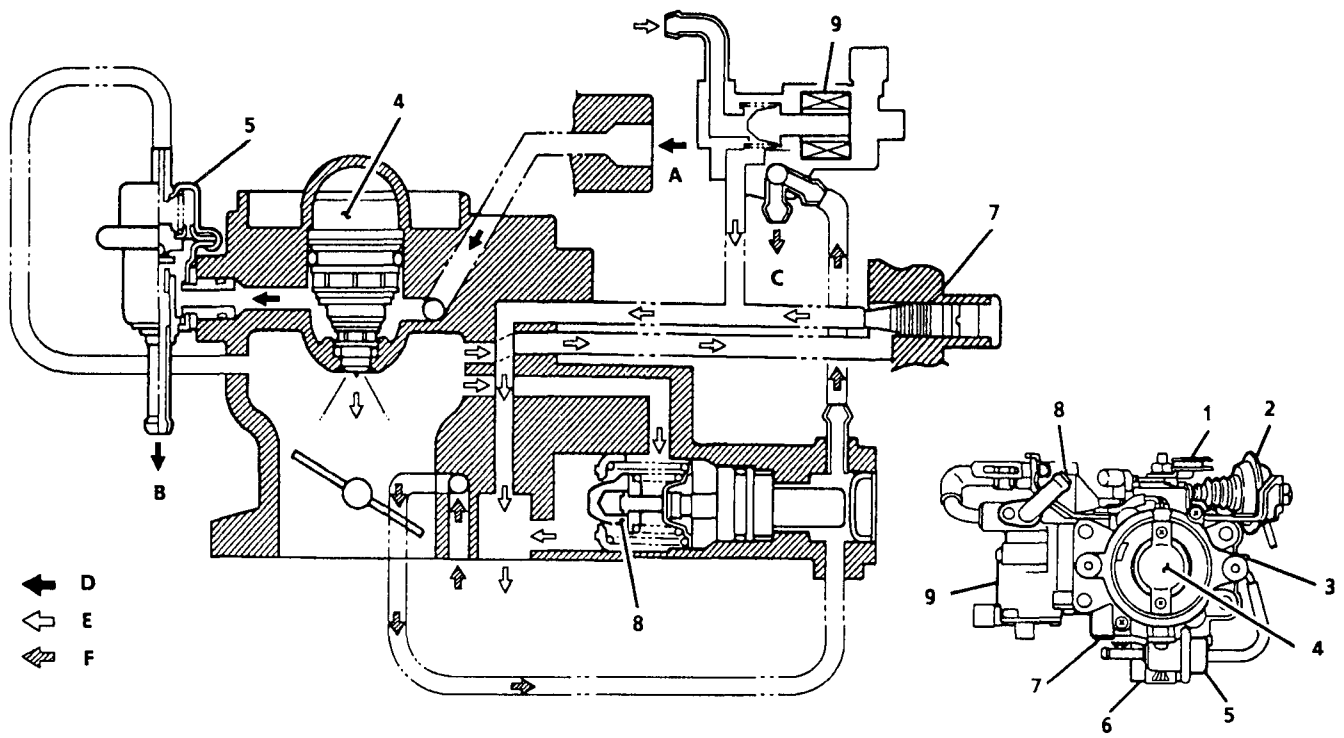

A	FROM FUEL PUMP	3	VACUUM PIPE
B	TO FUEL TANK	4	FUEL INJECTOR
C	TO INTAKE PIPE	5	FUEL PRESSURE REGULATOR
D	FUEL	6	THROTTLE POSITION (TP) SENSOR
E	AIR	7	IDLE SPEED ADJUSTING SCREW (BYPASS AIR ADJUSTING SCREW)
F	ENGINE COOLANT	8	FAST IDLE AIR VALVE
1	THROTTLE LEVER	9	IAC VALVE
2	THROTTLE OPENER		

PC6264-6E2-JT-RS

Figure C2-6 Throttle Body Fuel Injection (TBI) Unit

Fuel Injector
Figure C2-7

The fuel injector is an electromagnetic type injection nozzle which injects fuel in throttle body fuel injection (TBI) unit bore according to the signal from the engine control module (ECM) (Figure C2-7).

When the solenoid coil of the fuel injector is energized by the ECM, it becomes an electromagnet and attracts to the plunger. At the same time, the needle valve which is incorporated with the plunger opens and the fuel injector, which is under the fuel pressure, injects fuel in conic dispersion. As the stroke of the needle valve of the fuel injector is set constant, the amount of fuel injected at one time is determined by the length of time during which the solenoid coil is energized (injection time).

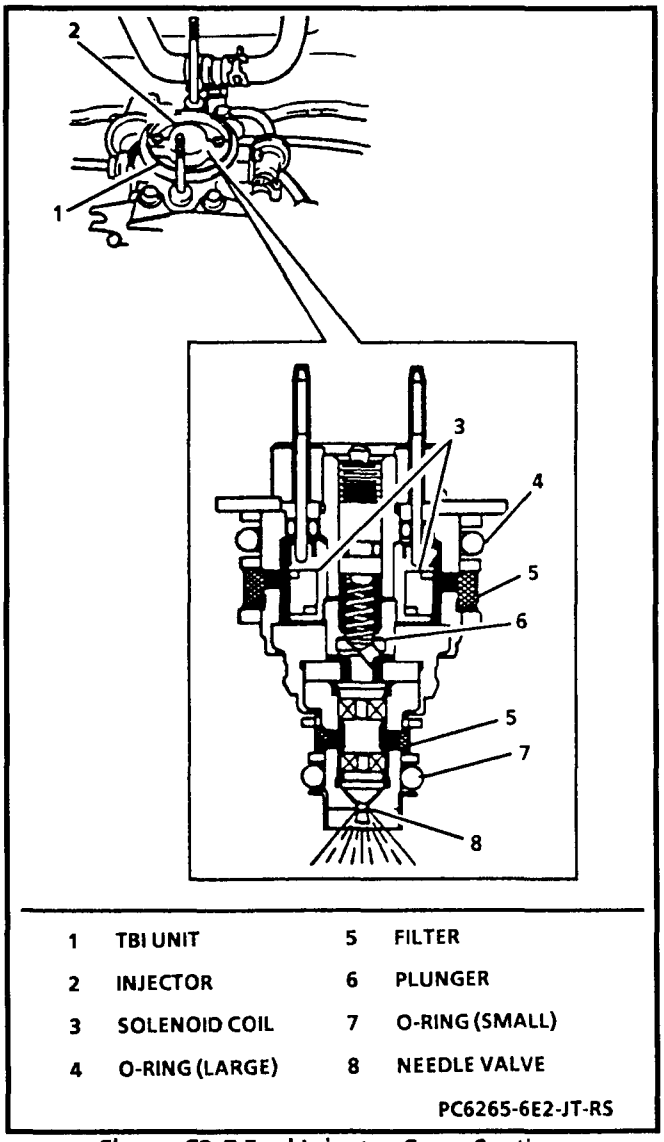

Figure C2-7 Fuel Injector Cross Section

Fuel Pressure Regulator
Figure C2-8

The fuel pressure regulator is diaphragm-operated relief valve consisting of diaphragm, spring and valve. It keeps the fuel pressure applied to the fuel injector 265 kPa (40 psi) higher than that in the throttle body fuel injection (TBI) unit at all times.

The pressure applied to the chamber "A" of fuel pressure regulator is intake manifold pressure and that to the chamber "B" is fuel pressure (Figure C2-8). When the fuel pressure rises more than 265 kPa (40 psi) higher than the TBI unit pressure, the fuel pushes the valve in the regulator open and excess fuel returns to the fuel tank via the return pipe.

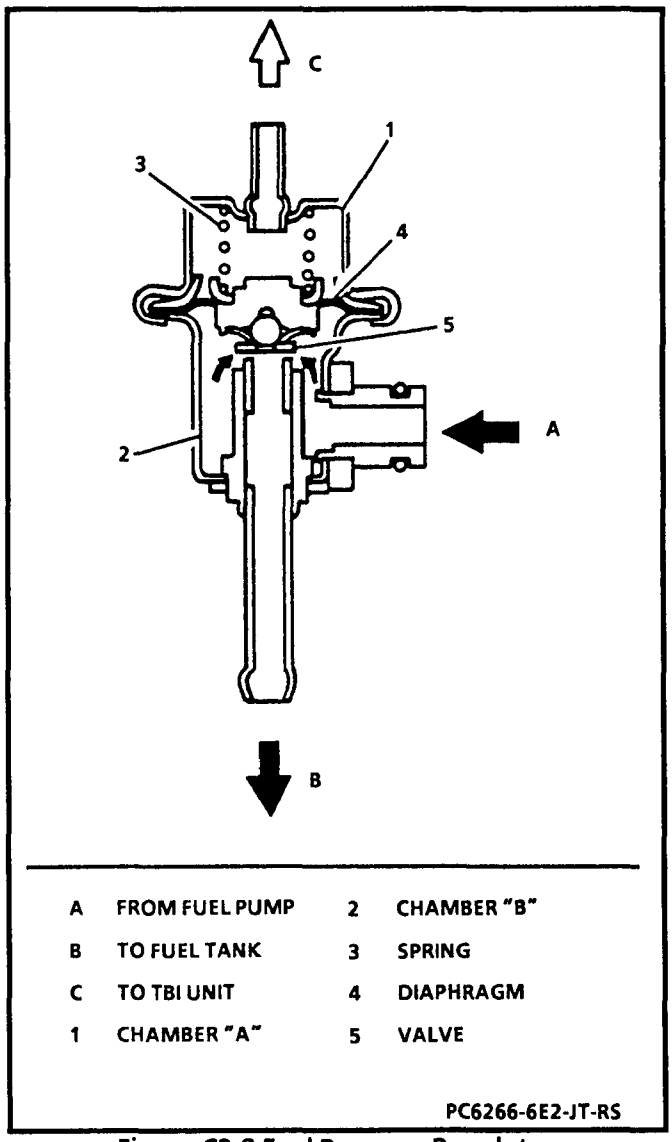

Figure C2-8 Fuel Pressure Regulator

Fast Idle Air Valve
Figure C2-9

The fast idle air valve consists of thermo-wax, springs and a valve. When the engine is cold (engine coolant temperature [ECT] is lower than 60°C [140°F]), the thermo-wax contracts. In this state, the valve opens by the spring force, allowing the air to be drawn into the intake manifold. Thus the amount of intake air increases even when the throttle valve is at the idle position and the engine speed rises to the fast idle state which is higher than the idle speed (Figure C2-9).

As the engine warms up, the thermo-wax expands gradually, the piston pushes down the valve gradually, and the amount of air passing through the fast idle air valve decreases and so does the engine speed. When the ECT reaches about 60°C (140°F), the valve is fully closed and the engine speed is back to the normal idle speed.

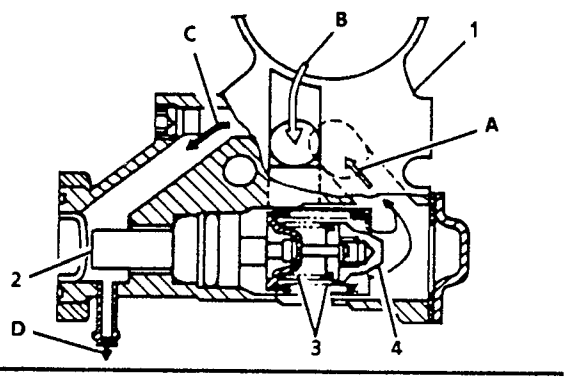

A	AIR TO INTAKE MANIFOLD	1	TBI UNIT
B	AIR FROM AIR CLEANER (ACL)	2	THERMO-WAX
C	ENGINE COOLANT FROM INTAKE MANIFOLD	3	SPRINGS
		4	VALVE
D	ENGINE COOLANT TO INTAKE PIPE		

PC6267-6E2-JT-RS

Figure C2-9 Fast Idle Air Valve

Idle Air Control (IAC) Valve
Figure C2-6

The idle air control (IAC) valve opens and closes the air bypass passage according to the signal from the engine control module (ECM). When it opens, the air is supplied to the intake manifold. This will increase engine rpm for various engine loads (Figure C2-6).

ON-VEHICLE SERVICE

Important

- When vacuum hoses have been disconnected and system components removed for service, be sure to reinstall components properly, and route and connect hoses correctly after service. Refer to "Emission Control Information Label" for proper routing of vacuum hoses.

IDLE SPEED ADJUSTMENT
Figures C2-10 through C2-12

Important

- Before starting engine place manual selector in "P" (automatic transmission) or place gearshift control lever in neutral (manual transmission) and set parking brake and block drive wheels.

1. Check accelerator cable for free movement and excessive play; cable play should be within specification. Refer to SECTION 6C.
2. Inspect lead wires and hoses of the throttle body fuel injection (TBI) and evaporative emission (EVAP) control system for being connected securely.
3. Check ignition timing, and adjust if necessary. Refer to SECTION 6E2-C4.
4. Turn "OFF" all accessories (A/C, wipers, heater, lights, etc.).
5. Make sure air cleaner (ACL) is installed correctly.
6. Remove cover from idle speed adjusting screw (Figure C2-10).

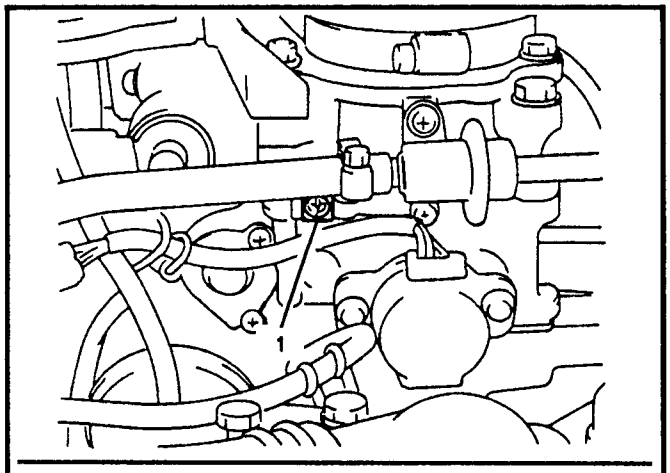

1 IDLE SPEED ADJUSTING SCREW

MS 11263

Figure C2-10 Idle Speed Adjusting Screw

Adjust

- Start engine and allow it to reach normal operating temperature idle (accessories "OFF").

1. Engine speed above 1,500 rpm once and let it slow down to idle speed.
2. Connect Tech 1 (note ENGINE SPEED and ISC ADJUST MONIT).
3. Connect a jumper from diagnostic request terminal in the duty check data link connector (DLC) to ground (Figure C2-11).

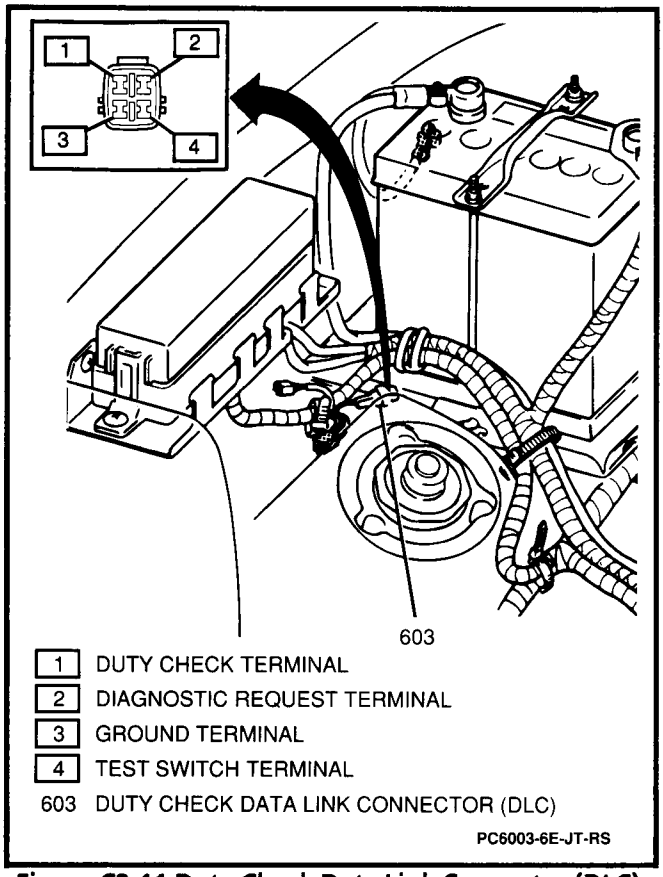

Figure C2-11 Duty Check Data Link Connector (DLC)

4. Check idle speed and ISC duty. ISC duty should read 50% with correct engine idle speed. Refer to Figure C2-12.

TRANSMISSION	A/C OFF	A/C ON
MANUAL	800 ± 50 rpm	1000 ± 50 rpm
AUTOMATIC "P" OR "N"	800 ± 50 rpm	1000 ± 50 rpm
AUTOMATIC "R," "D," "2" OR "L"	800 ± 50 rpm	800 ± 50 rpm

PC6268-6E2-JT-RS

Figure C2-12 Idle Speed Settings

5. Adjust idle speed as necessary. Correct idle speed by turning idle speed adjusting screw "IN" to decrease or "OUT" to increase.
6. Turn A/C switch and blower speed selector switch ON. Perform Steps 4 and 5 again.
7. Remove jumper from duty check DLC.
8. Disconnect Tech 1.
9. Install idle speed adjusting screw cover.

THROTTLE OPENER ADJUSTMENT
Figure C2-13

Important

- Before starting engine place manual selector in "P" (automatic transmission) or place gearshift control lever in neutral (manual transmission) and set parking brake and block drive wheels.

- Start engine and allow it to reach normal operating temperature (accessories "OFF").

1. Engine speed above 1,500 rpm once and let it slow down to idle speed.
2. Connect Tech 1 (note ENGINE SPEED).
3. Disconnect vacuum hose from throttle opener and plug disconnected vacuum hose (Figure C2-13).

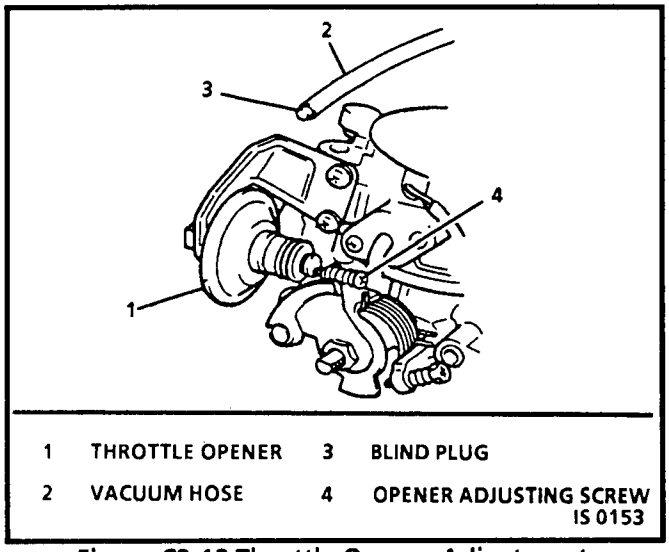

Figure C2-13 Throttle Opener Adjustment

- Check that engine speed is between 2,100 and 2,300 rpm.

Adjust

- Adjust engine speed as necessary. Correct engine speed by turning throttle opener adjusting screw "IN" to increase or "OUT" to decrease.

4. Reconnect vacuum hose to throttle opener.
5. Disconnect Tech 1.

FUEL PRESSURE RELIEF PROCEDURE

CAUTION:

- **To reduce the risk of fire and personal injury, it is necessary to relieve the fuel system pressure before servicing the fuel system.**
- **After relieving fuel system pressure, a small amount of fuel may be released when servicing fuel pipes or connections. In order to reduce the chance of personal injury, cover fuel pipe fittings with a shop towel before disconnecting, to catch any fuel that may leak out. Place the towel in an approved container when disconnect is completed.**

1. Loosen fuel filler cap to relieve fuel tank pressure.
2. Disconnect fuel pump relay electrical connector.
3. Crank engine and allow to stall. Crank engine for an additional three seconds to assure relief of any remaining fuel pressure.
4. Remove negative (-) battery cable to avoid possible fuel discharge if an attempt is made to start the engine.
5. Reconnect fuel pump relay electrical connector.
6. Tighten fuel filler cap.

FUEL SYSTEM PRESSURE TEST
Figure C2-14

Tools Required:
J 34730-1 Fuel Pressure Gage
J 37746 Fuel Gage Adapter

A fuel system pressure test is a part of several diagnostic charts and symptoms checks. To perform this test, follow this procedure:

1. Relieve fuel system pressure. Refer to "Fuel Pressure Relief Procedure" earlier in this section.
2. Raise and suitably support vehicle. Refer to SECTION 0A.
3. Remove fuel filter inlet hose plug (Figure C2-14).
4. Install a J 37746 to fuel filter inlet union bolt (Figure C2-14).
5. Install a J 34730-1 to J 37746 (Figure C2-14).
6. Lower vehicle.
7. Reconnect negative (-) battery cable.

Tighten

- Negative (-) battery cable-to-negative (-) battery terminal retainer to 15 N·m (11 lb.ft.).

8. Start engine and idle at normal operating temperature.

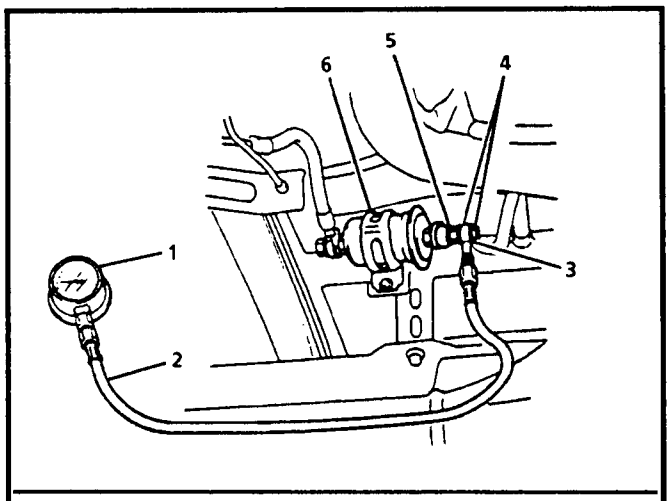

1 FUEL PRESSURE GAGE J 34730-1
2 HOSE
3 FUEL PRESSURE GAGE ADAPTER J 37746
4 GASKET
5 FUEL FILTER INLET UNION BOLT
6 FUEL FILTER

NS 13171-6E2

Figure C2-14 Installing Fuel Pressure Gage

9. Check fuel pressure as follows:
   - Idling – 90-140 kPa (13-20 psi).
   - Engine not running, ignition switch in the "ON" position – 240-280 kPa (34-41 psi).
   - Within one minute with engine not running, ignition switch in the "ON" position – pressure should hold at about 172 kPa (25 psi).

   If pressure is not within specification, refer to the "Diagnostic Circuit Check" in SECTION 6E2-A.
10. Relieve fuel system pressure. Refer to "Fuel Pressure Relief Procedure" earlier in this section.
11. Raise and suitably support vehicle. Refer to SECTION 0A.
12. Disconnect J 34730-1 and J 37746 from fuel filter. Use a shop towel to catch any remaining fuel that may leak.
13. Install fuel filter inlet hose plug.
14. Lower vehicle.
15. Connect negative (-) battery cable.

Tighten

- Negative (-) battery cable-to-negative (-) battery terminal retainer to 15 N·m (11 lb.ft.).

16. Turn ignition switch to "ON" and then back to "LOCK" to pressurize the fuel system. Check for any fuel leaks.

FUEL PUMP RELAY
Figure C2-15

Remove or Disconnect

1. Negative (-) battery cable.
2. Fuel pump relay from engine control module (ECM) bracket (Figure C2-15).

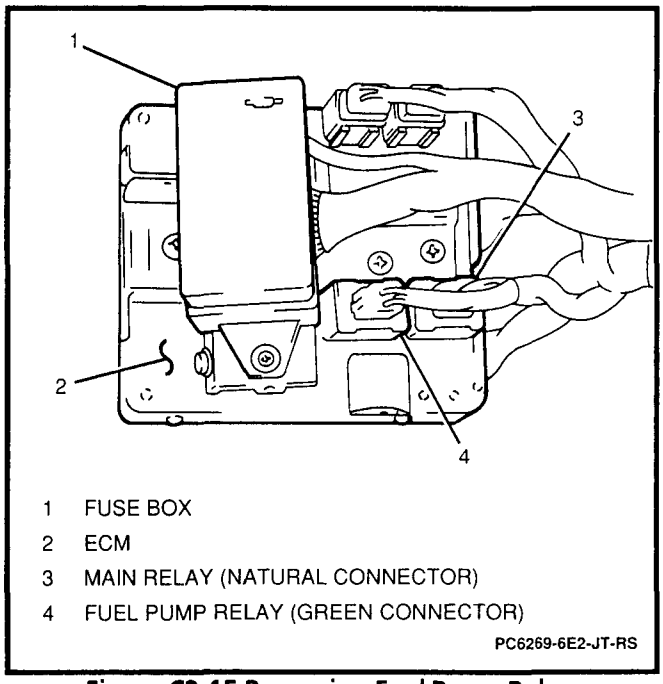

Figure C2-15 Removing Fuel Pump Relay

3. Fuel pump relay electrical connector (Figure C2-15).

Install or Connect

1. Fuel pump relay electrical connector.
2. Fuel pump relay to ECM bracket.
3. Negative (-) battery cable.

Tighten

- Negative (-) battery cable-to-negative (-) battery terminal retainer to 15 N·m (11 lb.ft.).

THROTTLE BODY FUEL INJECTION (TBI) UNIT SERVICE

Inspect

- All throttle body fuel injection (TBI) component parts, with the exception of those noted below, should be cleaned in a cold immersion cleaner such as Carbon X (X-55) or equivalent.

NOTICE: The throttle position (TP) sensor, idle air control (IAC) valve, fuel pressure regulator diaphragm assembly, fuel injector or other components containing rubber should not be placed in a solvent or cleaner bath. A chemical reaction will cause these parts to swell, harden or distort. Do not soak the TBI unit with the above parts attached. If the TBI unit requires cleaning, soaking time in the cleaner should be kept to a minimum. Some models have hidden throttle shaft dust seals that could lose their effectiveness by extended soaking.

Clean

- All metal parts thoroughly and blow dry with shop air. Be sure that all fuel and air passages are free of dirt or burns.

1. Mating casting surfaces for damage that could affect gasket sealing.
2. That the throttle valve lever moves freely and smoothly.

THROTTLE BODY FUEL INJECTION (TBI) UNIT REPLACEMENT
Figures C2-16 through C2-19

Remove or Disconnect

- Relieve fuel system pressure. Refer to "Fuel Pressure Relief Procedure" earlier in this section.
- Drain cooling system. Refer to SECTION 6B.

1. One clamp and air cleaner (ACL) outlet hose from air intake case (Figure C2-16).
2. Four screws and air intake case cover from air intake case (Figure C2-16).
3. Three bolts, two nuts and air intake case from throttle body fuel injection (TBI) unit (Figure C2-16).
4. One clamp and idle air control (IAC) hose from IAC valve.
5. Two nuts and accelerator cable from throttle lever.
6. Two nuts and throttle valve cable from throttle lever (automatic transmission equipped vehicles).
7. Electrical connector that goes to throttle position (TP) sensor and fuel injector (Figure C2-16).
8. IAC valve electrical connector (Figure C2-16).
9. One clamp and engine coolant hose from fast idle air valve.
10. Throttle opener vacuum hose from throttle opener.
11. Exhaust gas recirculation (EGR) vacuum hose from lower TBI unit.
12. EGR modulator from bracket (Figure C2-16).

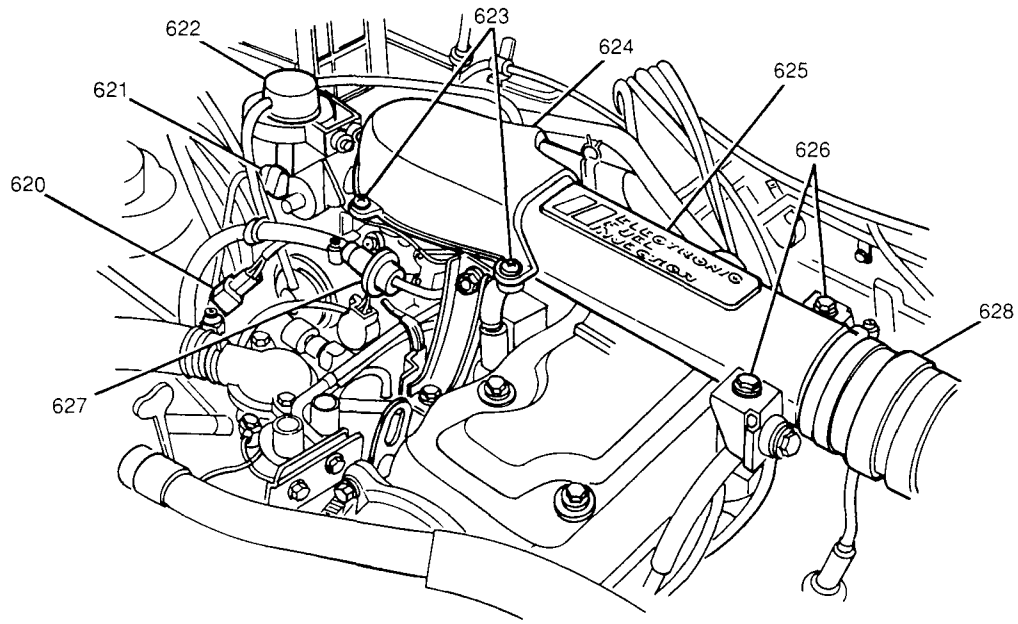

620 FUEL INJECTOR AND TP SENSOR ELECTRICAL CONNECTOR
621 IAC VALVE ELECTRICAL CONNECTOR
622 EGR MODULATOR
623 AIR INTAKE CASE COVER SCREWS
624 AIR INTAKE CASE COVER
625 AIR INTAKE CASE
626 AIR INTAKE CASE BOLT
627 FUEL PRESSURE REGULATOR
628 ACL OUTLET HOSE

PC6270-6E2-JT-RS

Figure C2-16 Throttle Body Fuel Injection (TBI) Unit

13. Two bolts and fuel feed pipe from TBI unit.
14. One bolt and fuel feed pipe clamp from intake manifold.
15. One clamp and fuel return hose from fuel pressure regulator (Figure C2-16).
16. Four bolts and TBI unit from intake manifold.

Disassemble

Important

- Be sure not to remove fast idle air valve from TBI unit. It is not serviceable. It is calibrated at the factory and is not adjustable.

1. Two screws and fuel injector cover from TBI unit.
2. One screw, fuel injector lead wires and retainer from TBI unit.
3. Fuel injector wiring terminals from connector (fuel injector side) and fuel injector from TBI unit.

- To free fuel injector, hold a shop towel over injector and using air gun, blow 600 kPa (87 psi) compressed air into the inlet port of the TBI unit.

4. Two bolts and TP sensor from TBI unit.
5. Two screws, fuel pressure regulator and hose from TBI unit.

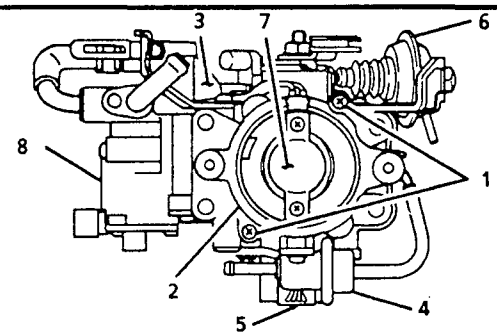

1 SCREWS
2 UPPER BODY
3 LOWER BODY
4 FUEL PRESSURE REGULATOR
5 THROTTLE POSITION SENSOR
6 THROTTLE OPENER
7 FUEL INJECTOR
8 IAC VALVE

PC6271-6E2-JT-RS

Figure C2-17 TBI Unit Disassembly

6. One clamp and IAC valve hose from fast idle air valve.
7. Two screws and IAC valve from TBI unit.
8. Two screws and throttle opener from TBI unit.
9. Two screws and upper TBI unit from lower TBI unit.

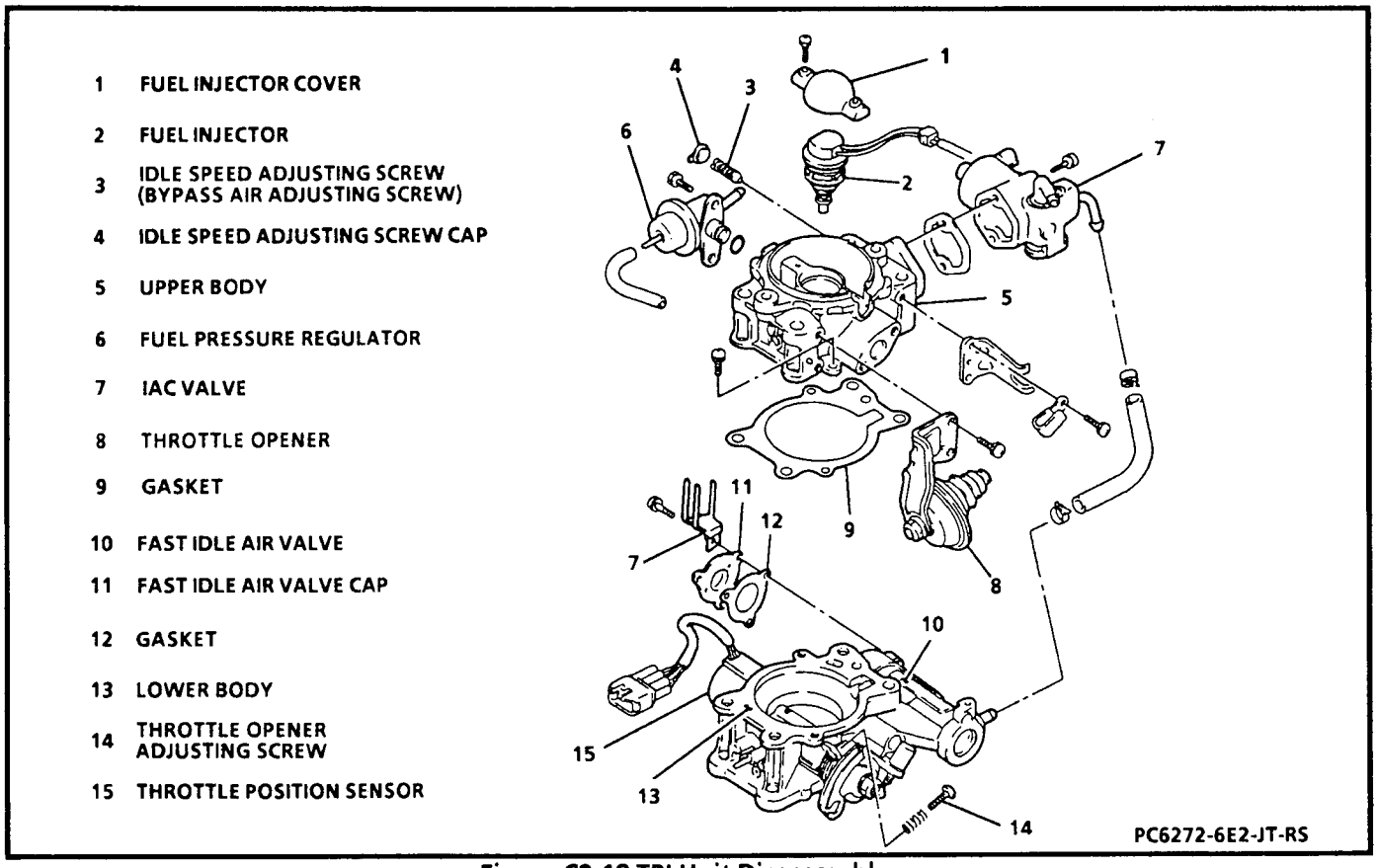

Figure C2-18 TBI Unit Disassembly

Clean

- Clean below passages and fuel injector chamber by blowing compressed air.

NOTICE:

- The TP sensor, IAC valve, fuel pressure regulator, fuel injector, fast idle air valve, throttle opener or other components containing rubber must not be placed in a solvent or cleaner bath. A chemical reaction will cause these parts to swell, harden or deform.
- Do not put drills or wires into passages for cleaning. They will damage the passages.

Assemble

1. New gasket to lower TBI unit (Figure C2-19).
2. Upper TBI unit to lower TBI unit, being careful not to cause the gasket to slip out of place; secure with two screws.

Tighten

- Upper TBI unit-to-lower TBI unit screws to 3.5 N·m (31 lb.in.).

3. Throttle opener to TBI unit; secure with two screws.

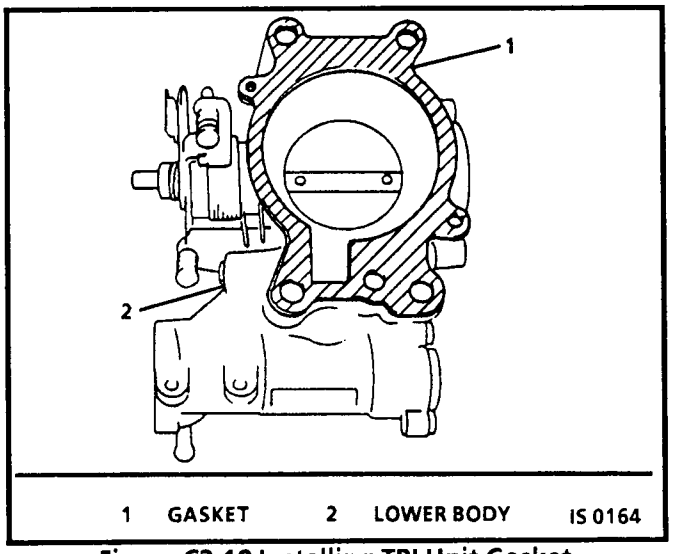

Figure C2-19 Installing TBI Unit Gasket

4. IAC valve to TBI unit; secure with two screws.

Tighten

- IAC valve screws to 5 N·m (44 lb.in.).

5. IAC valve hose to fast idle air valve hose; secure with one clamp.
6. Fuel pressure regulator and hose to TBI unit; secure with two screws.

Tighten

- Fuel pressure regulator screws to 3.5 N·m (31 lb.in.).

7. TP sensor to TBI unit; secure with two bolts. Do not tighten fully.
8. Fuel injector wiring terminals into connector (fuel injector side) and fuel injector to TBI unit.
9. Fuel injector cover to TBI unit; secure with two screws.

Install or Connect

1. New TBI unit gasket.
2. TBI unit to intake manifold; secure with four bolts.

Tighten

- TBI unit bolts to 23 N·m (17 lb.ft.).

3. Fuel return hose to fuel pressure regulator; secure with one clamp.
4. Fuel feed pipe clamp to intake manifold; secure with one bolt.

Tighten

- Fuel feed pipe clamp bolt to 15 N·m (11 lb.ft.).

5. Fuel feed pipe to TBI unit; secure with two bolts.

Tighten

- Fuel feed pipe bolts to 46 N·m (33 lb.ft.).

6. EGR modulator to bracket.
7. EGR vacuum hose to lower TBI unit.
8. Throttle opener vacuum hose to throttle opener.
9. Engine coolant hose to fast idle air valve; secure with one clamp.
10. IAC valve electrical connector.
11. Electrical connector that goes to TP sensor and fuel injector.
12. Throttle valve cable to throttle lever; secure with two nuts (automatic transmission equipped vehicles). Do not tighten fully.
13. Accelerator cable to throttle lever; secure with two nuts. Do not tighten fully.
14. IAC hose to IAC valve; secure with one clamp.
15. Air intake case to TBI unit; secure with two nuts and three bolts.

Tighten

- Air intake case nuts and bolts to 17 N·m (13 lb.ft.).

16. Air intake case cover to air intake case; secure with four screws.
17. ACL outlet hose to air intake case; secure with one clamp.
18. Negative (-) battery cable.

Tighten

- Negative (-) battery cable-to-negative (-) battery terminal retainer to 15 N·m (11 lb.ft.).

Adjust

- Accelerator cable. Refer to SECTION 6C.
- Throttle valve cable. Refer to SECTION 7A.
- TP sensor. Refer to SECTION 6E2-C1.

- Refill engine coolant to proper level. Refer to SECTION 6B.
- Turn ignition switch to "ON" and then back to "LOCK" to pressurize the fuel system. Check for any fuel leaks.

FUEL INJECTOR
Figures C2-16, C2-20 and C2-21

NOTICE: Use care when handling the fuel injector, to prevent damage especially to the filter and the injector needle. Also, because the injector is an electrical component, it should not be immersed in any type of liquid solvent or cleaner, as damage may occur.

Remove or Disconnect

- Relieve fuel system pressure. Refer to "Fuel Pressure Relief Procedure" earlier in this section.

1. One clamp and air cleaner (ACL) outlet hose from air intake case (Figure C2-16).
2. Four screws and air intake case cover from air intake case (Figure C2-16).
3. Two nuts and three bolts and air intake case from throttle body fuel injection (TBI) unit (Figure C2-16).
4. Two bolts and fuel feed pipe from TBI unit.
5. One bolt and fuel feed pipe clamp from intake manifold.
6. Electrical connector that goes to throttle position (TP) sensor and fuel injector (Figure C2-16).
7. Two screws and fuel injector cover from TBI unit.
8. One screw, fuel injector lead wires and retainer from TBI unit.
9. Fuel injector wiring terminals from connector (fuel injector side) and fuel injector from TBI unit.

- To free fuel injector, hold a shop towel over injector and using air gun, blow 600 kPa (87 psi) compressed air into the inlet port of the TBI unit (Figure C2-20).

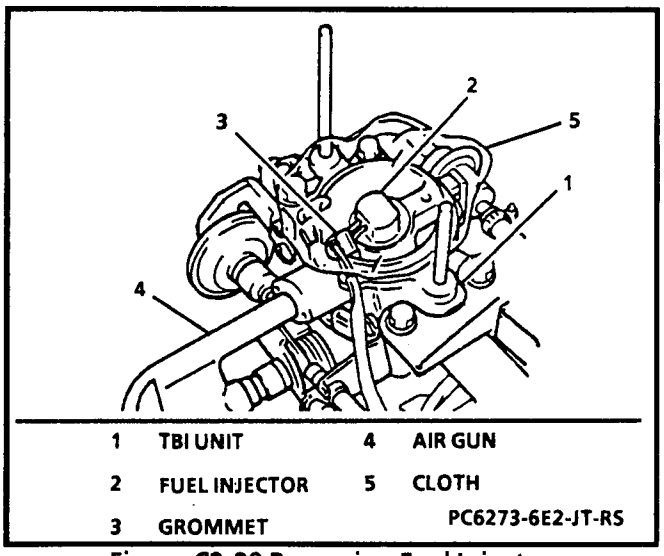

Figure C2-20 Removing Fuel Injector

Inspect

- Fuel injector filter for dirt or damage. If dirt is present check for dirt in fuel pipes and fuel tank.
- Fuel injector O-ring for deterioration. Replace as necessary.

Important

- Be sure to replace the fuel injector with an identical part. Other injectors may appear to be the same, but they are calibrated differently for different flow rates.

Install or Connect

NOTICE: Never twist injector while installing as damage or misplacement of O-rings may occur.

- Apply a thin coat of oil to the new upper and lower O-rings; install them on to the injector.

1. Fuel injector to TBI unit (Figure C2-21).

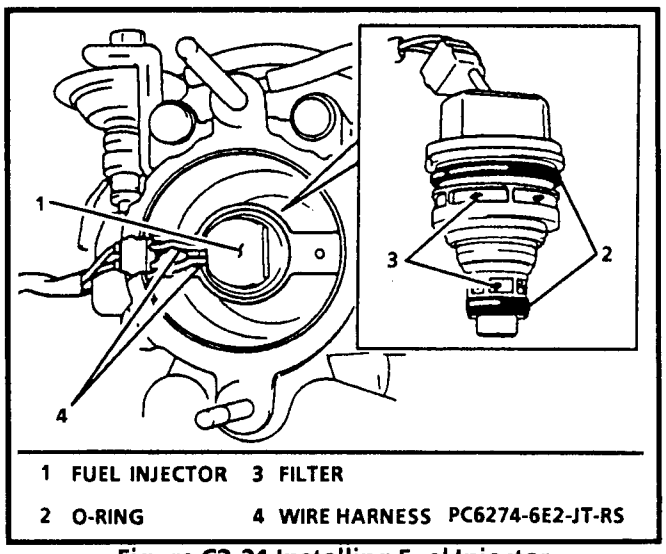

Figure C2-21 Installing Fuel Injector

2. Fuel injector wiring terminals into connector (fuel injector side) and fuel injector to TBI unit.
3. Fuel injector cover to TBI unit; secure with two screws.
4. Fuel feed pipe to TBI unit; secure with two bolts.

Tighten

- Fuel feed pipe bolts to 46 N·m (33 lb.ft.).

5. Pipe clamp to intake manifold; secure with one bolt.

Tighten

- Fuel feed pipe clamp bolt to 15 N·m (11 lb.ft.).

6. Air intake case to TBI unit; secure with two nuts and three bolts.

Tighten

- Air intake case nuts and bolts to 17 N·m (13 lb.ft.).

7. Air intake case cover to air intake case; secure with four screws.
8. ACL outlet hose to air intake case; secure with one clamp.
9. Negative (-) battery cable.

Tighten

- Negative (-) battery cable-to-negative battery terminal retainer to 15 N·m (11 lb.ft.).

- Turn ignition switch to "ON" and then back to "LOCK" to pressurize the fuel system. Check for any fuel leaks.

FAST IDLE AIR VALVE CHECK
Figure C2-22

1. Remove three screws and fast idle air valve cap (Figure C2-22).

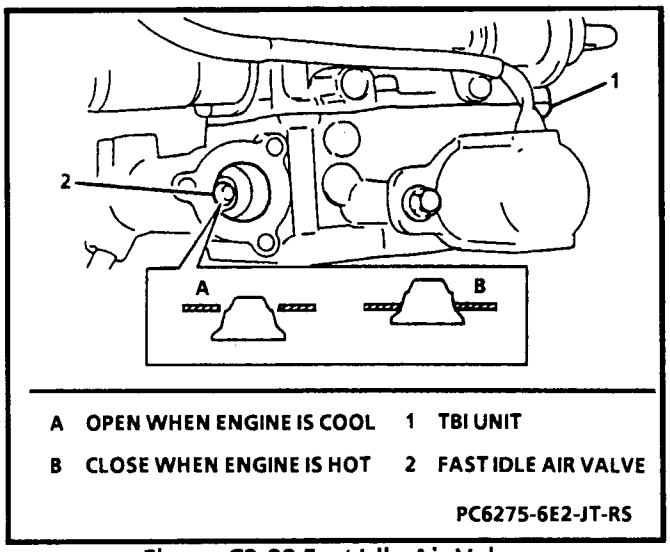

Figure C2-22 Fast Idle Air Valve

Inspect

- Fast idle air valve. Should be open with engine coolant temperature (ECT) below 60°C (140°F) (Figure C2-22).

2. Using a new gasket reconnect fast idle air valve cap; secure with three screws.
3. Start and run engine until normal operating temperature is attained, 80°C (176°F) or higher.
4. Remove three screws and fast idle air valve cap (Figure C2-22).

Inspect

- Fast idle air valve. Should be closed (Figure C2-22).

5. Using a new gasket reconnect fast idle air valve cap; secure with three screws.

FUEL PRESSURE REGULATOR
Figures C2-23 and C2-24

Remove or Disconnect

1. Relieve fuel system pressure. Refer to "Fuel Pressure Relief Procedure" earlier in this section.
2. One clamp, fuel return hose and vacuum hose from fuel pressure regulator (Figure C2-23).

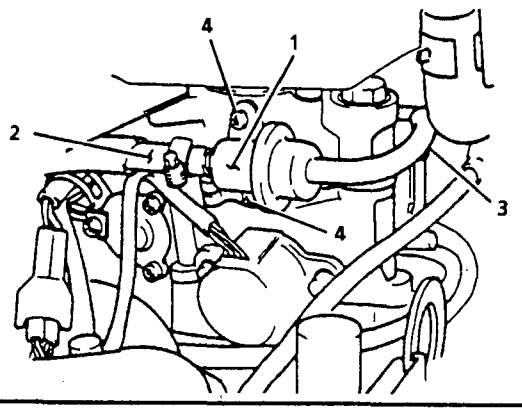

1 FUEL PRESSURE REGULATOR
2 FUEL RETURN HOSE
3 VACUUM HOSE
4 FUEL PRESSURE REGULATOR SCREWS

PC6276-6E2-JT-RS

Figure C2-23 Removing Fuel Pressure Regulator

3. Two screws and fuel pressure regulator from throttle body fuel injection (TBI) unit (Figure C2-23).

Install or Connect

- Apply a thin coat of oil to new O-ring (Figure C2-24).

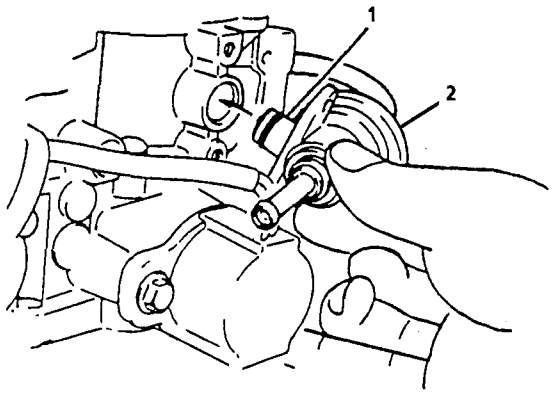

1 O-RING
2 FUEL PRESSURE REGULATOR

PC6277-6E2-JT-RS

Figure C2-24 Installing Fuel Pressure Regulator

1. Fuel pressure regulator to TBI unit; secure with two screws (Figure C2-24).

Tighten

- Fuel pressure regulator screws to 3.5 N·m (31 lb.ft.).

2. Fuel return hose and vacuum hose to fuel pressure regulator; secure with one clamp.
3. Negative (-) battery cable.

Tighten

- Negative (-) battery cable-to-negative (-) battery terminal retainer to 15 N·m (11 lb.ft.).

- Turn ignition switch to "ON" and then back to "LOCK" to pressurize the fuel system. Check for any fuel leaks.

IDLE AIR CONTROL (IAC) VALVE
Figure C2-25

Remove or Disconnect

1. Negative (-) battery cable.
2. Idle air control (IAC) valve electrical connector (Figure C2-25).

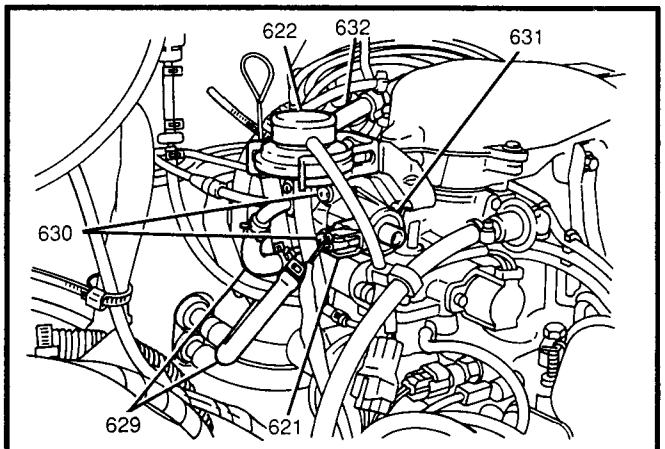

621 IAC VALVE ELECTRICAL CONNECTOR
622 EGR MODULATOR
629 ENGINE COOLANT HOSES
630 IAC VALVE SCREWS
631 IAC VALVE
632 IAC VALVE HOSE
PC6278-6E2-JT-RS

Figure C2-25 Removing IAC Valve

3. Exhaust gas recirculation (EGR) vacuum modulator from bracket (Figure C2-25).
4. One clamp and IAC hose from IAC valve (Figure C2-25).
- Drain engine coolant. Refer to SECTION 6B.
5. Two clamps and two engine coolant hoses from IAC valve (Figure C2-25).
6. Two screws and IAC valve from throttle body fuel injection (TBI) unit (Figure C2-25).

Install or Connect

1. New gasket and IAC valve to TBI unit; secure with two screws.

Tighten

- IAC valve screws to 5 N·m (44 lb.in.).

2. Two engine coolant hoses to IAC valve; secure with two clamps.
3. IAC air hose to IAC valve; secure with one clamp.
4. EGR vacuum modulator to bracket.
5. IAC valve electrical connector.
6. Negative (-) battery cable.

Tighten

- Negative (-) battery cable-to-negative (-) battery terminal retainer to 15 N·m (11 lb.ft.).
- Refill engine coolant. Refer to SECTION 6B.

THROTTLE OPENER SOLENOID VACUUM (TO SV) VALVE
Figure C2-26

Remove or Disconnect

1. Negative (-) battery cable.
2. Throttle opener solenoid vacuum (TO SV) valve electrical connector (Figure C2-26).

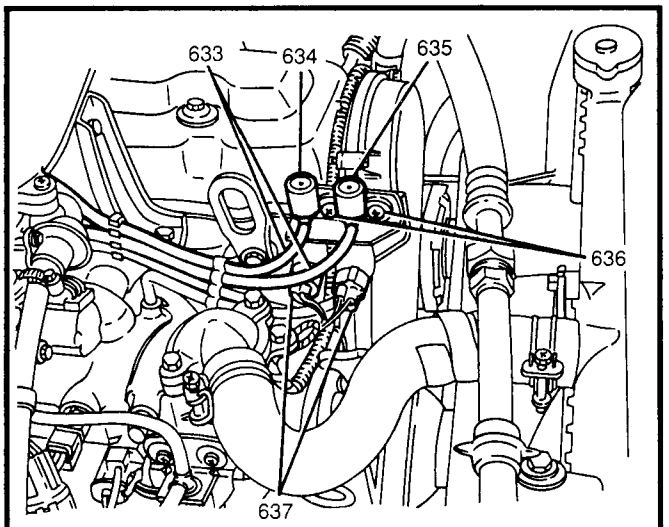

633 VACUUM HOSES
634 EGR SV VALVE
635 TO SV VALVE
636 SCREWS
637 ELECTRICAL CONNECTORS
PC6283-6E2-JT-RS

Figure C2-26 Throttle Opener Solenoid Vacuum (TO SV) Valve

3. Exhaust gas recirculation solenoid vacuum (EGR SV) valve electrical connector (Figure C2-26).
4. Two vacuum hoses from TO SV valve (Figure C2-26).
5. Two vacuum hoses from EGR SV valve (Figure C2-26).
6. Two screws, EGR SV valve and TO SV valve assembly from mounting bracket.

Install or Connect

1. EGR SV valve and TO SV valve assembly to mounting bracket; secure with two screws.
2. Two vacuum hoses to EGR SV valve.
3. Two vacuum hose to TO SV valve.
4. EGR SV valve electrical connector.
5. TO SV valve electrical connector.
6. Negative (-) battery cable.

Tighten

- Negative (-) battery cable-to-negative (-) battery terminal retainer to 15 N·m (11 lb.ft.).

SPECIFICATIONS

FASTENER TIGHTENING SPECIFICATIONS

Negative (-) Battery Cable-to-Negative (-) Battery Terminal Retainer	15 N·m (11 lb.ft.)
Upper TBI Unit-to-Lower TBI Unit Screws	3.5 N·m (31 lb.in.)
IAC Valve Screws	5 N·m (41 lb.in.)
TBI Unit Bolts	23 N·m (17 lb.ft.)
Fuel Feed Pipe Clamp Bolt	15 N·m (11 lb.ft.)
Fuel Feed Pipe Bolts	46 N·m (33 lb.ft.)
Air Intake Case Nuts and Bolts	17 N·m (13 lb.ft.)
Fuel Pressure Regulator Screws	3.5 N·m (31 lb.in.)

SERVICE PARTS INFORMATION

Component Name Used in Section 6E2-C2	Reference Name in Service Parts Catalog	Group Number
Fuel Injector	Injector, TBI Fuel	3.774
Fuel Pressure Regulator	Regulator, F/Injn Fuel Press	3.330
Idle Air Control (IAC) Valve	Solenoid, Asm	3.314
Throttle Body Fuel Injection (TBI) Unit	Injector, TBI Fuel	3.725
Throttle Opener	Dash Pot, Throt Body	3.306
Throttle Opener Solenoid Vacuum (TO SV) Valve	Serviced as part of Valve, EGR Vlv Vac Cont Chk	3.670

BLANK

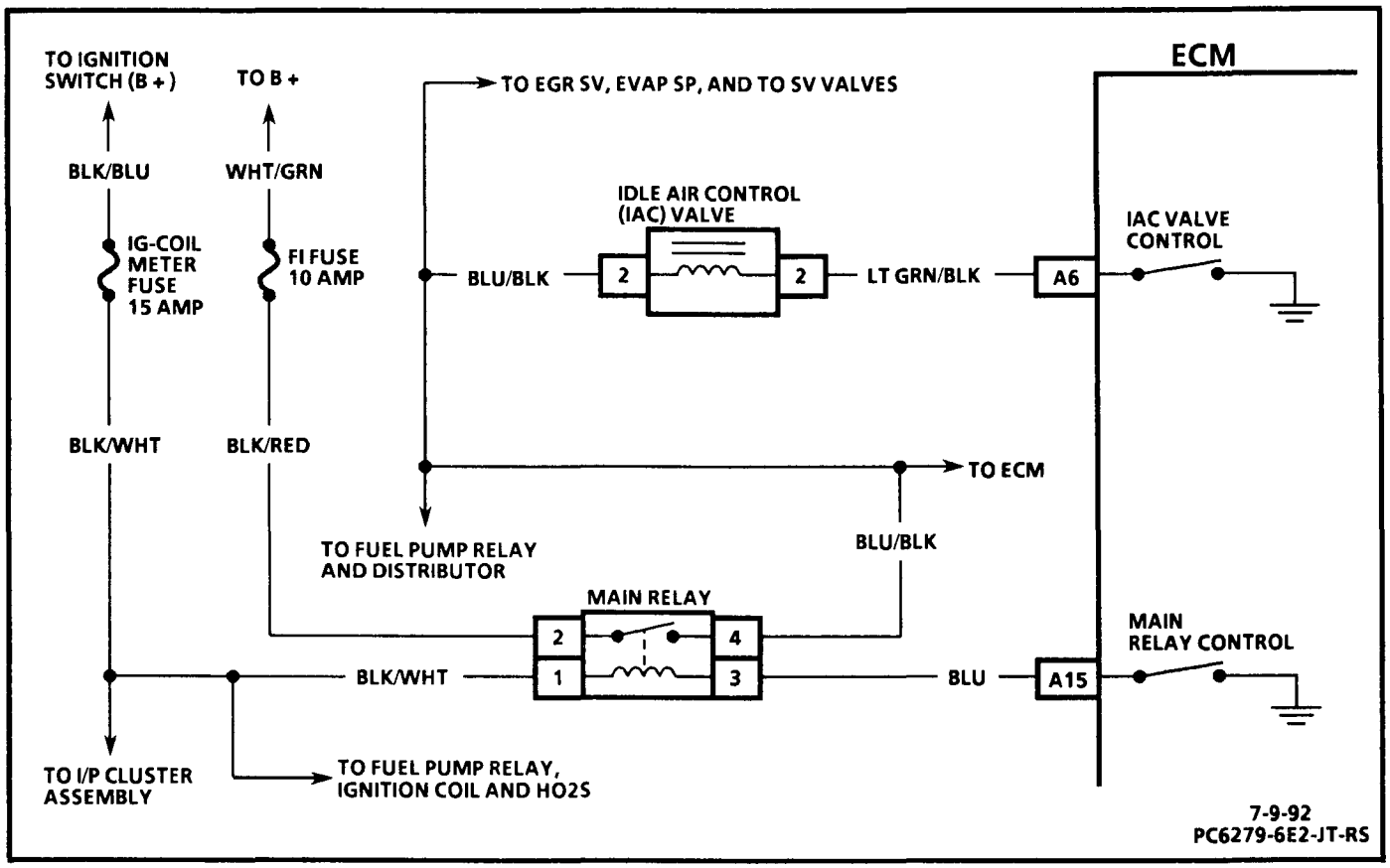

CHART C-2

IDLE AIR CONTROL (IAC) VALVE CHECK 1.6L (VIN U) "E/J" TRUCK

Circuit Description:

The engine control module (ECM) controls the idle air control (IAC) valve to regulate an opening at the throttle body fuel injection (TBI) unit. The amount of the opening determines the idle speed. The IAC valve is regulated according to engine load. A stalling condition or rough idle could be caused by the IAC valve not functioning properly.

Test Description: Number(s) below refer to circled number(s) on the diagnostic chart.

1. This checks if voltage is present at the IAC valve.
2. This checks if the ECM is supplying a ground path.
3. This checks the resistance of the IAC valve. Should be 11-14 ohms at 20°C (68°F).

CHART C-2

IDLE AIR CONTROL (IAC) VALVE CHECK 1.6L (VIN U) "E/J" TRUCK

1

- TURN IGNITION SWITCH TO "LOCK."
- DISCONNECT IAC VALVE CONNECTOR.
- CONNECT A TEST LIGHT FROM IAC VALVE CONNECTOR CAVITY "2" TO GROUND (HARNESS SIDE).
- TURN IGNITION SWITCH TO "ON."

TEST LIGHT SHOULD LIGHT.
DOES IT?

YES →

2

- TURN IGNITION SWITCH TO "LOCK."
- WITH A TEST LIGHT TO B+, PROBE IAC VALVE CONNECTOR CAVITY "1".
- TURN IGNITION SWITCH TO "ON."
- NOTE TEST LIGHT WHILE IGNITION SWITCH IS IN "LOCK" AND "ON."

TEST LIGHT SHOULD LIGHT WITH THE IGNITION SWITCH IN "LOCK" AND SHOULD GO OUT WITH THE IGNITION SWITCH IN "ON."
DOES IT?

NO → REPAIR OPEN IN BLU/BLK WIRE.

YES →

3

- TURN IGNITION SWITCH TO "LOCK."
- CONNECT A DIGITAL MULTIMETER FROM IAC VALVE CONNECTOR TERMINAL "1" TO TERMINAL "2" (VALVE SIDE).
- MEASURE RESISTANCE.

SHOULD BE 11-14 OHMS AT 20° C (68° F).
IS IT?

NO → REPLACE IAC VALVE.

YES → IAC VALVE SYSTEM IS FUNCTIONING PROPERLY.

NO →

- IF TEST LIGHT DID NOT LIGHT WITH THE IGNITION SWITCH IN "LOCK," CHECK FOR AN OPEN IN LT GRN/BLK WIRE AND A POOR CONNECTION AT THE ECM.
  IF OK, REPLACE ECM.
- IF TEST LIGHT REMAINS LIT WITH THE IGNITION SWITCH IN "ON," CHECK FOR A SHORT TO GROUND IN LT BRN/BLK WIRE.
  IF OK, REPLACE ECM.

7-7-92
PC6280-6E2-JT-RS

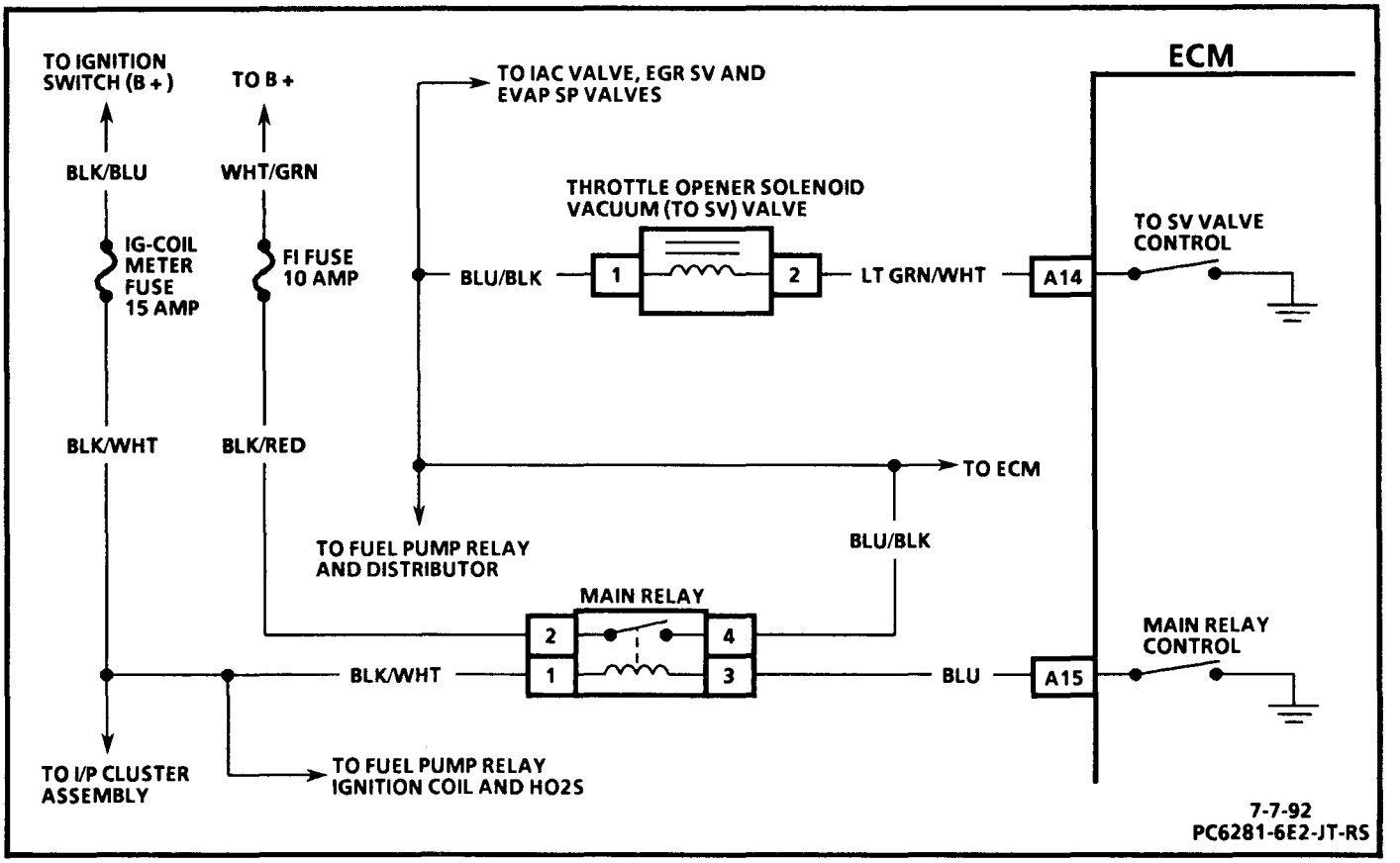

CHART C-2A

THROTTLE OPENER SOLENOID VACUUM (TO SV) VALVE CHECK 1.6L (VIN U) "E/J" TRUCK

Circuit Description:

The engine control module (ECM) controls the throttle opener solenoid vacuum (TO SV) valve to allow vacuum to the throttle opener. The throttle opener is used to increase rpm during engine start-up period to help the engine warm up to operating temperature faster. Once the engine coolant temperature (ECT) sensor indicates that the engine temperature is above 60°C (140°F), the TO SV valve reduces the idle speed to normal engine rpm. The TO SV valve can remain "ON" for a time period of 0.2-35 seconds after engine start-up, depending on ECT.

Test Description: Number(s) below refer to circled number(s) on the diagnostic chart.

1. Checks for power to the TO SV valve.
2. Checks ground circuit to the TO SV valve.
3. Checks for a faulty throttle opener.
4. Checks for a faulty TO SV valve.
5. Determines if system is operating normally.

CHART C-2A

THROTTLE OPENER SOLENOID VACUUM (TO SV) VALVE CHECK 1.6L (VIN U) "E/J" TRUCK

1
- TURN IGNITION SWITCH TO "LOCK."
- DISCONNECT TO SV VALVE CONNECTOR.
- CONNECT A TEST LIGHT FROM TO SV VALVE CONNECTOR CAVITY "1" TO GROUND (HARNESS SIDE).
- TURN IGNITION SWITCH TO "ON."

TEST LIGHT SHOULD LIGHT.
DOES IT?

YES → **2**

NO → REPAIR OPEN IN BLU/BLK WIRE.

2
- TURN IGNITION SWITCH TO "LOCK."
- WITH A TEST LIGHT TO B+, PROBE TO SV VALVE CONNECTOR CAVITY"2".
- TURN IGNITION SWITCH TO "ON."
- NOTE TEST LIGHT.

TEST LIGHT SHOULD LIGHT MOMENTARILY AND THEN GO OUT.
DOES IT?

YES → **3**

NO
- CHECK FOR AN OPEN OR A SHORT TO GROUND IN LT BRN/WHT WIRE.
- CHECK FOR POOR CONNECTION AT ECM.

IF OK, REPLACE ECM.

3
- TURN IGNITION SWITCH TO "LOCK."
- REMOVE THROTTLE OPENER VACUUM HOSE FROM TO SV VALVE.
- CONNECT A VACUUM PUMP TO VACUUM HOSE AND APPLY VACUUM.
- NOTE THROTTLE OPENER FOR MOVEMENT WHILE APPLYING VACUUM.

THROTTLE OPENER SHOULD MOVE.
DOES IT?

YES → **4**

NO
- CHECK VACUUM HOSES FOR LEADS OR RESTRICTIONS.

IF OK, REPLACE THROTTLE OPENER.

4
- RECONNECT VACUUM HOSE TO THE TO SV VALVE.
- REMOVE VACUUM HOSE FROM THE INTAKE MANIFOLD THAT GOES TO THE TO SV VALVE.
- CONNECT A VACUUM PUMP TO VACUUM HOSE AND APPLY VACUUM.
- NOTE THROTTLE OPENER FOR MOVEMENT WHILE APPLYING VACUUM.

THROTTLE OPENER SHOULD MOVE.
DOES IT?

YES → **5**

NO
- CHECK VACUUM HOSES FOR LEAKS OR RESTRICTIONS.

IF OK, REPLACE TO SV VALVE.

5
- LEAVE VACUUM PUMP CONNECTED TO VACUUM HOSE.
- BACKPROBE TO SV VALVE CONNECTOR WITH A FUSED JUMPER FROM CAVITY "2" TO GROUND.
- TURN IGNITION SWITCH TO "ON."
- APPLY VACUUM.
- NOTE THROTTLE OPENER FOR MOVEMENT WHILE APPLYING VACUUM.

THROTTLE OPENER SHOULD MOVE.
DOES IT?

YES → REPLACE TO SV VALVE.

NO
- THROTTLE OPENER AND TO SV VALVE ARE OPERATING NORMALLY.

7-7-92
PC6282-6E2-JT-RS

BLANK

SECTION C3
EVAPORATIVE EMISSION (EVAP) CONTROL SYSTEM

CONTENTS

General Description 6E2-C3-1
Purpose 6E2-C3-1
Evaporative Emission (EVAP) Control System 6E2-C3-1
Results of Incorrect Operation 6E2-C3-1
On-Vehicle Service 6E2-C3-2
Evaporative Emission (EVAP) Canister Replacement 6E2-C3-2
Evaporative Emission (EVAP) Canister Hoses 6E2-C3-3
Evaporative Emission Solenoid Purge (EVAP SP) Valve 6E2-C3-3
Tank Pressure Control (TPC) Valve 6E2-C3-4
Specifications 6E2-C3-4
Fastener Tightening Specifications .. 6E2-C3-4
Service Parts Information 6E2-C3-4
Chart C-3 Evaporative Emission Solenoid Purge (EVAP SP) Valve Check 6E2-C3-6

GENERAL DESCRIPTION

PURPOSE

The basic evaporative emission (EVAP) control system used on all vehicles is the EVAP canister storage method. This method transfers fuel vapor from the fuel tank to an activated carbon (charcoal) storage device (EVAP canister) to hold the vapors when the vehicle is not operating. When the engine is running the fuel vapor is purged from the carbon element by intake air flow and consumed in the normal combustion process.

EVAPORATIVE EMISSION (EVAP) CONTROL SYSTEM
Figure C3-1

An evaporative emission (EVAP) control system is used to prevent emission of fuel vapor.

The vapor generated in the fuel tank while driving, or with the engine at a stop, passes through a tank pressure control (TPC) valve and enters the EVAP canister where charcoal absorbs and stores the fuel vapor.

Only when the following conditions are satisfied, the engine control module (ECM) will energize the EVAP solenoid purge (SP) valve, allowing ported vacuum to be applied through the EVAP SP valve to the EVAP canister, thus purging the EVAP canister.

1. Engine running.
2. Engine coolant temperature (ECT) is high (engine at operating temperature).
3. Throttle valve opening not in the idle position.

As a result, fuel vapor in the EVAP canister is sucked into the intake manifold through the EVAP SP valve and purge hose. In this state, the EVAP canister is purged or cleaned by air drawn through the filter at the bottom of the EVAP canister.

Ported vacuum is applied to the EVAP canister through the EVAP SP valve when the ECM commands the EVAP SP valve ON. When the ECT is low, the ECM interrupts the ground path to the EVAP SP valve. Therefore, ported vacuum is not applied to the EVAP canister. In this state, the EVAP canister is not purged.

The TPC valve is provided to keep pressure in the fuel tank constant. When the pressure in the fuel tank becomes positive and reaches its specified value, it opens the valve to let the vapor flow into the EVAP canister. When the pressure in the fuel tank becomes negative and reaches its specified value, it opens the valve to let the air flow into the fuel tank.

RESULTS OF INCORRECT OPERATION

Poor idle, stalling and poor driveability can be caused by:

- Damaged evaporative emission (EVAP) canister.
- Hoses split, cracked and/or not connected to the proper tubes.

Evidence of fuel loss or fuel vapor odor can be caused by:

- Liquid fuel leaking from fuel pipes
- Cracked or damaged EVAP canister.
- Disconnected, misrouted, kinked, deteriorated or damaged vapor hoses.

If the EVAP solenoid purge (SP) valve is always energized (open), the EVAP canister can purge to the intake manifold at all times. This can allow extra fuel at idle or during warm-up, which can cause rough or unstable idle, or too rich operation.

If the EVAP SP valve is never energized (closed), the EVAP canister can become overloaded resulting in odor.

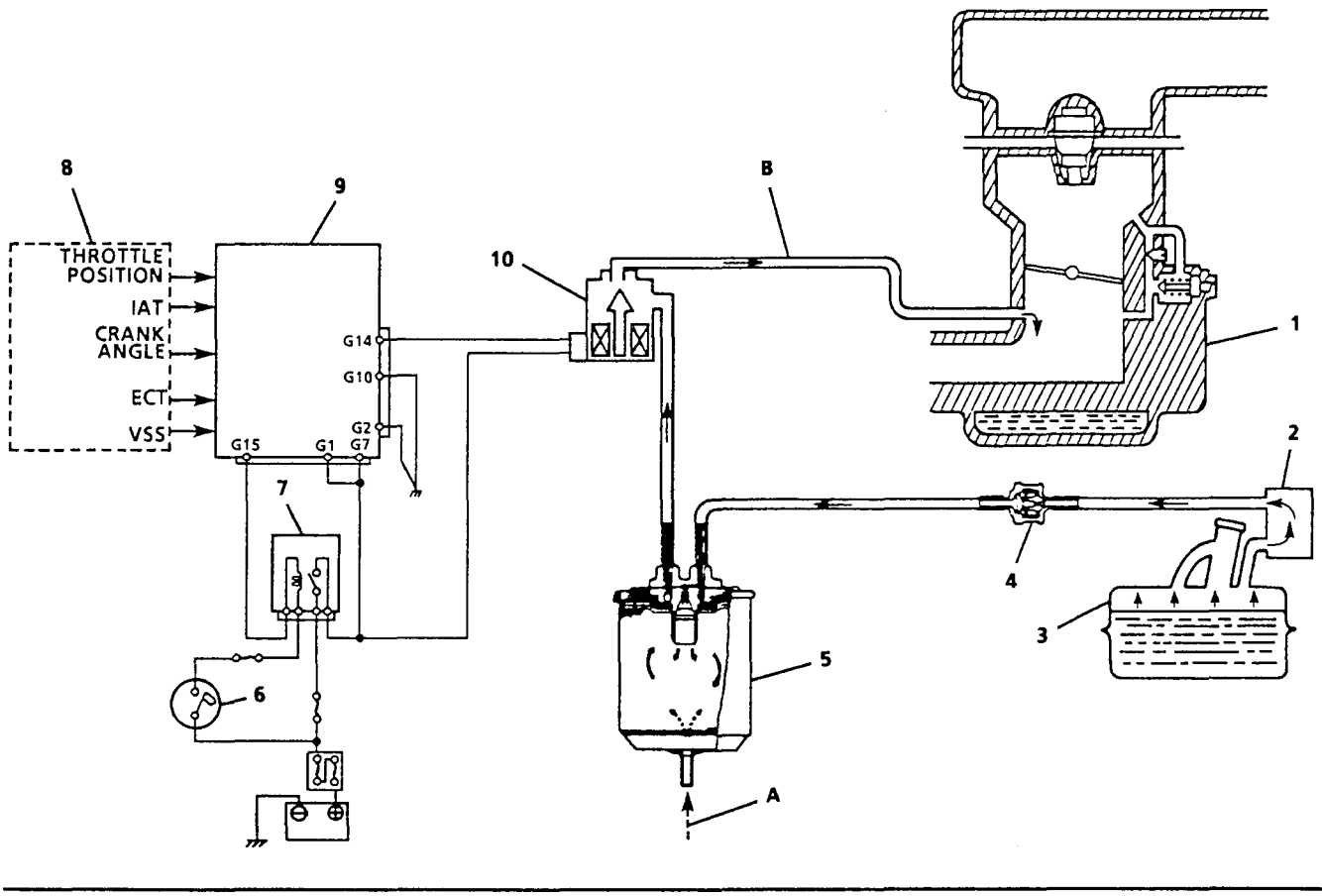

A	AIR	3	FUEL TANK	7	MAIN RELAY
B	VAPOR AND AIR	4	TPC VALVE	8	SENSED INFORMATION
1	TBI UNIT	5	EVAP CANISTER	9	ECM
2	VAPOR LIQUID SEPARATOR	6	IGNITION SWITCH	10	EVAP SP VALVE

PC6284-6E2-JT-RS

Figure C3-1 Evaporative Emission (EVAP) Control System

ON-VEHICLE SERVICE

Important

- A careful visual check of the evaporative emission (EVAP) canister, the connecting vacuum hose and solenoid purge (SP) valve, should be made before diagnosis of the EVAP canister problem.

EVAPORATIVE EMISSION (EVAP) CANISTER REPLACEMENT

Figure C3-2

Remove or Disconnect

1. Negative (-) battery cable.

2. One clamp and two vacuum hoses from evaporative emission (EVAP) canister (Figure C3-2).

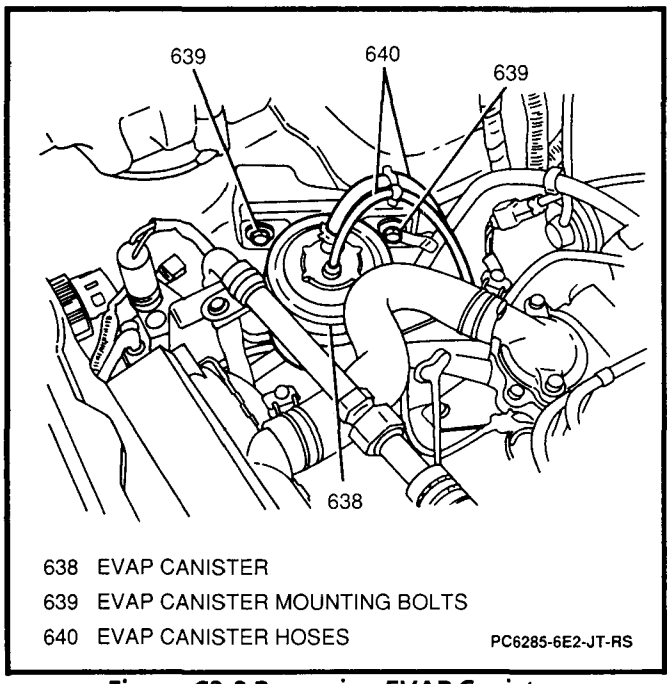

Figure C3-2 Removing EVAP Canister

3. Two bolts, EVAP canister and mounting bracket from engine compartment (Figure C3-2).
4. One screw and EVAP canister from mounting bracket.

Install or Connect

1. EVAP canister to mounting bracket; secure with one screw.
2. EVAP canister and mounting bracket to engine compartment; secure with two bolts.

Tighten

- EVAP canister bolts to 15 N·m (11 lb.ft.).

3. Two vacuum hoses to EVAP canister, secure with one clamp.
4. Negative (-) battery cable.

Tighten

- Negative (-) battery cable-to-negative (-) battery terminal retainer to 15 N·m (11 lb.ft.).

EVAPORATIVE EMISSION (EVAP) CANISTER HOSES

Refer to Vehicle Emissions Control Information Label for proper routing of evaporative emission (EVAP) hoses.

EVAPORATIVE EMISSION SOLENOID PURGE (EVAP SP) VALVE

Figure C3-3

Remove or Disconnect

1. Negative (-) battery cable.
2. Evaporative emission solenoid purge (EVAP SP) valve electrical connector (Figure C3-3).

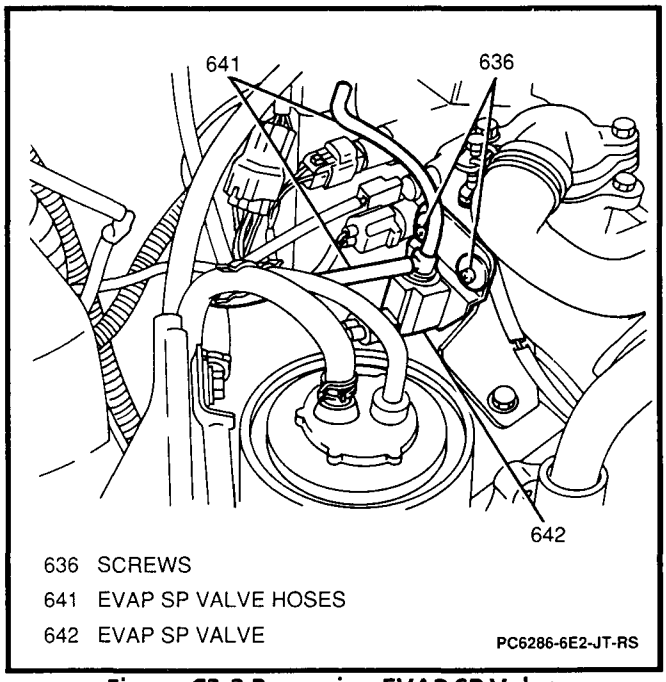

Figure C3-3 Removing EVAP SP Valve

3. Two vacuum hoses from EVAP SP valve (Figure C3-3).
4. Two screws and EVAP SP valve from intake manifold (Figure C3-3).

Install or Connect

1. EVAP SP valve to intake manifold; secure with two screws.
2. Two vacuum hoses to EVAP SP valve.
3. EVAP SP valve electrical connector.
4. Negative (-) battery cable.

Tighten

- Negative (-) battery cable-to-negative (-) battery terminal retainer to 15 N·m (11 lb.ft.).

TANK PRESSURE CONTROL (TPC) VALVE
Figure C3-4

Remove or Disconnect

1. Fuel tank from vehicle. Refer to SECTION 6C.
2. Two clamps and fuel vapor hoses from tank pressure control (TPC) valve.
3. Two screws and TPC valve from fuel tank.

Inspect

1. Connect a length of hose to black side of TPC valve (Figure C3-4).
2. Blow into hose; air should pass through the TPC valve.
3. Remove hose from black side and connect it to the orange side of the TPC valve.
4. Blow into hose; air should not pass through the TPC valve.

If the TPC valve does not pass the above tests, replace the TPC valve.

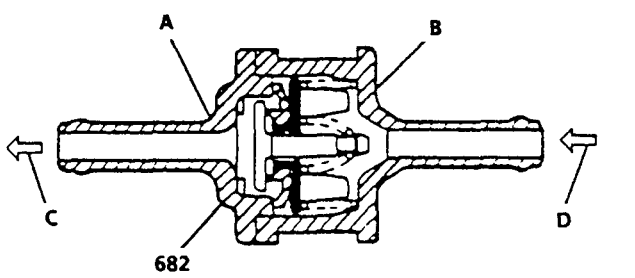

A	ORANGE SIDE	D	FROM FUEL TANK
B	BLACK SIDE	682	TPC VALVE
C	TO EVAP CANISTER		

PC6291-6E2-M-RS

Figure C3-4 Tank Pressure Control (TPC) Valve Check

Install or Connect

1. TPC valve to fuel tank; secure with two screws.
2. Fuel vapor hoses to TPC valve; secure with two clamps.
3. Fuel tank to vehicle. Refer to SECTION 6C.

SPECIFICATIONS

FASTENER TIGHTENING SPECIFICATIONS

EVAP Canister Bolts	15 N·m (11 lb.ft.)
Negative (-) Battery Cable-to-Negative (-) Battery Terminal Retainer	15 N·m (11 lb.ft.)

SERVICE PARTS INFORMATION

Component Name Used in Section 6E2-C3	Reference Name in Service Parts Catalog	Group Number
Evaporative Emission (EVAP) Canister	Canister, Fuel Vpr	3.130
Evaporative Emission Solenoid Purge (EVAP SP) Valve	Valve, Fuel Vpr Line Check	3.130
Tank Pressure Control (TPC) Valve	Valve, 2-Way Check	3.130

BLANK

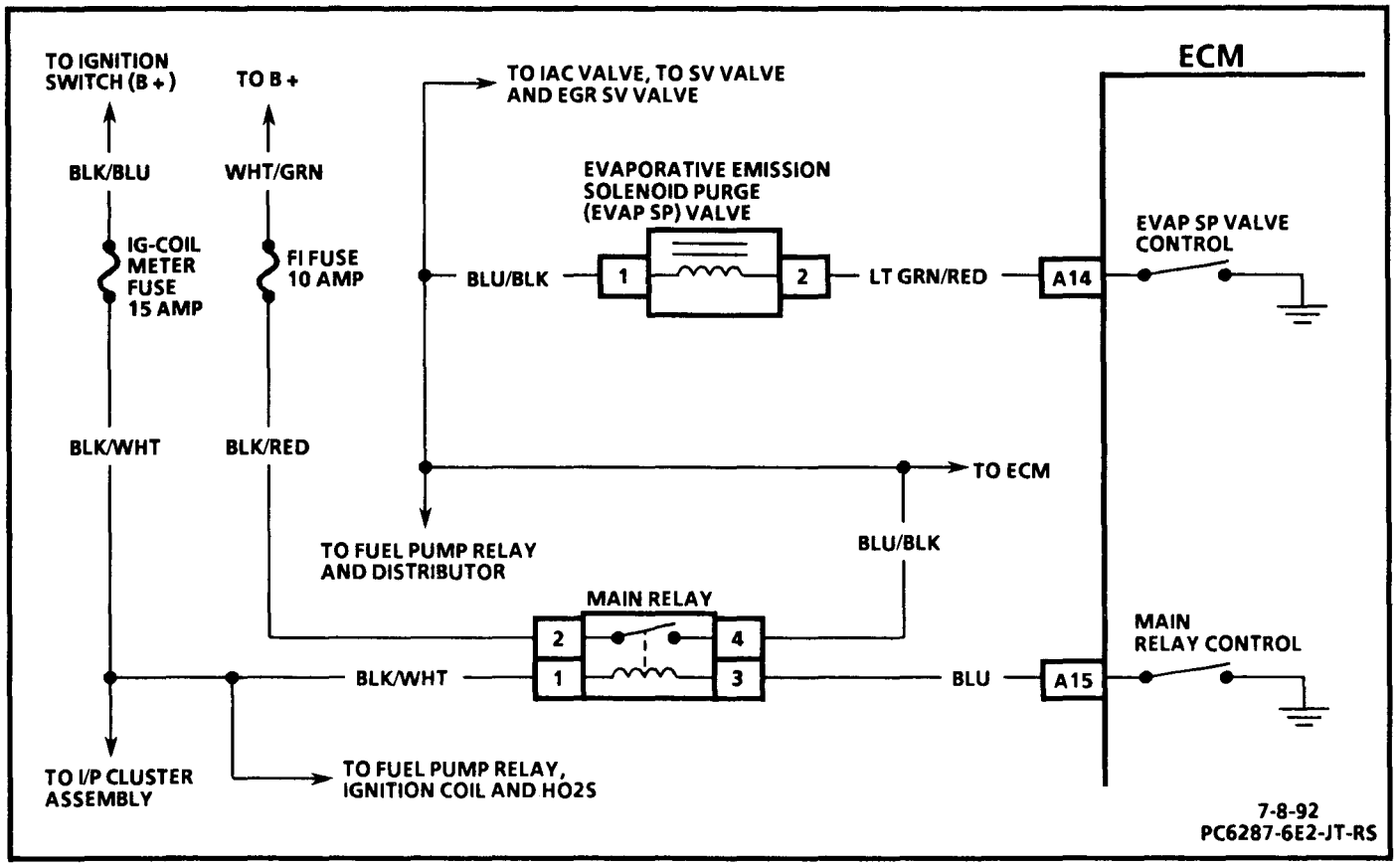

CHART C-3

EVAPORATIVE EMISSION SOLENOID PURGE (EVAP SP) VALVE CHECK 1.6L (VIN U) "E/J" TRUCK

Circuit Description:

Evaporative emission (EVAP) canister purge is controlled by the engine control module (ECM) and an EVAP solenoid purge (SP) valve. The ECM supplies a ground to the EVAP SP valve when it becomes necessary to purge the EVAP canister. The ECM controls the purging when the following conditions are met:

- Engine rpm is above 1,500 rpm.
- Engine coolant temperature (ECT) is above 60°C (140°F).
- Vehicle speed is above 24 kph (15 mph).

Test Description:

Number(s) below refer to circled number(s) on the diagnostic chart.

1. Checks to see if the EVAP SP valve is open or closed. The EVAP SP valve should be closed.
2. Checks to determine if the EVAP SP valve was open due to an electrical failure or a mechanical failure.
3. This should normally energize the EVAP SP valve which should allow vacuum to drop.
4. Checks for an open in the BLU/BLK wire or for a faulty EVAP SP valve.
5. Checks for leaking or restricted vacuum hoses.

Diagnostic Aids:

Make a visual check of vacuum hoses. Check the TBI unit for any restrictions or leaks.

CHART C-3

EVAPORATIVE EMISSION SOLENOID PURGE (EVAP SP) VALVE CHECK 1.6L (VIN U) "E/J" TRUCK

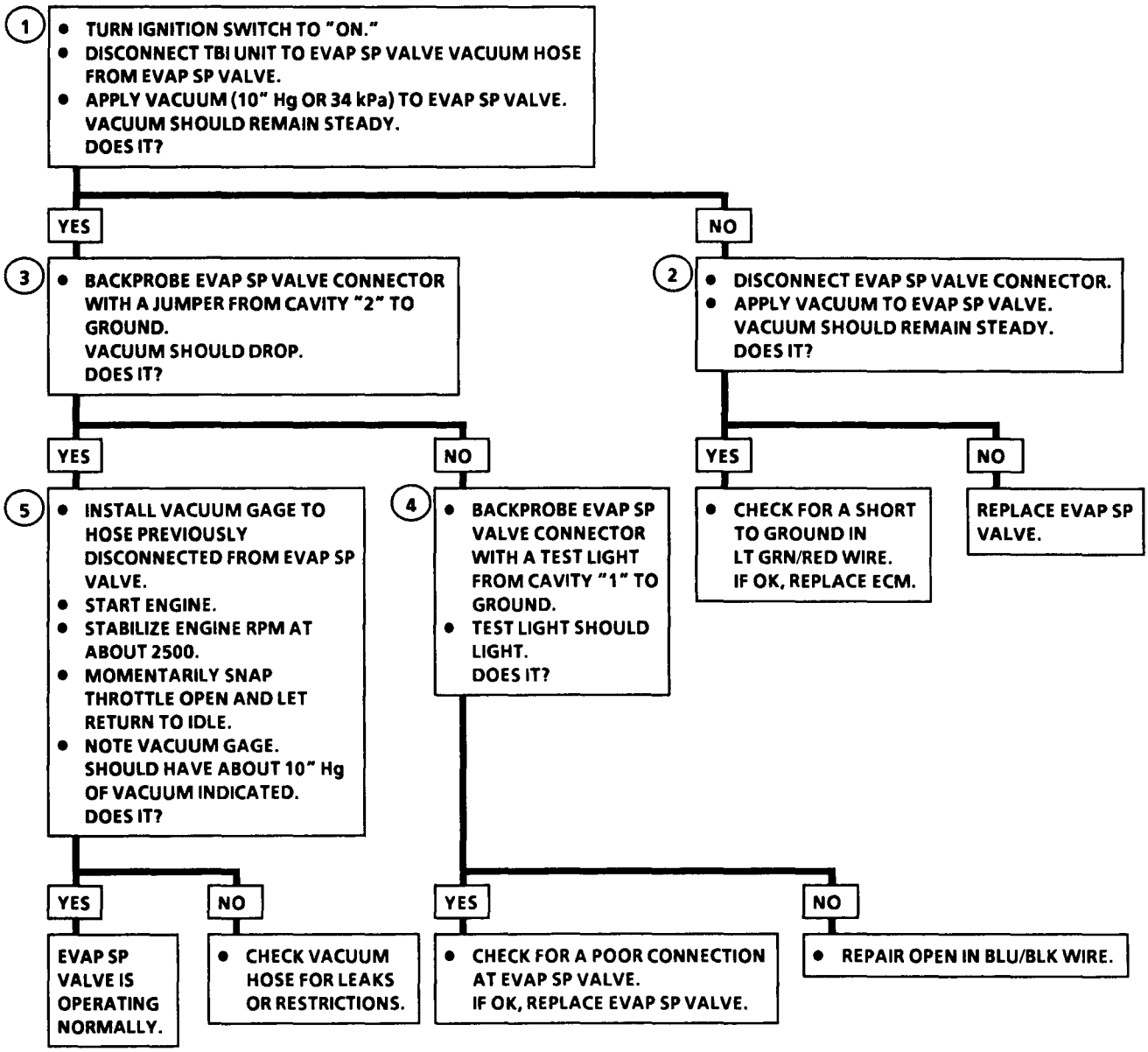

7-9-92
PC6288-6E2-JT-RS

BLANK

SECTION C4
IGNITION SYSTEM
CONTENTS

General Description 6E2-C4-1
Ignition System 6E2-C4-1
On-Vehicle Service 6E2-C4-2
Ignition Timing 6E2-C4-2

GENERAL DESCRIPTION

IGNITION SYSTEM
Figures C4-1

The ignition system used for this vehicle has an ESA (Electronic Spark Advance) system (Figure C4-1) and consists of the following parts.

- Engine Control Module (ECM)
  It detects the engine condition through the signals from the sensors, determines the most suitable ignition timing and time for electricity to flow through the primary coil and sends a signal to the igniter.
- Igniter (power unit)
  It turns "ON" and "OFF" the primary current of the ignition coil according to the signal from ECM.
- Ignition coil
  When the ignition coil primary current is turned "OFF," a high voltage is induced in the secondary winding.

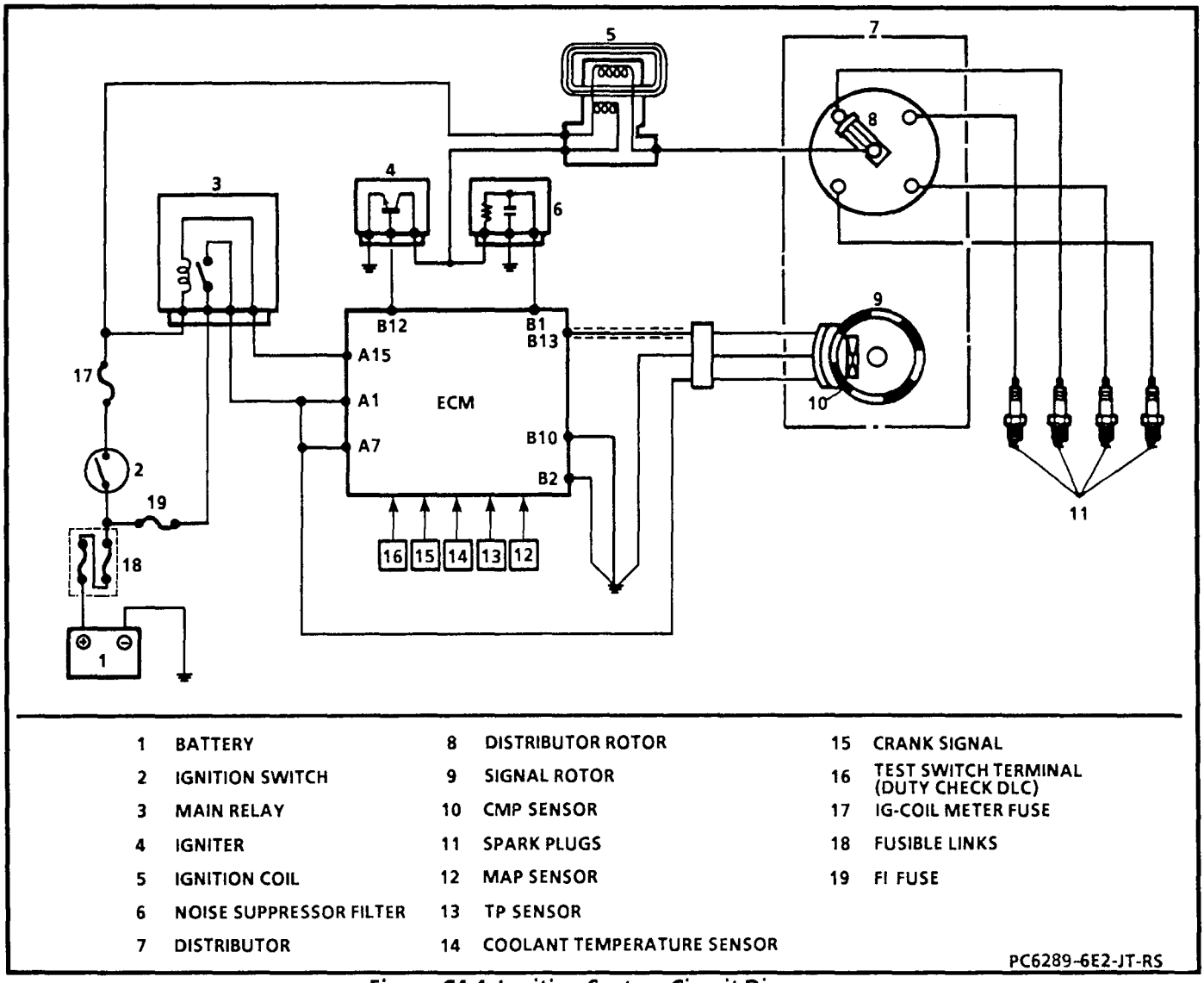

Figure C4-1 Ignition System Circuit Diagram

- Distributor
  It distributes a high voltage current to each plug.
- Secondary (spark plug) wires and spark plugs.
- Camshaft position (CMP) sensor
  Located in the distributor, it converts the crank angle into voltage variation and sends it to the ECM. For its details, refer to SECTION 6D4.

In ESA system, the ECM is programmed for the best ignition timing under every engine condition. Receiving signals which indicate the engine condition from the sensors, e.g., engine revolution, intake air volume, engine coolant temperature, etc., it selects the most suitable ignition timing from its memory and operates the igniter; thus ignition timing is controlled to yield the best engine performance.

ON-VEHICLE SERVICE

Refer to SECTION 6D4 for ignition system component replacement procedures.

IGNITION TIMING
Figures C4-2 through C4-4

Inspect

Adjust

1. Start engine and warm it up to normal operating temperature.
2. Stop engine, but keep ignition switch in the "ON" position for 5 seconds and then start engine again.
3. Run engine at 2,000 r/min for 5 minutes so that it is fully warmed and then keep it running at idle speed.
4. Make sure that:
   - All of electrical loads (wipers, radio, headlights, defogger and blower) are switched off.
   - A/C is "OFF," if equipped.
   - Gearshift control lever is set in neutral (manual transmission) or manual selector lever is in "P" (automatic transmission).
   - Parking brake lever is engaged fully.
5. Check to be sure that idle speed is within specification. Refer to SECTION 6E2-C2.
6. Connect a timing light to No. 1 high tension cord.
7. Remove cap from duty check data link connector (DLC) located next to the battery.
8. Connect a jumper from duty check DLC cavity "3" to cavity "4" (Figure C4-2).

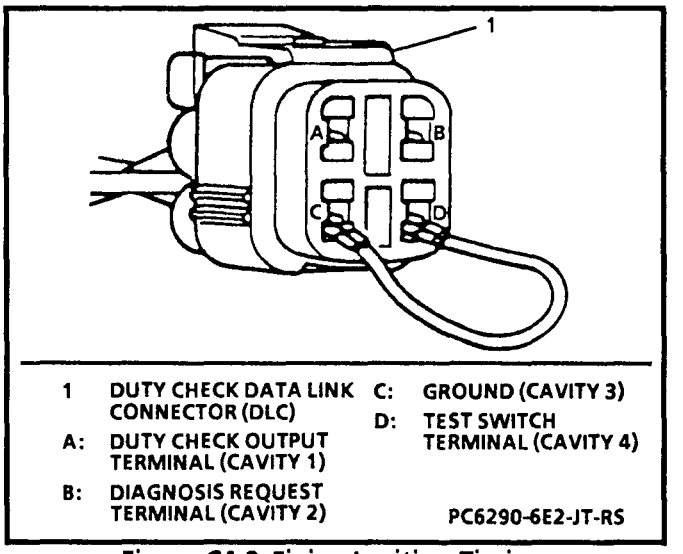

Figure C4-2 Fixing Ignition Timing

NOTICE: In this state, ignition timing is fixed.

9. Check timing, should be 8°+ or -1° at 800 rpm (Figure C4-3).

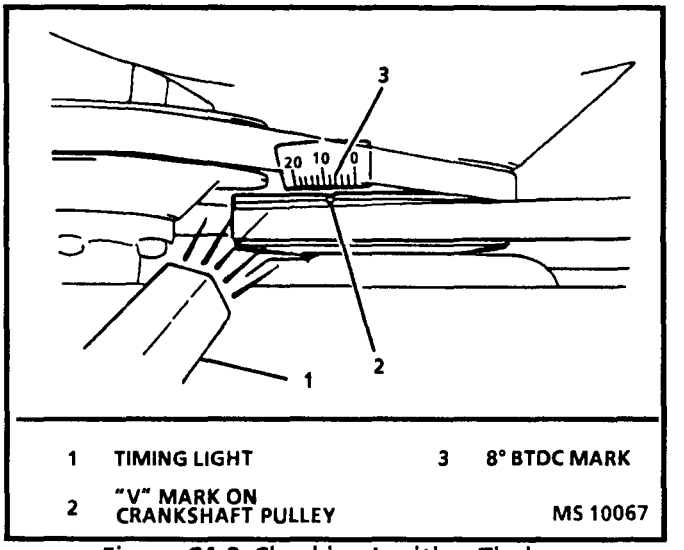

Figure C4-3 Checking Ignition Timing

10. If not within specification, loosen distributor hold down bolt and rotate distributor and repeat until timing is within specifications (Figure C4-4).

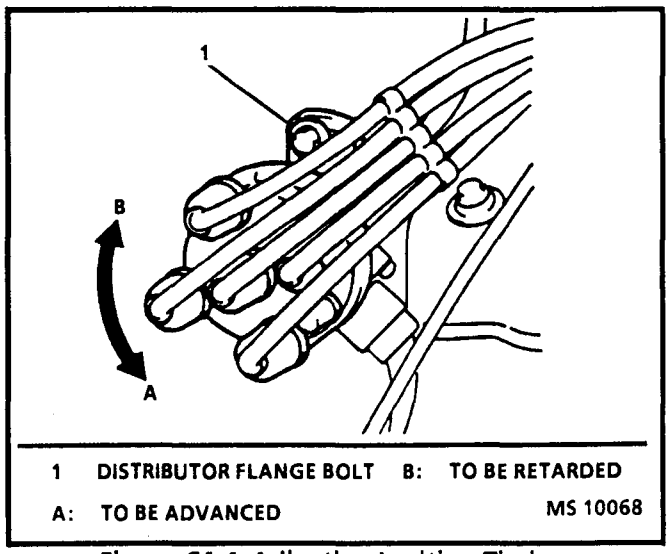

Figure C4-4 Adjusting Ignition Timing

11. Remove jumper from duty check DLC. Make sure that timing is within specifications.

BLANK

SECTION C7
EXHAUST GAS RECIRCULATION (EGR) SYSTEM
CONTENTS

General Description 6E2-C7-1
Purpose 6E2-C7-1
Operation 6E2-C7-1
Results of Incorrect EGR System Operation 6E2-C7-3
On-Vehicle Service 6E2-C7-3
EGR Valve 6E2-C7-3
System Diagnosis 6E2-C7-3
Vacuum Hoses 6E2-C7-4
EGR Modulator 6E2-C7-4
EGR Solenoid Vacuum (SV) Valve Circuit 6E2-C7-5
EGR Manifold Passage 6E2-C7-5
Specifications 6E2-C7-6
Service Parts Information 6E2-C7-6
Chart C-7 Exhaust Gas Recirculation (EGR) System Check 6E2-C7-8

GENERAL DESCRIPTION

PURPOSE

The exhaust gas recirculation (EGR) system is used to lower NOx (oxides of nitrogen) emission levels caused by high combustion temperature. It does this by decreasing combustion temperature.

The main element of the system is the EGR valve operated by vacuum and mounted on the intake manifold.

The EGR valve feeds small amounts of exhaust gases back into the combustion chamber as shown in Figure C7-1.

OPERATION
Figure C7-1

This system controls the formation of NOx emission by recirculating the exhaust gas into the combustion chamber through the intake manifold.

The exhaust gas recirculation (EGR) valve operation is controlled by the engine control module (ECM). The ECM uses an EGR solenoid vacuum (SV) valve to control vacuum to the EGR modulator, then to the EGR valve itself. The EGR valve is turned "ON" when the ECM senses various inputs from engine sensors.

The diaphragm mounted in the EGR modulator is operated by backpressure of the exhaust gas to open and close the valve. By this opening and closing action of the valve, the EGR modulator controls the vacuum transmitted to the EGR valve.

Under a low load condition such as low speed driving, the exhaust pressure is low. In this state, the diaphragm in the EGR modulator is pushed down by the spring force and the modulator valve opens to allow air into the vacuum passage from the outside.

As a result, the vacuum transmitted to the EGR valve becomes smaller and so does the opening of the EGR valve. Thus, less amount of exhaust gas is recirculated to the intake manifold.

Under a high load condition such as high speed driving, the exhaust pressure is high. By the high exhaust pressure, the diaphragm in the modulator is pushed up and closes the valve. As the air does not enter the vacuum passage in this state, the vacuum transmitted to the EGR valve grows larger and so does the opening of the EGR valve. Thus, larger amount of exhaust gas is recirculated to the intake manifold.

Under any one of the following conditions, the ECM closes the vacuum passage of the EGR SV valve. In this state, as the vacuum is not transmitted to the EGR valve; it remains closed.

- When engine coolant temperature (ECT) is low.
- When engine is running at high speed (higher than 6,000 rpm).
- When barometric pressure is low (at high altitude).
- When engine is running at high load.
- When transmission is in lock-up condition (automatic transmission).

Other than the above, the EGR valve opens and closes in accordance with the EGR modulator operation.

- On vehicles with California emissions, the operation of EGR valve is monitored by ECM through the input from the exhaust gas recirculation (EGR) temperature sensor. The EGR temperature sensor measures the temperature in the exhaust gas passage. Should anything abnormal occur, the malfunction indicator lamp (MIL) turns "ON" to warn the driver.

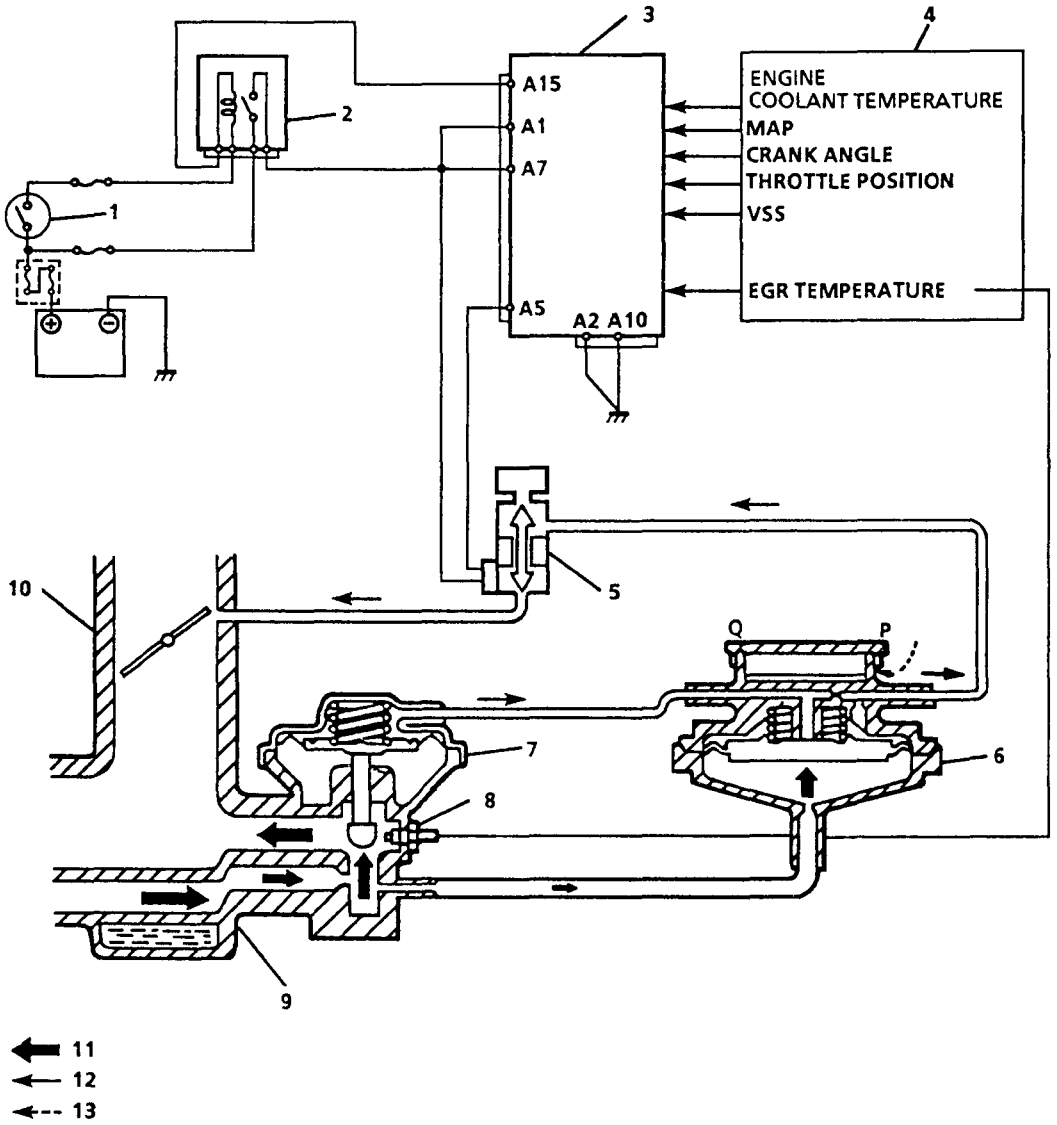

1	IGNITION SWITCH
2	MAIN RELAY
3	ECM
4	SENSED INFORMATION
5	EGR SV VALVE
6	EGR MODULATOR
7	EGR VALVE
8	EGR TEMPERATURE SENSOR (CALIFORNIA)
9	INTAKE MANIFOLD
10	THROTTLE BODY
11	EXHAUST GAS
12	VACUUM
13	AIR

PC6291-6E2-JT-RS

Figure C7-1 EGR System

RESULTS OF INCORRECT EGR SYSTEM OPERATION

Too much exhaust gas recirculation (EGR) flow tends to weaken combustion, causing the engine to run roughly or stop. With too much EGR flow at idle, cruise, or cold operation, any of the following conditions may happen:

- Engine stops after cold start.
- Engine stops at idle after deceleration.
- Vehicle surges during cruise.
- Rough idle.

If the EGR valve should stay open all of the time, the engine may not idle.

Too little or no EGR flow allows combustion temperatures to get too high during acceleration and load conditions. This could cause:

- Spark knock (detonation).
- Engine overheating.
- Emission test failure.

ON-VEHICLE SERVICE

EGR VALVE
Figures C7-2 and C7-3

NOTICE: Before inspecting exhaust gas recirculation (EGR) system be sure to confirm the following:

- Altitude is 8,200 feet above sea level or lower and barometer is greater than 585 mm Hg.
- Engine coolant temperature (ECT) sensor, throttle position (TP) sensor, vehicle speed sensor (VSS) and manifold absolute pressure (MAP) sensor are not malfunctioning. If one of the above inputs is not present, the EGR system will not operate.

Inspect

1. When engine is cool (ECT is below 58°C [136°F]) start engine and raise engine speed above 3,500. Check EGR valve diaphragm and ensure that there is no movement (Figure C7-2).

   NOTICE: Before inspection, check to make sure that gearshift control lever is in neutral position (manual transmission) or manual selector lever is in "P" (automatic transmission).

   CAUTION: If EGR valve is hot, it may be necessary to wear gloves to avoid burning fingers.

2. Warm up engine to normal operating temperature and raise engine speed above 3,500. Check the diaphragm to ensure that it moves forward (Figure C7-3) during acceleration and backward during deceleration.
3. Keep engine running at idle speed and open EGR valve by hand, and engine should either stop or reduce its speed. If neither occurs, EGR passage is clogged and must be cleaned.

System Diagnosis

If exhaust gas recirculation (EGR) valve fails to operate properly, any of the following areas could be the cause:

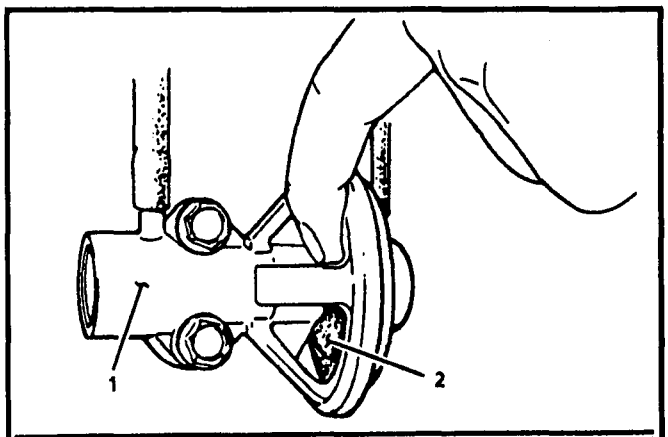

1 EGR VALVE
2 DIAPHRAGM
IS 0278

Figure C7-2 Checking EGR Valve Diaphragm

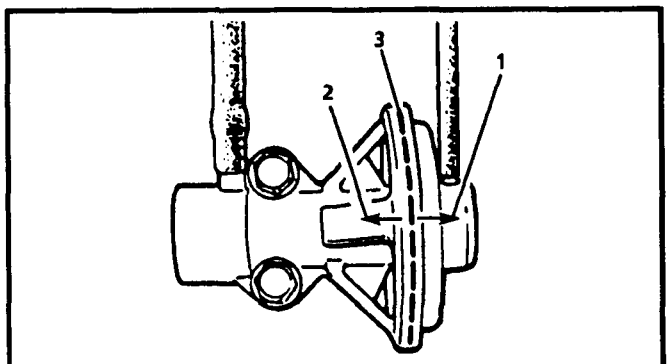

1 DURING ACCELERATION
2 DURING DECELERATION
3 DIAPHRAGM
IS 0280

Figure C7-3 Movement of EGR Valve Diaphragm

- Vacuum hoses.
- EGR valve.
- EGR modulator.
- EGR solenoid vacuum (SV) valve.

Vacuum Hoses

Inspect

- Hoses for connection, leakage, clog and deterioration. Replace as necessary.

EGR Valve
Figure C7-4

Inspect

1. Disconnect vacuum hose from EGR modulator or from EGR solenoid vacuum (SV) valve.
2. Connect vacuum pump to its hose (Figure C7-4).
3. EGR valve diaphragm that it moves smoothly and that it is held at the same position when more than 20 cm/Hg vacuum is applied to EGR valve.
   If diaphragm doesn't move smoothly, or it isn't held at the same position, replace EGR valve.

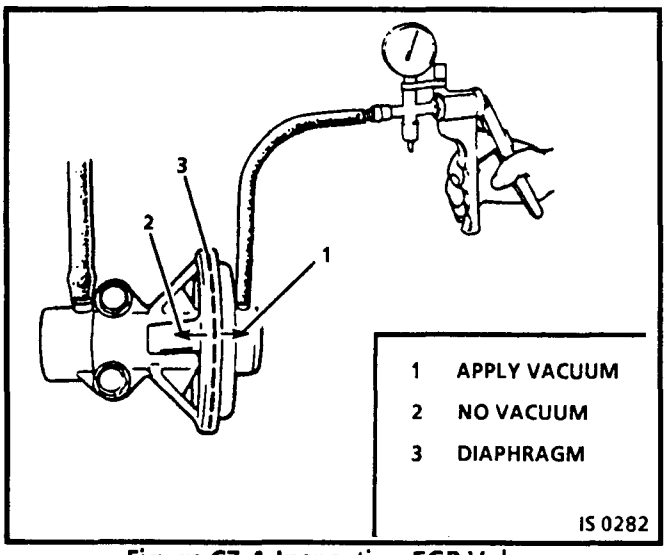

Figure C7-4 Inspecting EGR Valve

EGR MODULATOR
Figures C7-5 through C7-7

Inspect

- Filter for contamination and damage (Figure C7-5).
  (Clean filter, using compressed air.)
- Remove exhaust gas recirculation (EGR) modulator and plug nozzle with your finger. Blow air into another nozzle and check that air passes through to air filter side freely (Figure C7-6).

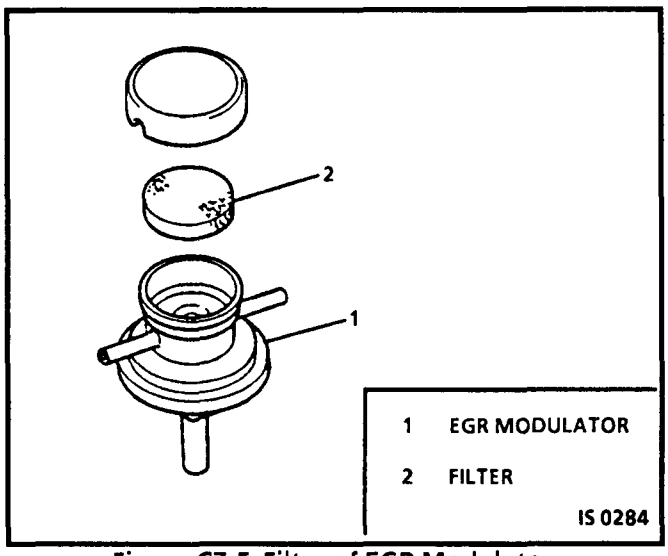

Figure C7-5 Filter of EGR Modulator

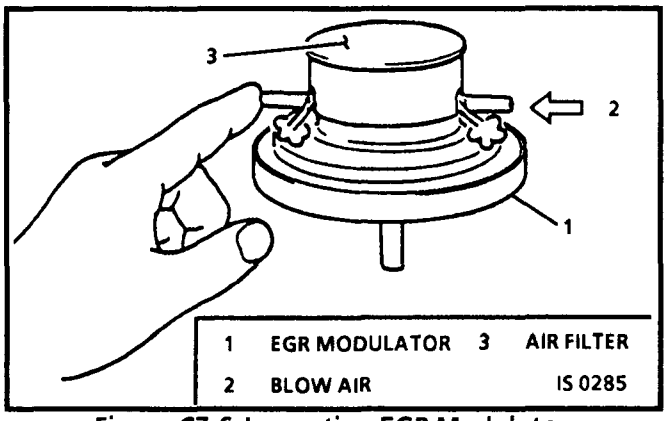

Figure C7-6 Inspecting EGR Modulator

- Vacuum pump to nozzle "P" and plug nozzle "Q" with your finger.
  While blowing air into nozzle "A," operate vacuum pump and check that vacuum is applied to modulator (Figure C7-7).

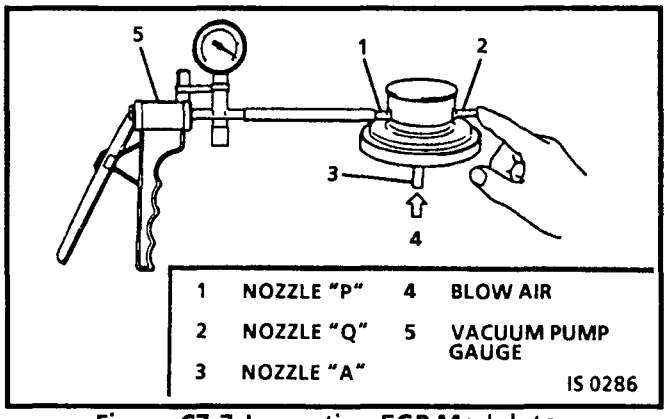

Figure C7-7 Inspecting EGR Modulator

EGR SOLENOID VACUUM (SV) VALVE CIRCUIT
Figures C7-8 and C7-9

Remove or Disconnect

- Vacuum hoses from exhaust gas recirculation (EGR) valve (or EGR modulator) and TBI unit.

Inspect

- With ignition switch in the "OFF" position, blow into hose "A." Air should come out of hose "B" and not out of filter (Figure C7-8).
  If otherwise, the EGR solenoid vacuum (SV) valve is defective.
- Turn ignition switch to "ON." Backprobe EGR SV valve connector with a fused jumper from cavity "2" (LT GRN/YEL wire) to ground. Blow into hose "A." Air should come out of filter and not out of hose "B" (Figure C7-9). If otherwise, the EGR SV valve is defective.

Install or Connect

- Vacuum hoses securely.

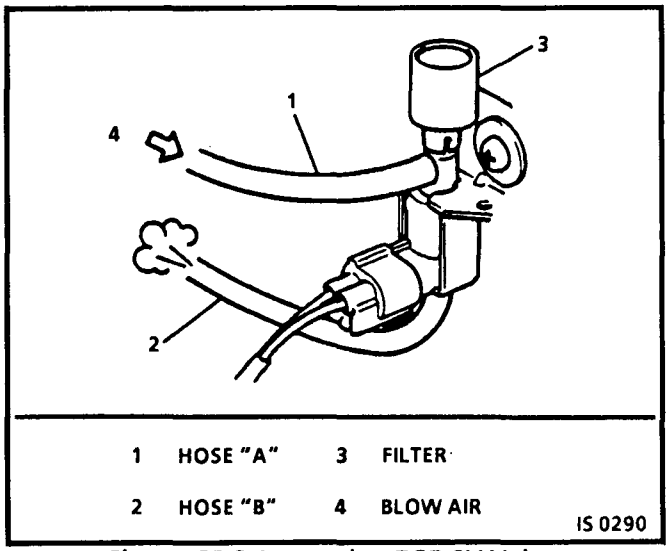

Figure C7-8 Inspecting EGR SV Valve

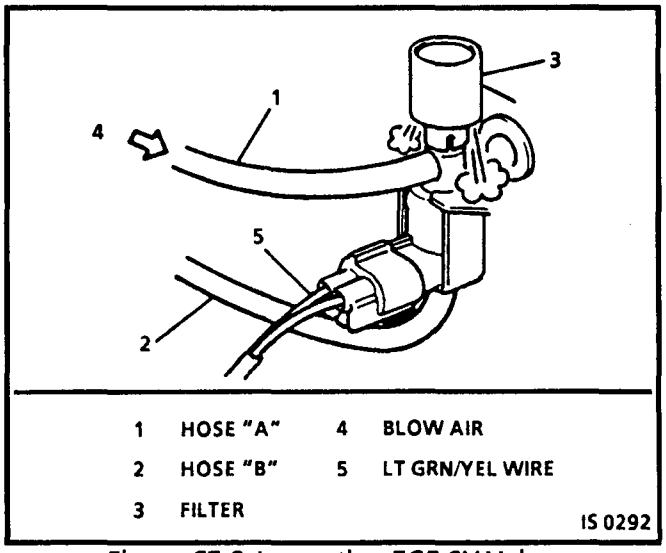

Figure C7-9 Inspecting EGR SV Valve

EGR MANIFOLD PASSAGE

Inspect

If exhaust gas recirculation (EGR) passages in the inlet manifold indicate excessive buildup of deposits, the passages should be cleaned. Care should be taken to ensure that all loose particles are completely removed to prevent them from clogging the EGR valve or from being ingested into the engine.

Clean

1. With a wire wheel, buff the exhaust deposits from the mounting surface and around the valve.
2. Look for exhaust deposits in the valve outlet. Remove deposit buildup with a screwdriver.
3. Clean mounting surfaces of intake manifold and valve assembly.

SPECIFICATIONS

SERVICE PARTS INFORMATION

Component Name Used in Section 6E2-C7	Reference Name in Service Parts Catalog	Group Number
Exhaust Gas Recirculation (EGR) Valve	Valve, Egr	3.670
Exhaust Gas Recirculation (EGR) Modulator	Modulator, Egr Vac	3.670
Exhaust Gas Recirculation (EGR) Solenoid Vacuum (EGR SV) Valve	Valve, Egr Vlv Vac	3.670

BLANK

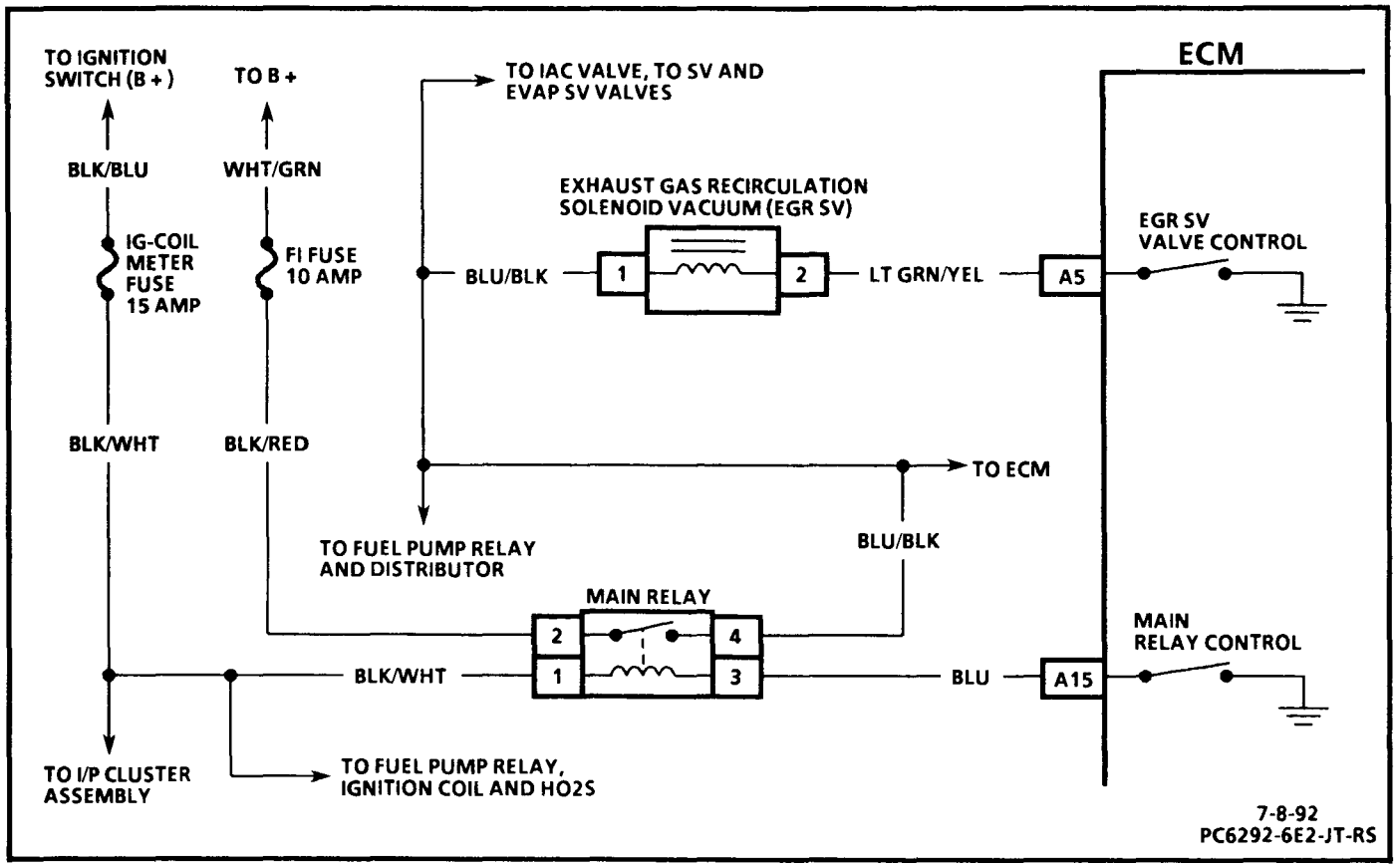

CHART C-7

EXHAUST GAS RECIRCULATION (EGR) SYSTEM CHECK 1.6L (VIN U) "E/J" TRUCK

Circuit Description:

The exhaust gas recirculation solenoid vacuum (EGR SV) valve solenoid is controlled by the engine control module (ECM). The EGR SV valve solenoid is supplied with battery voltage and the ECM will switch to ground to turn the solenoid "ON" for EGR.

The EGR SV valve allows exhaust gases to enter the intake manifold under high load conditions.

Test Description:

Number(s) below refer to circled number(s) on the diagnostic chart.

1. This test checks that the EGR valve is mechanically functional.
2. This test checks that vacuum is available to operate the EGR valve.
3. This test checks the EGR valve movement.
4. This test checks for a short to ground in LT GRN/YEL wire or a faulty ECM.
5. This test checks for a faulty EGR SV valve or a faulty ECM.

Diagnostic Aids:

Be sure to check hoses for proper vacuum supply, plugged, kinked or deteriorated hoses.

CHART C-7

EXHAUST GAS RECIRCULATION (EGR) SYSTEM CHECK 1.6L (VIN U) "E/J" TRUCK (TBI)

- GRASP TOP OF EGR VALVE AND CHECK FOR LOOSENESS. IS LOOSENESS FELT?

NO → (1)

YES → REPLACE EGR VALVE.

(1)
- DISCONNECT VACUUM HOSE FROM EGR VALVE.
- CONNECT HAND VACUUM PUMP TO EGR VALVE.
- START ENGINE AND ALLOW IT TO IDLE.
- APPLY 10" Hg VACUUM TO EGR VALVE. DOES EGR VALVE HOLD VACUUM?

YES → DID THE APPLICATION OF VACUUM CAUSE ROUGH IDLING OR STALLING?

NO → REPLACE EGR VALVE.

YES → (2)

NO →
- STOP ENGINE.
- APPLY AND RELEASE VACUUM TO EGR VALVE WHILE TOUCHING UNDERSIDE OF EGR VALVE DIAPHRAGM. DOES IT MOVE?

YES → CLEAN EGR PASSAGES AND/OR EGR VALVE.

NO → REPLACE EGR VALVE.

(2)
- DISCONNECT HAND VACUUM PUMP FROM EGR VALVE.
- RECONNECT EGR VACUUM HOSE TO EGR VALVE.
- DISCONNECT VACUUM HOSE FROM EGR PORT ON TBI UNIT.
- CONNECT VACUUM GAGE TO EGR PORT.
- INCREASE ENGINE SPEED TO APPROXIMATELY 2000 RPM. IS VACUUM OVER 20" HG?

YES → (3)

NO → INSPECT AND CLEAN OR REPAIR EGR PORT AS NECESSARY.

(3)
- TURN IGNITION SWITCH TO "LOCK."
- DISCONNECT EGR HOSE FROM EGR VALVE TO MODULATOR AND INSTALL HAND VACUUM PUMP.
- APPLY AND RELEASE VACUUM WHILE TOUCHING BACKSIDE OF EGR VALVE EGR DIAPHRAGM. DOES IT MOVE?

YES → (4)

NO → REPLACE EGR VALVE.

(4)
- TURN IGNITION SWITCH TO "ON."
- DISCONNECT EGR SV VALVE CONNECTOR.
- CONNECT A TEST LIGHT FROM CONNECTOR CAVITY "1" TO CAVITY "2."
- NOTE TEST LIGHT. DOES IT LIGHT?

NO → (5)

YES →
- CHECK FOR A SHORT TO GROUND IN LT GRN/YEL WIRE. IF OK, REPLACE ECM.

(5)
- RECONNECT EGR SV VALVE CONNECTOR.
- BACKPROBE ECM CONNECTOR C1 WITH A DIGITAL MULTIMETER FROM CAVITY "A5" TO GROUND
- MEASURE VOLTAGE. SHOULD HAVE B+. DOES IT?

NO →
- CHECK FOR AN OPEN IN BLU/BLK AND LT GRN/YEL WIRES. IF OK, REPLACE EGR SV VALVE.

YES →
- PERFORM EGR SV VALVE CIRCUIT TEST EARLIER IN THIS SECTION.
- IF TEST INDICATES NO FAULTS FOUND, AND PROBLEM STILL EXISTS, REPLACE ECM AND RETEST.

7-9-92
PC6293-6E2-JT-RS

BLANK

SECTION C8
TORQUE CONVERTER CLUTCH (TCC) SYSTEM
CONTENTS

General Description 6E2-C8-1
Purpose 6E2-C8-1
Operation 6E2-C8-1
Circuit Description 6E2-C8-1
Diagnosis 6E2-C8-1
On-Vehicle Service 6E2-C8-1
Chart C-8 Torque Converter Clutch (TCC) Relay System Check 6E2-C8-2

GENERAL DESCRIPTION

PURPOSE

The torque converter clutch (TCC) system is designed to eliminate power loss by the converter (slippage) to increase fuel economy. By locking the converter clutch, a more effective coupling to the flywheel is achieved. The converter clutch is operated by an engine control module (ECM) controlled solenoid.

OPERATION

Engagement of the torque converter clutch (TCC) is accomplished by a solenoid operated valve within the transmission. The solenoid is activated when an internal switch in the engine control module (ECM) is grounded. Although the ECM may command the TCC "ON," the converter clutch will not apply until internal transmission fluid pressure requirements are met. Fluid pressure must be below 415 kPa (60 psi).

Before the ECM activates the TCC solenoid, several inputs must be monitored:

- Vehicle Speed — Must be above a certain value before the TCC can be applied.
- Engine Coolant Temperature — The engine coolant temperature (ECT) must be above a certain value before the TCC can be applied.
- Throttle Position (TP) Sensor — After the TCC is applied, during low engine load condition, the ECM uses the information from the throttle position (TP) sensor to release the clutch when the vehicle is accelerating or decelerating at a certain rate.

CIRCUIT DESCRIPTION

The 12 volt power supply for the solenoid in the transmission is provided through a normally closed switch located on the brake pedal linkage. When the brake pedal is depressed (switch open) the power supply to the torque converter clutch (TCC) solenoid is interrupted and the TCC is disengaged regardless of any other conditions.

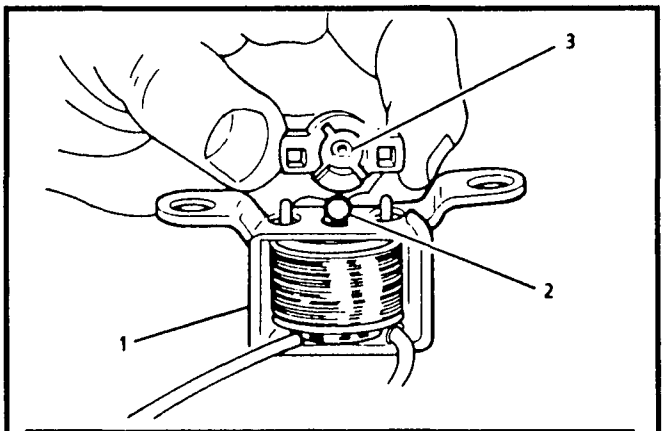

1 TCC SOLENOID 3 CHECK BALL SEAT
2 CHECK BALL
4S 0548-6E

Figure C8-1 TCC Solenoid

When the brake pedal is not depressed (switch closed), battery voltage will be fed to the TCC solenoid. If the engine control module (ECM) has determined that conditions are correct and the fluid pressure is below 415 kPa (60 psi), the circuit from the TCC solenoid will be completed to ground through the ECM and the TCC solenoid will be activated.

DIAGNOSIS

The diagnosis of the torque converter clutch (TCC) system is covered in CHART C-8A. If the engine control module (ECM) detects a vehicle speed sensor (VSS) input problem in the system, the TCC will not apply.

If the ECM doesn't switch the TCC "ON" during driving, sensors such as ECT, VSS and TP should also be checked.

ON-VEHICLE SERVICE

- See SECTION 7A for torque converter clutch (TCC) solenoid service information.

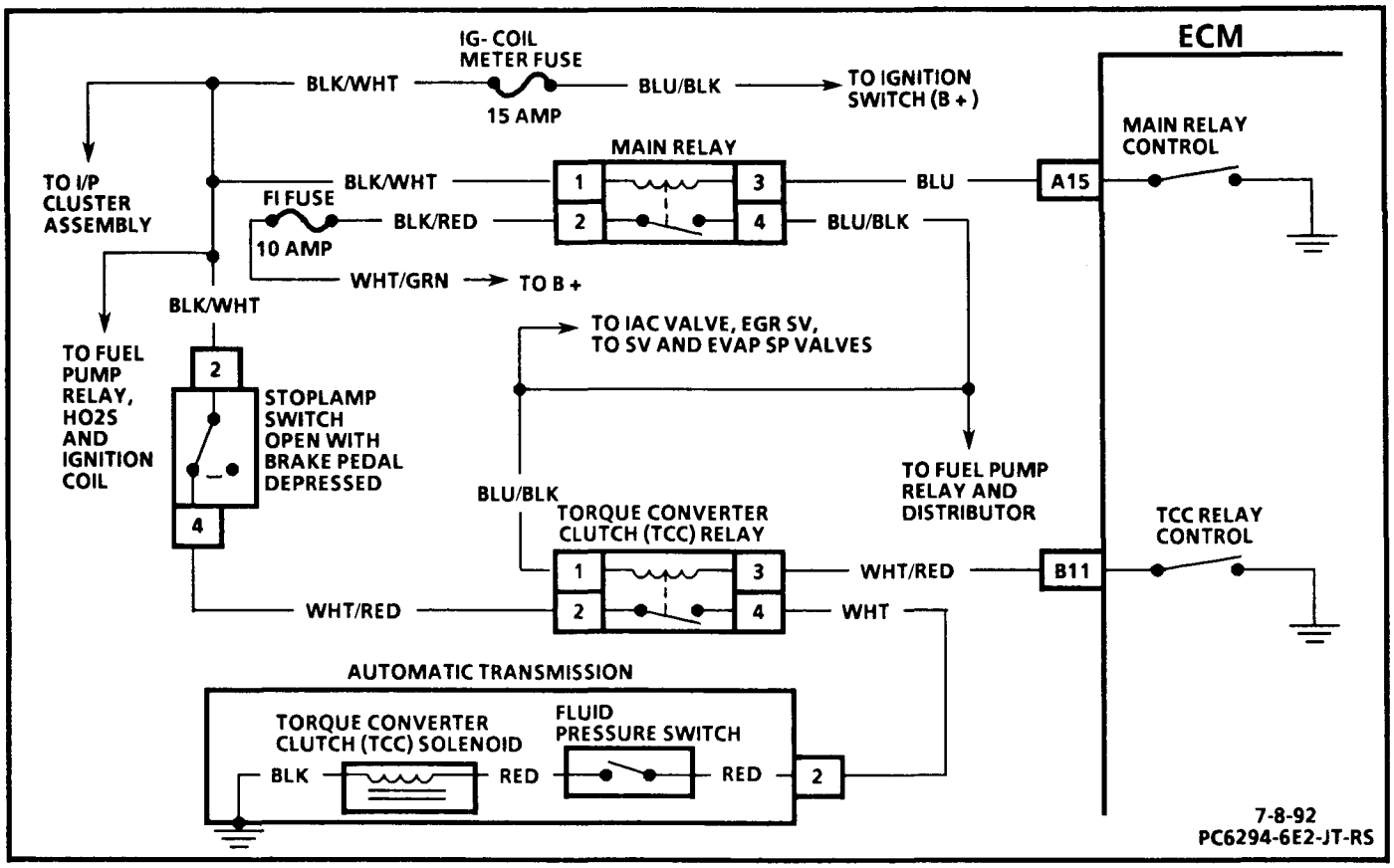

CHART C-8

TORQUE CONVERTER CLUTCH (TCC) RELAY SYSTEM CHECK 1.6L (VIN U) "E/J" TRUCK

Circuit Description:

Based on signals from the throttle position (TP) sensor (throttle opening), the ignition coil, and engine coolant temperature (ECT) sensor, the engine control module (ECM) will provide the ground for the torque converter clutch (TCC) circuit. The TCC (lock-up) solenoid, under control of the stoplamp switch, automatic transmission fluid pressure switch, and the TCC relay, opens and closes the automatic transmission fluid passage to lock and unlock the torque converter clutch. For further description of operation of TCC, see SECTION 7A.

Test Description:

Number(s) below refer to circled number(s) on the diagnostic chart.

1. Checks to see if voltage is supplied to engine control module (ECM) torque converter clutch (TCC) control.
2. Checks for voltage at transmission.
3. Checks for an open or short to ground in WHT/YEL wire.
4. Checks for an open in WHT wire.
5. Checks for a faulty TCC relay or an open in BLU/BLK wire.
6. Checks for a faulty TCC relay.
7. Checks for an open in WHT/RED wire.
8. Checks for power to the stoplamp switch.

Diagnostic Aids:

The torque converter clutch (TCC) will operate only under the following conditions:

1. Throttle valve opening is greater than 7° and less than 62°.
2. Engine coolant temperature is greater than 60°C (140°F).
3. Brake pedal released (switch "ON").
4. Automatic transmission fluid pressure is normal below 415 kPa (60 psi).

CHART C-8

TORQUE CONVERTER CLUTCH (TCC) RELAY SYSTEM CHECK 1.6L (VIN U) "E/J" TRUCK

1
- TURN IGNITION SWITCH TO "LOCK."
- DISCONNECT ECM CONNECTOR C2.
- CONNECT A DIGITAL MULTIMETER FROM CONNECTOR CAVITY "B11" TO GROUND.
- TURN IGNITION SWITCH TO "ON."
- MEASURE VOLTAGE.
  SHOULD BE B+.
  IS IT?

YES →

2
- DISCONNECT TCC TRANSMISSION CONNECTOR.
- CONNECT A TEST LAMP FROM TCC TRANSMISSION CONNECTOR CAVITY "2" TO GROUND.
- BACKPROBE TCC RELAY CONNECTOR WITH A FUSED JUMPER FROM CAVITY "3" TO GROUND.
- NOTE TEST LIGHT.
  TEST LIGHT SHOULD LIGHT.
  DOES IT?

NO →

4
- LEAVE JUMPER CONNECTED AT TCC RELAY.
- BACKPROBE TCC RELAY CONNECTOR WITH A TEST LIGHT FROM CAVITY "4" TO GROUND.
  TEST LIGHT SHOULD LIGHT.
  DOES IT?

NO →

6
- BACKPROBE TCC RELAY CONNECTOR WITH A TEST LIGHT FROM CAVITY "2" TO GROUND.
  TEST LIGHT SHOULD LIGHT.
  DOES IT?

NO →

7
- BACKPROBE STOPLAMP SWITCH CONNECTOR WITH A TEST LIGHT FROM CAVITY "4" TO GROUND.
  TEST LIGHT SHOULD LIGHT.
  DOES IT?

NO →

8
- BACKPROBE STOPLAMP SWITCH CONNECTOR WITH A TEST LIGHT FROM CAVITY "2" TO GROUND.
  TEST LIGHT SHOULD LIGHT.
  DOES IT?

NO →

REPAIR OPEN IN BLK/WHT WIRE.

YES →

- CHECK FOR A POOR CONNECTION AT STOPLAMP SWITCH.
  IF OK, REPLACE STOPLAMP SWITCH.

YES →

- CHECK FOR A POOR CONNECTION AT TCC RELAY.
  IF OK, REPAIR OPEN IN WHT/RED WIRE.

YES →

- CHECK FOR A POOR CONNECTION AT TCC RELAY.
  IF OK, REPLACE TCC RELAY.

YES →

- CHECK FOR A POOR CONNECTION AT TRANSMISSION.
  IF OK, REPAIR OPEN IN WHT WIRE.

YES →

- PERFORM FLUID PRESSURE SWITCH TEST IN SECTION 7A.
  IF OK, AND PROBLEM STILL EXISTS, REPLACE ECM.

NO →

3
- BACKPROBE TCC RELAY CONNECTOR WITH A DIGITAL MULTIMETER FROM CAVITY "3" TO GROUND.
- MEASURE VOLTAGE.
  SHOULD BE B+.
  IS IT?

NO →

5
- BACKPROBE TCC RELAY CONNECTOR WITH A TEST LIGHT FROM CAVITY "1" TO GROUND.
  TEST LIGHT SHOULD LIGHT.
  DOES IT?

NO →

- CHECK FOR A POOR CONNECTION AT TCC RELAY.
  IF OK, REPLACE TCC RELAY.

YES →

- REPAIR OPEN IN BLU/BLK WIRE.

YES →

- REPAIR OPEN OR SHORT TO GROUND IN WHT/YEL WIRE.

7-8-92
PC6295-6E2-JT-RS

BLANK

SECTION C13
POSITIVE CRANKCASE VENTILATION (PCV) SYSTEM

CONTENTS

General Description 6E2-C13-1
Diagnosis 6E2-C13-1
Results of Incorrect Operation 6E2-C13-1
PCV Valve 6E2-C13-1
PCV Hose 6E2-C13-1
On-Vehicle Service 6E2-C13-2
Specifications 6E2-C13-2
Fastener Tightening Specifications .. 6E2-C13-2
Service Parts Information 6E2-C13-2

GENERAL DESCRIPTION

"Blowby gas" is the compressed gas and exploded gas which passes by the piston into the crankcase. Blowby gas contains a large amount of unburned gases such as CO and HC. The positive crankcase ventilation (PCV) system is provided to prevent the blowby gas from being emitted into atmosphere and it operates as follows.

When the vacuum in the intake manifold is low (throttle valve open), the PCV valve is wide open due to its spring force. Thus a large amount of the blowby gas is drawn into the intake manifold.

On the other hand, when the vacuum in the manifold is high, the PCV valve opening is limited due to the high vacuum. Thus the amount of the blowby gas drawn into the intake manifold is small.

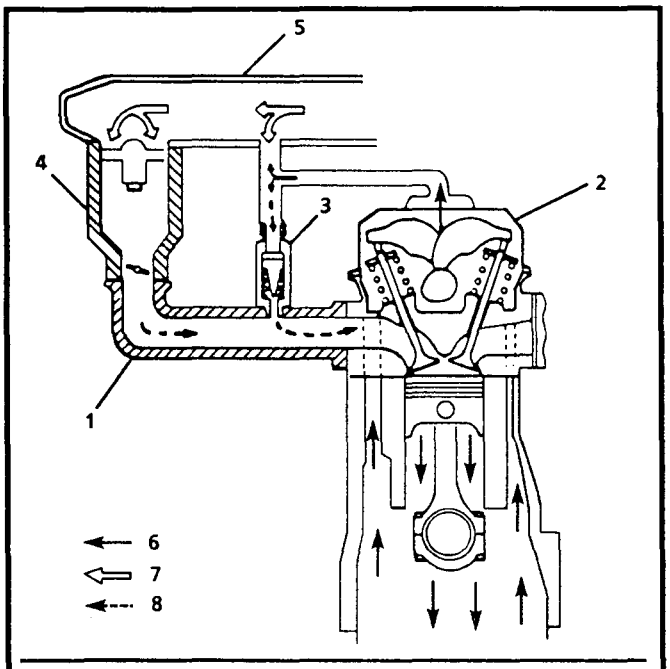

1	INTAKE MANIFOLD	5	AIR INTAKE CASE
2	CYLINDER HEAD COVER	6	BLOW-BY GAS
3	PCV VALVE	7	FRESH AIR
4	THROTTLE BODY	8	BLOW-BY GAS AND FRESH AIR MIXTURE

IS 0408

Figure C13-1 PCV System Operation

DIAGNOSIS

RESULTS OF INCORRECT OPERATION

A plugged valve or hose may cause:
- rough idle
- stalling or slow idle speed
- oil leaks
- oil in air cleaner
- sludge in engine

A leaking valve or hose would cause:
- rough idle
- stalling
- high idle speed

PCV VALVE

Remove or Disconnect
- Positive crankcase ventilation (PCV) hose from PCV valve.
- Rubber insulator from PCV valve.

Inspect
- Run engine at idle.
- Place your finger over the end of the PCV valve to check for vacuum. If there is no vacuum, check for clogged valve. Replace as necessary (Figure C13-2).

NOTICE: If engine is idling rough, this may be caused by a clogged PCV valve or plugged hoses; therefore, never adjust idle speed without first checking PCV valve and hoses.

Install or Connect
- PCV hose to PCV valve.

PCV HOSE

Check hoses for connection, leakage, clog and deterioration. Replace as necessary.

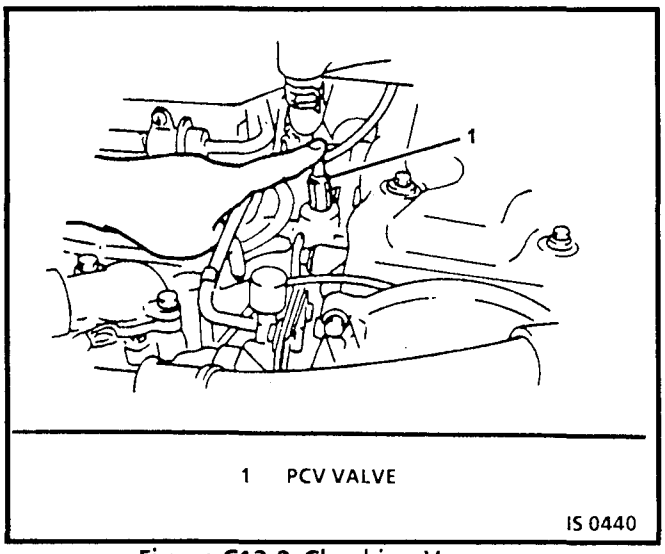

Figure C13-2 Checking Vacuum

ON-VEHICLE SERVICE

An engine which is operated without any crankcase ventilation can be damaged. Therefore, it is important to replace the positive crankcase ventilation (PCV) valve at intervals shown in SECTION 0B.

Periodically inspect the hoses and clamps and replace any showing signs of deterioration.

Remove or Disconnect

1. Negative (-) battery cable.
2. One clamp and PCV hose from PCV valve.
3. Rubber insulator from PCV valve.
4. PCV valve from intake manifold.

Install or Connect

1. PCV valve to intake manifold.
2. Rubber insulator to PCV valve.
3. PCV hose to PCV valve; secure with one clamp.
4. Negative (-) battery cable.

Tighten

- Negative (-) battery cable-to-negative (-) battery terminal retainer to 15 N·m (11 lb. ft.).

SPECIFICATIONS

FASTENER TIGHTENING SPECIFICATIONS

Negative (-) Battery Cable-to-Negative (-) Battery Terminal Retainer	15 N·m (11 lb.ft.)

SERVICE PARTS INFORMATION

Component Name Used in Section 6E2-C13	Reference Name in Service Parts Catalog	Group Number
Positive Crankcase Ventilation (PCV) Hose	Hose, Pcv, Vlv	1.745
Positive Crankcase Ventilation (PCV) Valve	Valve, Pcv	1.745

SECTION	PAGE
A	
A/C Idle-Up Signal	6E2-C1-5
Acceleration Enrichment	6E2-C2-4
Air/Fuel Delivery System	6E2-C2-1
Air/Fuel Ratio Feedback Compensation ("Closed Loop" Operation)	6E2-C2-4
Asynchronous Injection	6E2-C2-3
B	
Backfire	6E2-B-17
Barometric Pressure	6E2-C2-4
Base Air/Fuel Ratio Compensation	6E2-C2-4
C	
Chart A-1 No Malfunction Indicator Lamp (MIL)	6E2-A-14
Chart A-2 Will Not Flash DTC 12 or any DTCs, Malfunction Indicator Lamp (MIL) "ON" Steady	6E2-A-16
Chart A-3 Engine Cranks But Will Not Run	6E2-A-18
Chart A-5 Fuel Injector Circuit Check (Engine No-Start)	6E2-A-20
Chart A-7A Fuel System Diagnosis (Fuel Pump Relay Check)	6E2-A-22
Chart A-7B Fuel System Diagnosis (Fuel Pressure Check)	6E2-A-24
Chart A-7C Fuel System Diagnosis (Fuel Pressure Gage)	6E2-A-28
Chart C-1 Power Steering Pressure (PSP) Switch Check	6E2-C1-14
Chart C-1A Heated Oxygen Sensor (HO2S) Check	6E2-C1-16
Chart C-2 Idle Air Control (IAC) Valve Check	6E2-C2-20
Chart C-2A Throttle Opener Solenoid Vacuum (TO SV) Valve Check	6E2-C2-22
Chart C-3 Evaporative Emission Solenoid Purge (EVAP SP) Valve Check	6E2-C3-6
Chart C-7 Exhaust Gas Recirculation (EGR) System Check	6E2-C7-8
Chart C-8 Torque Converter Clutch (TCC) Relay System Check	6E2-C8-2
Component Locations	6E2-A-2
Crank Signal	6E2-C1-5
Cuts Out, Misses	6E2-B-11
D	
Diagnostic Circuit Check	6E2-A-8
Diagnostic Request Terminal	6E2-C1-6
Dieseling, Run-On	6E2-B-16
Deceleration Enrichment	6E2-C2-4
Detonation/Spark Knock	6E2-B-8
DTC 13 Heated Oxygen Sensor (HO2S) Circuit (Open Circuit)	6E2-A-30
DTC 14 Engine Coolant Temperature (ECT) Sensor Circuit (High Voltage Input)	6E2-A-32
DTC 15 Engine Coolant Temperature (ECT) Sensor Circuit (Low Voltage Input)	6E2-A-34
DTC 21 Throttle Position (TP) Sensor (High Voltage Input)	6E2-A-36
DTC 22 Throttle Position (TP) Sensor (Low Voltage Input)	6E2-A-38
DTC 23 Intake Air Temperature (IAT) Sensor Circuit (High Voltage Input)	6E2-A-40
DTC 24 Vehicle Speed Sensor (VSS) Circuit	6E2-A-42
DTC 25 Intake Air Temperature (IAT) Sensor Circuit (Low Voltage Input)	6E2-A-44
DTC 31 Manifold Absolute Pressure (MAP) Sensor Circuit (High Voltage Input)	6E2-A-46
DTC 32 Manifold Absolute Pressure (MAP) Sensor Circuit (Low Voltage Input)	6E2-A-48
DTC 41 Ignition Signal Circuit (No Signal)	6E2-A-50
DTC 42 Camshaft Position (CMP) Sensor (No Signal For 2 Seconds)	6E2-A-54
DTC 44 Idle Switch Circuit (Circuit Open or Misadjusted)	6E2-A-56
DTC 45 Idle Switch Circuit (Circuit Grounded or Misadjusted)	6E2-A-58
DTC 51 Exhaust Gas Recirculation (EGR) Circuit	6E2-A-60
DTC 53 Ground Circuit (California) (Circuit Open)	6E2-A-62
E	
ECM Connector Terminal End Views	6E2-A-6
ECM Wiring Diagrams	6E2-A-3
Engine Control Module (ECM)	
General Description	6E2-C1-1
On-Vehicle Service	6E2-C1-7
Engine Coolant Temperature (ECT) Sensor	
General Description	6E2-C1-3
On-Vehicle Service	6E2-C1-8
Engine Starting Enrichment	6E2-C2-4
Engine Warm-Up Enrichment	6E2-C2-4

SECTION	PAGE
Evaporative Emission (EVAP) Canister Hoses	6E2-C3-3
Evaporative Emission (EVAP) Canister Replacement	6E2-C3-2
Evaporative Emission (EVAP) Control System	6E2-C3-1
Evaporative Emission Solenoid Purge (EVAP SP) Valve	6E2-C3-3
Excessive Exhaust Emissions or Odors	6E2-B-15
Exhaust Gas Recirculation (EGR) Modulator Replacement	6E2-C7-4
Exhaust Gas Recirculation (EGR) Valve Replacement	6E2-C7-3
Exhaust Gas Recirculation Solenoid Vacuum (EGR SV) Valve Circuit	6E2-C7-5
Exhaust Gas Recirculation (EGR) Temperature Sensor (California)	
General Description	6E2-C1-4
On-Vehicle Service	6E2-C1-12

F

Fail-Safe Function	6E2-C1-2
Fast Idle Air Valve	6E2-C2-8
Fast Idle Air Valve Check	6E2-C2-15
Fuel Cutoff	6E2-C2-4
Fuel Injection Operation	6E2-C2-2
Fuel Injector	
General Description	6E2-C2-7
On-Vehicle Service	6E2-C2-14
Fuel Pressure Regulator	
General Description	6E2-C2-7
On-Vehicle Service	6E2-C2-16
Fuel Pressure Relief Procedure	6E2-C2-10
Fuel Pump Relay	6E2-C2-11
Fuel System Pressure Test	6E2-C2-10

H

Hard Start	6E2-B-5
Heated Oxygen Sensor (HO2S)	
General Description	6E2-C1-2
On-Vehicle Service	6E2-C1-8
Hesitation, Sag, Stumble	6E2-B-10

I

Idle Air Control (IAC) Valve	
General Description	6E2-C2-8
On-Vehicle Service	6E2-C2-17
Idle Speed Adjustment	6E2-C2-8
Ignition Signal	6E2-C1-5
Ignition System	
General Description	6E2-C4-1
On-Vehicle Service	6E2-C4-2
Ignition Timing	6E2-C4-2
Important Preliminary Checks	6E2-B-2
Intake Air Temperature (IAT) Sensor	
General Description	6E2-C1-4
On-Vehicle Service	6E2-C1-11
Intermittents	6E2-B-3

L

Lack of Power, Sluggish or Spongy	6E2-B-7

M

Manifold Absolute Pressure (MAP) Sensor	
General Description	6E2-C1-4
On-Vehicle Service	6E2-C1-11

N

Notes on System Circuit Inspection	6E2-C1-6

P

"P"/"N" Signal	6E2-C1-5
Poor Fuel Economy	6E2-B-14
Positive Crankcase Ventilation (PCV) Valve	6E2-C13-1
Power Enrichment	6E2-C2-4
Power Steering Pressure (PSP) Switch	
General Description	6E2-C1-5
On-Vehicle Service	6E2-C1-12
Precautions in Diagnosing Faults in a TBI System	6E2-C1-5
Precautions in Identifying Diagnostic Trouble Codes (DTCs)	6E2-C1-5

SECTION	PAGE
R	
Rough, Unstable or Incorrect Idle	6E2-B-12
S	
Self-Diagnosis Function	6E2-C1-2
Surges and/or Chuggles	6E2-B-6
Symptom	6E2-B-2
Synchronous Injection	6E2-C2-3
System Voltage Compensation	6E2-C2-4
T	
Tank Pressure Control (TPC) Valve	6E2-C3-4
Tech 1 Data Definitions	6E2-A-11
Test Switch Terminal	6E2-C1-6
Throttle Body Fuel Injection (TBI) Unit	
General Description	6E2-C2-6
On-Vehicle Service	6E2-C2-11
Throttle Opener Adjustment	6E2-C2-9
Throttle Opener Solenoid Vacuum (TO SV) Valve	6E2-C2-17
Throttle Position (TP) Sensor	
General Description	6E2-C1-4
On-Vehicle Service	6E2-C1-9
Throttle Position (TP) Sensor Adjustment	6E2-C1-11
Throttle Position (TP) Sensor Check	6E2-C1-10
Typical Tech 1 Data Values	6E2-A-10
V	
Vehicle Speed Sensor (VSS)	6E2-C1-4
Visual/Physical Check	6E2-B-2

SECTION 6F

EXHAUST SYSTEM

NOTICE: When fasteners are removed, always reinstall them at the same location from which they were removed. If a fastener needs to be replaced, use the correct part number fastener for that application. If the correct part number fastener is not available, a fastener of equal size and strength (or stronger) may be used. Fasteners that are not reused, and those requiring thread-locking compound, will be called out. The correct torque values must be used when installing fasteners that require them. If the above procedures are not followed, parts or system damage could result.

NOTICE: Exhaust system components must have enough clearance from the underbody to prevent overheating of the floor pan and possible damage to the passenger compartment, insulation and trim materials.

CONTENTS

General Description 6F-1
Three Way Catalytic Converter (TWC) 6F-1
Hangers 6F-1
Diagnosis 6F-2
Noise 6F-2
Exhaust System 6F-2
On-Vehicle Service 6F-4
Component Replacement 6F-4
Front Pipe/Three Way Catalytic Converter (TWC) Assembly 6F-5
Muffler/Tail Pipe Assembly 6F-5
Three Way Catalytic Converter (TWC) Support Bracket 6F-6
Specifications 6F-7
Fastener Torques 6F-7
Service Parts Information 6F-7

GENERAL DESCRIPTION

NOTICE: When inspecting or replacing exhaust system components, make sure there is adequate clearance from all points on the underbody to prevent overheating of the floor pan and possible damage to the passenger compartment insulation and trim materials.

Periodic maintenance of the exhaust system is not required; however, if the vehicle is raised for other service, it is advisable to check the general condition of the three way catalytic converter (TWC), pipes and muffler.

Check complete exhaust system and nearby body areas for broken, damaged, missing or mispositioned parts, open seams, holes, loose connections or other deterioration that could permit exhaust fumes to seep into the passenger compartment. Dust or water in the rear compartment may indicate a problem in one of these areas. Any faulty areas should be corrected immediately.

The Geo Tracker exhaust system consists (from front to rear) of an engine exhaust manifold, an exhaust manifold heat shield, a front pipe/TWC assembly and a muffler/tail pipe assembly. Various flexible rubber hangers and supports suspend the system along the underside of the vehicle.

THREE WAY CATALYTIC CONVERTER (TWC)

CAUTION: Prolonged operation with a misfiring or flooded engine may cause the TWC to overheat. This could cause damage either to the catalyst itself or the operating vehicle and possible personal injury.

NOTICE: When jacking or lifting the vehicle from frame side rails, be certain that the lift pads do not contact the TWC; damage to the converter may result. Refer to SECTION 0A for proper vehicle jacking and lifting procedures.

The TWC is an emission control device added to the exhaust system on gasoline engines to reduce pollutants from the exhaust gas stream.

NOTICE: The TWC requires the use of unleaded fuel only. Using leaded fuels may cause damage to the catalyst.

The catalyst is not serviceable; the TWC is serviced as part of the front pipe/TWC assembly.

HANGERS

Important

- The installation of exhaust system components is very important. Improperly installed supports can cause annoying vibrations that can be difficult to diagnose.

The exhaust system is supported along its length by four rubber hangers. The rubber hangers provide a rigid brace along with a feature that continues to support the exhaust system if the rubber insulation breaks.

DIAGNOSIS

NOISE

Rattles and noise vibrations in the exhaust system may be caused by misalignment of system components. When aligning the system, leave all bolts or nuts loose until all parts are properly aligned. After alignment is complete, tighten all fasteners from front to rear.

EXHAUST SYSTEM

Figures 1, 2 and 3

Exhaust system performance complaints, such as excessive back pressure, are noticeable by their effect on engine performance. However, other faulty vehicle components, such as emission control devices, have similar effects on engine performance and may be characterized by the identical symptoms. For further information regarding emission control devices, refer to SECTION 6E.

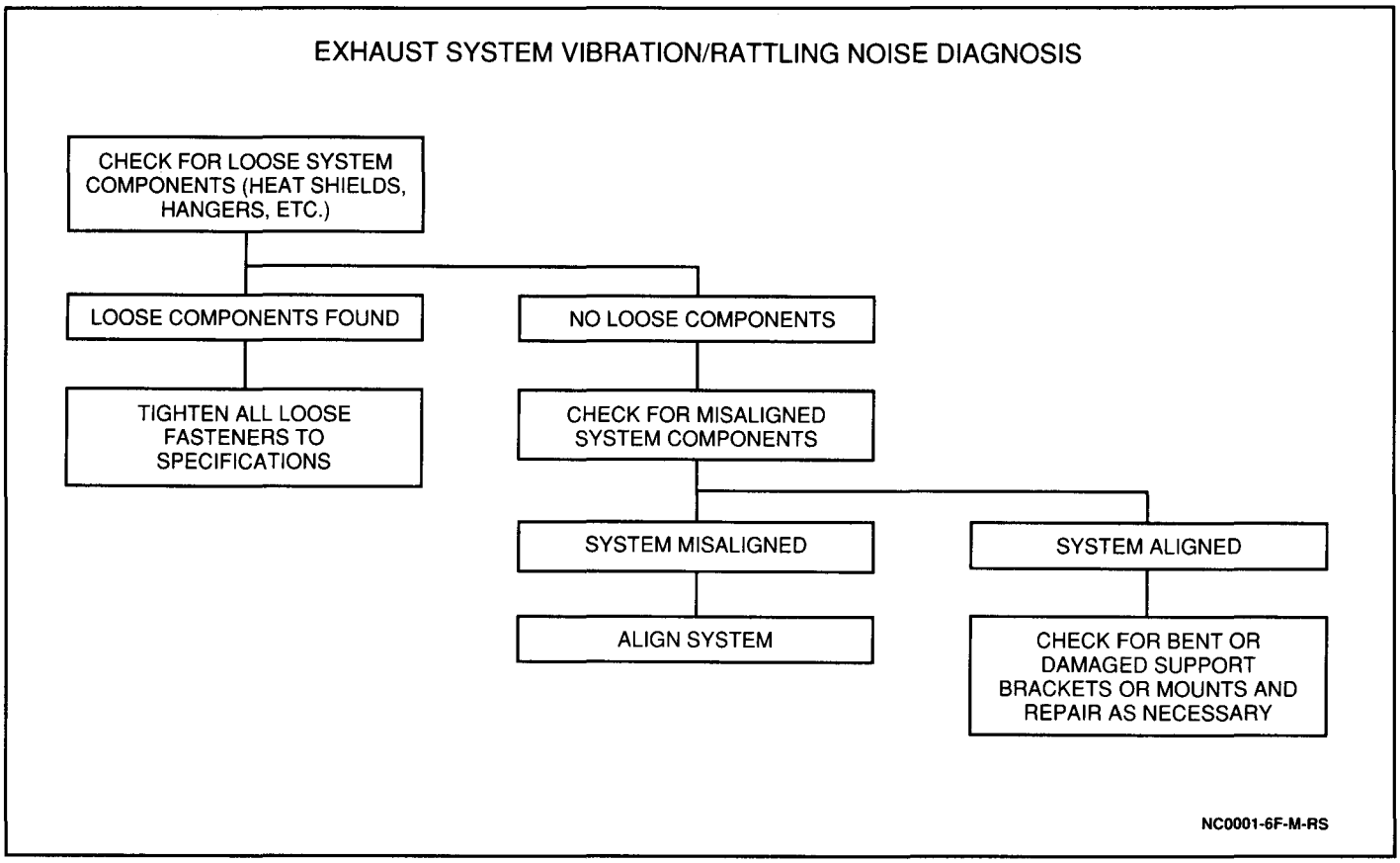

Figure 1 Exhaust System Vibration/Rattling Noise Diagnosis Chart

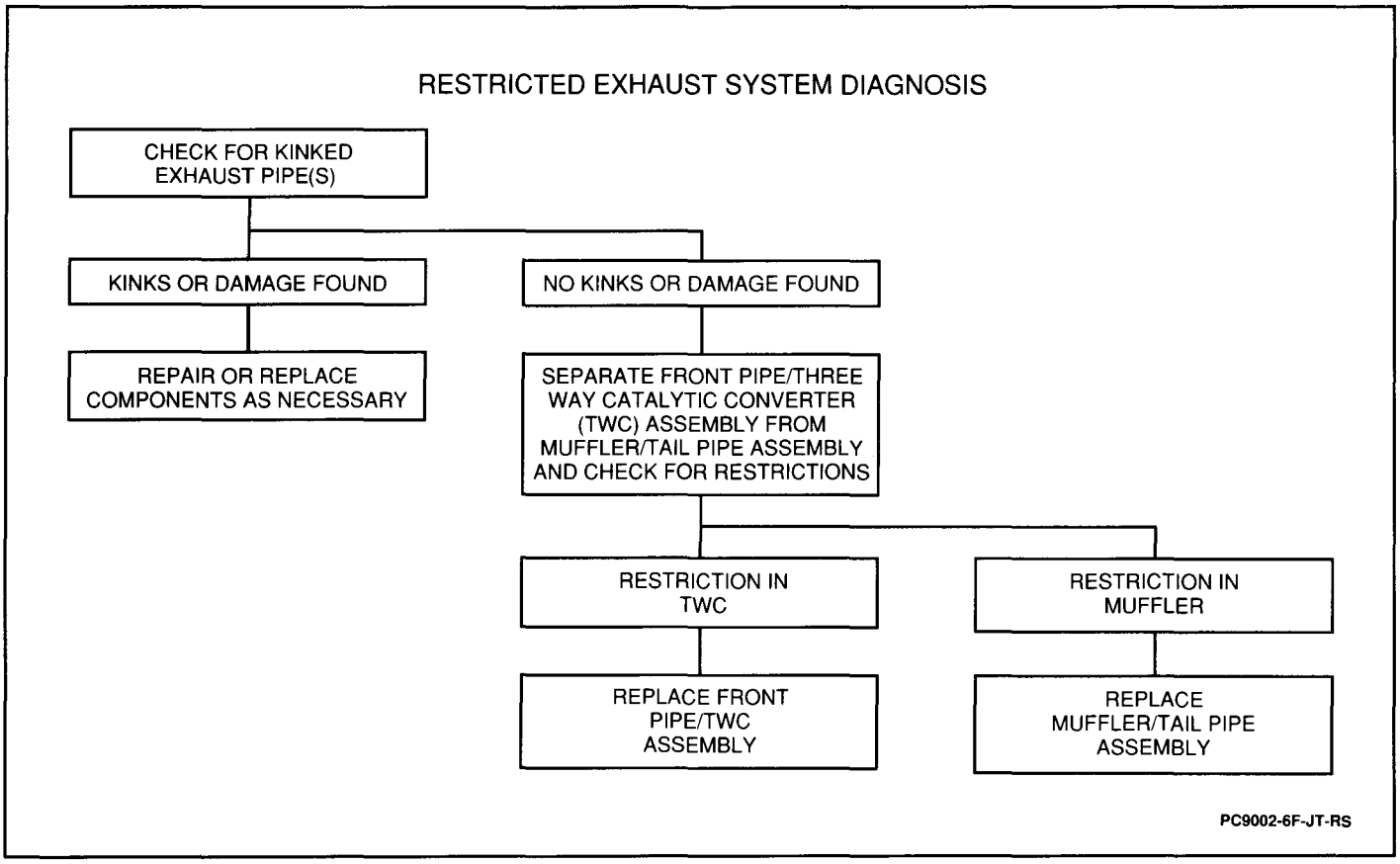

Figure 2 Restricted Exhaust System Diagnosis Chart

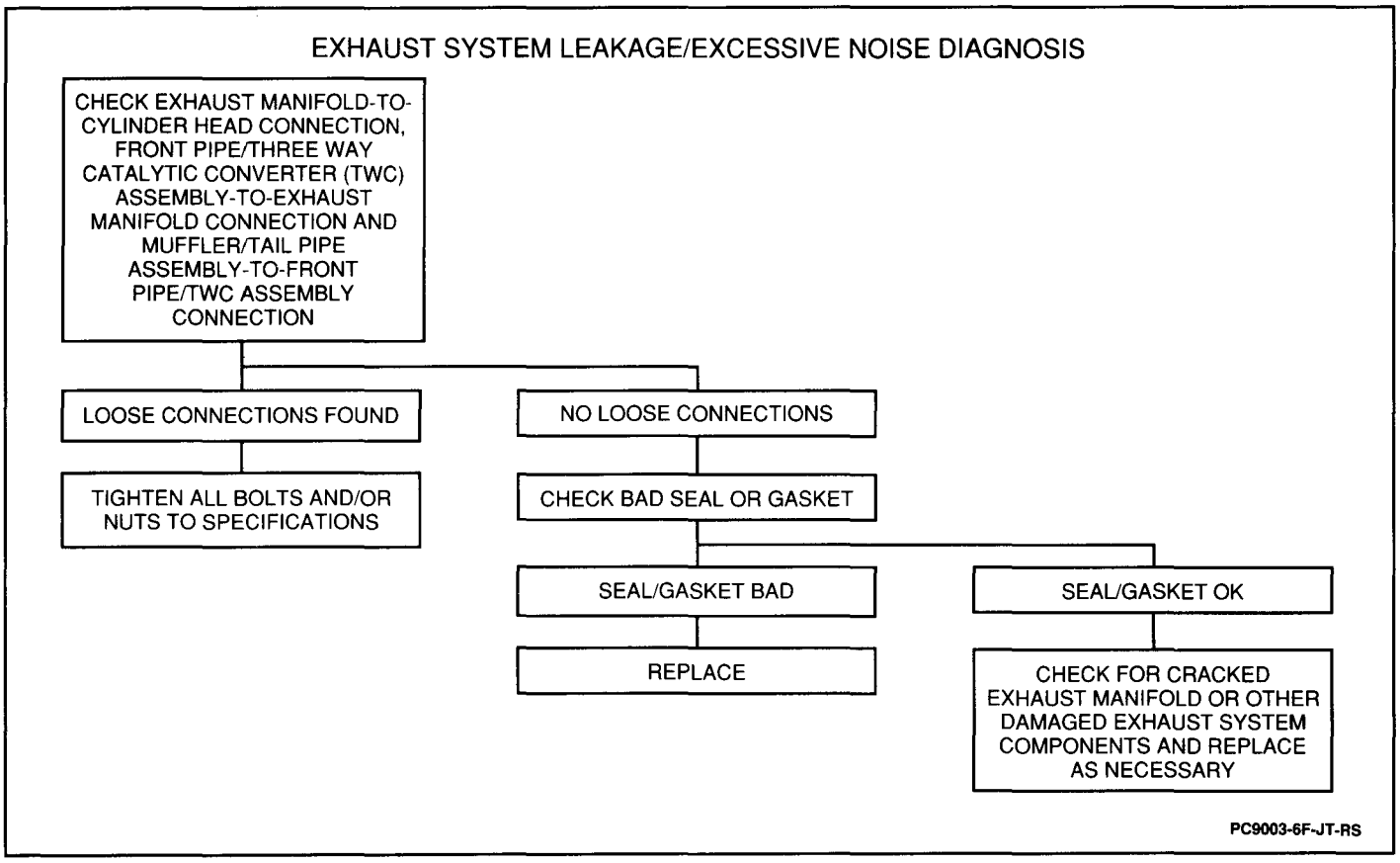

Figure 3 Exhaust System Leakage/Excessive Noise Diagnosis Chart

ON-VEHICLE SERVICE

COMPONENT REPLACEMENT

When installing a new exhaust system component, always use new gaskets and seals.

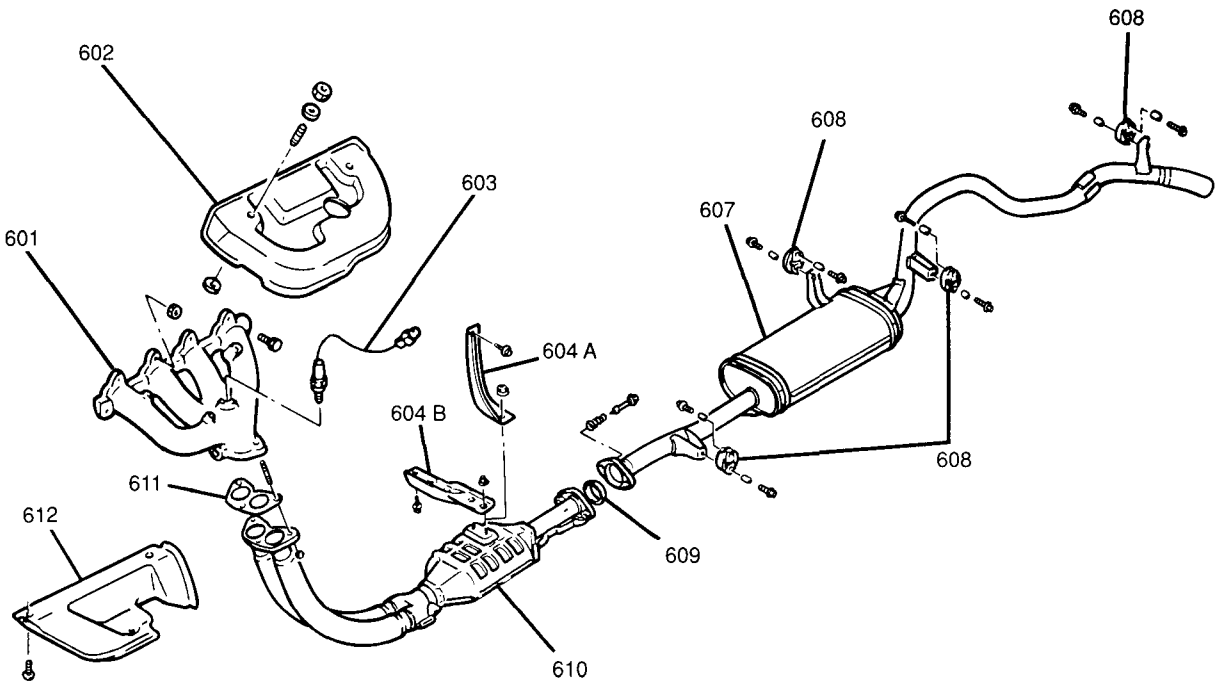

601 EXHAUST MANIFOLD
602 EXHAUST MANIFOLD UPPER HEAT SHIELD
603 OXYGEN SENSOR
604A TWC SUPPORT BRACKET (TWO-WHEEL DRIVE MODELS)
604B TWC SUPPORT BRACKET (FOUR-WHEEL DRIVE MODELS)
607 MUFFLER/TAIL PIPE ASSEMBLY
608 MUFFLER/TAIL PIPE ASSEMBLY HANGERS
609 FRONT PIPE/TWC ASSEMBLY-TO-MUFFLER/ TAIL PIPE ASSEMBLY SEAL
610 FRONT PIPE/THREE WAY CATALYTIC CONVERTER (TWC) ASSEMBLY
611 EXHAUST MANIFOLD-TO-FRONT PIPE/ TWC ASSEMBLY GASKET
612 EXHAUST MANIFOLD LOWER HEAT SHIELD

PC9004-6F-JT-RS

Figure 4 Exhaust System Components

FRONT PIPE/THREE WAY CATALYTIC CONVERTER (TWC) ASSEMBLY

Figures 4, 5 and 6

Remove or Disconnect

- Raise and suitably support vehicle. Refer to SECTION 0A.

1. Three nuts and front pipe/TWC assembly from exhaust manifold (Figure 5).

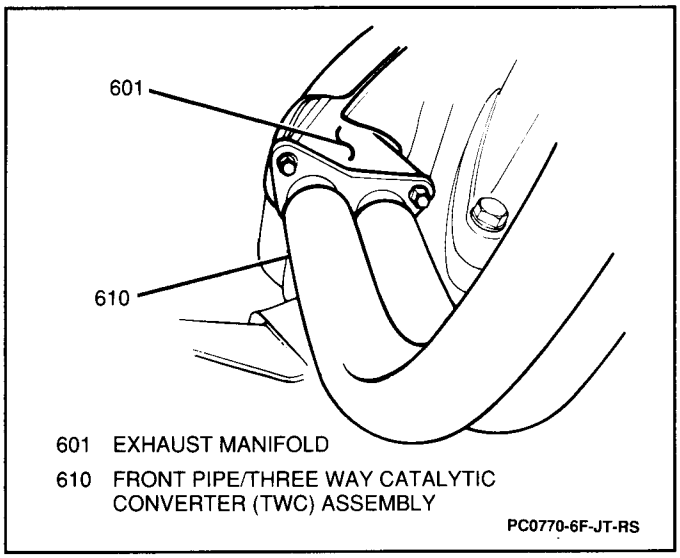

Figure 5 Front Pipe/Three Way Catalytic Converter (TWC) Assembly at Exhaust Manifold

2. Two nuts securing TWC to TWC support bracket (Figure 4).
3. Two bolts and two springs securing front pipe/TWC assembly to muffler/tail pipe assembly and remove front pipe/TWC assembly from vehicle (Figure 6).

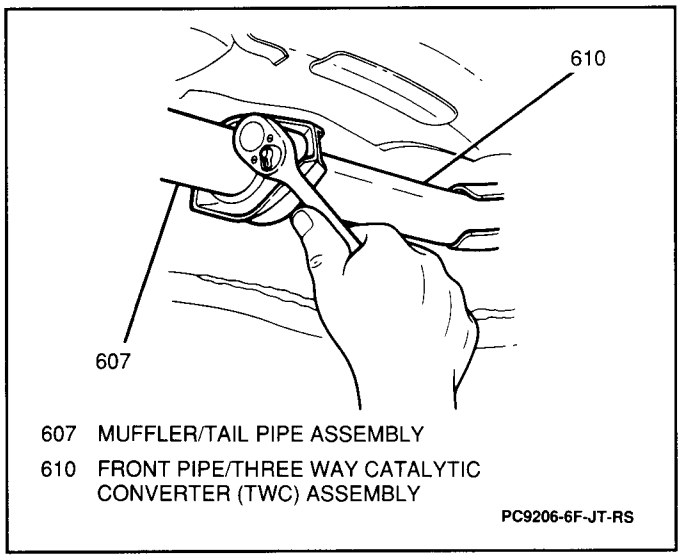

Figure 6 Removing Front Pipe/Three Way Catalytic Converter (TWC) Assembly from Muffler/Tail Pipe Assembly

Clean

- Gasket and seal mating surfaces.

Install or Connect

1. Front pipe/TWC assembly with new gasket to vehicle; secure to exhaust manifold with three nuts. Do not tighten fully.
2. Front pipe/TWC assembly with new seal to muffler/tail pipe assembly; secure with two springs and two bolts. Do not tighten bolts fully.
3. Two nuts securing TWC to TWC support bracket. Do not tighten fully.

Adjust

- Align all system components properly to prevent any noise or vibrations before tightening fasteners.

Tighten

- Front pipe/TWC assembly-to-exhaust manifold nuts to 50 N·m (37 lb.ft.).
- Front pipe/TWC assembly-to-muffler/tail pipe assembly nuts to 50 N·m (37 lb.ft.).
- TWC support bracket-to-TWC nuts to 23 N·m (17 lb.ft.).

- Lower vehicle.

MUFFLER/TAIL PIPE ASSEMBLY

Figures 4, 6 and 7

Remove or Disconnect

- Raise and suitably support vehicle. Refer to SECTION 0A.

1. Two bolts, two springs and muffler/tail pipe assembly from front pipe/three way catalytic converter (TWC) assembly (Figure 6).
2. One bolt and hanger from pipe at muffler (Figure 4).
3. One bolt and hanger from muffler.
4. Two bolts and hangers from tail pipe.
5. Muffler/tail pipe assembly from vehicle.

Clean

- Seal mating surfaces.

Install or Connect

Important

- Be certain to install the muffler/tail pipe assembly hangers in their proper position (Figure 7).

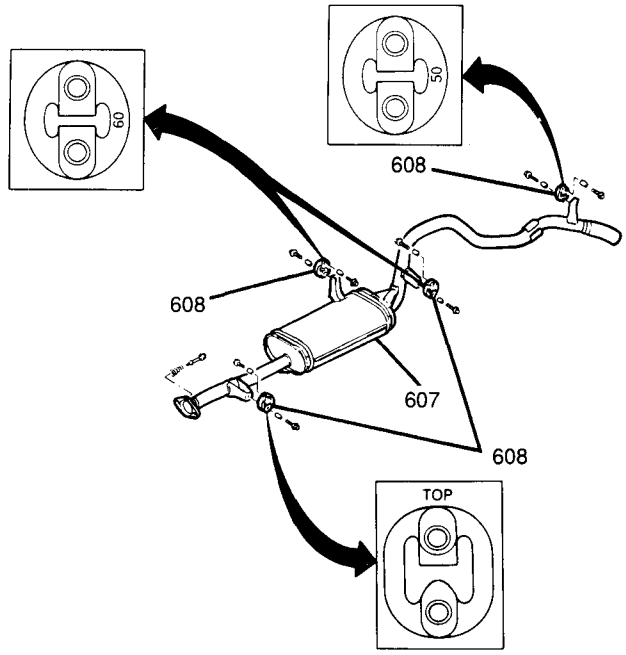

607 MUFFLER/TAIL PIPE ASSEMBLY
608 MUFFLER/TAIL PIPE ASSEMBLY HANGERS

NC9205-6F-JT-RS

Figure 7 Muffler/Tail Pipe Assembly Hanger Positions

1. Muffler/tail pipe assembly to vehicle; secure tail pipe with two hangers (one bolt each). Do not tighten fully.
2. Muffler/tail pipe assembly, with new gasket, to front pipe/TWC assembly; secure with two springs and two bolts. Do not tighten bolts fully.
3. Hanger to muffler; secure with one bolt. Do not tighten fully.
4. Hanger to pipe at muffler; secure with one bolt. Do not tighten fully.

Adjust

- Align all system components properly to prevent any noise or vibrations before tightening fasteners.

Tighten

- Front pipe/TWC assembly-to-muffler/tail pipe assembly bolts to 50 N·m (37 lb.ft.).
- All hanger bolts to 13 N·m (115 lb.in.).

- Lower vehicle.

THREE WAY CATALYTIC CONVERTER (TWC) SUPPORT BRACKET

Figure 4

Remove or Disconnect

- Raise and suitably support vehicle. Refer to SECTION 0A.

1. Two TWC support bracket-to-extension case bolts (two-wheel drive models).
2. Two TWC support bracket-to-transfer case bolts (four-wheel drive models).
3. Two nuts and TWC support bracket from TWC (Figure 4).

Install or Connect

1. TWC support bracket to TWC; secure with two nuts.

   Tighten

   - TWC support bracket-to-TWC nuts to 23 N·m (17 lb.ft.).

2. Two TWC support bracket-to-transfer case bolts (four-wheel drive models).
3. Two TWC support bracket-to-extension case bolts (two-wheel drive models).

   Tighten

   - TWC support bracket-to-transfer case bolts to 50 N·m (37 lb.ft.) (four-wheel drive models).
   - TWC support bracket-to-extension case bolts to 50 N·m (37 lb.ft.) (two-wheel drive models).

- Lower vehicle.

SPECIFICATIONS

FASTENER TORQUES

Three Way Catalytic Converter (TWC) Support Bracket-to-TWC Nuts	23 N·m (17 lb.ft.)
Three Way Catalytic Converter (TWC) Support Bracket-to-Extension Case Bolts (Two-Wheel Drive Models)	50 N·m (37 lb.ft.)
Three Way Catalytic Converter (TWC) Support Bracket-to-Transfer Case Bolts (Four-Wheel Drive Models)	50 N·m (37 lb.ft.)
Front Pipe/Three Way Catalytic Converter (TWC) Assembly-to-Exhaust Manifold Nuts	50 N·m (37 lb.ft.)
Front Pipe/Three Way Catalytic Converter (TWC) Assembly-to-Muffler/ Tail Pipe Assembly Bolts	50 N·m (37 lb.ft.)
Hanger Bolts	13 N·m (115 lb.in.)

SERVICE PARTS INFORMATION

Component Name Used in Section 6F	Reference Name in Service Parts Catalog	Group Number
Three Way Catalytic Converter (TWC) Support Bracket (Two-Wheel Drive Models)	Bracket, Engine Exhaust Center Pipe Hanger	3.609
Three Way Catalytic Converter (TWC) Support Bracket (Four-Wheel Drive Models)	Bracket, Engine Exhaust Center Pipe Hanger	3.609
Front Pipe/Three Way Catalytic Converter (TWC) Assembly	Pipe Asm, Engine Exhaust w/Chamber	3.609
Hangers	Mount, Engine Exhaust Pipe	3.704
Muffler/Tail Pipe Assembly	Muffler, Engine Exhaust Pipe	3.701

SECTION 7

Transmissions

CONTENTS

Automatic Transmission On-Vehicle Service 7A-1
3L30 Automatic Transmission Diagnosis 7A-11A-1
3L30 Automatic Transmission Unit Repair 7A-11B-1
Manual Transmission 7B-1
2WD Manual Transmission Unit Repair 7B-10-1
4WD Manual Transmission Unit Repair 7B-11-1
Clutch 7C-1
Transfer Case 7D-1

Geo

SECTION 7A

AUTOMATIC TRANSMISSION ON-VEHICLE SERVICE

NOTICE: When fasteners are removed, always reinstall them at the same location from which they were removed. If a fastener needs to be replaced, use the correct part number fastener for that application. If the correct part number fastener is not available, a fastener of equal size and strength (or stronger) may be used. Fasteners that are not reused, and those requiring thread-locking compound, will be called out. The correct torque values must be used when installing fasteners that require them. If the above procedures are not followed, parts or system damage could result.

CONTENTS

General Information 7A-1
Transmission Identification Information 7A-1
Transmission Definitions 7A-2
Throttle Positions 7A-2
Shift Conditions 7A-3
Noise Conditions 7A-3
Preliminary Checking Procedures 7A-4
Noise and Vibration Analysis 7A-4
Transmission Fluid Information 7A-4
Transmission Fluid Level Checking Procedures 7A-6
Checking Fluid Level (Automatic Transmission at Normal Operating Temperature) 7A-6
Checking Fluid Level (Automatic Transmission at Room Temperature) 7A-6
General Service Procedures 7A-6
Parts Cleaning, Inspection and Replacement 7A-6
Flywheel/Torque Converter Vibration Test Procedure 7A-7
Fluid Leak Diagnosis 7A-8
General Method 7A-8
Powder Method 7A-8
Dye and Black Light Method 7A-8
Fluid Leak Repair 7A-8
Possible Points of Fluid Leaks 7A-10
Case Porosity Repair 7A-10
Torque Converter Clutch (TCC) Electrical Controls 7A-10
Torque Converter Clutch (TCC) Diagnosis ... 7A-10
On-Vehicle Service 7A-12
Brake Transmission Shift Interlock (BTSI) ... 7A-12
Manual Selector 7A-12
Shift Select Cable 7A-13
Park/Neutral Position (PNP) Switch 7A-14
Interlock Cable 7A-15
Shift Lock Solenoid 7A-16
Stoplamp Switch 7A-17
TV Cable 7A-17
Changing Fluid and Cleaning Filter Screen ... 7A-19
Transmission Cooler Flushing 7A-21
Serviceable Components 7A-22
Vacuum Modulator 7A-22
Low Servo 7A-23
Speedometer Driven Gear (Two-Wheel Drive Models). 7A-28
Speedometer Cable 7A-28
Extension Housing Seal (Two-Wheel Drive Models) 7A-29
Extension Housing (Two-Wheel Drive Models) 7A-29
Transfer Adapter Case Seal (Four-Wheel Drive Models) 7A-32
Transfer Adapter Case (Four-Wheel Drive Models) 7A-33
Speedometer Drive Gear (Two-Wheel Drive Models) 7A-35
Governor Assembly 7A-36
Fluid Filler Tube 7A-37
Valve Body Removal 7A-37
Valve Body Disassembly 7A-39
Valve Body Assembly 7A-40
Valve Body Installation 7A-40
Torque Converter Clutch (TCC) Solenoid and Fluid Pressure Switch 7A-41
Transmission Cooler Pipes and Hoses 7A-42
Transmission Assembly 7A-43
Specifications 7A-46
Fastener Torques 7A-46
Fluid Capacities (approximate) 7A-46
Service Parts Information 7A-47
Special Tools 7A-49

GENERAL INFORMATION

The service procedures contained in this section are common to the Hydra-Matic 3L30 3-speed automatic transmission. For complete electrical/hydraulic diagnosis, refer to SECTION 7A-11A. For complete transmission unit repair procedures, refer to SECTION 7A-11B.

TRANSMISSION IDENTIFICATION INFORMATION

Figures 1 and 2

The automatic transmission identification number is located on the top of the transmission converter housing (Figure 1). This seven digit number is stamped into the converter housing and refers to model year and serial number sequence. Additional transmission identification

information can be found on the service parts identification label (Figure 2). This label contains information on regular production options (RPO) as well as standard and mandatory options. This label is affixed to the spare tire cover of each vehicle at the assembly plant. For additional information on the service parts identification label, refer to SECTION 0A.

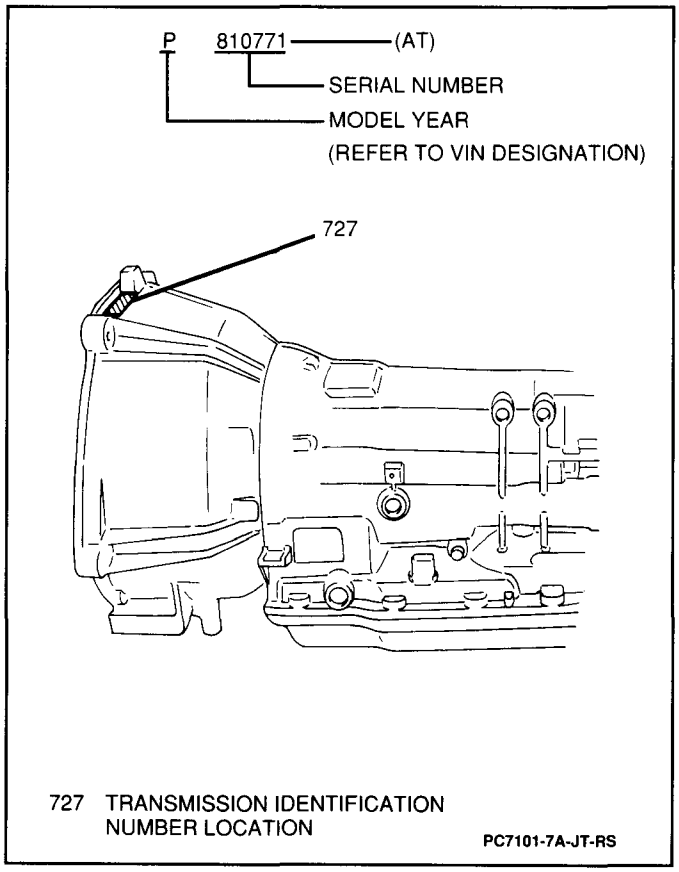

Figure 1 Transmission Identification Stamp

TRANSMISSION DEFINITIONS

The following definitions are being provided to establish a common language and assist the technician in describing automatic transmission related conditions. Some of these terms or conditions are used throughout the transmission sections of this manual.

Throttle Positions

- **Minimum Throttle** — the least amount of throttle opening required for an upshift.
- **Light Throttle** — approximately 1/4 of accelerator pedal travel.
- **Medium Throttle** — approximately 1/2 of accelerator pedal travel.
- **Heavy Throttle** — approximately 3/4 of accelerator pedal travel.
- **Wide Open Throttle (WOT)** — full travel of the accelerator pedal.
- **Full Throttle Detent Downshift** — a quick application of the accelerator pedal to its full travel, forcing a downshift.
- **Zero Throttle Coastdown** — a full release of the accelerator pedal while the vehicle is in motion and in drive range.
- **Engine Braking** — a procedure where the engine is used to slow the vehicle by manually downshifting during a zero throttle coastdown.

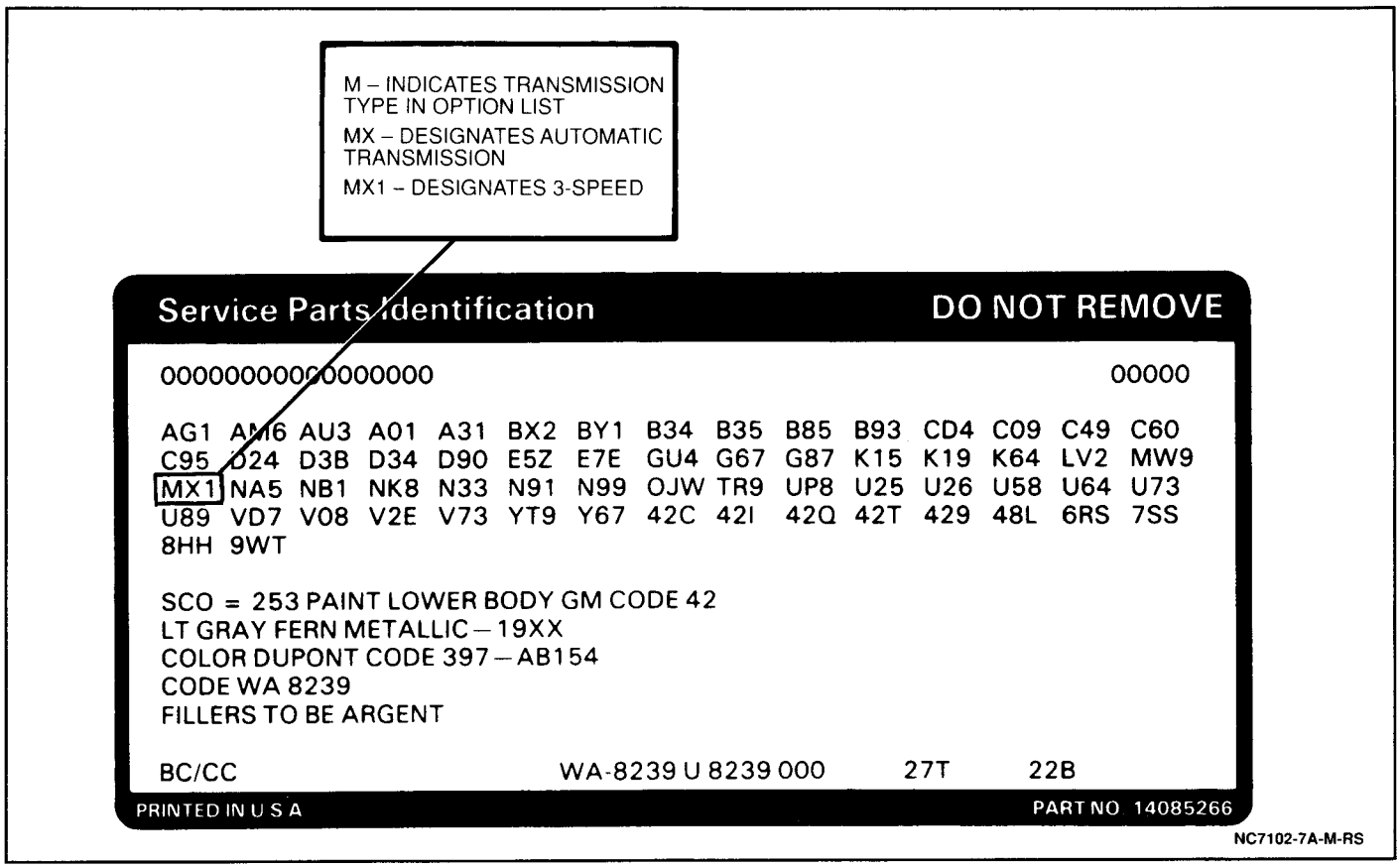

Figure 2 Service Parts Identification Label

Shift Conditions

- **Bump** — a sudden and forceful application of a clutch or band.
- **Chuggle** — a bucking or jerking condition that may be engine related. May be most noticeable when the converter clutch is engaged. Similar to the feel of towing a trailer.
- **Delayed** — a condition where a shift is expected but does not occur for a period of time. Also defined as "Late" or "Extended."
- **Double Dump (Double Feel)** — two sudden applications of the clutch or band.
- **Early** — a condition where the shift occurs before the vehicle has reached a proper speed and tends to labor the engine after the upshift.
- **End Dump** — a firmer feel at the start of the shift as compared to the feel at the end of the shift. Also defined as "Feel" or "Slip Bump."
- **Firm** — a noticeably quick application of a clutch or band that is considered normal with a medium to heavy throttle shift.
- **Flare** — a quick release in engine rpm accompanied by a momentary loss of torque. This generally occurs during a shift and should not be confused with "Harsh." Also defined as "Slipping."
- **Harsh (Rough)** — a more noticeable application of a clutch or band as compared to "Firm." This condition is considered undesirable at any throttle position.
- **Hunting** — a repeating quick series of upshifts and downshifts that causes a noticeable change in engine rpm. An example could be described as a 3-2-3 shift pattern. Also defined as "Busyness."
- **Initial Feel** — a distinctly firmer feel at the start of a shift as compared to the finish of the shift.
- **Late** — a shift that occurs when the engine is at a higher than normal rpm for a given amount of throttle.
- **Shudder** — a repeated jerking sensation similar to "Chuggle" but more severe and rapid in nature. This condition may be most noticeable during certain ranges of vehicle speed. It may also be used to define the condition after converter clutch engagement.
- **Slipping** — a noticeable increase in engine rpm without a speed increase in the vehicle. A slip usually occurs during or after initial clutch or band engagement.
- **Soft** — a slow, almost unnoticeable clutch application with very little shift feel.
- **Surge** — a repeated engine related feeling of acceleration and deceleration that is less intense than "Chuggle."
- **Tie-Up** — a condition where two opposing clutches are attempting to engage at the same time causing the engine to labor with a noticeable loss of engine rpm.

Noise Conditions

- **Drive Link Noise** — A whine or growl that increases and then fades with vehicle speed and is most noticeable under light throttle acceleration. It may also be noticeable in "P" (park) or "N" (neutral) operating ranges with the vehicle stationary.
- **Final Drive Noise** — A hum that is related to vehicle speed and is most noticed under light throttle acceleration.

- **Gear Noise** — A whine most noticeable in first gear and reverse, and is related to vehicle speed. A gear noise condition may become noticeable or go away after an upshift.
- **Pump Noise** — A high pitched whine that increases in intensity with engine rpm. This condition may also be noticeable in "P" (park) or "N" (neutral) operating ranges with the vehicle stationary.

PRELIMINARY CHECKING PROCEDURES

The condition of an automatic transmission not operating properly may be influenced by one or a combination of the following items:

- Fluid level high or low. Refer to "Fluid Level Checking Procedures" later in this section.
- Engine performance. Refer to SECTION 6 or SECTION 6E.
- TV Cable adjustment. Refer to "TV Cable" later in this section.
- Shift select cable adjustment. Refer to "Shift Select Cable" later in this section.
- Internal fluid leaks. Refer to SECTION 7A-11B.
- Electrical system. Refer to SECTION 7A-11A and SECTION 8A.
- Transmission or other mechanical components. Refer to SECTION 7A-11B.

NOISE AND VIBRATION ANALYSIS

A noise or vibration that is noticeable when the vehicle is in motion may not be the result of the transmission. If a noise or vibration is noticeable in "P" (park) or "N" (neutral) with the engine at idle, but is less noticeable as engine rpm increases, the cause may be from poor engine performance.

Inspect

1. Tires for:
   - Uneven wear.
   - Imbalance.
   - Mixed sizes.
   - Mixed radial and bias ply.

   Refer to SECTION 3E.
2. Suspension components for:
   - Misalignment and wear.
   - Loose fasteners.

   Refer to SECTION 3C.
3. Engine/Transmission mounts for:
   - Excessive wear or damage.
   - Loose mounting bolts.

   Refer to SECTION 6A1, SECTION 7D, or "Transmission Assembly" later in this section.
4. Transmission case mounting holes for:
   - Missing bolts, nuts or studs.
   - Stripped threads.
   - Cracks.
5. Flywheel for:
   - Missing or loose bolts.
   - Cracks.
   - Imbalance.

   Refer to SECTION 6A1.
6. Torque converter for:
   - Missing or loose bolts or lugs.
   - Missing or loose balance weights.
   - Imbalance.

   Refer to SECTION 7A-11B.

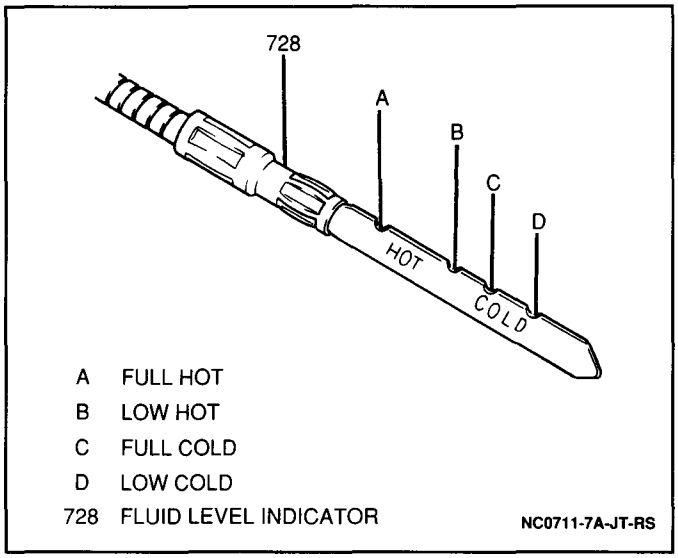

Figure 3 Fluid Level Indicator

TRANSMISSION FLUID INFORMATION

Figures 3 and 4

The automatic transmission fluid level can be checked by means of a fluid level indicator (dipstick), located in the rear of the engine compartment next to the bulkhead. By removing the fluid level indicator from the fluid filler tube, the amount of fluid can be gauged by the amount of fluid on the indicator. If the fluid level is found to be low, only Dexron® II automatic transmission fluid GM P/N 1051855, or equivalent, should be added. Use of any other type of transmission fluid could result in transmission or component failure. Checking fluid level, color and condition at regular intervals will provide early diagnosis information about the transmission (Figure 4). This information may be used to correct a condition that, if not detected early, could result in major transmission repairs. For more information refer to "Transmission Fluid Level Checking Procedures" later in this section.

Important

- When new automatic transmission fluid is red in color, it indicates that red dye was added to the fluid at the assembly plant to distinguish it from engine oil or engine coolant. This red dye is NOT an indication of fluid quality and is NOT permanent. As the vehicle is driven the fluid will become darker in color and may eventually appear light brown. However, if the fluid becomes extremely dark or loses viscosity, an internal transmission problem may exist.

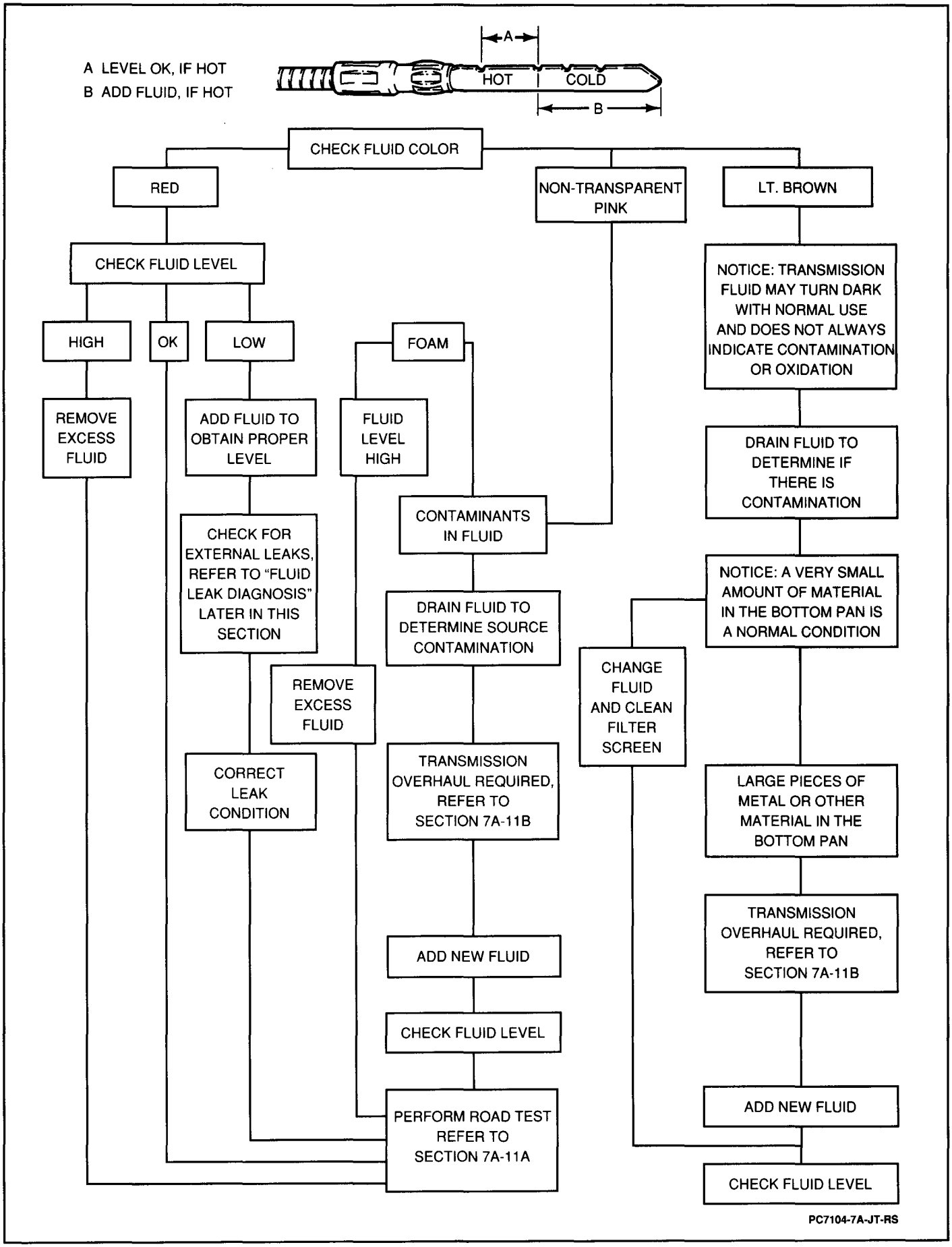

Figure 4 Checking Fluid Color and Condition

TRANSMISSION FLUID LEVEL CHECKING PROCEDURES

Checking Fluid Level (Automatic Transmission at Normal Operating Temperature)

Figures 3 and 4

Be sure to check transmission fluid level at every engine oil change. Perform a fluid level check when transmission fluid is at normal temperature, 70 to 80°C (158 to 175°F). Driving the vehicle at 60 km/h (37 mph) in "D" range for 15 minutes will raise fluid temperature to the normal operating temperature. Fluid level check procedure is as follows:

1. Place vehicle on a level surface.
2. Apply parking brake and block vehicle wheels.
3. With selector lever in "P" position, start engine. DO NOT race engine.
4. Run engine at idle and move selector lever through each range and return to the "P" position.
5. With engine running at idle, remove fluid level indicator from filler tube and wipe indicator off.
6. Reinsert fluid level indicator into filler tube making sure it is seated in its original position.
7. Remove the indicator and check the fluid level (Figure 3). The level should be between the "FULL HOT" and "LOW HOT" marks. If the level is below the "LOW HOT" mark, add fluid to bring the level to the "FULL HOT" mark. Bringing the fluid level from the "LOW HOT" mark to the "FULL HOT" mark requires 0.3 liters (0.3 qts.) of fluid. Use Dexron® II automatic transmission fluid GM P/N 1051855, or equivalent.

Checking Fluid Level (Automatic Transmission at Room Temperature)

Figures 3 and 4

If the transmission has been overhauled or the fluid has been drained for oil pan and/or valve body service, refill the transmission after assembly and check its level according to the following procedures:

1. Place vehicle on level surface.
2. Apply parking brake and block vehicle wheels.
3. With selector lever in "P" position, start engine and run at idle for five minutes. DO NOT race engine.
4. With engine running at idle, check the level on the fluid level indicator (Figure 3). Fluid level should be between "FULL COLD" and "LOW COLD" marks. If fluid level is below the "LOW COLD" mark, add fluid to bring the level between the "LOW COLD" and "FULL COLD" marks. Use Dexron® II automatic transmission fluid GM P/N 1051855, or equivalent. DO NOT overfill.

   NOTICE: DO NOT overfill automatic transmission. Overfilling may cause foaming and loss of fluid through the vent. Transmission slippage and mechanical failure may result.

GENERAL SERVICE PROCEDURES

PARTS CLEANING, INSPECTION AND REPLACEMENT

Use appropriate safety equipment such as:

- Safety glasses.
- Safety shoes.
- Gloves.

NOTICE: The automatic transmission is an assembly that relies on hydraulic operation. This unit contains many seals, O-rings and gaskets that are set to very close tolerances. Any introduction of foreign matter can cause a hydraulic failure. Therefore, all facets of repair operations must be carried out in a clean work environment.

- Keep work areas and tools clean.
- Clean transmission exterior before removing parts.
- DO NOT use wipe cloths or rags.
- DO NOT use solvents on:
  - Rubber seals.
  - Plastic/Teflon® thrust washers or spacers.
- Blow out all fluid passages with compressed air.
- Clean out small passages with fine wire.
- Handle all parts carefully to prevent damage.

NOTICE: The assembly of some components will require the use of an assembly lube. It is recommended that J 36850 Transjel® transmission assembly lubricant be used during assembly. DO NOT use any type of grease to retain parts during assembly of this unit. Lubricants other than the recommended assembly lube may change transmission fluid characteristics, cause undesirable shift conditions and/or fluid pump intake clogging.

- When installing screws, bolts or studs into aluminum, always dip the threaded portion in J 36850.

NOTICE: DO NOT use air powered tools to disassemble or assemble transaxles. Improper bolt torques can contribute to transmission failure. This information, vital to diagnosis, can only be detected with hand tools.

- Observe and follow all torque specifications.
- Recondition stripped or damaged aluminum threads with thread inserts.
- Use only the gaskets or sealers discussed in this section.
- Replace Teflon® and rubber lip seals only when necessary and install using the appropriate seal installer.

Inspect

1. Manual linkages and cables for:
   - Bent or broken links and rods.
2. All seals, gaskets, O-ring seals and mating surfaces for:
   - Nicks.
   - Cuts.
   - Damage.
3. Snap rings for:
   - Expansion or compression.
   - Distortion.
   - Nicks.
   - Proper ring to groove fit.
4. Bearing and thrust surfaces for:
   - Wear.
   - Scoring.
   - Pitting.

FLYWHEEL/TORQUE CONVERTER VIBRATION TEST PROCEDURE

Inspect

1. With manual selector in "P" (park) position, start engine.
2. With engine at idle, note any abnormal vibration.
3. Shift selector lever to "N" and note any abnormal vibration.
4. Return shift selector lever to "P" position and turn ignition switch off.
5. Raise and suitably support vehicle. Refer to SECTION 0A.
6. Remove two bolts and flywheel inspection cover.
7. Remove three flywheel-to-torque converter bolts.
8. Rotate torque converter 120 degrees (1/3 turn).
9. Install the three flywheel-to-torque converter bolts.

   Tighten

   - Flywheel-to-torque converter bolts to 19 N·m (14 lb.ft.).
10. Install flywheel inspection cover.

    Tighten

    - Flywheel inspection cover bolts to 10 N·m (89 lb.in.).
11. Lower vehicle.
12. With manual selector in "P" (park) position, start engine.
13. If any abnormal vibration still exists, repeat this procedure until the best possible balance is obtained. For more information on torque converter evaluation, refer to SECTION 7A-11A.

FLUID LEAK DIAGNOSIS

The cause of most external leaks can be located and repaired with the transmission in the vehicle. There are three methods for locating automatic transmission fluid leaks.

General Method

1. Verify that the leak is transmission fluid.
2. Thoroughly clean the suspected leak area.
3. Drive the vehicle for 24 km (15 miles) or until normal operating temperatures are reached.
4. Park the vehicle over clean paper or cardboard.
5. Turn ignition switch off and wait approximately 30 minutes.
6. Inspect paper for spots in proportion to its position under the transmission assembly.
7. Make the necessary repairs.

Powder Method

1. Thoroughly clean the suspected leak area with solvent.
2. Apply an aerosol powder or baby powder to the suspected leak area.
3. Drive the vehicle for 24 km (15 miles) or until normal operating temperatures are reached.
4. Turn ignition switch off.
5. Inspect the suspected leak area and trace the leak path through the powder to find the source.
6. Make the necessary repairs.

Dye and Black Light Method

Tools Required:
J 28428-D High Intensity Black Light
J 28431-6 Fluorescent Oil Additive

1. Add 30 ml (1 oz.) of J 28431-6 into the automatic transmission fluid filler tube.
2. Drive vehicle for 24 km (15 miles) or until normal operating temperatures are reached.
3. Turn ignition switch off.
4. Using a J 28428-D, locate the source of the leak.
5. Make the necessary repairs.

FLUID LEAK REPAIR

Once the leak has been pinpointed and traced back to its source, the cause of the leak must be determined for it to be properly repaired. For example, if a gasket is replaced but the sealing flange is bent, the new gasket will not repair the leak. The bent flange must also be repaired. Before attempting to repair a leak, certain conditions should be checked and corrected if necessary. The following conditions may cause a leak:

Gasket Leakage

- Fluid level/pressure is too high.
- Plugged vent or drain-back holes.
- Improperly torqued fasteners, dirty or damaged threads.
- Warped flanges or sealing surfaces.
- Scratches, burrs or other damage to the sealing surfaces.
- Damaged or worn gasket.
- Cracking or porosity of the component.
- Improper sealant used, where applicable.
- Incorrect gasket.

Seal Leakage

- Fluid level/pressure is too high.
- Plugged vent or drain-back holes.
- Damaged seal bore.
- Damaged or worn seal.
- Improper installation.
- Cracks in component.
- Scratched, nicked or damaged, manual or output shaft surfaces.
- Loose or worn bearing causing excess seal wear.

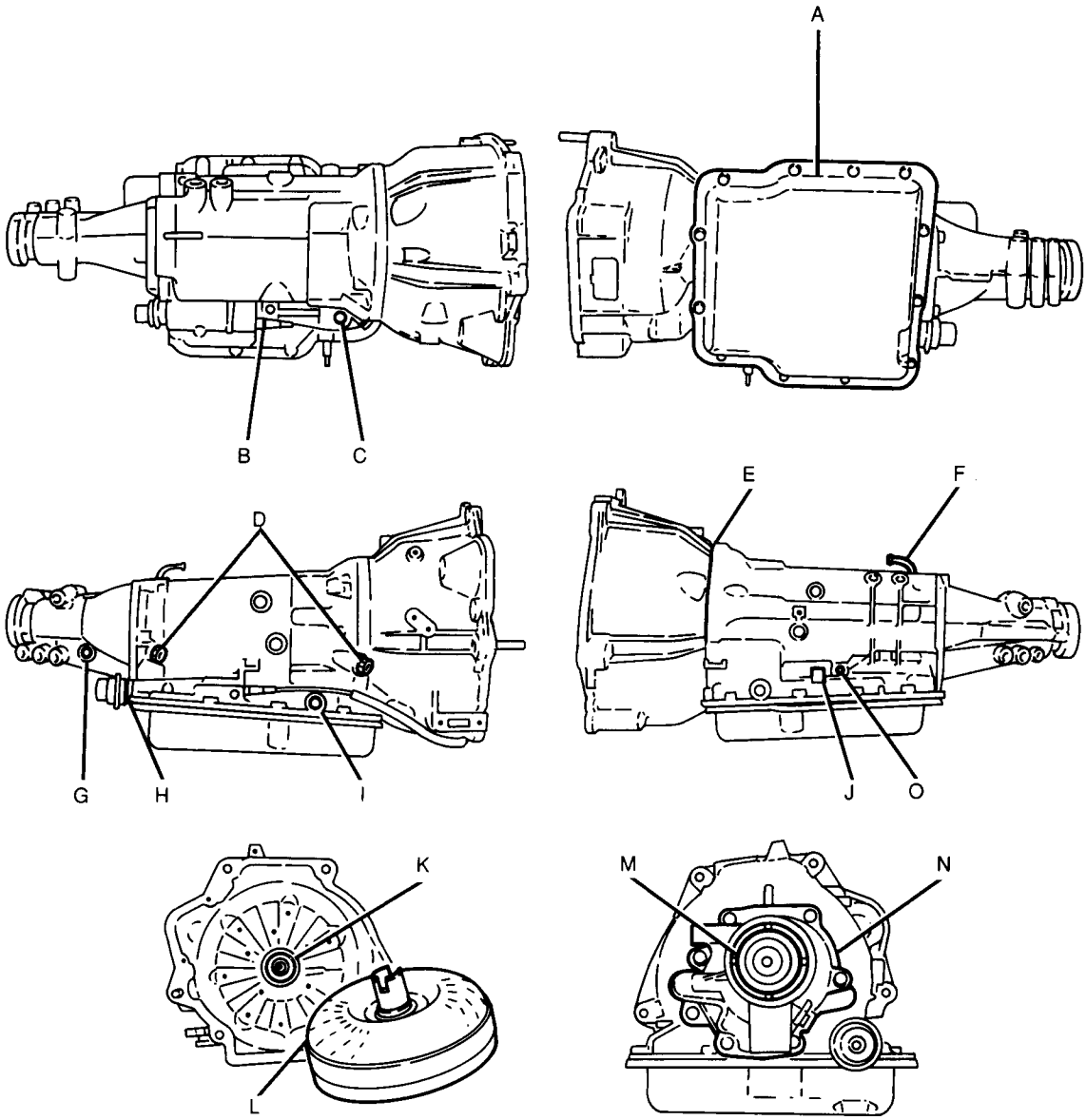

A	TRANSMISSION FLUID PAN SEAL	F	VENT	K	INPUT SHAFT SEAL
B	TV CABLE SEAL	G	SPEEDOMETER DRIVEN GEAR SEAL	L	TORQUE CONVERTER
C	FLUID FILLER TUBE SEAL	H	MODULATOR SEAL	M	EXTENSION HOUSING SEAL
D	TRANSMISSION COOLER PIPE FITTINGS	I	MANUAL SHIFT SHAFT SEAL	N	EXTENSION HOUSING-TO-TRANSMISSION CASE SEAL
E	CONVERTER HOUSING SEAL	J	TCC CONNECTOR SEAL	O	LINE PRESSURE TAP

NC7105-7A-JT-RS

Figure 5 Possible Points of Fluid Leaks

Possible Points of Fluid Leaks

Figure 5

Transmission Fluid Pan Leakage

Inspect

1. For incorrectly tightened attaching bolts.
2. For improperly installed or damaged gasket.
3. For damaged fluid pan.
4. For incorrect gasket.

Vent Leakage

Inspect

1. Fluid level indicator for overfilled system.
2. Fluid color for water or coolant in fluid. Fluid will appear milky.
3. For incorrect fluid level indicator.
4. For plugged or restricted vent.
5. For plugged or restricted drain-back holes.
6. For mispositioned fluid pump-to-case gasket.
7. For porous casting.

Case Leakage

Inspect

1. For damaged or missing filler tube O-ring.
2. For incorrectly installed or missing filler tube bracket.
3. For missing, damaged or improperly installed TV cable seal.
4. For missing or incorrectly installed extension housing-to-transmission case gasket.
5. For loose or damaged fluid cooler pipe fittings.
6. For damaged speedometer driven gear seal.
7. For manual shift shaft fluid seal.
8. For damaged, missing or improperly installed transmission case-to-converter housing gasket.
9. For worn or damaged extension housing seal.
10. For porous casting.

Converter Side Leakage

- Converter seal damaged.
  - Seal lip cut (Check converter hub for damage).
  - Garter spring missing from seal.
- Converter leak in weld area (Replace torque converter).
- Porous casting (Case or pump).

Fluid Out the Vent or Filler Tube

- Overfilled.
- Water or coolant in fluid (fluid will appear milky).
- Porous casting.
- Incorrect fluid level indicator.
- Plugged vent.
- Drain-back holes plugged.

CASE POROSITY REPAIR

1. Clean the leak area with solvent and air dry.

   CAUTION: Epoxy cement may cause skin irritation and eye damage. Read and follow all information on the container label as provided by the manufacturer.

2. Mix a sufficient amount of epoxy cement GM P/N 1052533, or equivalent, following the manufacturer's recommendations.
3. While the transmission case is hot, apply epoxy cement with a clean, dry soldering acid brush.
4. Allow the epoxy cement to cure for three hours before starting the engine.
5. Repeat fluid leak diagnosis procedure to verify the repair.

TORQUE CONVERTER CLUTCH (TCC) ELECTRICAL CONTROLS

The torque converter clutch (TCC) system uses controls that are internal as well as external to the transmission. Internal components of the TCC system include:

1. **TCC Solenoid Assembly** — Energizes to redirect transmission fluid to the converter clutch control valve in the fluid pump assembly.
2. **Fluid Pressure Switch** — Closes when the transmission is in third gear to complete the electrical circuit of the TCC solenoid to the engine control module.
3. **Fluid Pump Assembly** — Contains the TCC control valve. The TCC control valve determines the method of fluid feed to the torque converter assembly in order to enable or disable the clutch mechanism.

The external control components of the TCC system include:

1. **Stoplamp Switch** — To avoid stalling the engine when braking, the converter clutch is released any time the brakes are applied.
2. **Engine Control Module (ECM)** — Receives input signals and grounds the TCC solenoid to apply the clutch mechanism when proper operating conditions are met.
3. **Throttle Position (TP) Sensor** — Sends throttle position information to the engine control module.
4. **Manifold Absolute Pressure (MAP) Sensor** — Sends engine vacuum (load) information to the engine control module.
5. **Vehicle Speed Sensor (VSS)** — Sends vehicle speed information to the engine control module.
6. **Engine Coolant Temperature (ECT) Sensor** — Sends engine coolant temperature information to the engine control module.

TORQUE CONVERTER CLUTCH (TCC) DIAGNOSIS

To properly diagnose the torque converter clutch (TCC) system, perform all electrical testing first. Refer to "Torque Converter Clutch" in SECTION 6E2 and SECTION 7A-11A for additional information. For an electrical schematic of the TCC system, refer to SECTION 8A.

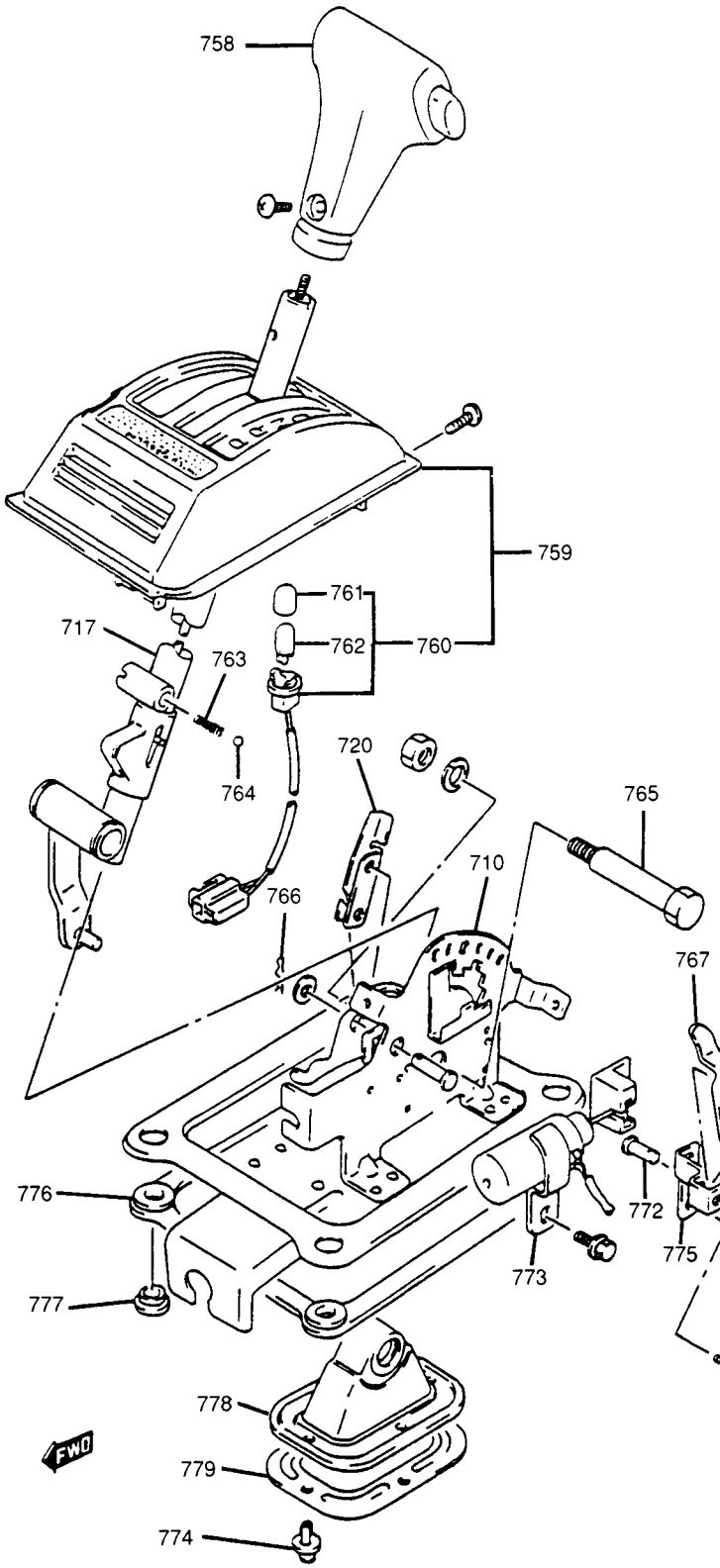

710 SELECTOR LEVER DETENT BRACKET
717 SELECTOR LEVER
720 KEY RELEASE PLATE
758 SELECTOR LEVER KNOB
759 MANUAL SELECTOR INDICATOR ASSEMBLY
760 INDICATOR LAMP ASSEMBLY
761 INDICATOR BULB ASSEMBLY
762 INDICATOR BULB
763 POSITION LOCATING SPRING
764 POSITION LOCATING BALL
765 SELECTOR LEVER SHAFT
766 RETAINER CLIP
767 MANUAL RELEASE PLATE
768 MANUAL RELEASE KNOB
769 MANUAL RELEASE ROD
770 MANUAL RELEASE SPRING
771 MANUAL RELEASE ROD BUSHING
772 JOINT PIN
773 SHIFT LOCK SOLENOID
774 BOOT CLIP
775 MANUAL RELEASE PIVOT PLATE
776 SELECTOR LEVER HOUSING
777 SELECTOR LEVER HOUSING GASKET
778 SELECTOR LEVER LOWER BOOT
779 BOOT PLATE

NC7106-7A-JT-RS

Figure 6 Manual Selector

ON-VEHICLE SERVICE

BRAKE TRANSMISSION SHIFT INTERLOCK (BTSI)

Manual Selector

Figures 6, 7 and 8

Remove or Disconnect

1. Negative (-) battery cable.
2. Two screws, two plastic retaining clips and console box from floor.
3. Shift lock solenoid electrical connector under carpet (Figure 7).

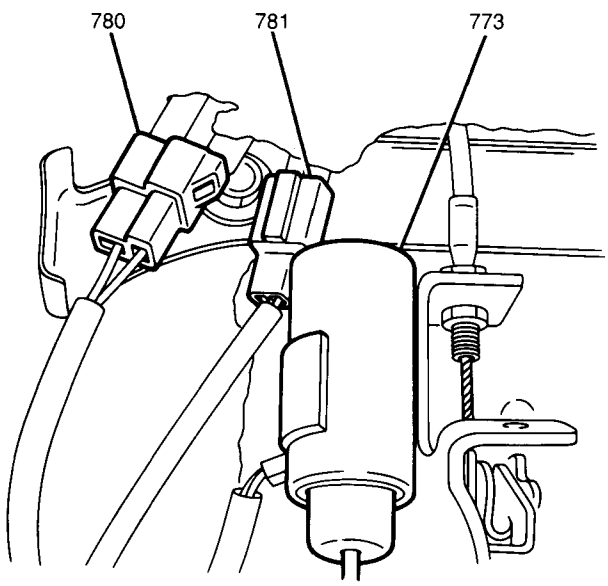

773 SHIFT LOCK SOLENOID
780 SHIFT LOCK SOLENOID ELECTRICAL CONNECTOR
781 SHIFT INDICATOR LAMP ELECTRICAL CONNECTOR

NC7107-7A-JT-RS

Figure 7 Shift Lock Solenoid and Shift Indicator Electrical Connections

4. Shift indicator lamp electrical connector under carpet (Figure 7).
5. Four bolts and manual selector from floor.
6. Retaining clip, washer, E-clip and shift select cable from selector lever (Figure 8).

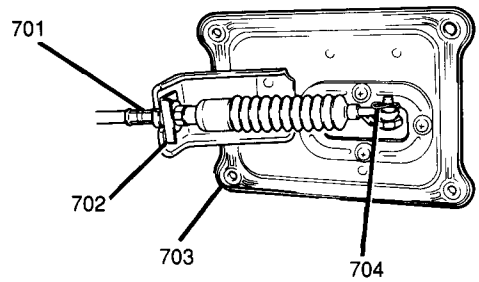

701 SHIFT SELECT CABLE ASSEMBLY
702 E-CLIP
703 MANUAL SELECTOR
704 CABLE END CLIP

NC7108-7A-JT-RS

Figure 8 Shift Select Cable at Manual Selector

Install or Connect

1. Shift select cable to selector lever; secure with E-clip, washer and retaining clip (Figure 8).
2. Manual selector to floor; secure with four bolts.

   Tighten

   - Manual selector bolts to 18 N·m (13 lb.ft.).
3. Shift indicator lamp electrical connector under carpet (Figure 7).
4. Shift lock solenoid electrical connector under carpet (Figure 7).
5. Console box to floor; secure with two plastic retaining clips and two screws.
6. Negative (-) battery cable.

   Tighten

   - Negative (-) battery cable-to-negative (-) battery terminal retainer to 15 N·m (11 lb.ft.).

Shift Select Cable

Figures 7 through 11

Remove or Disconnect

1. Negative (-) battery cable.
- Place manual selector in "N" (neutral) position.
2. Two screws, two plastic retaining clips and console box from floor.
3. Shift lock solenoid electrical connector under carpet (Figure 7).
4. Shift indicator lamp electrical connector under carpet (Figure 7).
5. Four bolts and manual selector from floor.
6. Retaining clip, washer, E-clip and shift select cable from selector lever (Figure 8).
- Raise and suitably support vehicle. Refer to SECTION 0A.
7. Select cable locknut and shift select cable from manual shift lever (Figure 9).

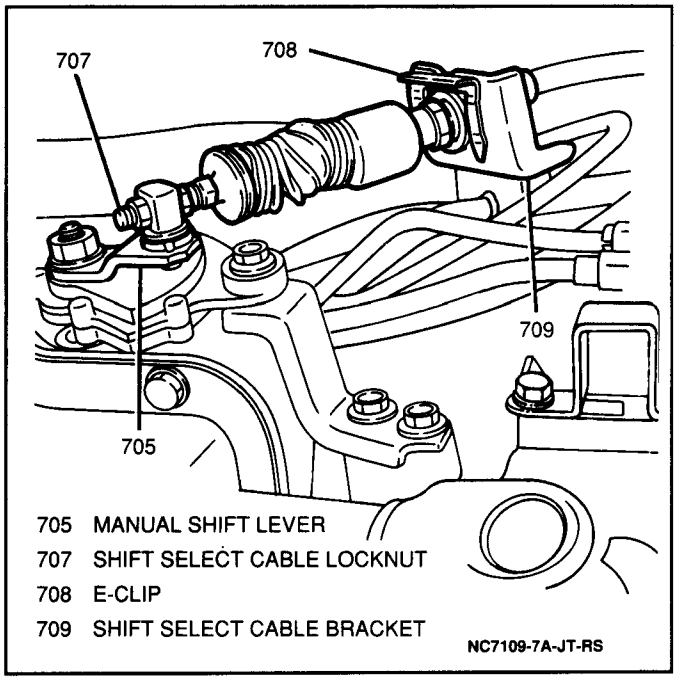

Figure 9 Shift Select Cable at Manual Shift Lever

8. E-clip from shift select cable bracket on transmission and shift select cable from vehicle (Figure 9).

Inspect

- Shift select cable for fraying or kinks. Replace as necessary.

Install or Connect

- Place manual shift lever in "L" (low) position (Figure 10).

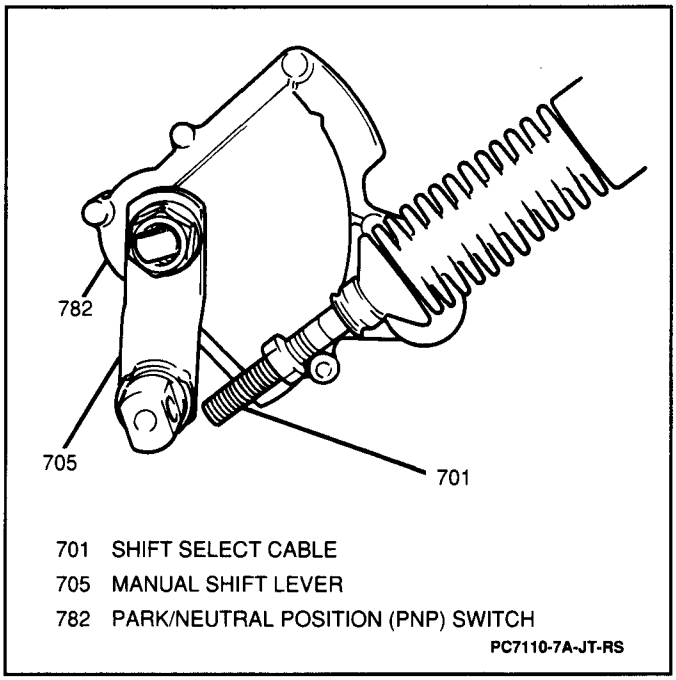

Figure 10 Manual Shift Lever In "L" (low) Position

1. Shift select cable into shift select cable bracket at transmission; secure with E-clip.
2. Shift select cable into manual shift lever while moving manual shift lever back to the "N" (neutral) position; secure with select cable locknut. Do not tighten fully (Figure 11).

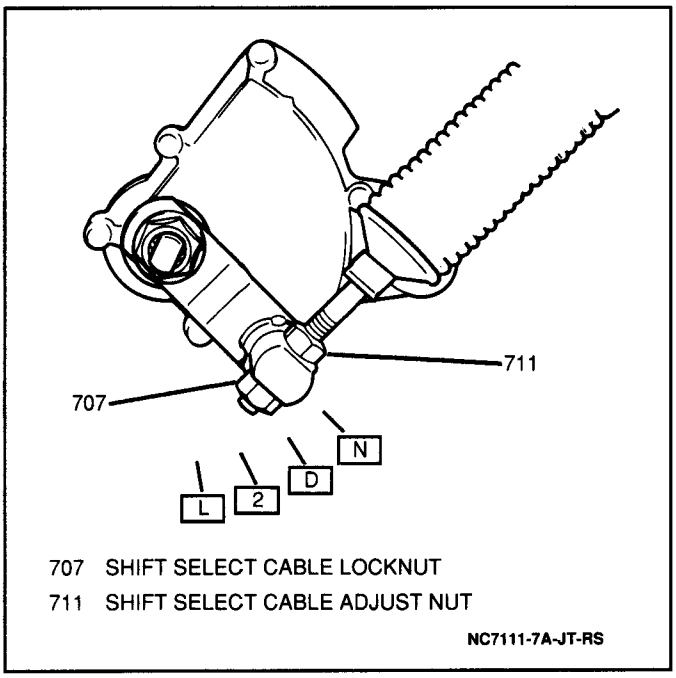

Figure 11 Shift Select Cable Locknut Installation

- Lower vehicle to where access is possible to both the manual selector and the manual shift lever.

3. Shift select cable to selector lever; secure with E-clip, washer and retaining clip (Figure 8).

Inspect

- Both ends of the shift select cable making sure no cable deflection exists.

Tighten

- Shift select cable locknut to 7 N·m (62 lb.in.).

- Completely lower vehicle.

4. Manual selector to floor; secure with four bolts.

Tighten

- Manual selector bolts to 18 N·m (13 lb.ft.).

5. Shift indicator lamp electrical connector under carpet (Figure 7).
6. Shift lock solenoid electrical connector under carpet (Figure 7).
7. Console box to floor; secure with two plastic retaining clips and two screws.

- Place manual selector in "P" (park) position.

8. Negative (-) battery cable.

Tighten

- Negative (-) battery cable-to-negative (-) battery terminal retainer to 15 N·m (11 lb.ft.).

Park/Neutral Position (PNP) Switch

Figures 12 and 13

Remove or Disconnect

1. Negative (-) battery cable.

- Place manual selector in "N" (neutral) position.
- Raise and suitably support vehicle. Refer to SECTION 0A.

2. One nut, one washer and manual shift lever from manual shift shaft (Figure 12).

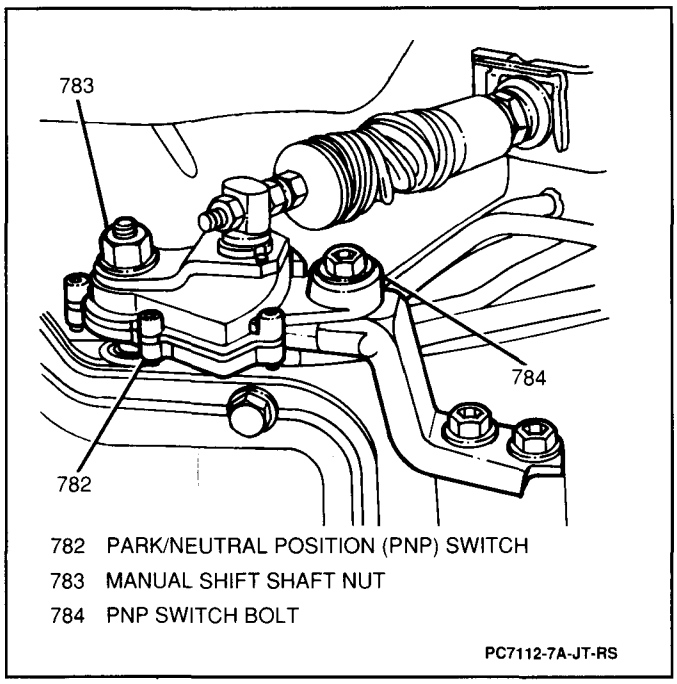

Figure 12 Park/Neutral Position (PNP) Switch

3. One bolt and PNP switch from manual shift shaft (Figure 12).
4. PNP switch electrical connectors under intake manifold and PNP switch from vehicle.

Install or Connect

1. PNP switch four terminal electrical C2 connectors under intake manifold, leaving the two terminal C1 connectors disconnected.
2. PNP switch onto manual shift shaft; secure with one bolt. Do not tighten fully.
3. Manual shift lever to manual shift shaft; secure with one washer and one nut. Do not tighten fully.

Adjust

Tool Required:
J 39200 Digital Multimeter

- PNP switch by attaching the two probes of a J 39200 to either side of the two terminal C1 connectors (Figure 13).

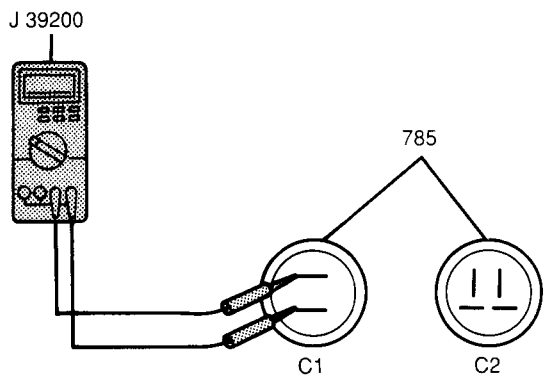

785 PNP SWITCH ELECTRICAL CONNECTORS

PC7113-7A-JT-RS

Figure 13 PNP Switch Electrical Connectors

A. Pivot the PNP switch as far clockwise (downward) as possible.
B. Slowly pivot the PNP switch counterclockwise (upward) until a click noise is heard and continuity is obtained on the J 39200.

Tighten

1. PNP switch bolt to 21 N·m (15 lb.ft.).
2. Manual select lever nut to 19 N·m (14 lb.ft.).

C. Connect the two terminal C1 PNP switch electrical connectors.

- Lower vehicle.

4. Negative (-) battery cable.

Tighten

- Negative (-) battery cable-to-negative (-) battery terminal retainer to 15 N·m (11 lb.ft.).

Important

- Upon completion of PNP switch installation, perform the following steps to ensure proper operation:
  A. Apply parking brake and block vehicle wheels.
  B. With the manual selector lever in "P" (park) position, turn ignition switch to "START" and verify that the starter motor operates.
  C. Stop engine and return ignition switch to "ON" position.
  D. Move shift selector lever from "P" to "N" (neutral) position, turn ignition switch to "START" position and verify that the starter motor operates.
  E. Verify that the starter motor DOES NOT operate in "D," "2," "L," or "R" positions.

Interlock Cable

Figures 14 and 15

Remove or Disconnect

1. Negative (-) battery cable.
2. Two screws, two plastic retaining clips and console box from floor.
3. Six screws and steering column upper and lower covers from steering column.
4. One C-clip, bracket retaining screw and interlock cable from ignition switch and out from under instrument panel (Figure 14).

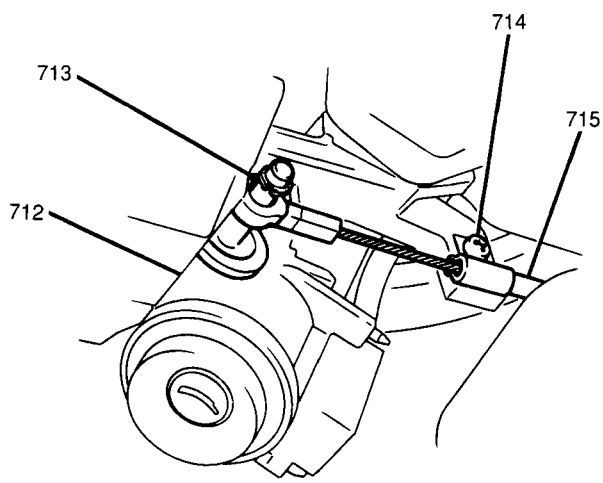

712 IGNITION SWITCH
713 C-CLIP
714 BRACKET RETAINING SCREW
715 INTERLOCK CABLE

NC7114-7A-JT-RS

Figure 14 Interlock Cable at Ignition Switch

- Loosen interlock cable locknut and adjust nut (Figure 15).

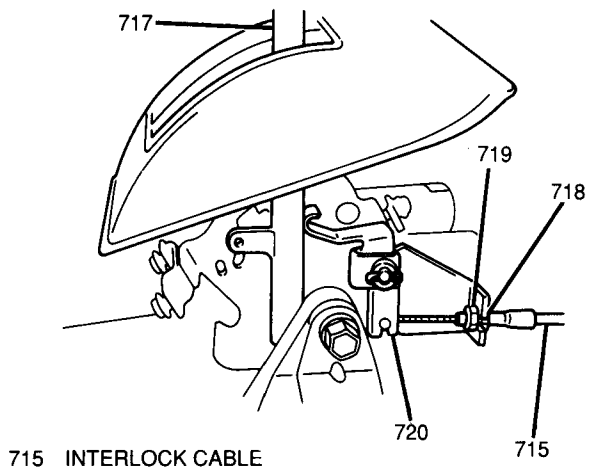

715 INTERLOCK CABLE
717 SELECTOR LEVER
718 INTERLOCK CABLE LOCKNUT
719 INTERLOCK CABLE ADJUST NUT
720 KEY RELEASE PLATE
NC7115-7A-JT-RS

Figure 15 Interlock Cable at Manual Selector

5. Interlock cable end from key release plate at manual selector (Figure 15).
6. Interlock cable from interlock cable bracket at manual selector and remove interlock cable from under carpet.

Inspect

- Interlock cable for fraying or kinks. Replace as necessary.

Install or Connect

- Route interlock cable under carpet to manual selector and under instrument panel to ignition switch.

1. Interlock cable into interlock cable bracket at manual selector (Figure 15).
2. Interlock cable end into key release plate at manual selector (Figure 15).
3. Interlock cable end to ignition switch; secure with bracket retaining screw and C-clip (Figure 14).
4. Steering column upper and lower covers to steering column; secure with six screws.

Adjust

A. Place the selector lever in "P" (park) and turn the ignition switch to the "LOCK" position.
B. Ensure the interlock cable locknut and adjust nut are completely loose.
C. Pull and hold the manual release rod outward.
D. Pull the interlock cable away from the manual selector toward the instrument panel, until the key release plate is all the way forward and no interlock cable deflection exists.

Tighten

- Interlock cable locknut and adjust nut to 7 N·m (62 lb.in.).

E. Release the manual release rod.

Important

- Make sure that the ignition key cannot be turned from "ACC" to "LOCK" with the selector lever in any position other than "P" (park). If the ignition key can be turned from "ACC" to "LOCK" with the selector lever out of "P" (park), the interlock cable was pulled too far forward during the adjustment procedure. Repeat the adjustment procedure.
- With the selector lever in "P" (park), make sure that the ignition key can be turned from "ACC" to "LOCK" and back again. If the ignition key cannot be turned with the selector lever in "P" (park), the interlock cable was not pulled far enough forward during the adjustment procedure. Repeat the adjustment procedure.

5. Console box to floor; secure with two plastic retaining clips and two screws.
6. Negative (-) battery cable.

Tighten

- Negative (-) battery cable-to-negative (-) battery terminal retainer to 15 N·m (11 lb.ft.).

Shift Lock Solenoid

Figure 7

Remove or Disconnect

1. Negative (-) battery cable.
2. Two screws, two plastic retaining clips and console box from floor.
3. Shift lock solenoid electrical connector under carpet (Figure 7).
4. One bolt and shift lock solenoid from manual selector.

Inspect

- For shift lock solenoid diagnosis and inspection procedures, refer to SECTION 8A.

Install or Connect

1. Shift lock solenoid to manual selector; secure with one bolt.

Tighten

- Shift lock solenoid retaining bolt to 10 N·m (89 lb.in.).

2. Shift lock solenoid electrical connector under carpet.
3. Console box to floor; secure with two plastic retaining clips and two screws.
4. Negative (-) battery cable.

Tighten

- Negative (-) battery cable-to-negative (-) battery terminal retainer to 15 N·m (11 lb.ft.).

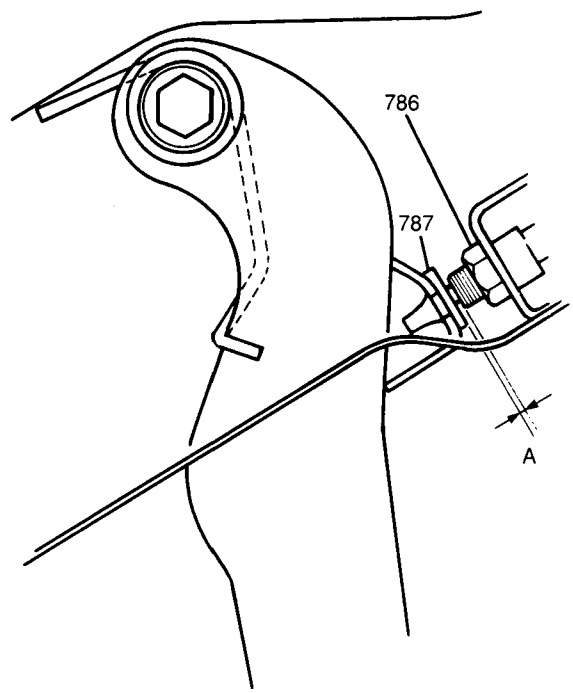

A CLEARANCE BETWEEN END OF THREAD OF STOP-LAMP SWITCH ASSEMBLY AND BRAKE PEDAL RETURN CUSHION IS WITHIN 0.5–1.0 mm (0.02–0.04")

786 STOPLAMP SWITCH ADJUSTMENT NUT

787 BRAKE PEDAL RETURN CUSHION

NC7116-7A-JT-RS

Figure 16 Stoplamp Switch Adjustment

Stoplamp Switch

Figure 16

Remove or Disconnect

1. Negative (-) battery cable.
2. Stoplamp switch electrical connector from stoplamp switch.
3. Stoplamp switch adjustment nut from stoplamp switch.
4. Stoplamp switch from brake pedal bracket by unscrewing stoplamp switch out of brake pedal bracket.

Install or Connect

1. Stoplamp switch into brake pedal bracket by screwing stoplamp switch into brake pedal bracket.
2. Stoplamp switch adjustment nut onto stoplamp switch. Do not tighten fully.

Adjust

- Stoplamp switch by pulling the brake pedal rearward (upward) away from floor. Adjust stoplamp switch until the distance between the threaded portion of the stoplamp switch and the brake pedal return cushion measures 0.5 to 1.0 mm (0.02 to 0.04-inch) (Figure 16).

Tighten

- Stoplamp switch adjustment nut to 15 N·m (11 lb.ft.).

3. Stoplamp switch electrical connector to stoplamp switch.
4. Negative (-) battery cable.

Tighten

- Negative (-) battery cable-to-negative (-) battery terminal retainer to 15 N·m (11 lb.ft.).

TV CABLE

Figures 17 through 20

Remove or Disconnect

- Loosen TV cable locknut and adjust nut (Figure 17).

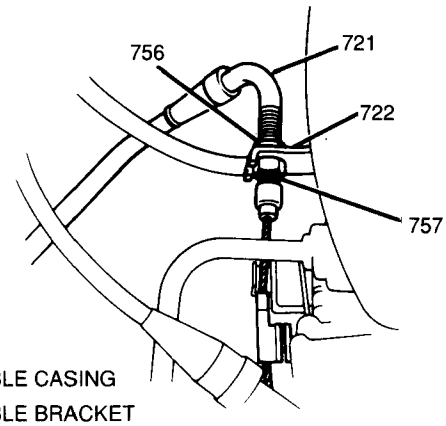

721 TV CABLE CASING

722 TV CABLE BRACKET

756 TV CABLE LOCKNUT

757 TV CABLE ADJUST NUT

NC7117-7A-JT-RS

Figure 17 TV Cable at Throttle Body

1. TV cable from throttle body linkage (Figure 17).
2. TV cable casing from TV cable bracket at throttle body.

- Raise and suitably support vehicle. Refer to SECTION 0A.

3. One bolt and TV cable retaining bracket from transmission (Figure 18).

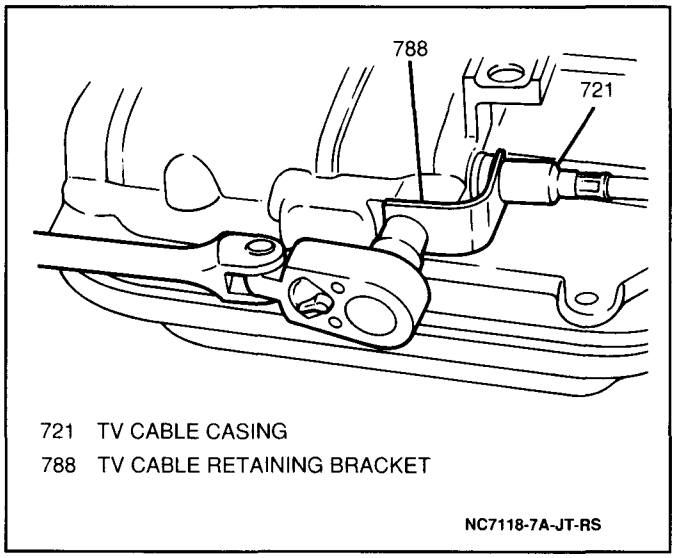

Figure 18 Removing TV Cable Retaining Bracket

4. TV cable casing from transmission and TV cable end from throttle valve (Figure 19).

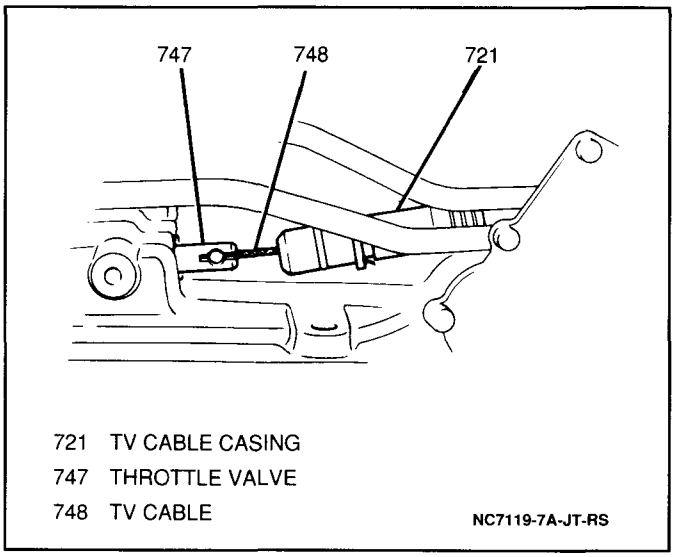

Figure 19 Removing TV Cable From Throttle Valve

Inspect

- TV cable for fraying or kinks. Replace as necessary.

Install or Connect

1. TV cable end into throttle valve and TV cable casing into transmission.
2. TV cable retaining bracket to transmission; secure with one bolt (Figure 18).

Tighten

- TV cable retaining bracket bolt to 10 N·m (89 lb.in.).

3. TV cable casing into TV cable bracket at throttle body.
4. TV cable end to throttle body linkage (Figure 17).

TV Cable Adjustment

Figure 20

Inspect

1. Accelerator cable for proper adjustment. Refer to SECTION 6C.
2. TV cable locknut and adjust nut making sure both nuts are loose and not in contact with the TV cable bracket at the throttle body.

Adjust

- TV cable with the assistance of a second technician. Place the ignition switch in the "LOCK" position and fully depress and hold the accelerator pedal.

A. Pull the TV cable casing in direction "A" away from the throttle body until tight and no cable deflection exists (Figure 20).

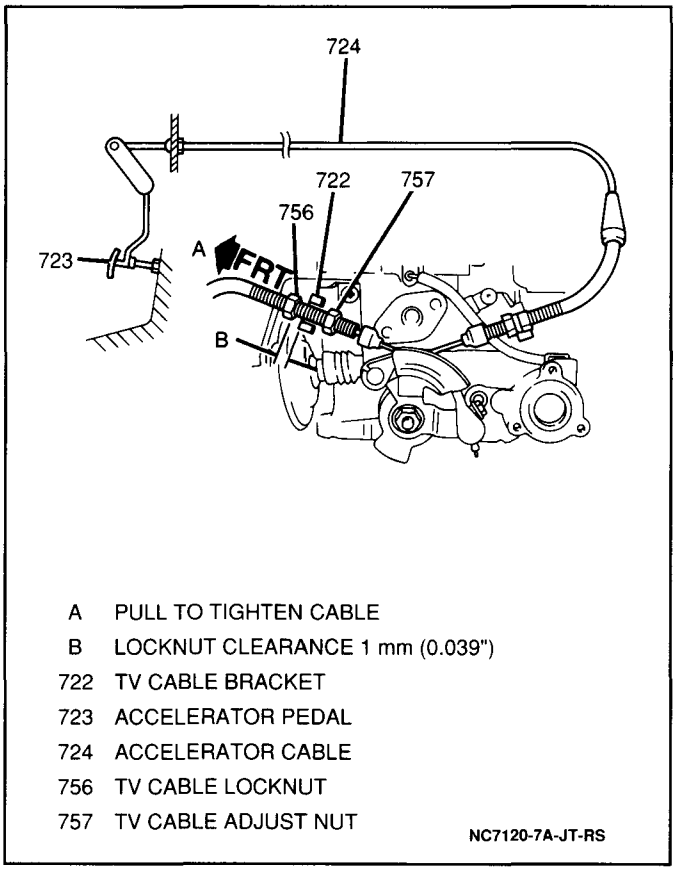

Figure 20 TV Cable Adjustment

B. With the TV cable pulled tight, tighten the TV cable locknut to within 1 mm (0.039-inch) of the TV cable bracket (Figure 20).

Important

- Make sure the TV cable adjust nut is not in contact with the TV cable bracket at this point.

C. Release the accelerator pedal while keeping the TV cable locknut-to-TV cable bracket clearance at 1 mm (0.039-inch).
D. Tighten the TV cable adjust nut until it engages the TV cable bracket, fitting inside it.
E. Once the TV cable adjust nut is positioned flush with the TV cable bracket, tighten the TV cable locknut fully.

CHANGING FLUID AND CLEANING FILTER SCREEN

Figures 21, 22 and 23

Remove or Disconnect

- Raise and suitably support vehicle. Refer to SECTION 0A.
- Place a drain pan or suitable container under transfer case (four-wheel drive models).

1. Transfer case oil level/filler plug from transfer case (four-wheel drive models).
2. Transfer case drain plug from transfer case and drain transfer case oil (four-wheel drive models).

- Place an index mark (reference mark) on the pinion flange yoke of the front propeller shaft and the differential pinion flange to ensure correct propeller shaft installation (four-wheel drive models).

3. Four bolts, four nuts and front propeller shaft from vehicle (four-wheel drive models).

NOTICE: This transmission is not equipped with a fluid pan drain plug. Transmission fluid will begin to drain out immediately after fluid pan seal is loosened. Make sure a drain pan or suitable container has been placed under the transmission fluid pan.

- Place the drain pan or suitable container under the transmission fluid pan.

4. Nine transmission fluid pan bolts around the forward perimeter of the transmission fluid pan and loosen the three transmission fluid pan bolts in the rear of the transmission fluid pan allowing the transmission fluid pan to partially drain (Figure 21).

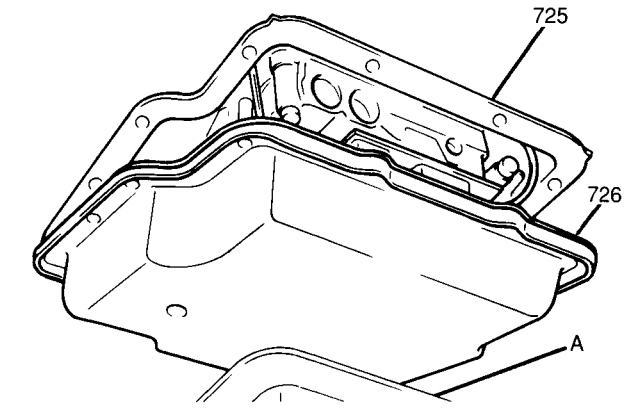

A DRAIN PAN OR SUITABLE CONTAINER
725 TRANSMISSION
726 TRANSMISSION FLUID PAN
NC7121-7A-JT-RS

Figure 21 Removing Transmission Fluid Pan

5. Three remaining transmission fluid pan bolts, transmission fluid pan and gasket and drain remainder of transmission fluid pan into drain pan.
6. Three bolts, fluid filter screen and gasket from valve body (Figure 22).

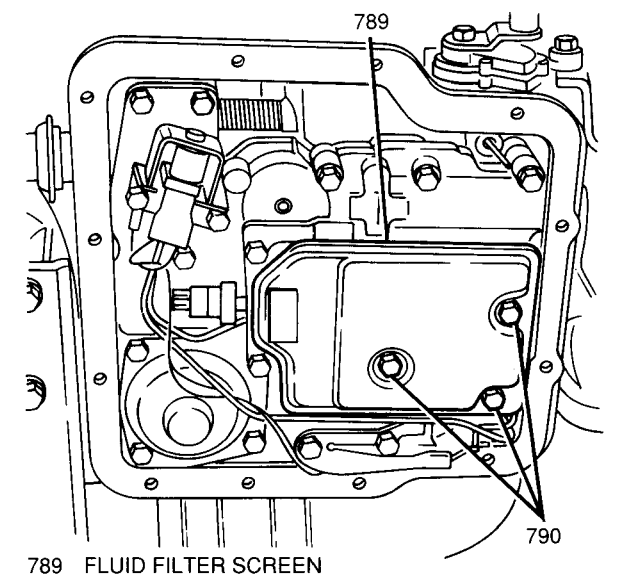

789 FLUID FILTER SCREEN
790 FLUID FILTER SCREEN BOLTS
NC7122-7A-JT-RS

Figure 22 Fluid Filter Screen

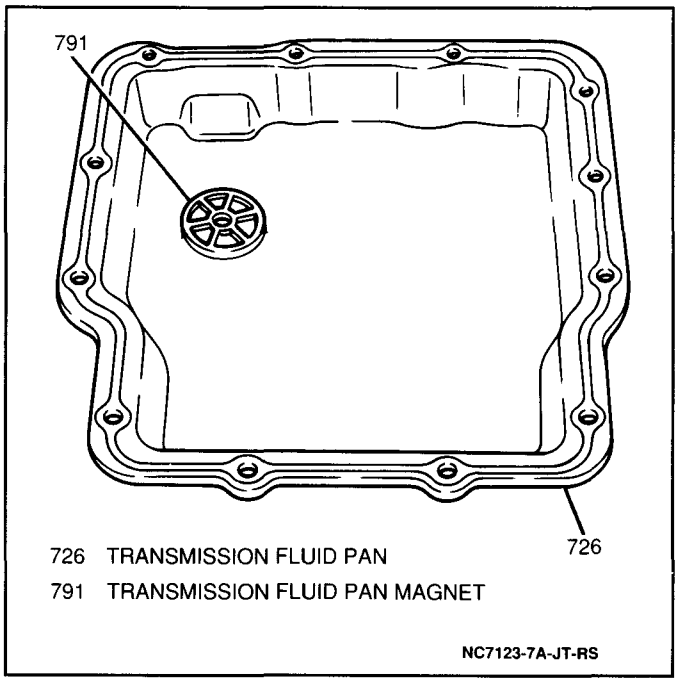

Figure 23 Transmission Fluid Pan and Magnet

Important

- A small amount of clutch material in the bottom of the transmission fluid pan is a normal condition and is consistent with normal transmission wear. The bottom of the fluid pan is equipped with a magnet that will collect minute metal filings (Figure 23). However, if large amounts of clutch material, metal shavings or other foreign matter are present, transmission disassembly and inspection is indicated.

Clean

1. Fluid filter screen with solvent and air dry.
2. Transmission fluid pan and fluid pan magnet with solvent and air dry (Figure 23).
3. Transmission fluid pan and fluid filter screen gasket mating surfaces.

Inspect

- Fluid filter screen for tears or other damage. Replace as necessary.

Install or Connect

1. New fluid filter screen gasket and fluid filter screen to valve body; secure with three bolts.

   Tighten

   - Fluid filter screen bolts to 19 N·m (14 lb.ft.).

2. New transmission fluid pan gasket and transmission fluid pan to transmission; secure with twelve bolts.

   Tighten

   - Transmission fluid pan bolts to 13 N·m (115 lb.in.).

- Apply Loctite® pipe sealant GM P/N 1052080, or equivalent, to the threaded portion of the transfer case drain plug (four-wheel drive models).

3. Transfer case drain plug into transfer case (four-wheel drive models).

   Tighten

   - Transfer case drain plug to 28 N·m (21 lb.ft.).

4. Front propeller shaft into vehicle aligning index marks made during front propeller shaft removal; secure with four bolts and four nuts (four-wheel drive models).

   Tighten

   - Front propeller shaft bolts and nuts to 50 N·m (37 lb.ft.).

- Refill transfer case with approximately 1.7 liters (3.6 pts.) of synthetic 75W-90 GL4 lubricant GM P/N 12345871, or equivalent, into the transfer case oil level/filler plug hole. Oil level should be even with the top of the transfer case oil level/filler plug hole (four-wheel drive models).
- Apply Loctite® pipe sealant GM P/N 1052080, or equivalent, to the threaded portion of the transfer case oil level/filler plug (four-wheel drive models).

5. Transfer case oil level/filler plug into transfer case (four-wheel drive models).

   Tighten

   - Transfer case oil level/filler plug to 28 N·m (21 lb.ft.).

- Lower vehicle.
- Refill transmission as necessary:
  A. Place vehicle on a level surface.
  B. Remove fluid level indicator.
  C. Add approximately 1.5 liters (1.6 qts.) of Dexron®II automatic transmission fluid GM P/N 1051855, or equivalent, into fluid filler tube.
  D. Install fluid level indicator into fluid filler tube.
  E. Apply parking brake and block vehicle wheels.
  F. With selector lever in "P" position, start engine. DO NOT race engine.
  G. Run engine at idle and move selector lever through each range and return to the "P" position.
  H. With engine running at idle, remove fluid level indicator from filler tube and wipe indicator off.
  I. Reinsert fluid level indicator into filler tube making sure it is seated in its original position.
  J. Remove the indicator and check the fluid level. The level should be between the "FULL HOT" and "LOW HOT" marks. If the level is below the "LOW HOT" mark, add fluid to bring the level to the "FULL HOT" mark. Bringing the fluid level from the "LOW HOT" mark to the "FULL HOT" mark requires 0.3 liters (0.3 qts.) of fluid. Use Dexron® II automatic transmission fluid GM P/N 1051855, or equivalent.

TRANSMISSION COOLER FLUSHING

Figure 24

In a major transmission failure where particles of metal or engine coolant has been carried with the fluid throughout the transmission and its fluid cooling system, it will be necessary to flush out the fluid cooler and its connecting hoses. To flush out the fluid cooler and hoses use the following procedure:

1. Raise and suitably support vehicle. Refer to SECTION 0A.
2. Disconnect both cooler hoses at their clamps on the right side of the transmission (Figure 24).

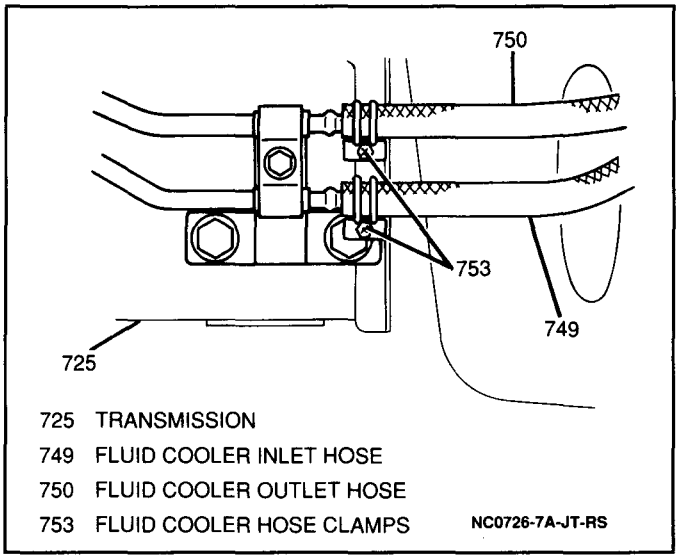

Figure 24 Transmission Fluid Cooler Inlet/Outlet Hoses

3. Place a hose over the end of the fluid cooler inlet hose (from the left side of the transmission fluid cooler) and insert the hose into an empty container.
4. Using a fluid suction gun, flush clean solvent, or equivalent, through the return hose (from the right side of the transmission fluid cooler) until clean solvent comes through the hose attached to the inlet hose. This process will "back flush" the transmission fluid cooler.
5. Remove the hose from the cooler inlet hose and place it on the return hose.
6. Using the same process as described in Step 3, flush clean solvent or equivalent through the inlet hose until clean solvent comes out the return hose.
7. Remove the remaining solvent from the fluid cooler using compressed air applied to the return hose and flush with transmission fluid.
8. Reconnect fluid cooler hoses to cooler lines at right side of transmission.

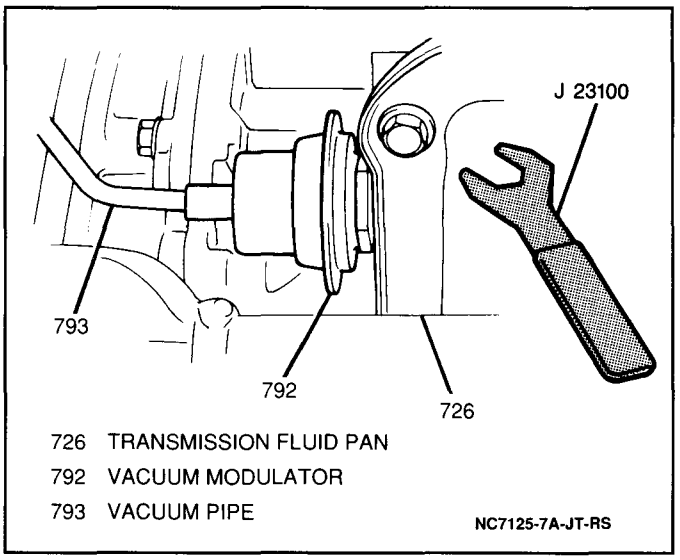

Figure 25 Removing Vacuum Modulator

SERVICEABLE COMPONENTS

VACUUM MODULATOR

Figures 25 and 26

Remove or Disconnect

Tool Required:
J 23100 Vacuum Modulator Wrench

- Raise and suitably support vehicle. Refer to SECTION 0A.

1. Vacuum hose and pipe from vacuum modulator (Figure 25).
2. Vacuum modulator and plunger from transmission using a J 23100 (Figure 25).

Inspect

Tool Required:
J 23738-A Hand Operated Vacuum Pump

1. Vacuum modulator for leakage by removing the vacuum modulator plunger from the vacuum modulator and observing any transmission fluid that drains out of the vacuum modulator. If transmission fluid is present in the vacuum modulator, replace the vacuum modulator (Figure 26).

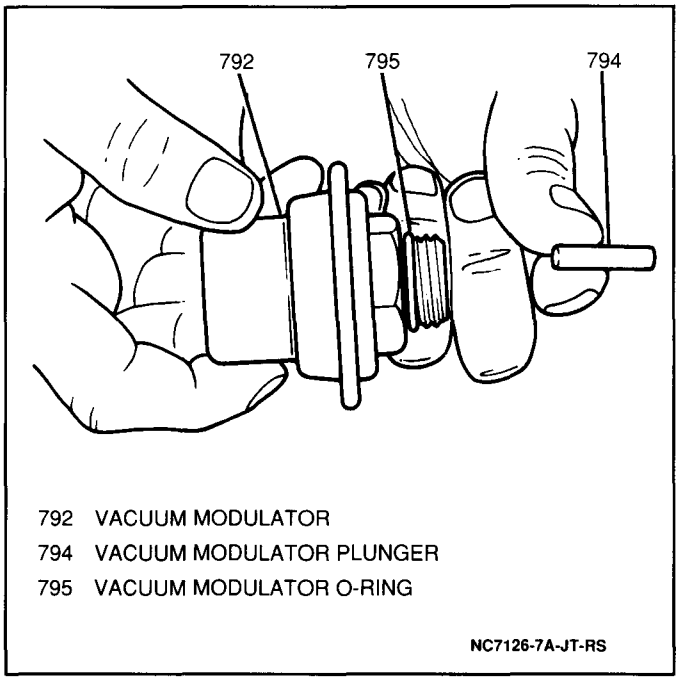

Figure 26 Inspecting Vacuum Modulator

2. Vacuum modulator for leakage using a J 23738-A. Attach the J 23738-A to the vacuum fitting on the rear of the vacuum modulator. Apply 67 kPa (20 inHg) of vacuum to the vacuum modulator and observe the gage at the top of the J 23738-A. If the J 23738-A indicates a vacuum loss, replace the vacuum modulator.

3. Vacuum modulator O-ring for cuts or other damage. Replace as necessary.

Install or Connect

Tools Required:
J 36850 Transjel® Transmission Assembly Lubricant
J 23100 Vacuum Modulator Wrench

- Apply J 36850 to the vacuum modulator O-ring.

1. Vacuum modulator and modulator plunger into transmission using a J 23100 (Figure 25).

Tighten

- Vacuum modulator to 52 N·m (38 lb.ft.).

2. Vacuum hose and pipe to vacuum modulator (Figure 25).

- Lower vehicle.

LOW SERVO

Figures 27 through 37

Remove or Disconnect

Tool Required:
J 23075 Servo and Third Clutch Piston Spring Compressor

1. Negative (-) battery cable.

- Raise and suitably support vehicle. Refer to SECTION 0A.

2. Transmission fluid pan and gasket from transmission. Refer to "Changing Fluid and Cleaning Filter Screen" earlier in this section.
3. Three bolts and fluid filter screen and gasket from valve body.
4. Two TCC solenoid pipes from TCC solenoid, fluid pump and valve body (Figure 27).

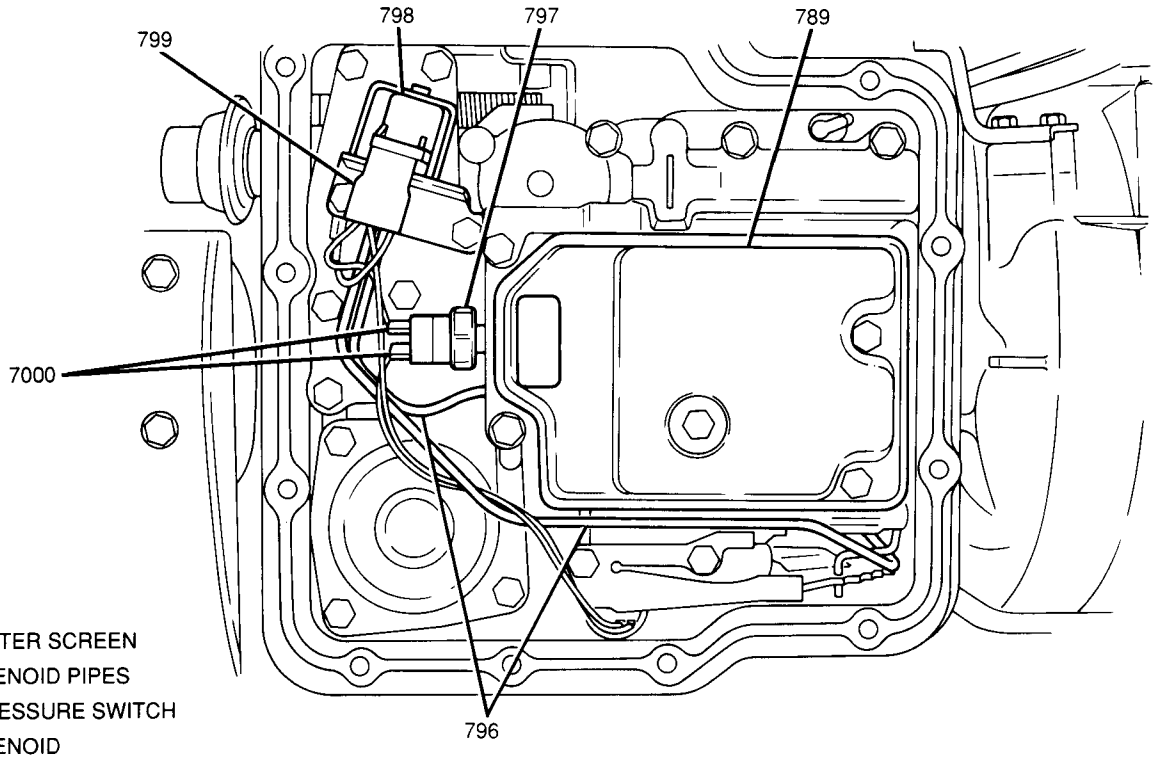

789 FLUID FILTER SCREEN
796 TCC SOLENOID PIPES
797 FLUID PRESSURE SWITCH
798 TCC SOLENOID
799 TCC SOLENOID ELECTRICAL CONNECTOR
7000 FLUID PRESSURE SWITCH ELECTRICAL CONNECTORS

NC7127-7A-JT-RS

Figure 27 TCC Solenoid, Fluid Pipes and Fluid Pressure Switch

5. Electrical connector from TCC solenoid (Figure 27).
6. Electrical connectors from fluid pressure switch (Figure 27).
7. Two bolts and TCC solenoid from reinforcement plate.
8. Six bolts and reinforcement plate from transmission (Figure 28).

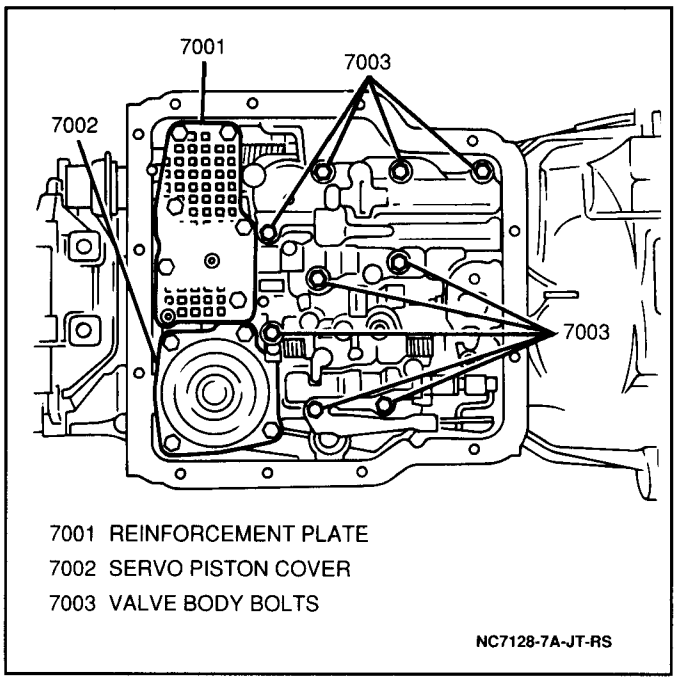

Figure 28 Reinforcement Plate, Servo Piston Cover and Valve Body Bolts

9. Four bolts, servo piston cover and gasket from transmission (Figure 28).

   NOTICE: Disconnect the manual valve link from the parking lock and range selector lever while lowering the valve body. Use caution not to lose the check ball in the transmission case passage when removing valve body. The check ball should drop out of the case passage onto the top of the valve body upon valve body removal.

10. Nine valve body bolts, manual detent roller, valve body, transfer plate, transfer plate gaskets and one check ball from transmission case (Figure 28).
    - Install a J 23075 to the transmission with the offset of the tool facing toward the corner of the transmission case (Figure 29).

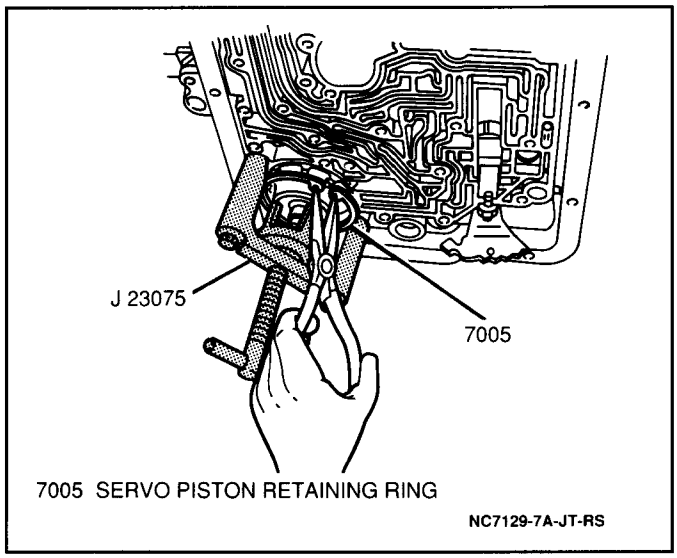

Figure 29 Removing Servo Piston Retaining Ring

    - Tighten the J 23075 until the servo piston retaining ring can be removed.
11. Servo piston retaining ring from servo piston bore in transmission case (Figure 29).
    - Loosen the J 23075 until the J 23075 can be removed from the transmission case.
12. The J 23075 from the transmission case.
13. Servo piston, return spring and servo apply rod from servo bore in transmission case (Figure 30).

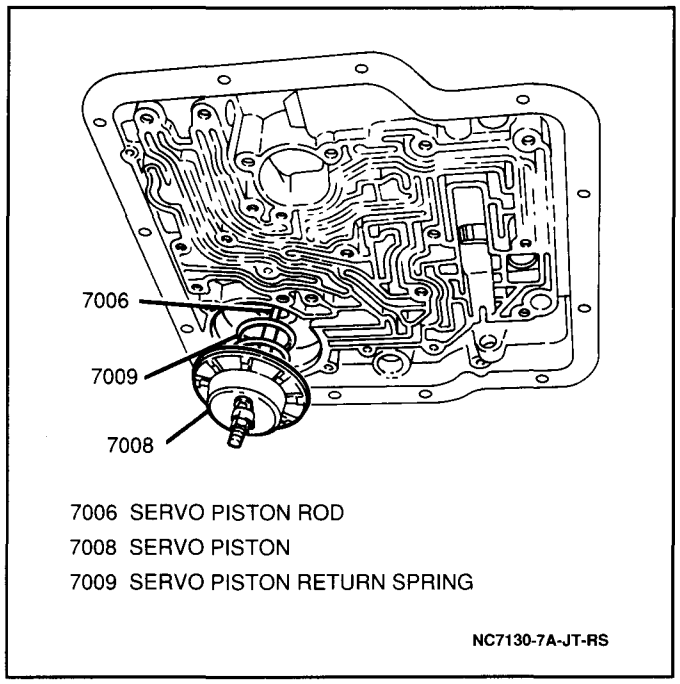

Figure 30 Removing Servo Piston, Return Spring and Apply Rod

14. Locknut from servo piston adjusting screw.
- Place the servo piston in a hydraulic press and compress the servo piston cushion spring using the J 23075 until the servo piston cushion spring retainer clip can be removed (Figure 31).

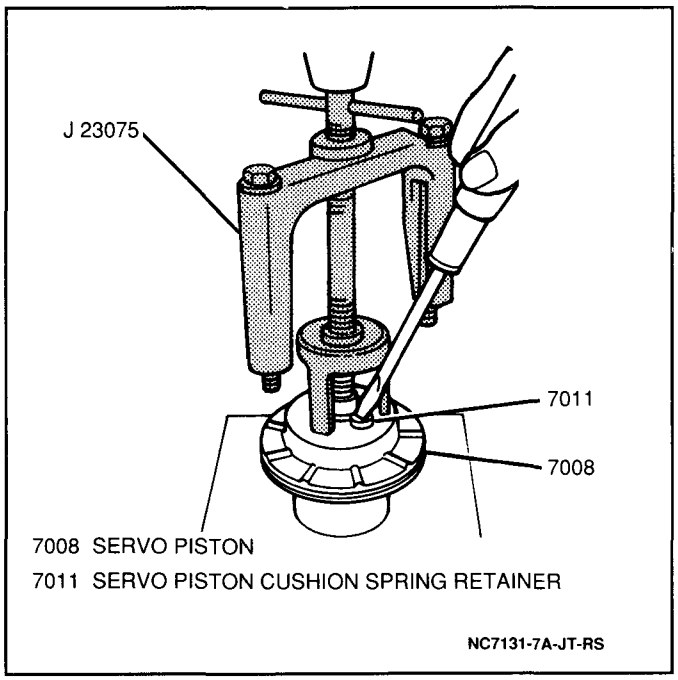

Figure 31 Removing Servo Piston Cushion Retainer Spring

15. Servo piston cushion spring retainer clip from servo piston adjusting screw (Figure 31).

16. Servo piston from hydraulic press and servo piston adjusting sleeve, cushion spring seat, cushion spring and adjusting screw from servo piston (Figure 32).

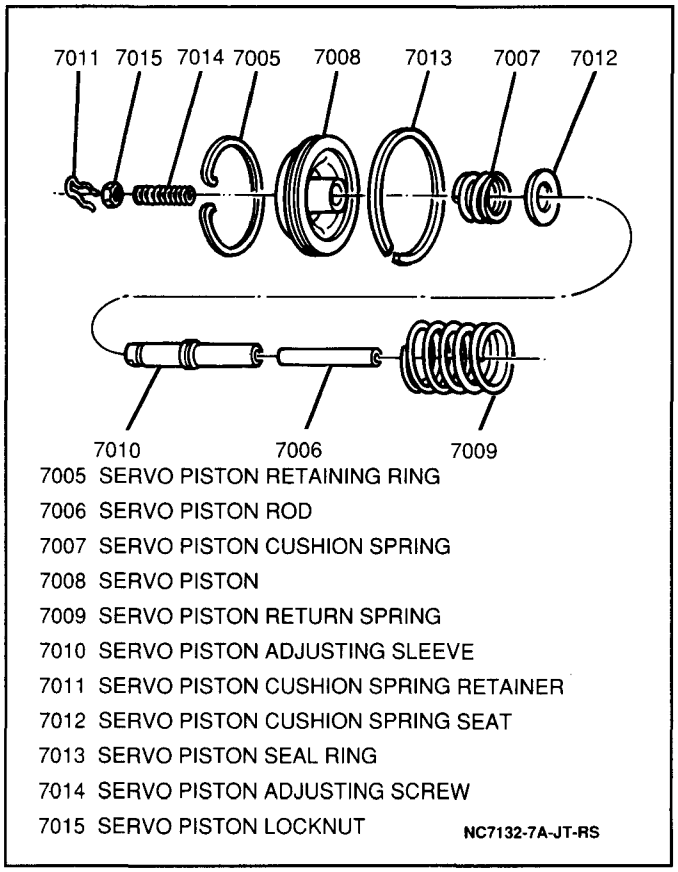

Figure 32 Disassembling Servo Piston

Inspect

1. Servo piston bore for nicks, burrs or side damage. Replace as necessary.
2. Servo piston adjusting sleeve for nicks or burrs. Replace as necessary.
3. Servo piston apply rod for nicks, burrs or scoring. Replace as necessary.

Install or Connect

Tools Required:
- J 23075 Servo and Third Clutch Piston Spring Compressor
- J 38428 Servo Piston Ring Installer
- J 36850 Transjel® Transmission Assembly Lubricant
- J 3387-2 Converter Housing Guide Pin

- Apply a thin coat of J 36850 to all servo components prior to assembly.

1. Servo piston adjusting screw, cushion spring, cushion spring seat, and servo piston adjusting sleeve, cushion spring seat, cushion spring and adjusting screw onto servo piston (Figure 32).

- Place the servo piston in a hydraulic press and using the J 23075, compress the servo piston cushion spring until the servo piston cushion spring retainer clip can be installed (Figure 31).

2. Servo piston cushion spring retainer clip onto the servo piston adjusting screw (Figure 31).
3. Locknut onto servo piston adjusting screw.
4. Servo piston, return spring and servo apply rod into servo bore in transmission case.
5. The J 23075 in conjunction with a J 38428 onto the transmission case with the offset of the J 23075 facing toward the corner of the transmission (Figure 33).

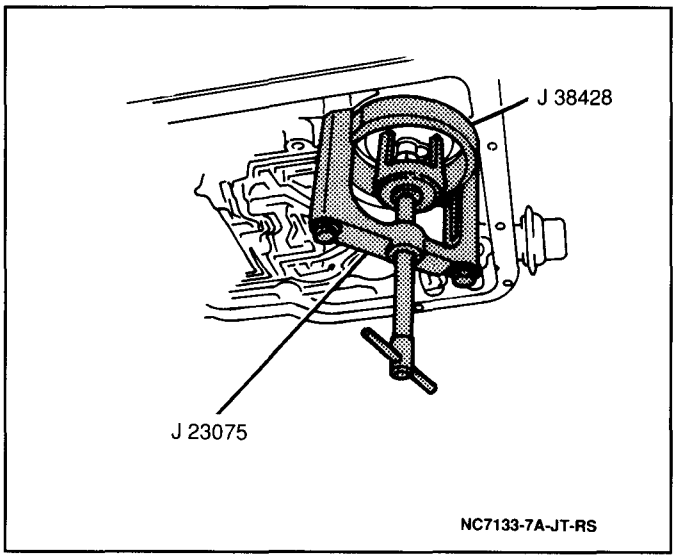

Figure 33 Installing Servo Piston Retaining Ring

- Tighten the J 23075 until the servo piston retaining ring can be installed (Figure 33).

6. Servo piston retaining ring into servo piston bore in transmission case.

- Loosen the J 23075 until the J 23075 and the J 38428 can be removed from the transmission case.

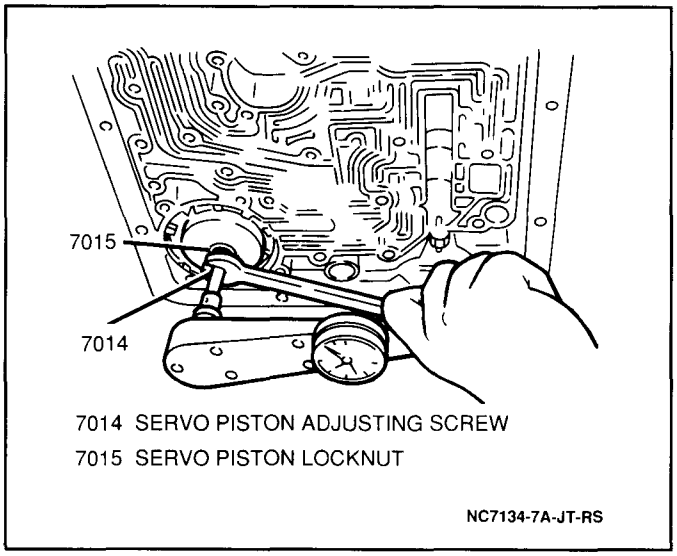

Figure 34 Adjusting Low Servo

Adjust

- Low servo by holding the servo piston adjusting sleeve with a standard open end wrench (Figure 34).

A. Loosen the locknut on the servo piston adjusting sleeve.
B. Tighten the servo piston adjusting screw to 24 N·m (18 lb.ft.) using a torque wrench with a 5 mm (3/16-inch) hex head socket making sure the locknut remains loose (Figure 34).
C. Back off the servo piston adjusting screw exactly five revolutions.
D. Tighten the locknut to 19 N·m (14 lb.ft.) while holding the servo piston adjusting screw and sleeve firmly.

NOTICE: Make sure to install the check ball in the transmission case passage when installing valve body (Figure 35). Use a small amount of J 36850 to retain the check ball in place during valve body installation. Failure to install check ball in its correct position may result in transmission shift failure.

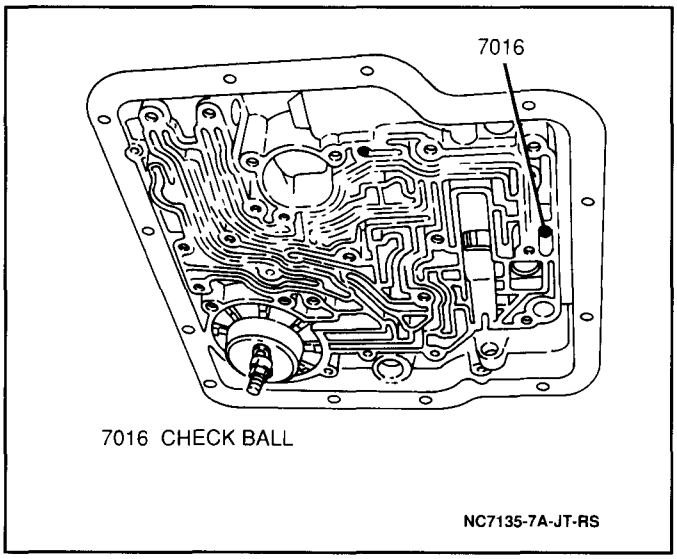

Figure 35 Check Ball Location

7. Check ball, transfer plate gaskets, transfer plate, valve body and manual detent roller onto transmission case aligning valve body with transmission case using the J 3387-2; secure with nine bolts (Figure 36).

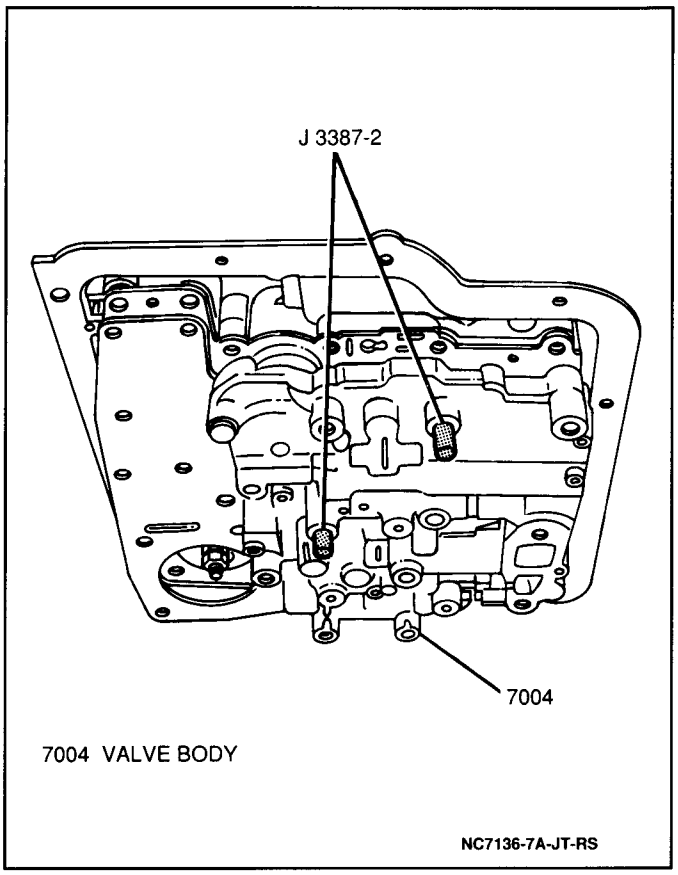

Figure 36 Installing Valve Body

Tighten

- Valve body bolts to 19 N·m (14 lb.ft.).

8. New servo piston cover gasket and servo piston cover onto transmission case; secure with four bolts (Figure 37).

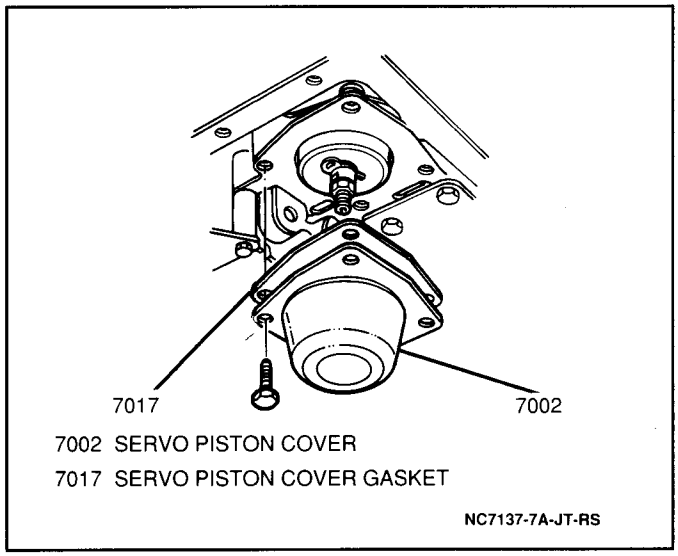

Figure 37 Installing Servo Piston Cover and Gasket

Tighten

- Servo piston cover bolts to 25 N·m (18 lb.ft.).

9. Reinforcement plate onto transmission case; secure with six bolts (Figure 28).

Tighten

- Reinforcement plate bolts to 19 N·m (14 lb.ft.).

10. TCC solenoid onto reinforcement plate; secure with two bolts.

Tighten

- TCC solenoid retaining bolts to 19 N·m (14 lb.ft.).

11. Electrical connectors to fluid pressure switch (Figure 27).
12. Electrical connector to TCC solenoid (Figure 27).

Inspect

- TCC solenoid pipe O-rings for cuts or other damage. Replace as necessary.

- Apply a thin coat of J 36850 to the TCC solenoid pipe O-rings.

13. Two TCC solenoid pipes into TCC solenoid, fluid pump and valve body (Figure 27).

Clean

1. Transmission fluid pan and magnet using solvent and air dry.
2. Transmission fluid filter screen with solvent and air dry.

14. New fluid filter screen gasket and fluid filter screen onto valve body; secure with three bolts (Figure 27).

Tighten

- Fluid filter screen bolts to 19 N·m (14 lb.ft.).

15. New transmission fluid pan gasket and fluid pan onto transmission. Refer to "Changing Fluid and Cleaning Filter Screen" earlier in this section.

- Lower vehicle.

16. Negative (-) battery cable.

Tighten

- Negative (-) battery cable-to-negative (-) battery terminal retainer to 15 N·m (11 lb.ft.).

- Refill transmission as necessary:
  A. Place vehicle on a level surface.
  B. Remove fluid level indicator.
  C. Add approximately 1.5 liters (1.6 qts.) of Dexron® II automatic transmission fluid GM P/N 1051855, or equivalent, into fluid filler tube.
  D. Install fluid level indicator into fluid filler tube.
  E. Apply parking brake and block vehicle wheels.
  F. With selector lever in "P" position, start engine. DO NOT race engine.

G. Run engine at idle and move selector lever through each range and return to the "P" position.
H. With engine running at idle, remove fluid level indicator from filler tube and wipe indicator off.
I. Reinsert fluid level indicator into filler tube making sure it is seated in its original position.
J. Remove the indicator and check the fluid level. The level should be between the "FULL HOT" and "LOW HOT" marks. If the level is below the "LOW HOT" mark, add fluid to bring the level to the "FULL HOT" mark. Bringing the fluid level from the "LOW HOT" mark to the "FULL HOT" mark requires 0.3 liters (0.3 qts.) of fluid. Use Dexron® II automatic transmission fluid GM P/N 1051855, or equivalent.

SPEEDOMETER DRIVEN GEAR (TWO-WHEEL DRIVE MODELS)

Figures 38 and 39

Remove or Disconnect

- Raise and suitably support vehicle. Refer to SECTION 0A.

1. Speedometer cable from speedometer driven gear case (Figure 38).

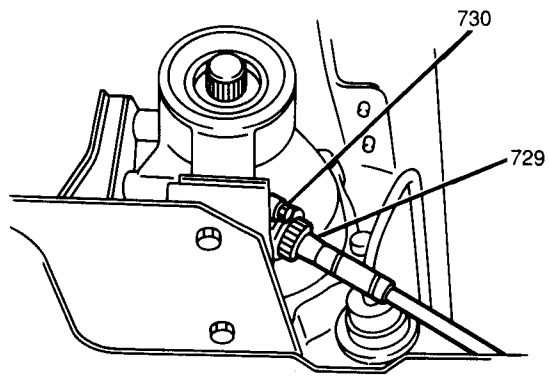

729 SPEEDOMETER CABLE
730 SPEEDOMETER GUIDE BRACKET BOLT
NC0712-7A-JT-RS

Figure 38 Speedometer Cable and Guide Bracket Bolt

2. One bolt and speedometer guide bracket from extension housing (Figure 38).
3. Speedometer driven gear case from extension housing.
4. Speedometer driven gear from speedometer driven gear case (Figure 39).

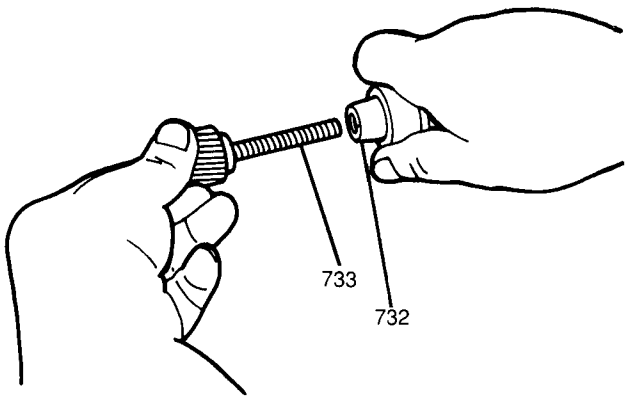

732 SPEEDOMETER DRIVEN GEAR CASE
733 SPEEDOMETER DRIVEN GEAR
NC7139-7A-JT-RS

Figure 39 Removing Speedometer Driven Gear From Speedometer Driven Gear Case

5. Speedometer driven gear case lip seal from speedometer driven gear case.

Inspect

1. Speedometer driven gear for excessive wear. Replace as necessary.
2. Speedometer driven gear case O-ring for cuts or other damage. Replace as necessary.

Install or Connect

Tool Required:
J 36850 Transjel® Transmission Assembly Lubricant

- Apply a thin coat of J 36850 to all speedometer driven gear components prior to assembly.

1. New speedometer driven gear case lip seal into speedometer driven gear case.
2. Speedometer driven gear into speedometer driven gear case.
3. Speedometer driven gear case into extension housing.
4. One bolt and speedometer guide bracket to extension housing (Figure 38).

Tighten

- Speedometer guide bracket bolt to 9 N·m (80 lb.in.).

5. Speedometer cable to speedometer driven gear case (Figure 38).

- Lower vehicle.

Speedometer Cable

For speedometer cable service procedures, refer to SECTION 8C.

EXTENSION HOUSING SEAL (TWO-WHEEL DRIVE MODELS)

Figures 40 and 41

Remove or Disconnect

Tools Required:
J 6125-B Slide Hammer
J 23129 Converter Housing Seal and Extension Housing Oil Seal Remover

- Raise and suitably support vehicle. Refer to SECTION 0A.
- Place an index mark (reference mark) on the pinion flange yoke of the rear propeller shaft and the differential pinion flange to ensure correct rear propeller shaft installation.

1. Four bolts, four nuts and rear propeller shaft from vehicle.
2. Extension housing seal from extension housing using a J 23129 with a J 6125-B (Figure 40).

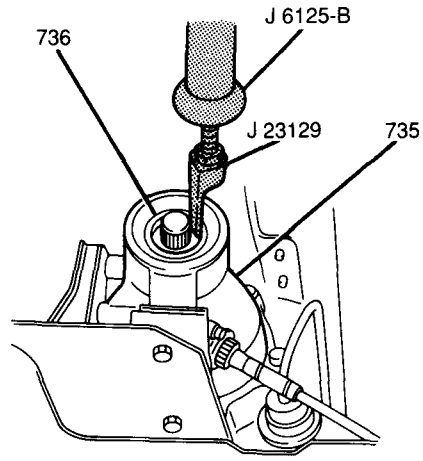

735 EXTENSION HOUSING
736 EXTENSION HOUSING SEAL NC7140-7A-JT-RS

Figure 40 Removing Extension Housing Seal

- Extension housing seal surface for cracks or other damage. Replace as necessary.

Install or Connect

Tools Required:
J 21426 Extension Housing Seal Installer
J 36850 Transjel® Transmission Assembly Lubricant

- Apply a thin coat of J 36850 to the extension housing seal surface.

1. New extension housing seal using a J 21426 (Figure 41).

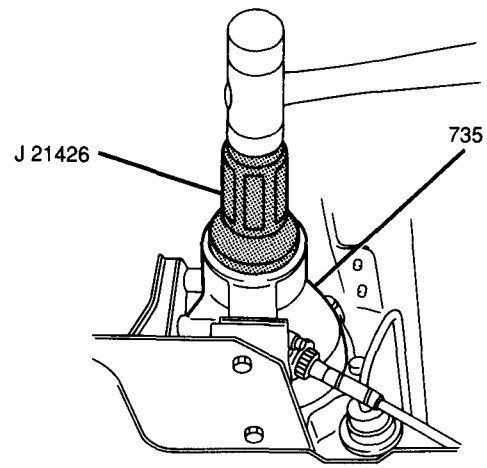

735 EXTENSION HOUSING NC0715-7A-JT-RS

Figure 41 Installing Extension Housing Seal

- Apply J 36850 to the new extension housing seal lip.

2. Rear propeller shaft into vehicle aligning index marks made during rear propeller shaft removal; secure with four bolts and four nuts.

Tighten

- Rear propeller shaft bolts and nuts to 50 N·m (37 lb.ft.).

- Lower vehicle.

EXTENSION HOUSING (TWO-WHEEL DRIVE MODELS)

Figures 38 and 42 through 47

Remove or Disconnect

Tools Required:
J 23062-14 Extension Housing Bushing Remover and Installer
J 8092 Drive Handle

- Raise and suitably support vehicle. Refer to SECTION 0A.

- Place an index mark (reference mark) on the pinion flange yoke of the rear propeller shaft and the differential pinion flange to ensure correct rear propeller shaft installation.

1. Four bolts, four nuts and rear propeller shaft from vehicle.
2. Transmission fluid pan and gasket and drain transmission fluid. Refer to "Changing Fluid and Cleaning Filter Screen" earlier in this section.

- Install transmission fluid pan and new gasket onto transmission to support transmission assembly on hydraulic jack; secure with twelve bolts.

Tighten

- Transmission fluid pan bolts to 13 N·m (115 lb.in.).

3. Speedometer cable from speedometer driven gear case (Figure 38).
4. One bolt and speedometer guide bracket from transmission (Figure 38).
5. Speedometer driven gear case from transmission extension housing.
6. Two bolts, two nuts and exhaust pipe bracket from extension housing and catalytic converter.

- Support transmission with a suitable hydraulic jack.

7. Two bolts from rear transmission mount.
8. Four bolts and rear transmission crossmember from vehicle.
9. Seven bolts, extension housing and gasket from transmission case (Figure 42).

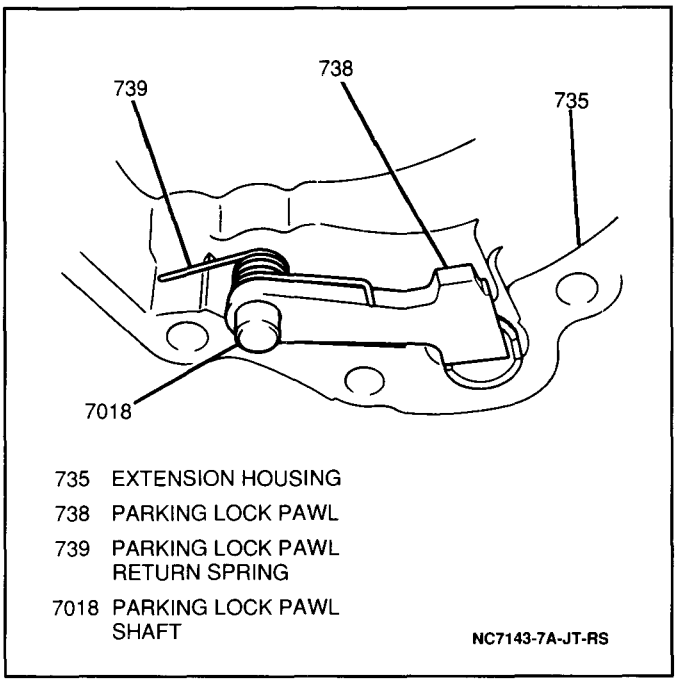

Figure 43 Parking Lock Pawl, Parking Lock Pawl Shaft and Return Spring

10. Parking lock pawl, parking lock pawl shaft and parking lock pawl return spring from extension housing (Figure 43).
11. Extension housing seal from extension housing using a J 23129 in conjunction with a J 6125-B (Figure 44).

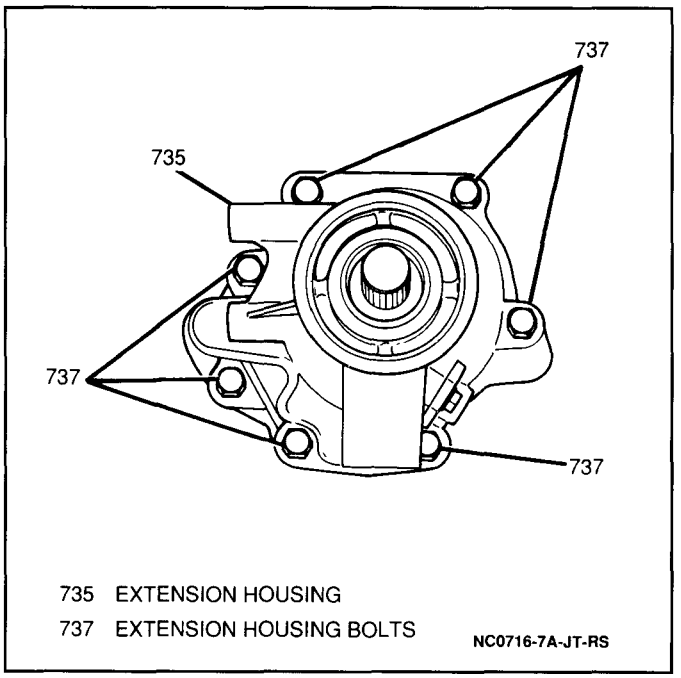

Figure 42 Extension Housing Bolts

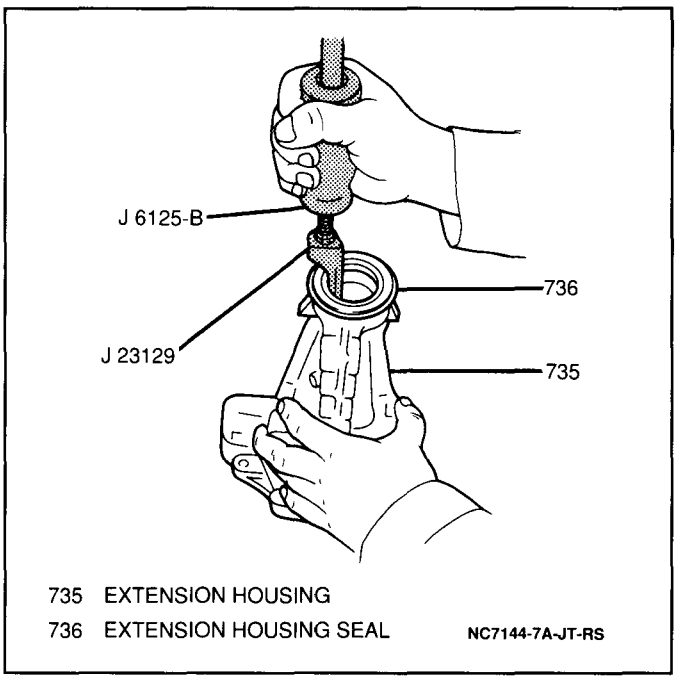

Figure 44 Removing Extension Housing Seal

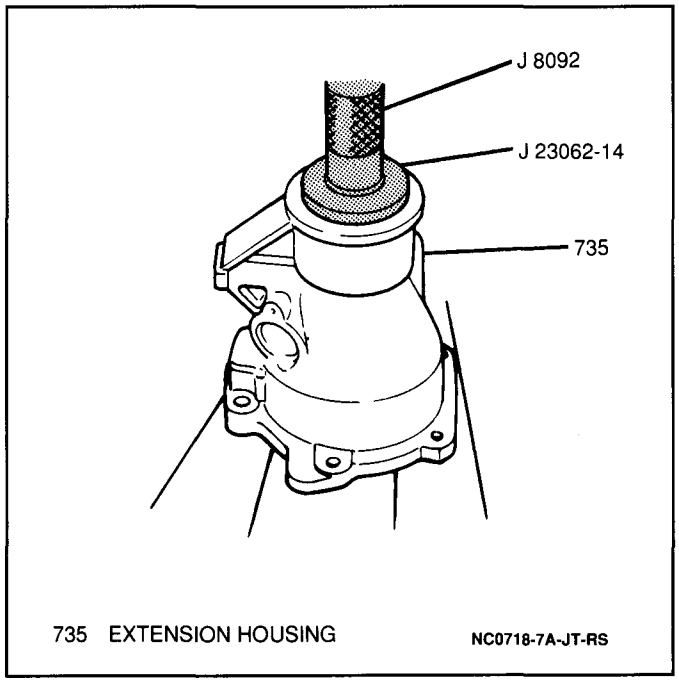

Figure 45 Removing Extension Bearing

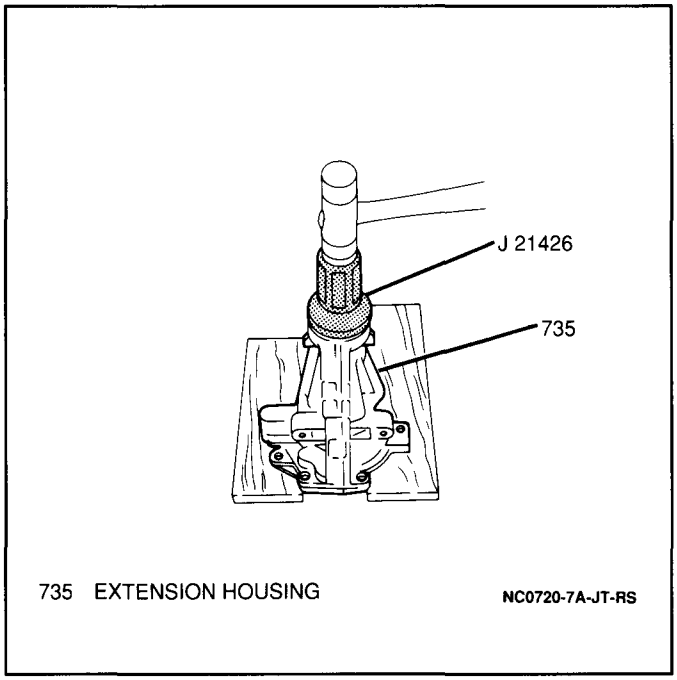

Figure 46 Installing Extension Housing Seal

12. Extension bearing from extension housing using a J 23062-14 with a J 8092 (Figure 45).

Clean

- Extension housing and transmission case mating surfaces.

Inspect

- Extension housing for cracks or other damage. Replace as necessary.

Install or Connect

Tools Required:
- J 21426 Extension Housing Seal Installer
- J 36850 Transjel® Transmission Assembly Lubricant
- J 23062-14 Extension Housing Bushing Remover and Installer
- J 8092 Driver Handle

1. Extension bearing into extension housing using a J 23062-14 with a J 8092.
2. Extension housing seal into extension housing using a J 21426 (Figure 46).

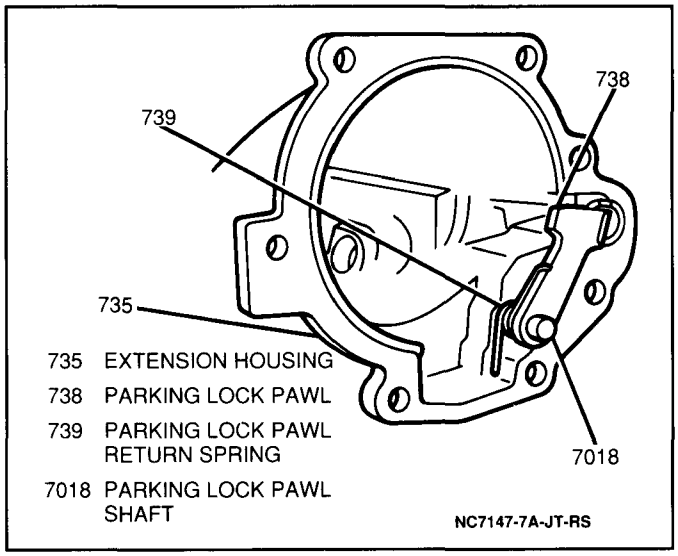

Figure 47 Parking Lock Pawl Return Spring, Parking Lock Pawl Shaft and Parking Lock Pawl Installation

3. Parking lock pawl return spring, parking lock pawl shaft and parking lock pawl into extension housing (Figure 47).

4. New extension housing gasket and extension housing to transmission case; secure with seven bolts (Figure 42).

Tighten

- Extension housing bolts to 31 N·m (23 lb.ft.).

5. Rear transmission crossmember to undercarriage; secure with four bolts.

Tighten

- Rear transmission crossmember bolts to 60 N·m (45 lb.ft.).

6. Two bolts to rear transmission mount.

Tighten

- Rear transmission mount bolts to 60 N·m (45 lb.ft.).

- Remove hydraulic jack from under transmission.

7. Exhaust pipe bracket to extension housing and catalytic converter; secure with two bolts and two nuts.

Tighten

- Exhaust pipe bracket bolts and nuts to 23 N·m (17 lb.ft.).

- Apply J 36850 to the speedometer driven gear case O-ring.

8. Speedometer driven gear case into extension housing.
9. One bolt and speedometer guide bracket to extension housing (Figure 38).

Tighten

- Speedometer guide bracket bolt to 10 N·m (89 lb.in.).

10. Speedometer cable to speedometer driven gear case (Figure 38).
11. New transmission fluid pan gasket and fluid pan onto transmission. Refer to "Changing Fluid and Cleaning Filter Screen" earlier in this section.
12. Rear propeller shaft into vehicle aligning index marks made during rear propeller shaft removal; secure with four bolts and four nuts.

Tighten

- Rear propeller shaft bolts and nuts to 50 N·m (37 lb.ft.).

- Lower vehicle.
- Refill transmission as necessary:
  A. Place vehicle on a level surface.
  B. Remove fluid level indicator.
  C. Add approximately 1.5 liters (1.6 qts.) of Dexron® II automatic transmission fluid GM P/N 1051855, or equivalent, into fluid filler tube.
  D. Install fluid level indicator into fluid filler tube.
  E. Apply parking brake and block vehicle wheels.
  F. With selector lever in "P" position, start engine. DO NOT race engine.
  G. Run engine at idle and move selector lever through each range and return to the "P" position.
  H. With engine running at idle, remove fluid level indicator from filler tube and wipe indicator off.
  I. Reinsert fluid level indicator into filler tube making sure it is seated in its original position.
  J. Remove the indicator and check the fluid level. The level should be between the "FULL HOT" and "LOW HOT" marks. If the level is below the "LOW HOT" mark, add fluid to bring the level to the "FULL HOT" mark. Bringing the fluid level from the "LOW HOT" mark to the "FULL HOT" mark requires 0.3 liters (0.3 qts.) of fluid. Use Dexron® II automatic transmission fluid GM P/N 1051855, or equivalent.

TRANSFER ADAPTER CASE SEAL (FOUR-WHEEL DRIVE MODELS)

Figures 48 and 51

Remove or Disconnect

Tools Required:
J 6125-B Slide Hammer
J 23129 Converter Housing Seal and Extension Housing Oil Seal Remover

- Raise and suitably support vehicle. Refer to SECTION 0A.
- Support transmission with a suitable hydraulic jack.

1. Transfer case from vehicle. Refer to SECTION 7D.
2. Transfer adapter case seal from transfer adapter case using a J 23129 with a J 6125-B.

Inspect

- Transfer adapter case for cracks or other damage. Replace as necessary.

Install or Connect

Tools Required:
J 35538 Axle Shaft Seal Installer
J 36850 Transjel® Transmission Assembly Lubricant

- Apply a thin coat of J 63850 to the transfer adapter case seal surface.

1. New transfer adapter case seal into the transfer adapter case using a J 35538 (Figure 51).

- Apply J 36850 to the new transfer adapter case seal lip.

2. Transfer case into vehicle. Refer to SECTION 7D.

- Remove hydraulic jack from under transmission.
- Lower vehicle.

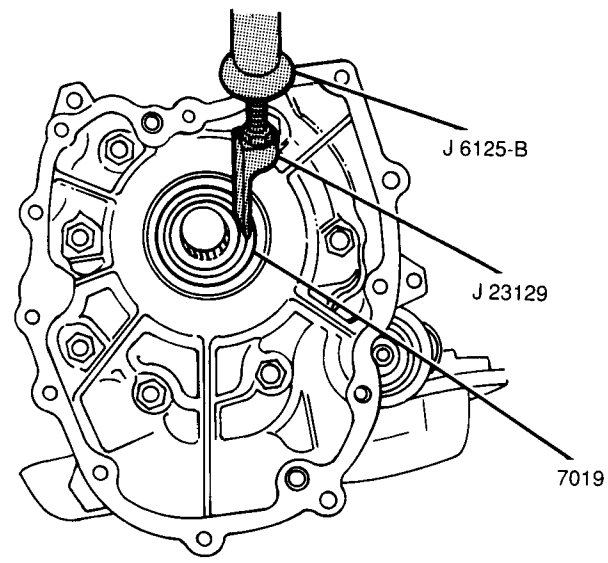

7019 TRANSFER ADAPTER CASE SEAL

NC7148-7A-JT-RS

Figure 48 Removing Transfer Adapter Case Seal

TRANSFER ADAPTER CASE (FOUR-WHEEL DRIVE MODELS)

Figures 48 through 51

Remove or Disconnect

Tools Required:
J 6125-B Slide Hammer
J 23129 Converter Housing Seal and Extension Housing Oil Seal Remover

- Raise and suitably support vehicle. Refer to SECTION 0A.
- Place a drain pan or suitable container under transmission fluid pan.

1. Transmission fluid pan and gasket and drain transmission fluid. Refer to "Changing Fluid and Cleaning Filter Screen" earlier in this section.

- Install transmission fluid pan and new gasket onto transmission to support transmission assembly on hydraulic jack; secure with twelve bolts.

Tighten

- Transmission fluid pan bolts to 13 N·m (115 lb.in.).

- Remove drain pan from under transmission fluid pan.
- Support transmission with a suitable hydraulic jack.

2. Transfer case from vehicle. Refer to SECTION 7D.
3. Two bolts, two nuts and exhaust pipe bracket from transfer adapter case and catalytic converter.
4. Seven bolts, transfer adapter case and gasket from transmission case (Figure 49).
5. Parking lock pawl, parking lock pawl shaft and parking lock pawl return spring from transfer adapter case (Figure 50).
6. Transfer adapter case seal from transfer adapter case using a J 6125-B with a J 23129 (Figure 48).

Clean

- Transfer adapter case and transmission case mating surfaces.

Inspect

- Transfer adapter case for cracks or other damage. Replace as necessary.

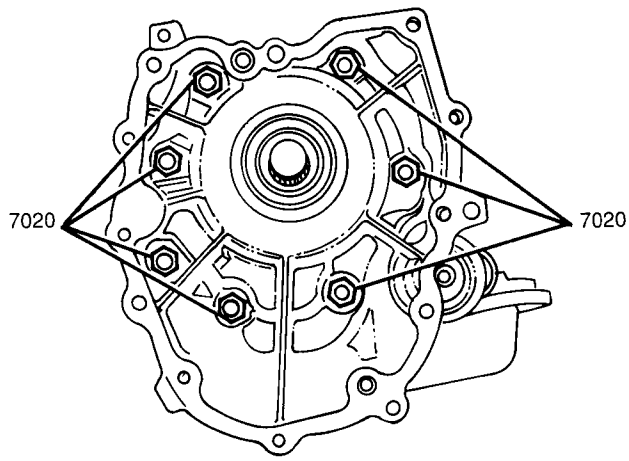

7020 TRANSFER ADAPTER CASE BOLTS

NC7149-7A-JT-RS

Figure 49 Transfer Adapter Case Bolts

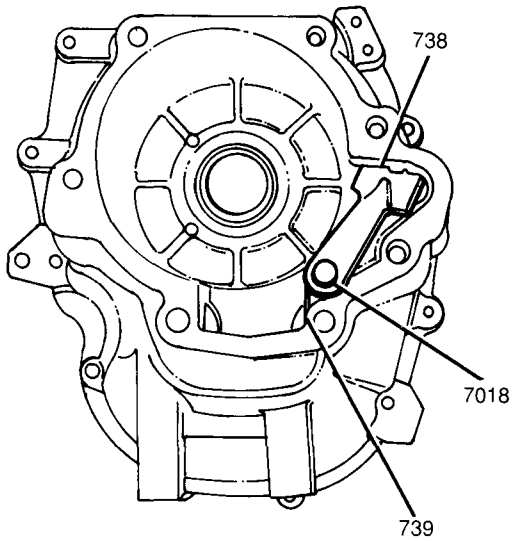

738 PARKING LOCK PAWL
739 PARKING LOCK PAWL RETURN SPRING
7018 PARKING LOCK PAWL SHAFT
NC7150-7A-JT-RS

Figure 50 Parking Lock Pawl, Parking Lock Pawl Shaft and Parking Lock Pawl Return Spring

Install or Connect

Tools Required:
J 35538 Axle Shaft Seal Installer
J 36850 Transjel® Transmission Assembly Lubricant

- Apply a thin coat of J 63850 to the transfer adapter case seal surface.

1. New transfer adapter case seal into the transfer adapter case using a J 35538 (Figure 51).

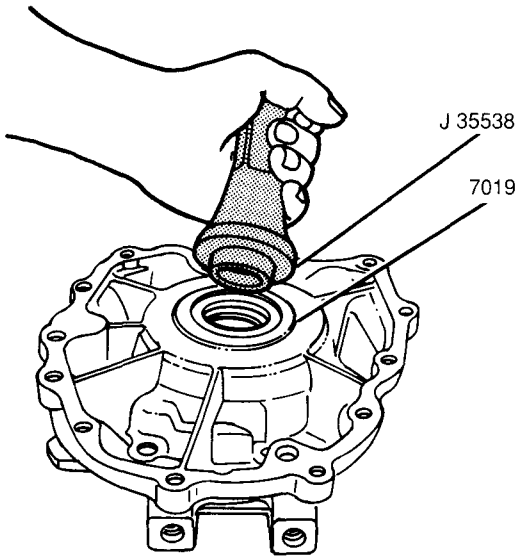

7019 TRANSFER ADAPTER CASE SEAL
NC7151-7A-JT-RS

Figure 51 Installing New Transfer Adapter Case Seal

- Apply J 36850 to the new transfer adapter case seal lip.

2. Parking lock pawl return spring, parking lock pawl shaft and parking lock pawl into transfer adapter case (Figure 50).
3. New transfer adapter case gasket and transfer adapter case to transmission case; secure with seven bolts (Figure 49).

Tighten

- Transfer adapter case bolts to 31 N·m (23 lb.ft.).

4. Exhaust pipe bracket to transfer adapter case and catalytic converter; secure with two bolts and two nuts.

Tighten

- Exhaust pipe bracket bolts and nuts to 23 N·m (17 lb.ft.).

5. Transfer case into vehicle. Refer to SECTION 7D.
- Remove hydraulic jack from under transmission.
- Lower vehicle.
- Refill transmission as necessary:
  A. Place vehicle on a level surface.
  B. Remove fluid level indicator.
  C. Add approximately 1.5 liters (1.6 qts.) of Dexron® II automatic transmission fluid GM P/N 1051855, or equivalent, into fluid filler tube.
  D. Install fluid level indicator into fluid filler tube.
  E. Apply parking brake and block vehicle wheels.
  F. With selector lever in "P" position, start engine. DO NOT race engine.
  G. Run engine at idle and move selector lever through each range and return to the "P" position.
  H. With engine running at idle, remove fluid level indicator from filler tube and wipe indicator off.
  I. Reinsert fluid level indicator into filler tube making sure it is seated in its original position.
  J. Remove the indicator and check the fluid level. The level should be between the "FULL HOT" and "LOW HOT" marks. If the level is below the "LOW HOT" mark, add fluid to bring the level to the "FULL HOT" mark. Bringing the fluid level from the "LOW HOT" mark to the "FULL HOT" mark requires 0.3 liters (0.3 qts.) of fluid. Use Dexron® II automatic transmission fluid GM P/N 1051855, or equivalent.

SPEEDOMETER DRIVE GEAR (TWO-WHEEL DRIVE MODELS)

Figure 52

Remove or Disconnect

- Raise and suitably support vehicle. Refer to SECTION 0A.
1. Extension housing from transmission case. Refer to "Extension Housing" earlier in this section.
2. Two speedometer drive gear retaining rings and speedometer drive gear from transmission output shaft (Figure 52).

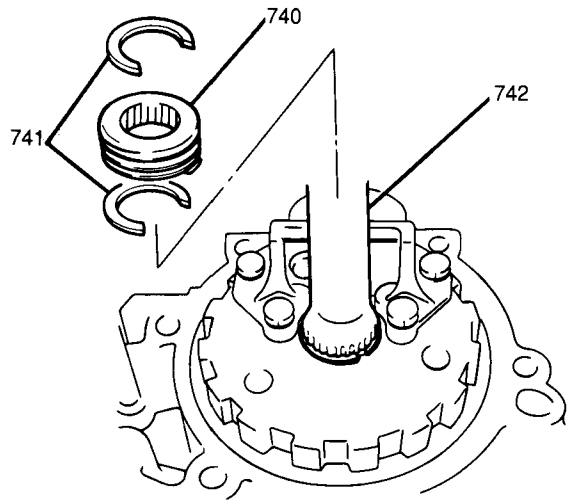

740 SPEEDOMETER DRIVE GEAR
741 SPEEDOMETER DRIVE GEAR RETAINING RING
742 OUTPUT SHAFT
NC7152-7A-JT-RS

Figure 52 Speedometer Drive Gear Removal

Inspect

- Speedometer drive gear for abnormal wear or damage. Replace as necessary.

Install or Connect

1. Speedometer drive gear onto transmission output shaft; secure with two speedometer drive gear retaining rings (Figure 52).
2. Extension housing to transmission case. Refer to "Extension Housing" earlier in this section.
- Lower vehicle.
- Refill transmission as necessary:
  A. Place vehicle on a level surface.
  B. Remove fluid level indicator.
  C. Add approximately 1.5 liters (1.6 qts.) of Dexron® II automatic transmission fluid GM P/N 1051855, or equivalent, into fluid filler tube.
  D. Install fluid level indicator into fluid filler tube.
  E. Apply parking brake and block vehicle wheels.
  F. With selector lever in "P" position, start engine. DO NOT race engine.
  G. Run engine at idle and move selector lever through each range and return to the "P" position.
  H. With engine running at idle, remove fluid level indicator from filler tube and wipe indicator off.

I. Reinsert fluid level indicator into filler tube making sure it is seated in its original position.
J. Remove the indicator and check the fluid level. The level should be between the "FULL HOT" and "LOW HOT" marks. If the level is below the "LOW HOT" mark, add fluid to bring the level to the "FULL HOT" mark. Bringing the fluid level from the "LOW HOT" mark to the "FULL HOT" mark requires 0.3 liters (0.3 qts.) of fluid. Use Dexron® II automatic transmission fluid GM P/N 1051855, or equivalent.

GOVERNOR ASSEMBLY

Figures 52 through 55

Remove or Disconnect

- Raise and suitably support vehicle. Refer to SECTION 0A.

1. Extension housing from transmission case (two-wheel drive models). Refer to "Extension Housing" earlier in this section.
2. Transfer adapter case from transmission case (four-wheel drive models). Refer to "Transfer Adapter Case" earlier in this section.
3. Two speedometer drive gear retaining rings and speedometer drive gear from transmission output shaft (Figure 52).
4. Governor ring and governor hub from transmission output shaft (Figure 53).

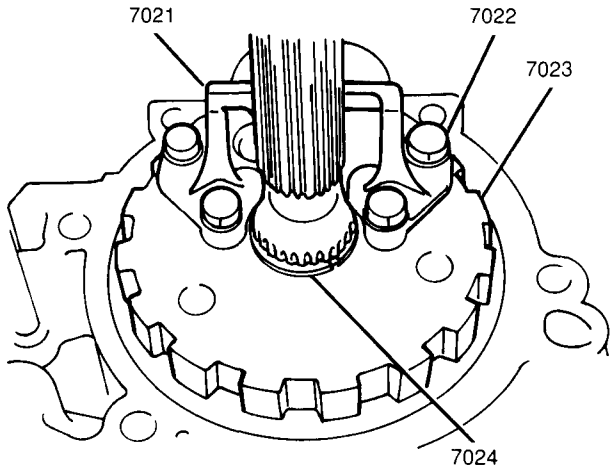

7021 GOVERNOR ASSEMBLY
7022 GOVERNOR ASSEMBLY BOLT
7023 GOVERNOR HUB
7024 GOVERNOR RING

NC7153-7A-JT-RS

Figure 53 Governor Hub and Governor Ring

5. Four bolts, governor assembly and gasket from governor hub.
6. Governor fluid screen from governor hub (Figure 54).
7. Secondary valve retainer, secondary spring, secondary valve and primary valve from governor body (Figure 55).

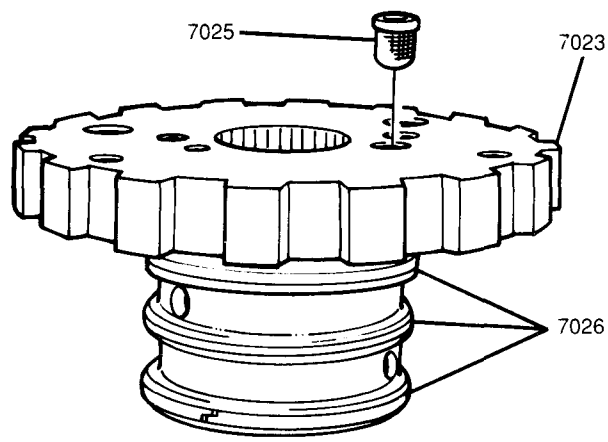

7023 GOVERNOR HUB
7025 GOVERNOR FLUID SCREEN
7026 GOVERNOR HUB SEAL RINGS

NC7154-7A-JT-RS

Figure 54 Removing Governor Fluid Screen

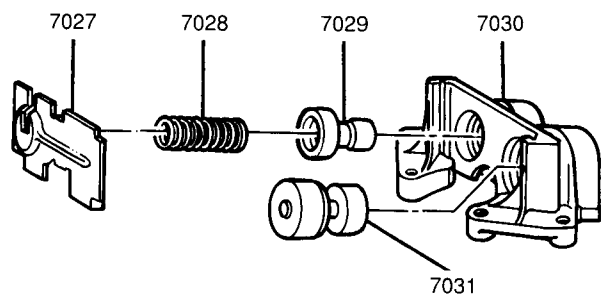

7027 SECONDARY VALVE RETAINER
7028 SECONDARY SPRING
7029 SECONDARY VALVE
7030 GOVERNOR BODY
7031 PRIMARY VALVE

NC7155-7A-JT-RS

Figure 55 Disassembling Governor Assembly

Clean

- All governor components with solvent and air dry.

Inspect

1. Governor hub seal rings for cuts or other damage. Replace as necessary (Figure 54).
2. Primary and secondary valves for nicks or burrs. Replace governor assembly as necessary.
3. Fluid passages and valve bores in governor body for nicks, burrs or varnish. Replace governor assembly as necessary.

Install or Connect

Tool Required:
J 36850 Transjel® Transmission Assembly Lubricant

- Apply a thin coat of J 36850 to the primary and secondary valves.

1. Primary valve, secondary valve, secondary spring and secondary valve retainer into governor body (Figure 55).
2. Governor fluid screen into governor hub (Figure 54).
3. New governor assembly gasket and governor assembly onto governor hub; secure with four bolts.

Tighten

- Governor assembly bolts to 9 N·m (80 lb.in.).

- Apply J 36850 to the governor seal rings on the governor hub.

4. Governor hub onto transmission output shaft; secure with governor ring (Figure 53).
5. Speedometer drive gear onto transmission output shaft; secure with two speedometer drive gear retaining rings (Figure 52).
6. Transfer adapter case to transmission case (four-wheel drive models). Refer to "Transfer Adapter Case" earlier in this section.
7. Extension housing to transmission case (two-wheel drive models). Refer to "Extension Housing" earlier in this section.

- Lower vehicle.
- Refill transmission as necessary:
  - A. Place vehicle on a level surface.
  - B. Remove fluid level indicator.
  - C. Add approximately 1.5 liters (1.6 qts.) of Dexron® II automatic transmission fluid GM P/N 1051855, or equivalent, into fluid filler tube.
  - D. Install fluid level indicator into fluid filler tube.
  - E. Apply parking brake and block vehicle wheels.
  - F. With selector lever in "P" position, start engine. DO NOT race engine.
  - G. Run engine at idle and move selector lever through each range and return to the "P" position.
  - H. With engine running at idle, remove fluid level indicator from filler tube and wipe indicator off.
  - I. Reinsert fluid level indicator into filler tube making sure it is seated in its original position.
  - J. Remove the indicator and check the fluid level. The level should be between the "FULL HOT" and "LOW HOT" marks. If the level is below the "LOW HOT" mark, add fluid to bring the level to the "FULL HOT" mark. Bringing the fluid level from the "LOW HOT" mark to the "FULL HOT" mark requires 0.3 liters (0.3 qts.) of fluid. Use Dexron® II automatic transmission fluid GM P/N 1051855, or equivalent.

FLUID FILLER TUBE

Remove or Disconnect

- Raise and suitably support vehicle. Refer to SECTION 0A.
- One bolt and fluid filler tube from transmission case.

Inspect

- Fluid filler tube O-ring for cuts or other damage. Replace as necessary.

Install or Connect

Tool Required:
J 36850 Transjel® Transmission Assembly Lubricant

- Apply J 36850 to the fluid filler tube O-ring.
- Fluid filler tube into transmission case; secure with one bolt.

Tighten

- Fluid filler tube bracket bolt to 23 N·m (17 lb.ft.).

- Lower vehicle.

VALVE BODY REMOVAL

Figures 27 and 28

Remove or Disconnect

1. Negative (-) battery cable.

- Raise and suitably support vehicle. Refer to SECTION 0A.

2. Transmission fluid pan and gasket from transmission. Refer to "Changing Fluid and Cleaning Filter Screen" earlier in this section.
3. Three bolts, fluid filter screen and gasket from valve body (Figure 27).
4. Two TCC solenoid pipes from TCC solenoid, fluid pump and valve body (Figure 27).
5. Electrical connector from TCC solenoid (Figure 27).
6. Electrical connectors from fluid pressure switch (Figure 27).
7. Two bolts and TCC solenoid from reinforcement plate.
8. Fluid pressure switch from valve body by turning counterclockwise (Figure 27).
9. Six bolts and reinforcement plate from transmission case (Figure 28).
10. Four bolts, servo piston cover and gasket from transmission case (Figure 28).

NOTICE: Disconnect the manual valve link from the parking lock and range selector lever while lowering the valve body. Use caution not to lose the check ball in the transmission case passage when removing valve body. The check ball should drop out of the case passage onto the top of the valve body upon valve body removal.

11. Nine bolts, manual detent roller, valve body, transfer plate, transfer plate gaskets and one check ball from transmission case (Figure 28).

7004 VALVE BODY
7032 MANUAL VALVE
7033 MANUAL VALVE LINK
7034 1–2 ACCUMULATOR PISTON ASSEMBLY
7035 RETAINING PIN
7036 1–2 ACCUMULATOR PLUG
7037 1–2 ACCUMULATOR VALVE
7038 1–2 ACCUMULATOR VALVE SPRING
7039 HIGH SPEED DOWNSHIFT TIMING VALVE SPRING
7040 HIGH SPEED DOWNSHIFT TIMING VALVE
7041 TIMING AND CONTROL VALVE PLUG
7042 LOW SPEED DOWNSHIFT TIMING VALVE
7043 LOW SPEED DOWNSHIFT TIMING VALVE SPRING
7044 MANUAL LOW CONTROL VALVE SPRING
7045 MANUAL LOW CONTROL VALVE
7046 REVERSE CONTROL VALVE
7047 1–2 SHIFT VALVE
7048 1–2 SHIFT CONTROL VALVE SECONDARY SPRING
7049 1–2 SHIFT CONTROL VALVE
7050 1–2 SHIFT CONTROL VALVE SLEEVE
7051 2–3 SHIFT VALVE
7052 2–3 SHIFT CONTROL VALVE SPRING SEAT
7053 2–3 SHIFT CONTROL VALVE SPRING
7054 2–3 SHIFT CONTROL VALVE
7055 2–3 SHIFT CONTROL VALVE SLEEVE
7056 3–2 CONTROL VALVE
7057 3–2 CONTROL VALVE SPRING
7058 3–2 CONTROL VALVE PLUG
7059 DETENT PRESSURE REGULATOR VALVE
7060 DETENT PRESSURE REGULATOR VALVE SPRING
7061 1–2 SHIFT CONTROL VALVE PRIMARY SPRING

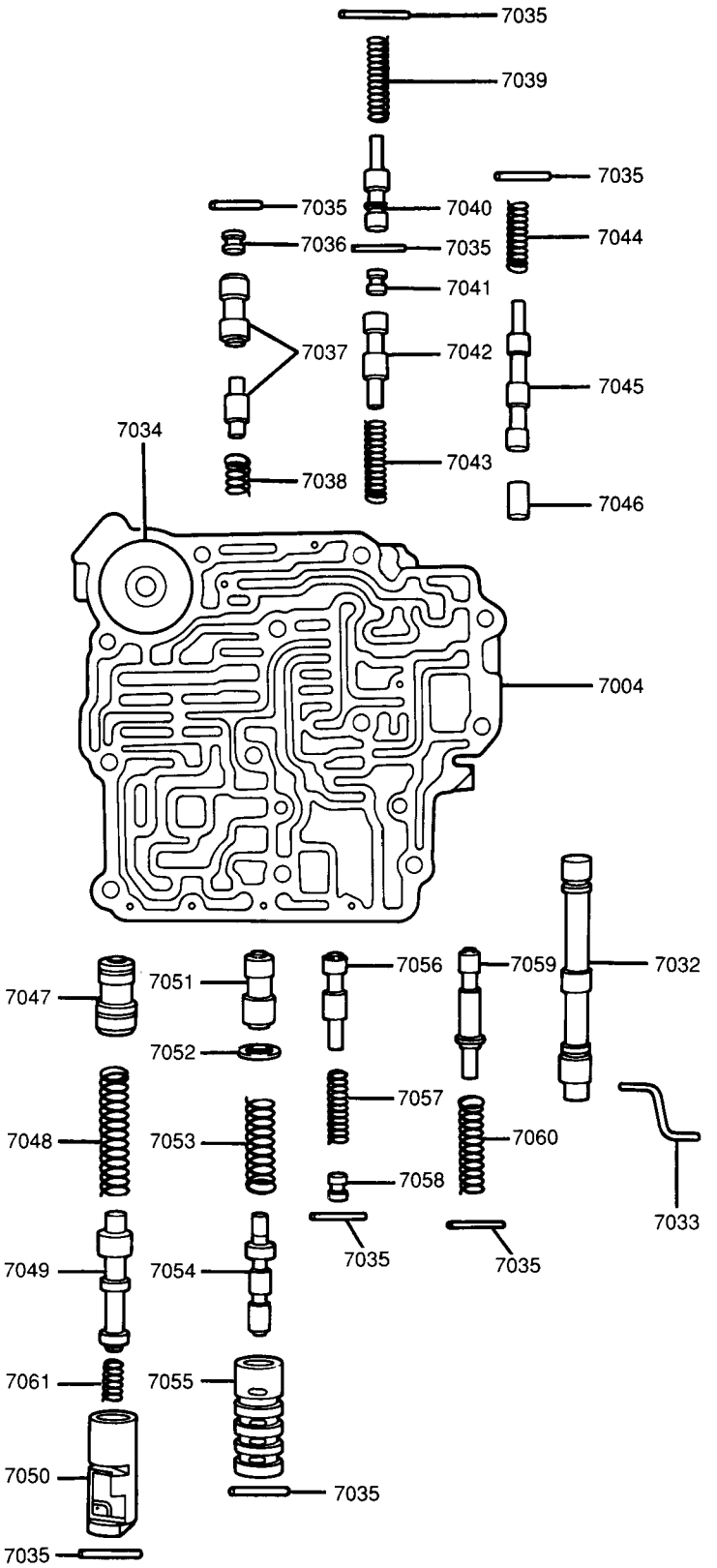

Figure 56 Valve Body Components

Valve Body Disassembly

Figures 56, 57 and 58

Remove or Disconnect

1. Manual valve and manual valve link from valve body (Figure 56).
2. Two bolts, transfer plate and transfer plate gaskets from valve body (Figure 57).

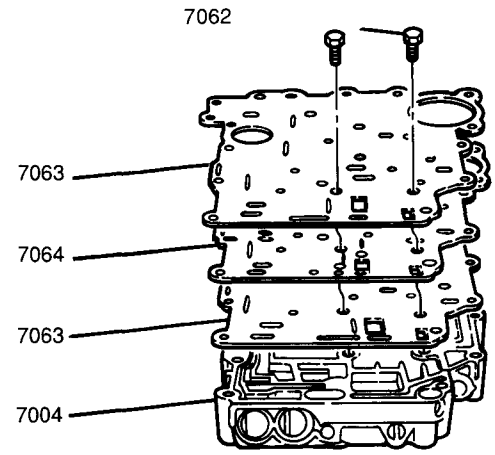

7004 VALVE BODY
7062 TRANSFER PLATE BOLTS
7063 TRANSFER PLATE GASKET
7064 TRANSFER PLATE
NC7157-7A-JT-RS

Figure 57 Removing Transfer Plate Retaining Bolts

3. Retaining pin, 1-2 accumulator valve plug, 1-2 accumulator valve and 1-2 accumulator valve spring from valve body (Figure 56).
4. Retaining pin, high speed downshift timing valve spring, downshift timing valve, retaining pin, timing and control valve plug, low speed downshift timing valve and downshift timing valve spring from valve body (Figure 56).
5. Retaining pin, manual low control valve spring, manual low control valve and reverse control valve from valve body (Figure 56).
6. Retaining pin, detent pressure regulator valve spring and detent pressure regulator valve from valve body (Figure 56).
7. Retaining pin, 3-2 control valve plug, 3-2 control valve spring and 3-2 control valve from valve body (Figure 56).
8. Retaining pin, 2-3 shift control valve sleeve, 2-3 shift control valve, 2-3 control valve spring, 2-3 control valve spring seat and 2-3 shift valve from valve body (Figure 56).
9. Retaining pin, 1-2 shift control valve sleeve, 1-2 shift control valve primary spring, 1-2 shift control valve, 1-2 shift control valve secondary spring and 1-2 shift valve from valve body (Figure 56).

Clean

1. All valve body components thoroughly with solvent and air dry.
2. 1-2 accumulator piston assembly by pouring solvent into the 1-2 accumulator passage in the valve body and repeatedly compressing and decompressing the 1-2 accumulator piston. This will flush out any dirt or foreign material in the 1-2 accumulator piston chamber. Make sure all solvent is drained out of the 1-2 accumulator piston chamber after cleaning (Figure 58).

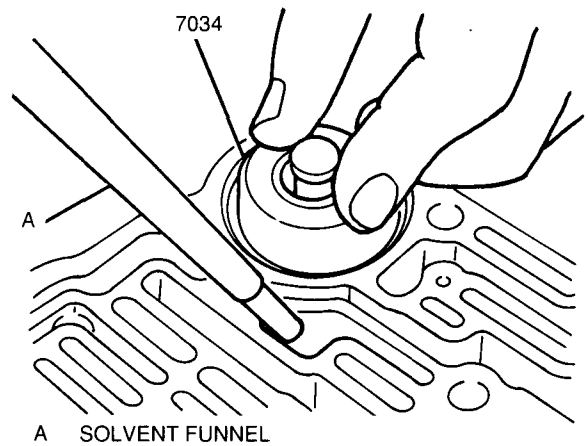

A SOLVENT FUNNEL
7034 1–2 ACCUMULATOR PISTON ASSEMBLY
NC7158-7A-JT-RS

Figure 58 Cleaning 1-2 Accumulator Piston

Inspect

Tool Required:
J 38549 Transmission Valve Lapping Compound

1. Valve body for:
- Distorted or damaged valve bores.
- Blocked fluid passages.
2. All valves, springs and attaching parts for unusual wear or damage. Replace as necessary.
3. All valves for fit in their respective bores. If valves stick or do not move back and forth smoothly in their bores, apply J 38549 to any sticking valve twisting the valve back and forth in its bore until valve operates smoothly.

NOTICE: The use of a honing stone, fine sandpaper or crocus cloth is not recommended for servicing stuck valves. All valve lands have sharply machined corners that are necessary to "cleaning" the bore. If these corners are rounded, foreign material could wedge between the valve and the bore causing the valve to stick. If it is necessary to clean a valve, J 38549 should be used. After a valve has been cleaned, make sure all traces of J 38549 have been removed before valve body assembly.

Valve Body Assembly

Figures 56 and 57

Install or Connect

Tools Required:
J 36850 Transjel® Transmission Assembly Lubricant
J 3387-2 Converter Housing Guide Pin

- Apply a thin coat of J 36850 to all valve body components prior to assembly.

1. 1-2 shift valve, 1-2 shift control valve secondary spring, 1-2 shift control valve, 1-2 shift control valve primary spring and 1-2 shift control valve sleeve into valve body; secure with retaining pin (Figure 56).
2. 2-3 shift valve, 2-3 control valve spring seat, 2-3 control valve spring, 2-3 shift control valve and 2-3 shift control sleeve into valve body; secure with retaining pin (Figure 56).
3. 3-2 control valve, 3-2 control valve spring and 3-2 control valve plug into valve body; secure with retaining pin (Figure 56).
4. Detent pressure regulator valve and detent pressure regulator valve spring into valve body; secure with retaining pin (Figure 56).
5. Reverse control valve, manual low control valve and manual low control valve spring into valve body; secure with retaining pin (Figure 56).
6. Downshift timing valve spring, low speed downshift timing valve, timing and control valve plug, retaining pin, high speed downshift timing valve and downshift timing valve spring into valve body; secure with retaining pin (Figure 56).
7. 1-2 accumulator valve spring, 1-2 accumulator valve and 1-2 accumulator valve plug into valve body; secure with retaining pin (Figure 56).
8. New transfer plate gaskets and transfer plate onto valve body using the J 3387-2 to align the transfer plate and gaskets; secure with two bolts (Figure 57).

   Tighten

   - Transfer plate-to-valve body bolts to 9 N·m (80 lb.in.).

9. Manual valve and manual valve link into valve body.

VALVE BODY INSTALLATION

Figures 27, 28, 36 and 37

Install or Connect

Tools Required:
J 3387-2 Converter Housing Guide Pin
J 36850 Transjel® Transmission Assembly Lubricant

NOTICE: Make sure to install the check ball in the transmission case passage when installing valve body (Figure 35). Use a small amount of J 36850 to retain the check ball in place during valve body installation. Failure to install check ball in its correct position may result in transmission shift failure.

1. Check ball, transfer plate gaskets, transfer plate, valve body and manual detent roller onto transmission case aligning valve body with transmission case using the J 3387-2; secure with nine bolts (Figure 36).

   Tighten

   - Valve body bolts to 19 N·m (14 lb.ft.).

2. New servo piston cover gasket and servo piston cover onto transmission case; secure with four bolts (Figure 37).

   Tighten

   - Servo piston cover bolts to 25 N·m (18 lb.ft.).

3. Reinforcement plate onto transmission case; secure with six bolts (Figure 28).

   Tighten

   - Reinforcement plate bolts to 19 N·m (14 lb.ft.).

4. Fluid pressure switch into valve body by turning clockwise (Figure 27).

   Tighten

   - Fluid pressure switch to 10 N·m (89 lb.in.).

5. TCC solenoid onto reinforcement plate; secure with two bolts.

   Tighten

   - TCC solenoid retaining bolts to 19 N·m (14 lb.ft.).

6. Electrical connectors to fluid pressure switch (Figure 27).
7. Electrical connector to TCC solenoid (Figure 27).

   Inspect

   - TCC solenoid pipe O-rings for cuts or other damage. Replace as necessary.

- Apply a thin coat of J 36850 to the TCC solenoid pipe O-rings.

8. Two TCC solenoid pipes into TCC solenoid, fluid pump and valve body (Figure 27).
9. New fluid filter screen gasket and fluid filter screen onto valve body; secure with three bolts.

   Tighten

   - Fluid filter screen bolts to 19 N·m (14 lb.ft.).

10. New transmission fluid pan gasket and transmission fluid pan onto transmission. Refer to "Changing Fluid and Cleaning Filter Screen" earlier in this section.

- Remove drain pan from under transmission fluid pan.
- Lower vehicle.

11. Negative (-) battery cable.

Tighten

- Negative (-) battery cable-to-negative (-) battery terminal retainer to 15 N·m (11 lb.ft.).

- Refill transmission as necessary:
  A. Place vehicle on a level surface.
  B. Remove fluid level indicator.
  C. Add approximately 1.5 (1.6 qts.) liters of Dexron® II automatic transmission fluid GM P/N 1051855, or equivalent, into fluid filler tube.
  D. Install fluid level indicator into fluid filler tube.
  E. Apply parking brake and block vehicle wheels.
  F. With selector lever in "P" position, start engine. DO NOT race engine.
  G. Run engine at idle and move selector lever through each range and return to the "P" position.
  H. With engine running at idle, remove fluid level indicator from filler tube and wipe indicator off.
  I. Reinsert fluid level indicator into filler tube making sure it is seated in its original position.
  J. Remove the indicator and check the fluid level. The level should be between the "FULL HOT" and "LOW HOT" marks. If the level is below the "LOW HOT" mark, add fluid to bring the level to the "FULL HOT" mark. Bringing the fluid level from the "LOW HOT" mark to the "FULL HOT" mark requires 0.3 liters (0.3 qts.) of fluid. Use Dexron® II automatic transmission fluid GM P/N 1051855, or equivalent.

TORQUE CONVERTER CLUTCH (TCC) SOLENOID AND FLUID PRESSURE SWITCH

Figure 27

Remove or Disconnect

1. Negative (-) battery cable.
- Raise and suitably support vehicle. Refer to SECTION 0A.
2. Transmission fluid pan and gasket from transmission. Refer to "Changing Fluid and Cleaning Filter Screen" earlier in this section.
3. Two TCC solenoid pipes from TCC solenoid, fluid pump and valve body (Figure 27).
4. Electrical connector from TCC solenoid (Figure 27).
5. Electrical connectors from fluid pressure switch (Figure 27).
6. Two bolts and TCC solenoid from reinforcement plate.
7. Fluid pressure switch from valve body by turning counterclockwise (Figure 27).

Inspect

1. TCC solenoid pipe O-rings for cuts or other damage. Replace as necessary.
2. For TCC solenoid and fluid pressure switch inspection and diagnosis procedures, refer to SECTION 7A-11A and SECTION 6E2. For a complete schematic of the TCC system, refer to SECTION 8A.

Install or Connect

1. Fluid pressure switch into valve body by turning clockwise (Figure 27).

Tighten

- Fluid pressure switch to 10 N·m (89 lb.in.).

2. TCC solenoid onto reinforcement plate; secure with two bolts.

Tighten

- TCC solenoid retaining bolts to 19 N·m (14 lb.ft.).

3. Electrical connectors to fluid pressure switch (Figure 27).
4. Electrical connector to TCC solenoid (Figure 27).
- Apply a thin coat of J 36850 to the TCC solenoid pipe O-rings.
5. Two TCC solenoid pipes into TCC solenoid, fluid pump and valve body (Figure 27).
6. New transmission fluid pan gasket and transmission fluid pan onto transmission. Refer to "Changing Fluid and Cleaning Filter Screen" earlier in this section.
- Lower vehicle.
7. Negative (-) battery cable.

Tighten

- Negative (-) battery cable-to-negative (-) battery terminal retainer to 15 N·m (11 lb.ft.).

- Refill transmission as necessary:
  A. Place vehicle on a level surface.
  B. Remove fluid level indicator.
  C. Add approximately 1.5 liters (1.6 qts.) of Dexron® II automatic transmission fluid GM P/N 1051855, or equivalent, into fluid filler tube.
  D. Install fluid level indicator into fluid filler tube.
  E. Apply parking brake and block vehicle wheels.
  F. With selector lever in "P" position, start engine. DO NOT race engine.
  G. Run engine at idle and move selector lever through each range and return to the "P" position.
  H. With engine running at idle, remove fluid level indicator from filler tube and wipe indicator off.
  I. Reinsert fluid level indicator into filler tube making sure it is seated in its original position.
  J. Remove the indicator and check the fluid level. The level should be between the "FULL HOT" and "LOW HOT" marks. If the level is below the "LOW HOT" mark, add fluid to bring the level to the "FULL HOT" mark. Bringing the fluid level from the "LOW HOT" mark to the "FULL HOT" mark requires 0.3 liters (0.3 qts.) of fluid. Use Dexron® II automatic transmission fluid GM P/N 1051855, or equivalent.

TRANSMISSION COOLER PIPES AND HOSES

Figures 59 and 60

Remove or Disconnect

- Raise and suitably support vehicle. Refer to SECTION 0A.

1. Four bolts and front skid plate (if equipped).

- Place a drain pan or suitable container under transmission cooler hoses.

2. Two screws and cooler hoses from cooler hose retainer clamps.
3. Two inlet and outlet hose clamps and transmission cooler hoses from transmission cooler (Figure 59).

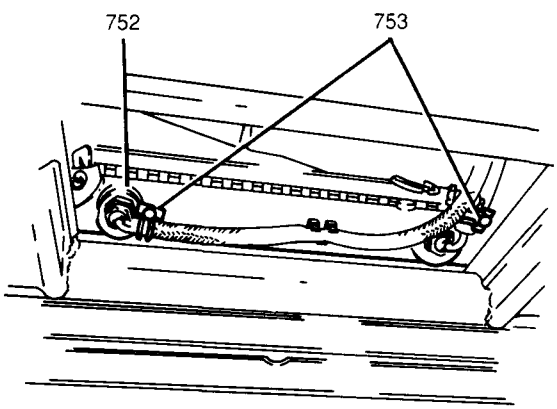

752 TRANSMISSION COOLER
753 FLUID COOLER HOSE CLAMPS

NC7159-7A-JT-RS

Figure 59 Cooler Hoses at Transmission Cooler

4. Two inlet and outlet hose clamps and transmission cooler hoses from inlet and outlet cooler pipes at transmission (Figure 24).

- Place a drain pan or suitable container under transmission cooler pipes.

5. One bolt and cooler pipe clamp from transmission (Figure 60).

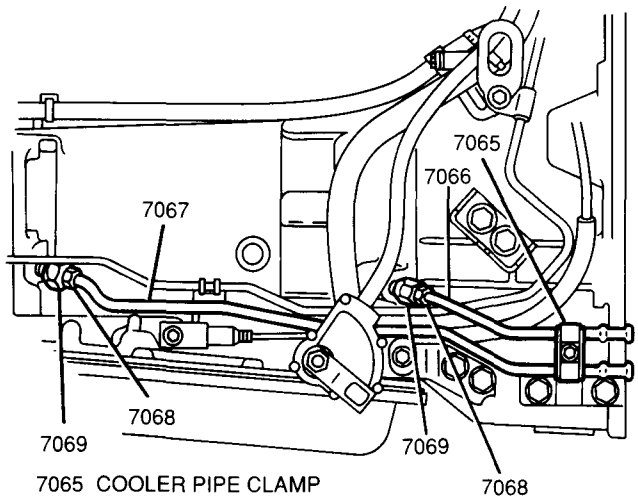

7065 COOLER PIPE CLAMP
7066 OUTLET COOLER PIPE
7067 INLET COOLER PIPE
7068 COOLER PIPE FLARE NUT
7069 COOLER PIPE FITTING

NC7160-7A-JT-RS

Figure 60 Transmission Cooler Pipes

6. Inlet and outlet transmission cooler pipes from transmission by loosening both flare nuts at cooler pipe fittings (Figure 60).

- Remove drain pan from under vehicle.

Inspect

1. Transmission cooler pipes for kinks or other damage. Replace as necessary.
2. Transmission cooler hoses for leaks or damage. Replace as necessary.
3. Transmission cooler pipe flare nuts for damage. Replace as necessary.

Install or Connect

1. Inlet and outlet transmission cooler pipes to transmission by threading both flare nuts into cooler pipe fittings (Figure 60).

Tighten

- Cooler pipe flare nuts to 25 N·m (18 lb.ft.).

2. Cooler pipe clamp from transmission cooler pipe bracket; secure with one bolt (Figure 60).

Tighten

- Cooler pipe clamp bolt to 23 N·m (17 lb.ft.).

3. Transmission cooler hoses to inlet and outlet cooler pipes at transmission; secure with two inlet and outlet hose clamps.
4. Transmission cooler hoses to transmission cooler; secure with two inlet and outlet hose clamps (Figure 59).
5. Transmission cooler hoses to cooler hose retainer clamps; secure with two screws.
6. Front skid plate to vehicle; secure with four bolts (if equipped).

Tighten

- Front skid plate bolts to 54 N·m (40 lb.ft.).

- Lower vehicle.

TRANSMISSION ASSEMBLY

Figures 61, 62 and 63

Remove or Disconnect

1. Negative (-) battery cable.
2. Fluid level indicator from fluid filler tube.
3. Vacuum modulator hose at intake manifold.
4. PNP switch electrical connectors under intake manifold.
5. Starter motor electrical connections from starter motor.
6. Two bolts and starter motor from transmission.
7. Two upper transmission retaining bolts from transmission.
8. Four bolts from fan shroud at radiator.
9. Two screws, two plastic retaining clips and console box from floor (four-wheel drive models).
10. One screw and transfer case shift lever knob.
11. Six screws and transfer case shift lever boot, plate, bracket and case cover boot (four-wheel drive models).

- Raise and suitably support vehicle. Refer to SECTION 0A.

12. Transmission fluid pan and gasket and drain transmission fluid. Refer to "Changing Fluid and Cleaning Filter Screen" earlier in this section.

- Install transmission fluid pan and new gasket onto transmission to support transmission assembly on hydraulic jack; secure with twelve bolts.

Tighten

- Transmission fluid pan bolts to 13 N·m (115 lb.in.).

13. Rear and front (if equipped) propeller shafts. Refer to SECTION 4A.

- Support transmission with a suitable hydraulic jack.

14. Transfer case from vehicle (four-wheel drive models). Refer to SECTION 7D.
15. Two bolts from rear transmission mount (two-wheel drive models) (Figure 61).

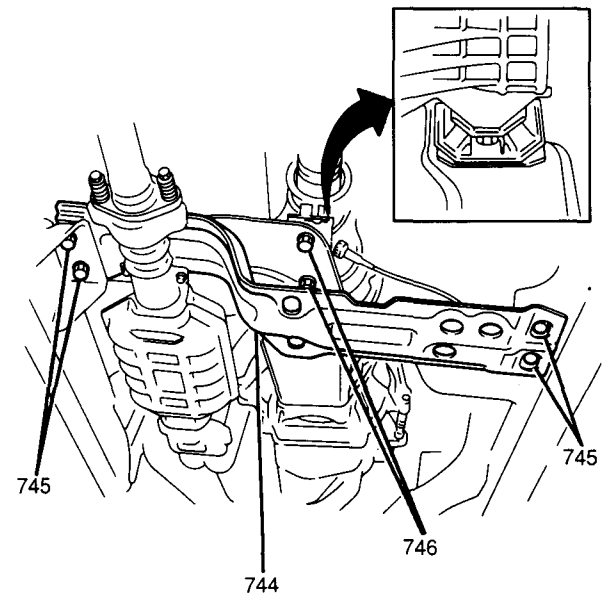

744 REAR TRANSMISSION CROSSMEMBER
745 REAR TRANSMISSION CROSSMEMBER BOLTS
746 REAR TRANSMISSION MOUNT BOLTS
NC0724-7A-JT-RS

Figure 61 Rear Transmission Crossmember and Mount Bolts

16. Four bolts and rear transmission crossmember from vehicle (two-wheel drive models) (Figure 61).
17. Shift select cable from transmission. Refer to "Shift Select Cable" earlier in this section.
18. One bolt and fluid filler tube from transmission.
19. Speedometer cable from speedometer driven gear case. Refer to "Speedometer Driven Gear" earlier in this section.
20. TV cable from transmission. Refer to "TV Cable" earlier in this section.
21. Two clamps and fluid cooler hoses from fluid cooler pipes at transmission (Figure 24).
22. Four bolts and front skid plate from vehicle (if equipped).
23. Two bolts and flywheel inspection cover from converter housing.
24. Three flywheel-to-torque converter bolts.

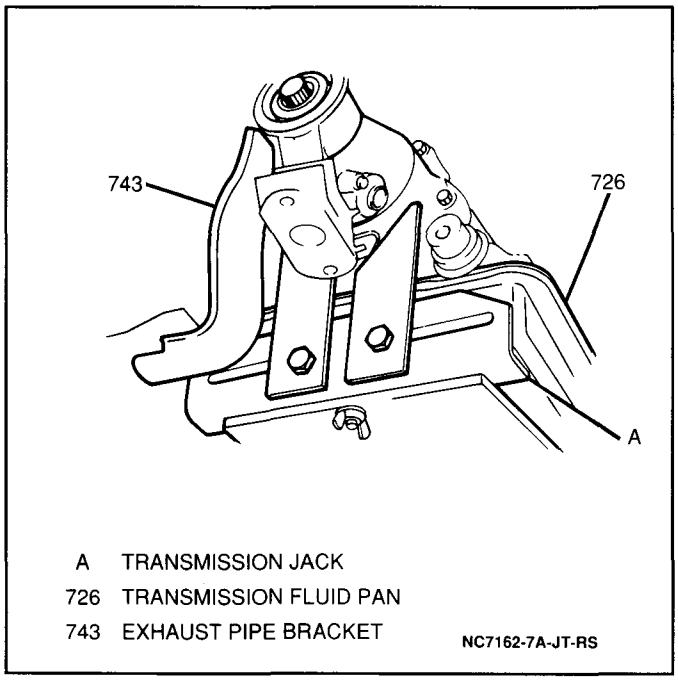

Figure 62 Exhaust Pipe Bracket

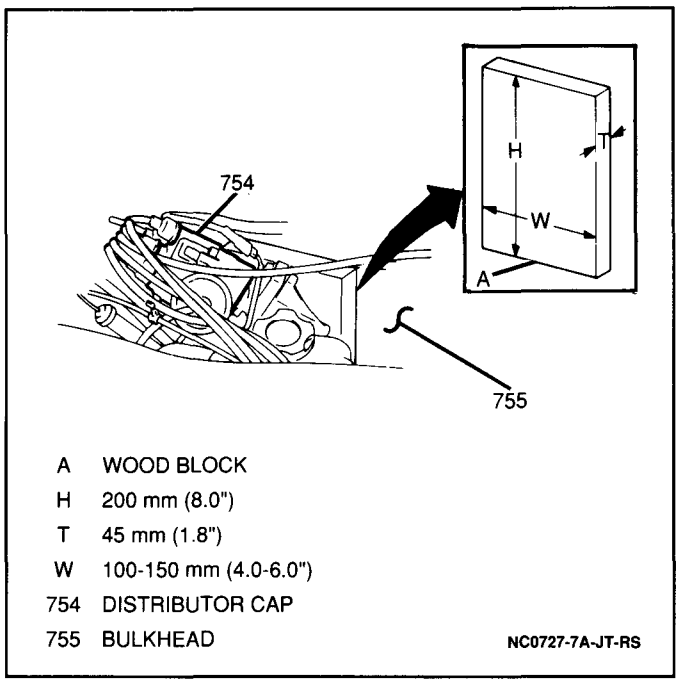

Figure 63 Wood Block Support Installation

25. Two bolts, two nuts and exhaust pipe bracket from extension housing (two-wheel drive models) (Figure 62).
- Place a wood block with the dimensions shown in Figure 63 between the distributor gear housing and the bulkhead to prevent the distributor and other components from being damaged when the transmission is lowered.
- Lower transmission slowly until engine contacts its support point on the wood block.

26. Vent hose from vent tube at top of transmission.
27. Two lower transmission retaining nuts.
- Slowly lower transmission making sure no obstructions exist and remove transmission from vehicle.

Inspect

- For inspection and overhaul procedures, refer to SECTION 7A-11B.

Install or Connect

- Slowly raise transmission into vehicle making sure no obstructions exist.

1. Two lower transmission retaining nuts.

Tighten

- Lower transmission retaining nuts to 85 N·m (62 lb.ft.).

2. Vent hose to vent tube at top of transmission.
- Raise transmission slowly until engine is no longer in contact with the wood block between the bulkhead and the distributor gear housing.
- Remove wood block.

3. Exhaust pipe bracket to extension housing and three way catalytic converter (TWC); secure with two bolts and two nuts (Figure 62).

Tighten

- Exhaust pipe bracket nuts and bolts to 23 N·m (17 lb.ft.).

4. Three flywheel-to-torque converter bolts.

Tighten

- Flywheel-to-torque converter bolts to 55 N·m (40 lb.ft.).

5. Flywheel inspection cover to converter housing; secure with two bolts.

Tighten

- Flywheel inspection cover bolts to 10 N·m (89 lb.in.).

6. Front skid plate to vehicle (if equipped); secure with four bolts.

Tighten

- Front skid plate bolts to 54 N·m (40 lb.ft.).

7. Fluid cooler hoses to fluid cooler pipes at transmission; secure with two clamps (Figure 24).

Tighten

- Fluid cooler inlet and outlet hose clamps.

8. TV cable to transmission. Refer to "TV Cable" earlier in this section.
9. Speedometer cable to speedometer driven gear case. Refer to "Speedometer Driven Gear" earlier in this section.
10. Fluid filler tube into transmission; secure with one bolt.

Tighten

- Fluid filler tube bracket bolt to 23 N·m (17 lb.ft.).

11. Shift select cable to transmission. Refer to "Shift Select Cable" earlier in this section.
12. Rear transmission crossmember to undercarriage (two-wheel drive models); secure with four bolts (Figure 61).

Tighten

- Rear transmission crossmember bolts to 60 N·m (45 lb.ft.).

13. Two bolts to rear transmission mount (two-wheel drive models) (Figure 61).

Tighten

- Rear transmission mount bolts to 60 N·m (43 lb.ft.).

14. Transfer case into vehicle (four-wheel drive models). Refer to SECTION 7D.
15. Rear and front (if equipped) propeller shafts into vehicle. Refer to SECTION 4A.

- Remove hydraulic jack from under transmission.
- Lower vehicle.

16. Case cover boot, bracket, plate, and shift lever boot to transfer case shift lever (four-wheel drive models); secure with six screws.
17. Transfer case shift lever knob to transfer case shift lever; secure with one screw.
18. Console box to floor (four-wheel drive models); secure with two plastic retaining clips and two screws.
19. Four bolts to fan shroud at radiator.

Tighten

- Fan shroud bolts to 10 N·m (89 lb.in.).

20. Two upper transmission retaining bolts from transmission.

Tighten

- Upper transmission retaining bolts to 85 N·m (62 lb.ft.).

21. Starter motor to transmission converter housing; secure with two bolts.

Tighten

- Starter motor bolts to 30 N·m (22 lb.ft.).

22. Starter motor electrical connections to starter motor.
23. PNP switch electrical connectors under intake manifold.
24. Vacuum modulator hose to intake manifold.
25. Fluid level indicator into fluid filler tube.
26. Negative (-) battery cable.

Tighten

- Negative (-) battery cable-to-negative (-) battery terminal retainer to 15 N·m (11 lb.ft.).

- Refill transmission as necessary:
  A. Place vehicle on a level surface.
  B. Remove fluid level indicator.
  C. Add approximately 1.5 liters (1.6 qts.) of Dexron® II automatic transmission fluid GM P/N 1051855, or equivalent, into fluid filler tube.
  D. Install fluid level indicator into fluid filler tube.
  E. Apply parking brake and block vehicle wheels.
  F. With selector lever in "P" position, start engine. DO NOT race engine.
  G. Run engine at idle and move selector lever through each range and return to the "P" position.
  H. With engine running at idle, remove fluid level indicator from filler tube and wipe indicator off.
  I. Reinsert fluid level indicator into filler tube making sure it is seated in its original position.
  J. Remove the indicator and check the fluid level. The level should be between the "FULL HOT" and "LOW HOT" marks. If the level is below the "LOW HOT" mark, add fluid to bring the level to the "FULL HOT" mark. Bringing the fluid level from the "LOW HOT" mark to the "FULL HOT" mark requires 0.3 liters (0.3 qts.) of fluid. Use Dexron® II automatic transmission fluid GM P/N 1051855, or equivalent.

SPECIFICATIONS

FASTENER TORQUES

Flywheel-to-Torque Converter Bolts	55 N·m (40 lb.ft.)
Flywheel Inspection Cover Bolts	10 N·m (89 lb.in.)
Manual Selector Bolts	18 N·m (13 lb.ft.)
Shift Select Cable Locknut	7 N·m (62 lb.in.)
Park/Neutral Position Switch Bolt	21 N·m (15 lb.ft.)
Manual Select Lever Nut	19 Nm (14 lb.ft.)
Interlock Cable Adjustment Nuts	7 N·m (62 lb.in.)
Shift Lock Solenoid Retaining Bolt	10 N·m (89 lb.in.)
Stoplamp Switch Adjustment Nut	15 N·m (11 lb.ft.)
TV Cable Retaining Bracket Bolt	10 N·m (89 lb.in.)
Fluid Filter Screen Bolts	19 N·m (14 lb.ft.)
Transmission Fluid Pan Bolts	13 N·m (115 lb.in.)
Front Propeller Shaft Bolts and Nuts	50 N·m (37 lb.ft.)
Rear Propeller Shaft Bolts and Nuts	50 N·m (37 lb.ft.)
Vacuum Modulator	52 N·m (38 lb.ft.)
Valve Body Bolts	19 N·m (14 lb.ft.)
Servo Piston Cover Bolts	25 N·m (18 lb.ft.)
Reinforcement Plate Bolts	19 N·m (14 lb.ft.)
TCC Solenoid Retaining Bolts	19 N·m (14 lb.ft.)
Speedometer Guide Bracket Bolt	9 N·m (80 lb.in.)
Rear Propeller Shaft Bolts and Nuts	50 N·m (37 lb.ft.)
Extension Housing Bolts	31 N·m (23 lb.ft.)
Rear Transmission Crossmember Bolts	60 N·m (45 lb.ft.)
Rear Transmission Mount Bolts	60 N·m (45 lb.ft.)
Exhaust Pipe Bracket Bolts and Nuts	23 N·m (17 lb.ft.)
Transfer Adapter Case Bolts	31 N·m (23 lb.ft.)
Governor Assembly Bolts	9 N·m (80 lb.in.)
Fluid Filler Tube Bracket Bolt	23 N·m (17 lb.ft.)
Transfer Plate-to-Valve Body Bolts	9 N·m (80 lb.in.)
Fluid Pressure Switch	10 N·m (89 lb.in.)
Cooler Pipe Flare Nuts	25 N·m (18 lb.ft.)
Cooler Pipe Clamp Bolt	23 N·m (17 lb.ft.)
Front Skid Plate Bolts	54 N·m (40 lb.ft.)
Lower Transmission Retaining Nuts	85 N·m (62 lb.ft.)
Fan Shroud Bolts	10 N·m (89 lb.in.)
Upper Transmission Retaining Bolts	85 N·m (62 lb.ft.)
Starter Motor Bolts	30 N·m (22 lb.ft.)
Negative (-) Battery Cable-to-Negative (-) Battery Cable Terminal Retainer	15 N·m (11 lb.ft.)

FLUID CAPACITIES (approximate)

Pan Removal	1.5 liters (1.6 qts.)
Overhaul Less Torque Converter	3.5 liters (3.7 qts.)
Overhaul With New Torque Converter	4.9 liters (5.1 qts.)
Fluid Recommended	Dexron® II Automatic Transmission Fluid GM P/N 1051855, or equivalent

SERVICE PARTS INFORMATION

Component Name Used in Section 7A	Reference Name in Service Parts Catalog	Group Number
Converter Housing	Housing ASM, Trans Torque Converter	4.115
Torque Converter	Converter, Transmission Torque	4.115
Flywheel	Flywheel, Torque Converter	0.666
Transmission Case	Case ASM, Trans	4.103
Extension Housing	Housing ASM, Extension	4.103
Extension Housing Seal	Ring, Trans Extension Housing Seal	4.318
Extension Housing Bolts	Bolt, Extension Housing Attaching	4.319
Parking Lock Pawl	Pawl, Trans Parking Lock	4.294
Parking Lock Pawl Return Spring,	Spring, Trans Parking Lock Pawl Return	4.295
Parking Lock Pawl Shaft	Shaft, Parking Lock Pawl	4.294
Exhaust Pipe Bracket	Bracket, Engine Exhaust Center Pipe Hanger	3.690
Rear Transmission Crossmember	Member, Engine Rear Mounting	0.029
Rear Transmission Crossmember Bolts	Bolt, Engine Rear Mounting To Member.	0.004
Rear Transmission Mount Bolts	Bolt, Engine Rear Mounting	0.004
Fluid Level Indicator	Gage ASM, Trans Oil W/Auto Trans	4.133
Fluid Filler Tube	Tube, Trans Oil Filler W/Auto Trans	4.133
Speedometer Drive Gear	Gear, Speedo Drive W/Auto Trans	4.343
Speedometer Drive Gear Retaining Ring	Circlip, Speedo Drive Gear	4.338
Speedometer Cable	Cable ASM, Speedometer	4.342
Speedometer Driven Gear Case	Case, Speedo Driven Gear	4.329
Speedometer Driven Gear	Gear, Speedo Driven	4.337
Throttle Valve	Valve, Trans Kick Down	4.265
TV Cable	Cable ASM, Engine Throttle Body Kick Down	3.430
TV Cable Adjust Nut	Cable ASM, Engine Throttle Body Kick Down	3.430
TV Cable Locknut	Cable ASM, Engine Throttle Body Kick Down	3.430
Manual Selector	Selector ASM, Gear Shift	4.004
Selector Lever Housing	Housing, Select Lever	4.010
Selector Lever	Lever, Selector ASM	4.006
Shift Lock Solenoid	Solenoid, Shift Lock	4.011
Shift Select Cable	Cable ASM, Gear Shift Selector	4.047
Cable End Clip	Clip, Gear Shift Selector Cable End	4.047
Cable Bracket	Bracket, Gear Shift Selector Cable	4.047
Manual Selector Lever	Lever, Transmission Cable End	4.218
E-Clip	Clip, Gear Shift Selector Cable Retainer	4.047
PNP Switch.	Switch ASM, Trans Shift	4.054
PNP Switch Bolt	Bolt, Gear Shift Control Bracket	4.054
Interlock Cable	Cable, Park Lock Kit W/Auto Trans	4.011
Interlock Cable Adjust Nut	Cable, Park Lock Kit W/Auto Trans	4.011
Stoplamp Switch	Switch ASM, Brake Pedal Stop Lamp	2.447
Stoplamp Switch Adjust Nut	Nut, Brake Pedal Stop Lamp Switch	2.447
Transmission Fluid Pan	Pan, Transmission Oil	4.195
Transmission Fluid Pan Bolt	Bolt, Transmission Oil Pan	4.196
Fluid Filter Screen	Screen ASM, Transmission Oil Pump	4.197
Transmission Fluid Pan Magnet	Magnet, Transmission Oil Pan	4.196
Vacuum Modulator	Modulator ASM, Trans	4.205
Vacuum Pipe	Pipe, Vacuum Modulator W/Auto Trans..	4.128
Vacuum Modulator Plunger	Plunger, Trans Modulator Valve	4.205
Vacuum Modulator O-Ring	O-Ring, Trans Modulator Valve	4.205
TCC Solenoid Pipes	Tube, Trans Solenoid Valve	4.122
Fluid Pressure Switch	Switch ASM, Trans Oil Pressure	4.265
TCC Solenoid	Solenoid ASM, Trans Valve Body	4.122
TCC Solenoid Electrical Connector	Harness, Trans Solenoid Wiring	4.265
Fluid Pressure Switch Electrical Connectors	Harness, Trans Solenoid Wiring	4.265
Reinforcement Plate	Reinforcement, Transmission Transfer Plate	4.197
Servo Piston Cover	Cover, Transmission Servo Piston	4.241
Servo Piston Retaining Ring.	Ring, Transmission Servo Piston Retainer	4.242
Servo Piston Rod	Rod, Transmission Servo Piston	4.241
Servo Piston Cushion Spring	Piston ASM, Transmission Servo	4.228
Servo Piston	Piston ASM, Transmission Servo	4.228
Servo Piston Return Spring.	Spring, Transmission Servo Piston Return	4.246

Servo Piston Adjusting Sleeve.	Piston ASM, Transmission Servo	4.228
Servo Piston Cushion Spring Retainer	Clip, Transmission Servo Piston	4.246
Servo Piston Cushion Spring Seat	Piston ASM, Transmission Servo	4.228
Servo Piston Seal Ring	Piston ASM, Transmission Servo	4.228
Servo Piston Adjusting Screw	Bolt, Transmission Servo Piston Adjustment Stud	4.241
Servo Piston Locknut	Nut, Transmission Servo Piston Adjustment Bolt	4.241
Servo Piston Cover Gasket	Gasket, Transmission Servo Piston Cover	4.241
Transfer Adapter Case Seal	Ring, Transfer Adapter Case Seal	4.318
Transfer Adapter Case Bolts	Bolt, Transfer Adapter Case Attaching	4.319
Governor Assembly	Governor ASM, Trans Complete	4.256
Governor Assembly Bolt	Bolt, Trans Governor Body	4.256
Governor Hub	Governor ASM, Trans Complete	4.256
Governor Ring	Ring, Trans Governor Retainer	4.256
Governor Fluid Screen	Screen ASM, Trans Governor Oil	4.256
Governor Hub Seal Rings	Governor ASM, Trans Complete	4.256
Secondary Valve Retainer	Bolt, Trans Valve Spring Retainer	4.256
Secondary Spring	Spring, Trans Governor 2nd Valve	4.256
Secondary Valve	Governor ASM, Trans Complete	4.256
Governor Body	Governor ASM, Trans Complete	4.256
Primary Valve	Governor ASM, Trans Complete	4.256
Check Ball	Ball, Transmission Valve Body	4.265
Valve Body Bolts	Bolt, Transmission Valve Body	4.265
Valve Body	Valve ASM, Trans	4.265
Manual Valve	Valve, Transmission Manual	4.265
Manual Valve Link	Link, Transmission Manual Valve	4.275
1-2 Accumulator Piston Assembly	Valve ASM, Trans	4.265
Retaining Pin	Pin, Transmission Valve Retaining Spring	4.265
1-2 Accumulator Valve Plug	Plug, Transmission 1st to 2nd Accumulator Valve	4.265
1-2 Accumulator Valve	Valve, Transmission 1st to 2nd Accumulator	4.265
1-2 Accumulator Valve Spring	Spring, Transmission 1st to 2nd Accumulator Valve	4.265
High Speed Downshift Timing Valve Spring	Spring, Transmission High Speed Down Shift Valve	4.265
High Speed Downshift Timing Valve	Valve, Transmission High Speed Down Shift	4.265
Timing and Control Valve Plug	Plug, Transmission Timing and Control Valve	4.265
Low Speed Downshift Timing Valve	Valve, Transmission Low Speed Down Shift Timing	4.265
Low Speed Downshift Timing Valve Spring	Spring, Transmission Low Speed Down Shift Timing Valve	4.265
Manual Low Control Valve Spring	Spring, Transmission Manual Low Control Valve	4.265
Manual Low Control Valve	Valve, Transmission Manual Low Control	4.265
Reverse Control Valve	Valve, Transmission Reverse Control..	4.265
1-2 Shift Valve Shift	Valve, Transmission 1st to 2nd Shift	4.265
1-2 Shift Control Valve Secondary Spring	Spring, Transmission 1st to 2nd Shift Valve	4.265
1-2 Shift Control Valve	Valve, Transmission 1st to 2nd Shift Control	4.265
1-2 Shift Control Valve Sleeve	Sleeve, Transmission 1st to 2nd Shift Control Valve	4.265
2-3 Shift Valve	Valve, Transmission 2nd to 3rd Shift.	4.265
2-3 Shift Control Valve Spring Seat	Seat, Transmission 2nd to 3rd Shift Control Valve Spring	4.265
2-3 Shift Control Valve Spring	Spring, Transmission 2nd to 3rd Shift Control Valve	4.265
2-3 Shift Control Valve	Valve, Transmission 2nd to 3rd Shift Control	4.265
2-3 Shift Control Valve Sleeve	Sleeve, Transmission 2nd to 3rd Shift Control Valve	4.265
3-2 Control Valve	Valve, Transmission 3rd to 2nd Control	4.265
3-2 Control Valve Spring	Spring, Transmission 3rd to 2nd Control Valve	4.265
3-2 Control Valve Plug	Plug, Transmission 3rd to 2nd Control Valve	4.265
Detent Pressure Regulator Valve	Valve, Transmission Detent Pressure Regulator	4.265
Detent Pressure Regulator Valve Spring	Spring, Transmission Detent Pressure Regulator Valve	4.265
1-2 Shift Control Valve Primary Spring	Spring, Transmission 1st to 2nd Shift Control Valve	4.265
Transfer Plate Gasket	Gasket, Transmission Transfer Plate	4.265
Transfer Plate	Plate, Transmission Transfer	4.265
Cooler Pipe Clamp	Clamp, Trans Oil Pipe	4.128
Outlet Cooler Pipe	Pipe, Trans Oil Outlet	4.128
Inlet Cooler Pipe	Pipe, Trans Oil Inlet	4.128
Cooler Pipe Fitting	Connector, Trans Oil Link	4.128

SPECIAL TOOLS

1
J 36850

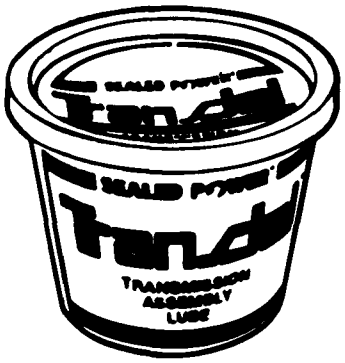

5
J 23062-14

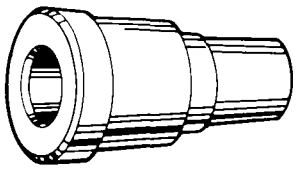

6
J 21426

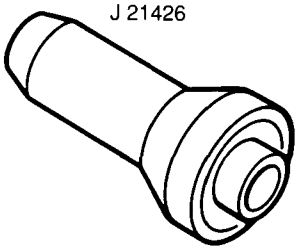

2
J 23129

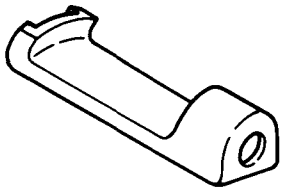

3
J 8092

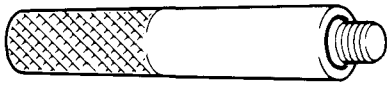

7
J 23100

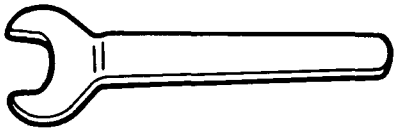

4
J 6125-B

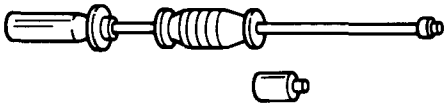

8
J 35538

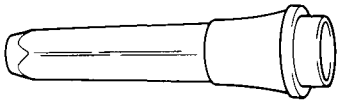

9
J 23738-A

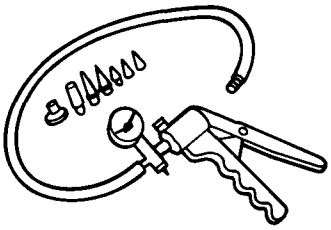

1 TRANSJEL® TRANSMISSION ASSEMBLY LUBRICANT
2 CONVERTER HOUSING SEAL AND EXTENSION HOUSING OIL SEAL REMOVER
3 DRIVER HANDLE
4 SLIDE HAMMER
5 EXTENSION HOUSING BUSHING REMOVER AND INSTALLER
6 EXTENSION HOUSING SEAL INSTALLER
7 VACUUM MODULATOR WRENCH
8 AXLE SHAFT SEAL INSTALLER
9 HAND OPERATED VACUUM PUMP

NC7164-7A-JT-RS

10
J 28428-D

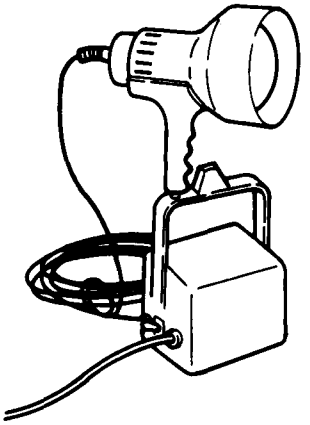

11
J 28431-6

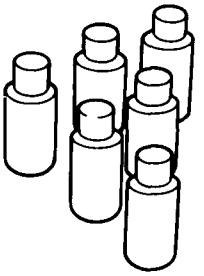

12
J 38549

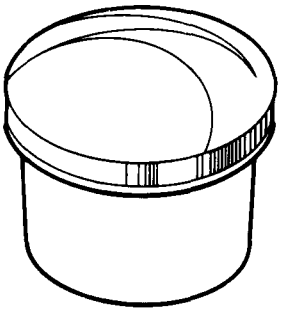

13
J 39200

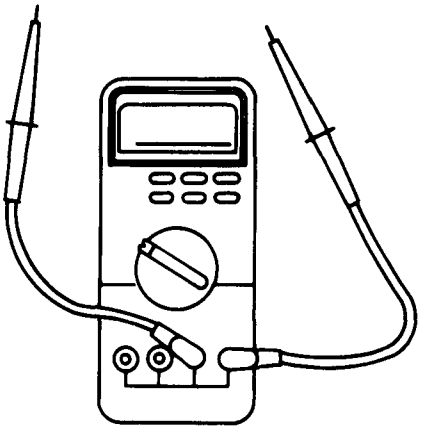

14
J 23075

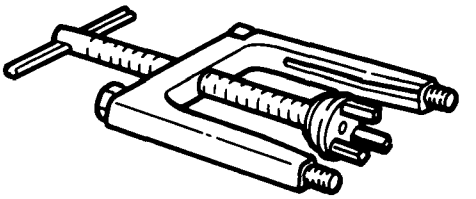

15
J 38428

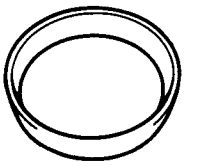

16
J 3387-2

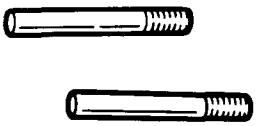

10 HIGH INTENSITY BLACK LIGHT
11 FLUORESCENT OIL ADDITIVE
12 TRANSMISSION VALVE LAPPING COMPOUND
13 DIGITAL MULTIMETER
14 SERVO AND THIRD CLUTCH PISTON COMPRESSOR
15 SERVO PISTON RING INSTALLER
16 CONVERTER HOUSING GUIDE PIN

PC7165-7A-JT-RS

SECTION 7A-11A
HYDRA-MATIC 3L30
AUTOMATIC TRANSMISSION DIAGNOSIS
RPO MD2

CONTENTS

General Description 7A-11A-1
Diagnosis Information 7A-11A-1
Road Test Procedure 7A-11A-1
Transmission Pressure Check Procedure 7A-11A-3
Oil Pressure Tap Locations 7A-11A-3
Oil Pressure Check Procedure 7A-11A-3
Clutch Application Chart 7A-11A-4
Torque Converter Clutch (TCC) Diagnosis 7A-11A-4
Torque Converter Evaluation 7A-11A-5
Diagnosis Charts 7A-11A-6
Oil Circuit Charts 7A-11A-12

GENERAL DESCRIPTION

The HYDRA-MATIC 3L30 is a fully automatic transmission for rear wheel drive vehicles which provides three forward gear ranges and a reverse. SEE FIGURE 1.

The major components of this transmission are:

- Torque Converter Clutch Asm.
- Gear Type Oil Pump
- Low Band Asm.
- Three Multiple Disc Clutches
- Planetary Gear Set
- One Sprag Clutch
- Valve Body Asm.

The oil pressure and shift points are controlled by a vacuum modulator that senses engine torque as a relation to engine vacuum.

The transmission can be operated in any one of six different modes.

P — Park position prevents the vehicle from rolling either forward or backward. (For safety reasons the parking brake should be used in addition to the park position).

R — Reverse allows the vehicle to be operated in a rearward direction.

N — Neutral allows the engine to be started and operated without driving the vehicle. If necessary this position may be selected if the engine must be restarted with the vehicle moving.

D — Drive is used for all normal driving conditions. It provides three gear ratios plus converter clutch operation. Downshifts are available for safe passing by depressing the accelerator.

2 — Manual second is used to provide acceleration and engine braking. This range may be selected at any vehicle speed.

1 — Manual Lo is used to provide maximum engine braking. This range may also be selected at any vehicle speed.

DIAGNOSIS INFORMATION

ROAD TEST PROCEDURE

- Perform the road test following the sequence given
- Mph (km/h) shift points will vary with actual throttle position and driver habits
- Compare the results of the test with speed shift chart information. Use these results with the diagnosis information in this Hydraulic Diagnosis Section to evaluate the transmission.
- **This test should only be performed when traffic and road conditions permit**
- **Observe all traffic safety regulations**

Drive And Reverse Engagement

1. Start engine
2. Depress brake pedal
3. Move gear selector:
   - "Park" (P) to "Reverse" (R)
   - "Reverse" (R) to "Neutral" (N) to "Drive" (D)

   Gear selections should be immediate and not harsh.

Upshifts and Torque Converter Clutch (TCC) Apply

With gear selector in "Drive" (D)

1. Accelerate using a steady increasing throttle pressure
2. Note gear engagements for:
   - 2nd gear
   - 3rd gear

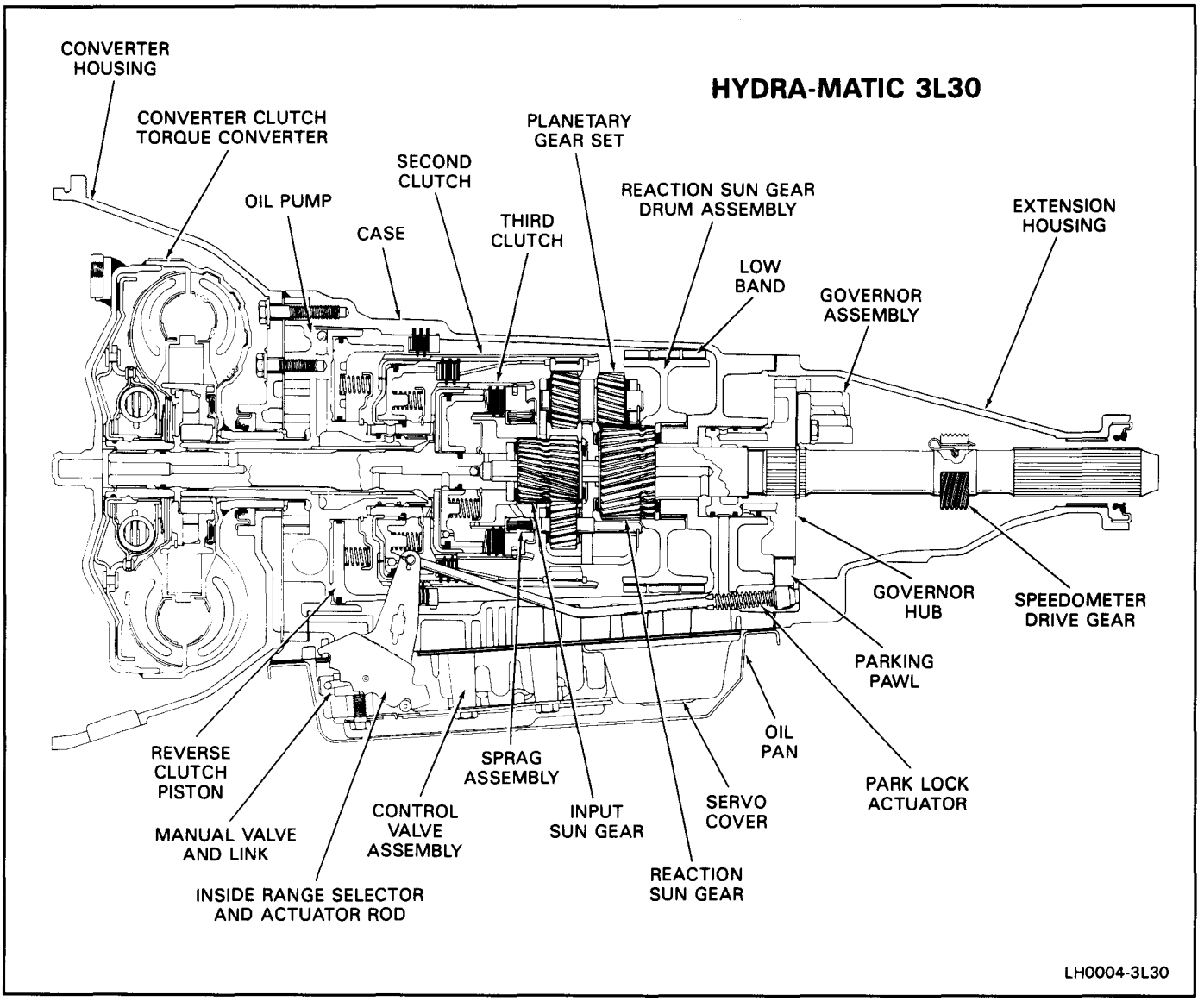

Figure 1 HYDRA-MATIC 3L30 Transmission

3. Note TCC apply. This should occur while in third gear. If the apply is not noticed, refer to the Preliminary Torque Converter Clutch Diagnosis information contained in this section of the Service Manual.

Important

- The torque converter clutch will not engage if engine coolant has not reached a minimum operating temperature of approximately 54°C (130°F).

Part Throttle Detent Downshift

At vehicle speeds of 40-55 mph (64-88 km/h) quickly depress the accelerator to a half open position and observe:

- TCC releases
- Transmission downshifts to 2nd gear immediately

Full Throttle Detent Downshift

observe:

- TCC releases
- Transmission downshifts to 2nd gear immediately
- Engine slows vehicle down

2. Move gear selector to "Drive" (D) and accelerate to 25 mph (40 km/h). Release the accelerator pedal while moving the gear selector to "First" (1) gear and observe:
   - TCC releases
   - Transmission downshifts to 1st gear immediately
   - Engine slows vehicle down

Coastdown Downshift

1. With the gear selector in "Drive" (D) accelerate to 3rd gear with TCC applied.
2. Release the accelerator pedal and lightly apply

the brakes to observe:

- TCC release
- Shift points for downshifts

Manual Gear Range Selection

Manual Second (2)

1. With vehicle stopped, place gear selector in "Second" (2) and accelerate to observe:
   - The first to second gear shift
2. Accelerate to 25 mph (40 km/h) and observe:
   - That a second to third gear shift does not occur
   - That TCC does not engage

Manual First (1)

1. With vehicle stopped, place gear selector in "First" (1), accelerate to 15 mph (24 km/h) and observe:
   - That no upshift occurs
   - That TCC does not engage

Reverse

1. With vehicle stopped, place gear selector in "Reverse" (R) and slowly accelerate to observe reverse gear operation.

Important

- All possible throttle positions and corresponding mph shift point information has not been provided.

TRANSMISSION PRESSURE CHECK PROCEDURE

Figure 2

Inspect

- Fluid level
- Vacuum modulator and vacuum supply, engine mechanical, emissions, electrical and fuel delivery systems. Refer to ENGINES (SEC. 6).
- Manual linkage

PRESSURE TAP CAN BE MADE ACCESSIBLE BY:

1. Provide proper transmission support.
2. Remove rear transmission crossmember side bolts.
3. Lower transmission enough to remove pressure tap plug which is located on the left side of the transmission.

NOTE: ON REPLACING PLUG, TORQUE TO 8 N·m (6 LB.-FT.)

4. After pressure gage and hose is installed, replace rear crossmember and side bolts and proceed with pressure checking procedure.

NOTE: PRESSURES ARE OFF OF THE SERVO APPLY.

CAR COASTING @ 30 MPH; VACUUM LINE CONNECTED; FOOT OFF THROTTLE	ZERO OUTPUT SHAFT SPEED; VACUUM LINE DISC FROM THE MOD; ENGINE RPM AT 1500
MIN. PSI	MAX. PSI
D 65	D 118
L_2 65	L_2 118
L_1 95	L_1 160

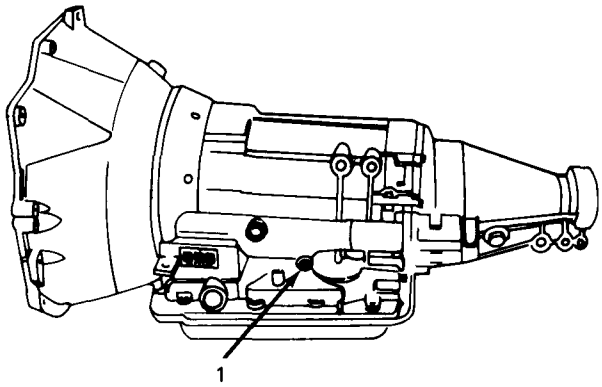

1 SERVO APPLY PLUG LOCATION

LH0005-3L30

Figure 2 Oil Pressure Check Procedure

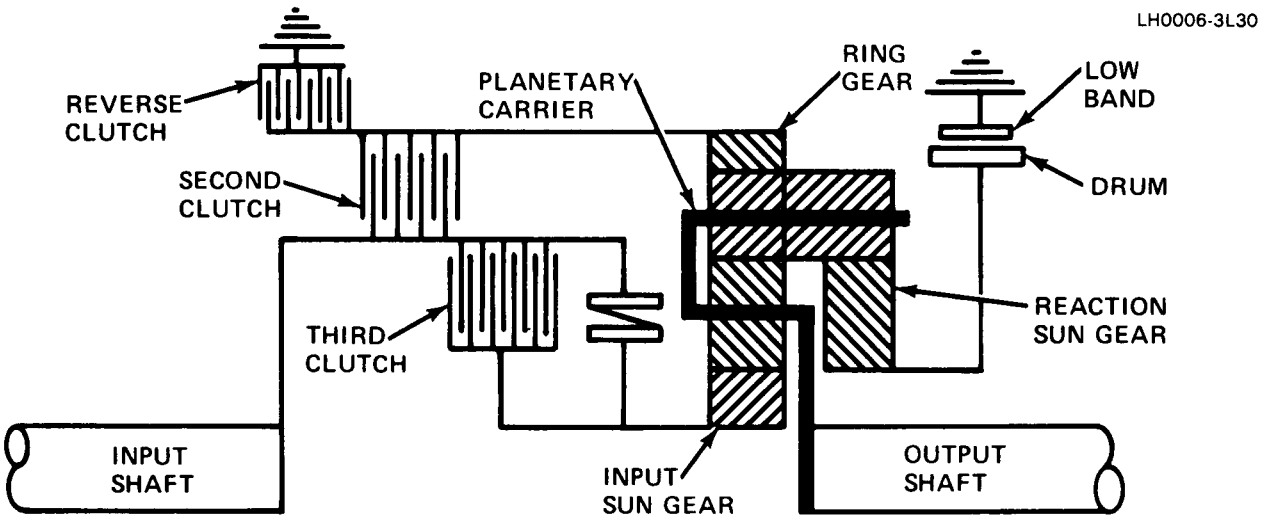

		REVERSE CLUTCH	SECOND CLUTCH	THIRD CLUTCH	LOW BAND	SPRAG
A.	NEUTRAL/PARK	Released	Released	Released	Released	Locked
B.	DRIVE RANGE, First Gear	Released	Released	Released	Applied	Locked
C.	L_1 RANGE	Released	Released	Applied	Applied	Locked
D.	DRIVE RANGE, Second Gear	Released	Applied	Released	Applied	Overrunning
E.	L_2 RANGE	Released	Applied	Released	Applied	Overrunning
F.	DRIVE RANGE, Third Gear	Released	Applied	Applied	Released	Locked
G.	REVERSE RANGE	Applied	Released	Applied	Released	Locked

Figure 3 Clutch Application Chart

Install or Connect

- Oil pressure gage
- Tachometer
- Hand operated vacuum pump
  - Plug vacuum supply line to modulator

TORQUE CONVERTER CLUTCH (TCC) DIAGNOSIS

To properly diagnose the Torque Converter Clutch (TCC) system, perform all electrical testing first and then the hydraulic testing. Refer to Torque Converter Section 6E2-C8 for additional information.

The TCC is applied by fluid pressure which is controlled by a solenoid located inside the Automatic Transmission assembly. The solenoid is energized or released by making or breaking an electrical circuit through a combination of switches and sensors.

TCC Electrical Diagnosis

- For electrical diagnosis of TCC, refer to the specific vehicle section in Section 8A, Electrical Diagnosis.
- For diagnosis of emission control related components of TCC, refer to the specific section of 6E, Driveability and Emissions.
- For the diagnosis of TCC Hydraulic Controls, refer to the Procedure and Wiring Diagrams provided in this section.

Functional Check Procedure

1. Install a tachometer
2. Operate the vehicle until proper operating temperature is reached
3. Drive vehicle at 50-55 mph (80-88 km/h) with light throttle (road load)
4. Maintaining throttle lightly touch the brake pedal and check for a slight bump when the TCC releases and a slight increase in engine rpm.
5. Release the brake, slowly accelerate and check for a re-apply of the converter clutch and a slight decrease in engine rpm.

Preliminary Checking Procedure

The purpose of the preliminary checking procedure is to isolate external (electrical) problems from internal (electrical or mechanical) ones.

Important

- Use only a scale type ohmmeter. High impedance type ohmmeters and those with a digital readout will not work.
- An ALDL scanner may be used to verify the electrical circuit. Remember, a completed circuit does not indicate that the solenoid will apply.
- Do not bench test using an automotive type battery. Accidentally crossed wires will damage the internal diodes of the TCC solenoid.

External Controls

- Connect voltmeter between transmission connector and ground.
- Turn key "ON".
- If "0" or low voltage is found, refer to Sections 6E and 8A for electrical diagnosis.
- If 12 volts are present at the connector, refer to the TCC hydraulic diagnosis.

TORQUE CONVERTER EVALUATION

Torque Converter Stator

The Torque Converter Stator roller clutch can have one of two different type malfunctions:

A. Stator Assembly freewheels in both directions.

B. Stator Assembly remains locked up at all times.

Condition A-Poor Acceleration Low Speed

The vehicle tends to have poor acceleration from a standstill. At speeds above 30-35 mph (50-55 km/h), the car may act normal. If poor acceleration is noted, it should first be determined that the exhaust system is not blocked, the engine timing is correct and the transmission is in first (1st) gear when starting out.

If the engine freely accelerates to high rpm in "Neutral" (N), it can be assumed that the engine and exhaust system are normal. Checking for poor performance in "Drive" (D) and "Reverse" (R) will help determine if the stator is freewheeling at all times.

Condition B-Poor Acceleration High Speed

Engine rpm and car speed limited or restricted at high speeds. Performance when accelerating from a standstill is normal. Engine may over-heat. Visual examination of the converter may reveal a blue color from over-heating.

If the converter has been removed, the stator roller clutch can be checked by inserting a finger into the splined inner race of the roller clutch and trying to turn the race in both directions. The inner race should turn freely clockwise, but not turn or be very difficult to turn counterclockwise.

The Converter Should Be Replaced If:

- Leaks externally, such as at the hub weld area.
- Converter has an imbalance which cannot be corrected. (Refer to Converter Vibration Test Procedure).
- Converter is contaminated with engine coolant containing antifreeze.

The Converter Should Not Be Replaced If:

- The oil has an odor, is discolored, and there is no evidence of metal or clutch facing particles.
- The threads in one or more of the three converter bolt holes are damaged.
- Correct with thread insert. (Refer to Section 6A).

CONDITION	INSPECT COMPONENT	FOR CAUSE
LOW FLUID LEVEL	• Filler Tube Seal Ring	— Leak.
	• Case (101)	
	• Shifter Shaft Seal (142)	
	• Extension Seal (125)	
	• Oil Pan Gasket (170)	
	• Extension To Case Gasket (126)	
	• Vacuum Modulator Seal Ring (117)	
	• Drain Plug Gasket (174)	
	• Cooler Line Fittings (104)	
	• Detent Cable Seal Ring	
	• Line Pressure Gage Connection	
	• Electrical Connector Seal	
	• Vacuum Modulator (118)	
FLUID COMING OUT OF FILLER TUBE	• Fluid Level	— High.
	• Transmission Fluid	— Coolant contamination.
	• External Vent (185)	— Clogged with mud.
	• Oil Pump Suction Circuit	— Leak.
EXTERNAL TORQUE CONVERTER LEAKS	• Torque Converter (201)	— Leak.
	• Converter Housing Seal (204)	
	• Converter Housing To Case Seal (223), (207)	
	• Attaching Bolts (202), (203)	— Loose.
LOW OIL PRESSURE	• Fluid Level	— Low.
	• Suction Screen (154)	— Clogged.
	• Pressure Regulator Valve (216)	— Malfunction.
	• Valve Body Sealing Ball	— Dropped out.
	• Oil Pump Suction Circuit	— Leak.
	• Oil Pressure Circuit	
HIGH OIL PRESSURE	• Modulator Vacuum Line	— Leaky or interrupted.
	• Vacuum Modulator (118)	— Failure.
	• Engine Or Accessory Vacuum System	— Leak.
	• Pressure Regulator Valve (216)	— Malfunction.
ALL ILLUSTRATION NUMBERS REFER TO HYDRA-MATIC 3L30 UNIT REPAIR SECTION		LH0007-3L30

Figure 4 Diagnosis Chart A

CONDITION	INSPECT COMPONENT	FOR CAUSE
EXCESSIVE EXHAUST SMOKE	• Vacuum Modulator (118)	– Failure.
	• Transmission	– Leak on hot exhaust pipe.
NO CONVERTER CLUTCH APPLY	• Transmission Electrical Circuit	– Improper voltage supply. – Improper ground path. – Defective connector, wiring harness, pressure switch or solenoid.
	• Converter Clutch Apply Valve (217)	– Sticking.
	• Solenoid "O" Ring	– Cut or leaking.
	• Turbine Shaft "O" Ring (318)	
	• Oil Pump Wear Plate Or Gasket (207), (208)	– Mispositioned.
	• Oil Pump To Converter Housing Bolts (202)	– High or uneven torque.
CONVERTER SHUDDER OR NO CONVERTER CLUTCH APPLY	• Converter Clutch Apply Valve (217)	– Sticking.
	• Converter Clutch Apply Passage	– Restricted.
	• Oil Pressure	– Low.
	• Engine Mechanical, Emissions, Electrical & Fuel Delivery Systems	– Improper operation.
	• Turbine Shaft "O" Ring (318)	– Cut or leaking.
NO STARTING IN ANY DRIVE RANGE	• Fluid Level	– Low.
	• Suction Screen	– Clogged.
	• Manual Valve Linkage (139) Or Inner Transmission Selector Lever (140)	– Disconnected.
	• Input Shaft (319)	– Broken.
	• Pressure Regulator Valve (216)	– Stuck in open position.
	• Oil Pump (222)	– Failure.
STARTS IN DRIVE RANGE ONLY AFTER REPEATED MOVEMENT OF SELECTOR LEVER	• Selector Lever Shaft Retaining Pin (143)	– Dropped out.
	• Connecting Rod To Manual Valve (139)	– Shifting.
	• Selector Lever Shaft Nut (144)	– Loose.
NO STARTING AFTER SHIFTING LEVER FROM "P" TO "D", "L2", OR "L1"	• Parking Pawl (122)	– Does not disengage.

ALL ILLUSTRATION NUMBERS REFER TO HYDRA-MATIC 3L30 UNIT REPAIR SECTION LH0008-3L30

Figure 5 Diagnosis Chart B

CONDITION	INSPECT COMPONENT	FOR CAUSE
SUDDEN STARTING ONLY AFTER ENGINE RPM INCREASE	• Band Servo Piston (162) • Fluid Level • Oil Pump (222) • Oil Screen (154) • Valve Body Sealing Ball	– Jamming. – Low. – Defective. – Missing. – Dropped out.
HEAVY JERKING WHEN STARTING	• Oil Pressure • Modulator Valve (118) • Pressure Regulator Valve (216) • Valve Body Sealing Ball	– Low. – Wrong part. – Stuck. – Dropped out.
NO STARTING IN "D" OR "L2", BUT IN "L1" and "R"	• Input Sprag (333)	– Failure. – Installed backwards.
NO STARTING IN "D", "L2" OR "L1", BUT IN "R"	• Band (404) • Parking Pawl (122) • Band Servo Piston (162) • Band Servo	– Worn. – Does not disengage. – Jamming. – Excessive leakage.
NO STARTING IN "R", BUT IN ALL OTHER RANGES	• Reverse Clutch	– Failure.
STARTING IN SELECTOR LEVER POSITION "N"	• Selector Lever Linkage (139) • Planetary Gear Set (338) • Band (404)	– Improper. – Broken. – Improper adjustment.
NO 1-2 UPSHIFT IN "D" AND "L2" (Remains In 1st Gear At All Speeds)	• Governor Valves (413), (415) • 1-2 Shift Valve (516) • Oil Pump Hub Seal Rings (225) • Governor Pressure Circuit • Governor Screen (409)	– Stuck. – Stuck in 1st gear position. – Leak. – Clogged.
NO 2-3 UPSHIFTS IN "D" (Remains In 2nd Gear At All Speeds)	• 2-3 Shift Valve (519) • Governor Pressure Circuit	– Stuck. – Leak.
UPSHIFTS IN "D" AND "L2" AT FULL THROTTLE ONLY	• Vacuum Modulator (118) • Modulator Vacuum Line • Engine Or Accessory Vacuum System • Detent Valve Or Cable (527)	– Failure. – Leaky or interrupted. – Leak. – Stuck.

ALL ILLUSTRATION NUMBERS REFER TO HYDRA-MATIC 3L30 UNIT REPAIR SECTION

LH0009-3L30

Figure 6 Diagnosis Chart C

CONDITION	INSPECT COMPONENT	FOR CAUSE
UPSHIFTS IN "D" AND "L2" AT PART THROTTLE ONLY	• Detent Pressure Regulator Valve (527) • Detent Cable	– Stuck. – Broken or misadjusted.
DRIVING ONLY IN 1ST GEAR OF "D" AND "L2" RANGE (Transmission Blocks In 2nd Gear And "R")	• "L1" & "R" Control Valve (512), (513)	– Stuck in "L1" or "R" position.
NO PART THROTTLE 3-2 DOWNSHIFT AT LOW VEHICLE SPEEDS	• 3-2 Downshift Control Valve (524)	– Stuck.
NO FORCED DOWNSHIFT	• Detent Cable • Detent Pressure Regulator Valve (527)	– Broken or improperly adjusted. – Stuck.
AFTER FULL THROTTLE UPSHIFT, TRANSMISSION SHIFTS IMMEDIATELY INTO LOWER GEAR UPON EASING OFF ACCELERATOR PEDAL	• Detent Valve (527) • Detent Cable • Modulator Vacuum Line	– Stuck in open position. – Stuck. – Interrupted.
TRANSMISSION SHIFTS INTO LOWER GEAR AT HIGHER SPEEDS	• Selector Lever Shaft Retaining Pin (143) • Selector Lever Linkage To Manual Valve (139)	– Dropped out. – Loose connection.
HARD DISENGAGEMENT OF SELECTOR LEVER FROM "P" POSITION	• Parking Pawl Actuating Rod (123) • Manual Selector Lever (140)	– Steel guide bushing missing. – Stuck.
SLIPPING 1-2 UPSHIFTS (Engine Flare)	• Oil Pressure • Valve Body Sealing Ball • 2nd Clutch Piston Seals (304), (305) • 2nd Clutch Piston Centrifugal Ball • 2nd Clutch Piston (306) • 2nd Clutch Plates (311), (312), (313) • Oil Pump Hub Seal Rings (225)	– Low. – Dropped out. – Leak. – Stuck open. – Cracked or broken. – Worn. – Leak.
SLIPPING 2-3 UPSHIFTS (Engine Flare)	• Oil Pressure • Band (404) • Valve Body Sealing Ball	– Low. – Loose adjustment. – Dropped out.

ALL ILLUSTRATION NUMBERS REFER TO HYDRA-MATIC 3L30 UNIT REPAIR SECTION

LH0010-3L30

Figure 7 Diagnosis Chart D

CONDITION	INSPECT COMPONENT	FOR CAUSE
SLIPPING 2-3 UPSHIFTS (Engine Flare) (Cont.)	• 3rd Clutch Piston Seals (320), (321)	– Leak.
	• 3rd Clutch Piston Centrifugal Ball	– Dropped out.
	• 3rd Clutch Piston (322)	– Cracked or broken.
	• Input Shaft Bushing	– Worn.
ABRUPT 1-2 UPSHIFT	• Oil Pressure	– High.
	• 1-2 Accumulator Valve (504)	– Stuck.
	• 2nd Clutch Spring Cushion (229)	– Broken.
	• 2nd Gear Ball Valve	– Missing.
ABRUPT 2-3 UPSHIFT	• Oil Pressure	– High.
	• Band (404)	– Incorrect adjustment.
ABRUPT 3-2 DETENT DOWN-SHIFT AT HIGH SPEED	• High Speed Downshift Valve (507)	– Stuck open.
	• Band (404)	– Incorrect adjustment.
ABRUPT 3-2 COAST DOWNSHIFT	• Low Speed Downshift Timing Valve (509)	– Stuck open.
HIGH SPEED FORCED DOWNSHIFT FLARE	• Oil Pressure	– Low.
	• Band (404)	– Loose adjustment.
LOW SPEED FORCED DOWNSHIFT FLARE	• Oil Pressure	– Low.
	• Band (404)	– Loose adjustment.
	• High Speed Downshift Timing Valve (507)	– Stuck closed.
	• Sprag Race (336)	– Does not grip on 3-1 downshift.
NO ENGINE BRAKING IN "L1" RANGE	• Selector Lever Linkage (139)	– Improper adjustment.
	• Manual Low Control Valve (512)	– Stuck.
NO ENGINE BRAKING IN "L2" RANGE	• Selector Lever Linkage (139)	– Improper adjustment.

ALL ILLUSTRATION NUMBERS REFER TO HYDRA-MATIC 3L30 UNIT REPAIR SECTION

LH0011-3L30

Figure 8 Diagnosis Chart E

CONDITION	INSPECT COMPONENT	FOR CAUSE
NO PARK	• Selector Lever Linkage (139) • Parking Lock Actuator Spring (121) • Parking Pawl (122) • Governor Hub (408)	— Improper adjustment. — Failure.
NOISE IN ALL DRIVE RANGES	• Sun Gear To Planetary Gears • Planetary Carrier Lock Plate • Thrust Bearing • Bearing Bushings • Transmission Axial Play • Governor Hub Parking Pawl Spring Contacts • Converter Balancing Weights • Converter Housing Attaching Bolt (203)	— Excessive backlash. — Loose. — Defective. — Worn. — Excessive. — Unhooked. — Loose. — Loose/contacting converter.
SCREECHING WHEN STARTING	• Converter (201)	— Failure.
SHORT, VIBRATING HISS SHORTLY BEFORE 1-2 UPSHIFT	• Reverse Clutch Damping Cushion	— Worn into transmission case.
BUZZ	• Oil Filter & Gasket (153), (154)	— Improper installation.
EXCESSIVE IRON DUST PICKED UP BY OIL PAN MAGNET	• Oil Pump (222) • Governor Hub (408) • 2nd Clutch Hub	— Worn.
EXCESSIVE ALUMINUM DUST IN OIL PAN (Cannot Be Picked Up By Magnet)	• Case Thrust Face • Case Rear Bore • Stator Thrust Washer	— Worn. — Improper converter end clearance.

ALL ILLUSTRATION NUMBERS REFER TO HYDRA-MATIC 3L30 UNIT REPAIR SECTION LH0052-3L30

Figure 9 Diagnosis Chart F

PARK AND NEUTRAL—ENGINE RUNNING

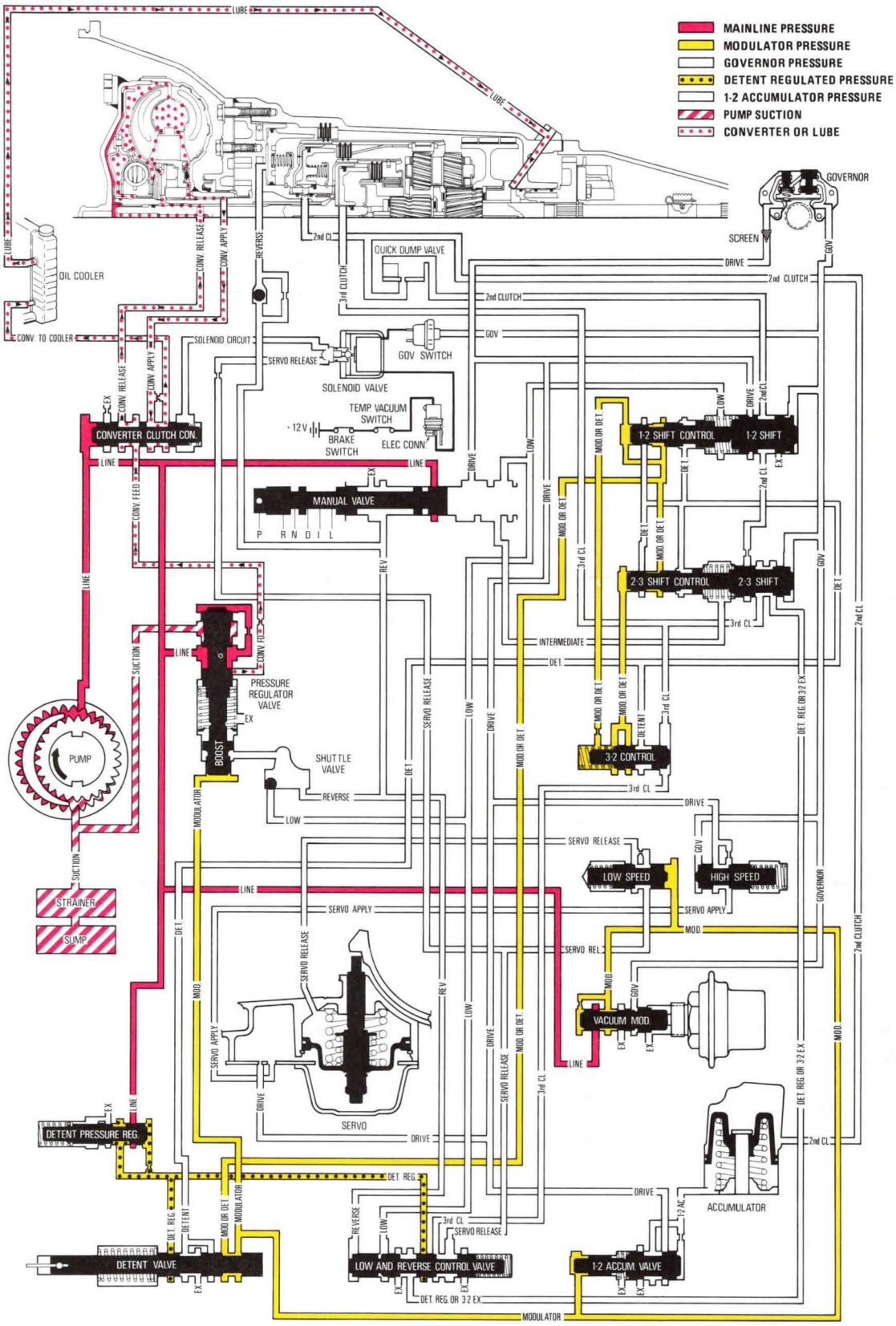

Figure 10 Neutral and Park — Engine Running

PARK AND NEUTRAL—ENGINE RUNNING

REVERSE CLUTCH – RELEASED

THIRD CLUTCH – RELEASED

SECOND CLUTCH – RELEASED

LOW BAND – RELEASED

SPRAG – LOCKED

Whenever the engine is running with the selector in Neutral, oil is pulled from the sump into the oil pump and is dispensed from the pump under pressure. Line oil is directed to the vacuum modulator valve, to the pressure regulator valve and to the manual valve. The converter is fed through the pressure regulator valve, the return oil from the converter being directed through the cooler and back into the transmission's lubricating system.

Line oil directed to the vacuum modulator valve becomes regulated to modulator oil and acts on the pressure regulator boost valve, the low speed downshift timing valve, the 1-2 accumulator valve, and the detent valve. The modulator oil passes through the detent valve to act on the 1-2 shift control valve, the 3-2 control valve and the 2-3 shift control valve. Line oil passes through the manual valve, and is regulated at the detent pressure regulator valve before being directed to the Reverse and Low control valve.

SUMMARY

The converter is filled, the clutches and low bands are released. The transmission is in Neutral.

LH0012-3L30

Figure 11 Neutral and Park — Engine Running

DRIVE RANGE—FIRST GEAR

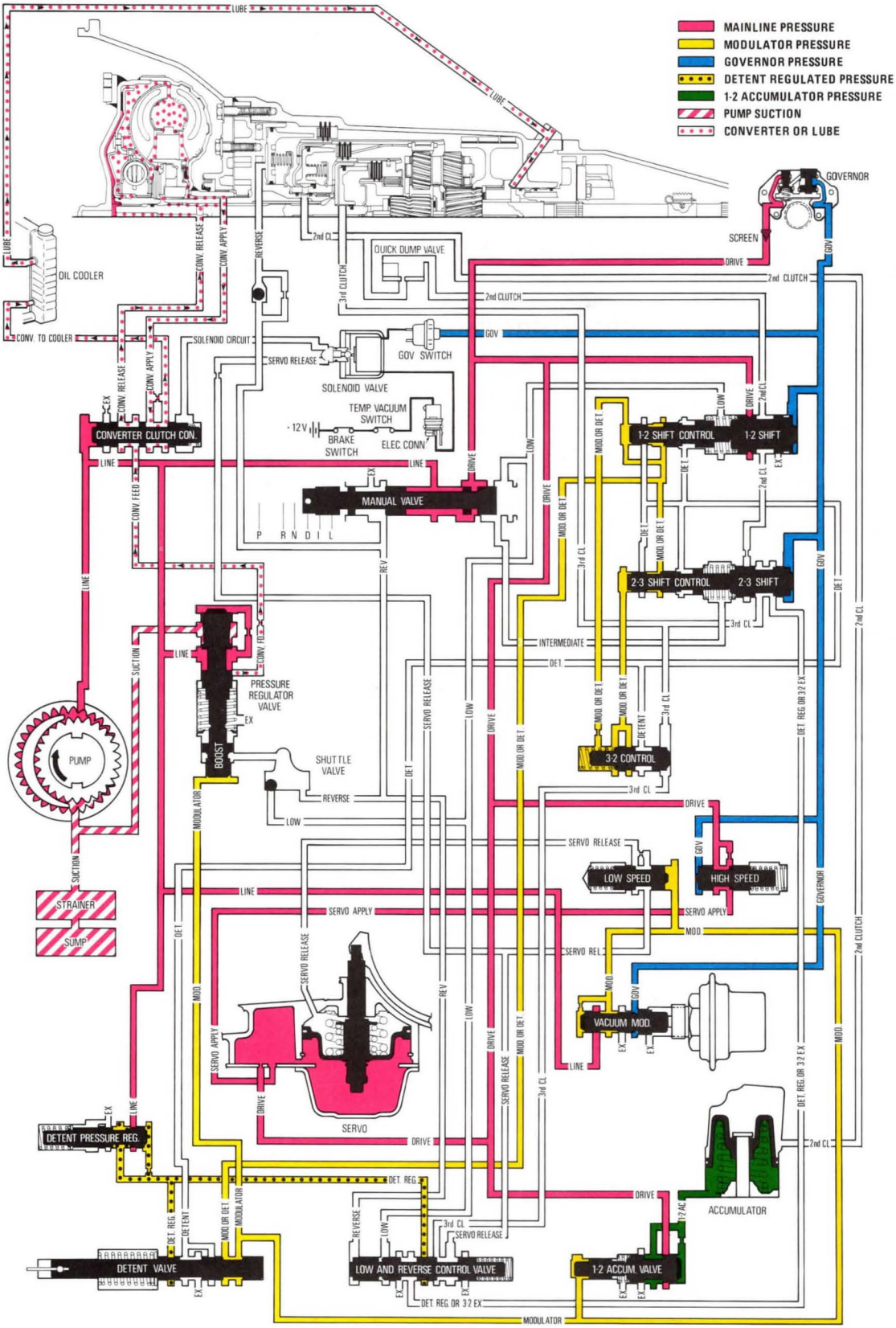

Figure 12 Drive Range — First Gear

DRIVE RANGE—FIRST GEAR

REVERSE CLUTCH – RELEASED

THIRD CLUTCH – RELEASED

SECOND CLUTCH – RELEASED

LOW BAND – APPLIED

SPRAG – LOCKED

When the selector lever is moved to the "Drive" position on the quadrant, the manual valve is positioned to allow line oil to enter the drive circuit and is directed to the 1-2 shift valve, the governor, the 1-2 accumulator valve and the high speed downshift timing valve.

The drive oil directed to the 1-2 accumulator valve is regulated and directed to fill the bottom portion of the accumulator. The drive oil also passes through an orifice at the high speed downshift timing valve and passes through the valve to apply the low band servo.

Drive oil at the governor is regulated to a variable pressure which increases with vehicle speed and acts on the ends of the 1-2, 2-3 shift valves, high speed downshift timing valve, and the vacuum modulator valve.

SUMMARY

The clutches are off, the low band is applied, the transmission is in Drive Range — First Gear.

LH0014-3L30

Figure 13 Drive Range — First Gear

DRIVE RANGE—SECOND GEAR

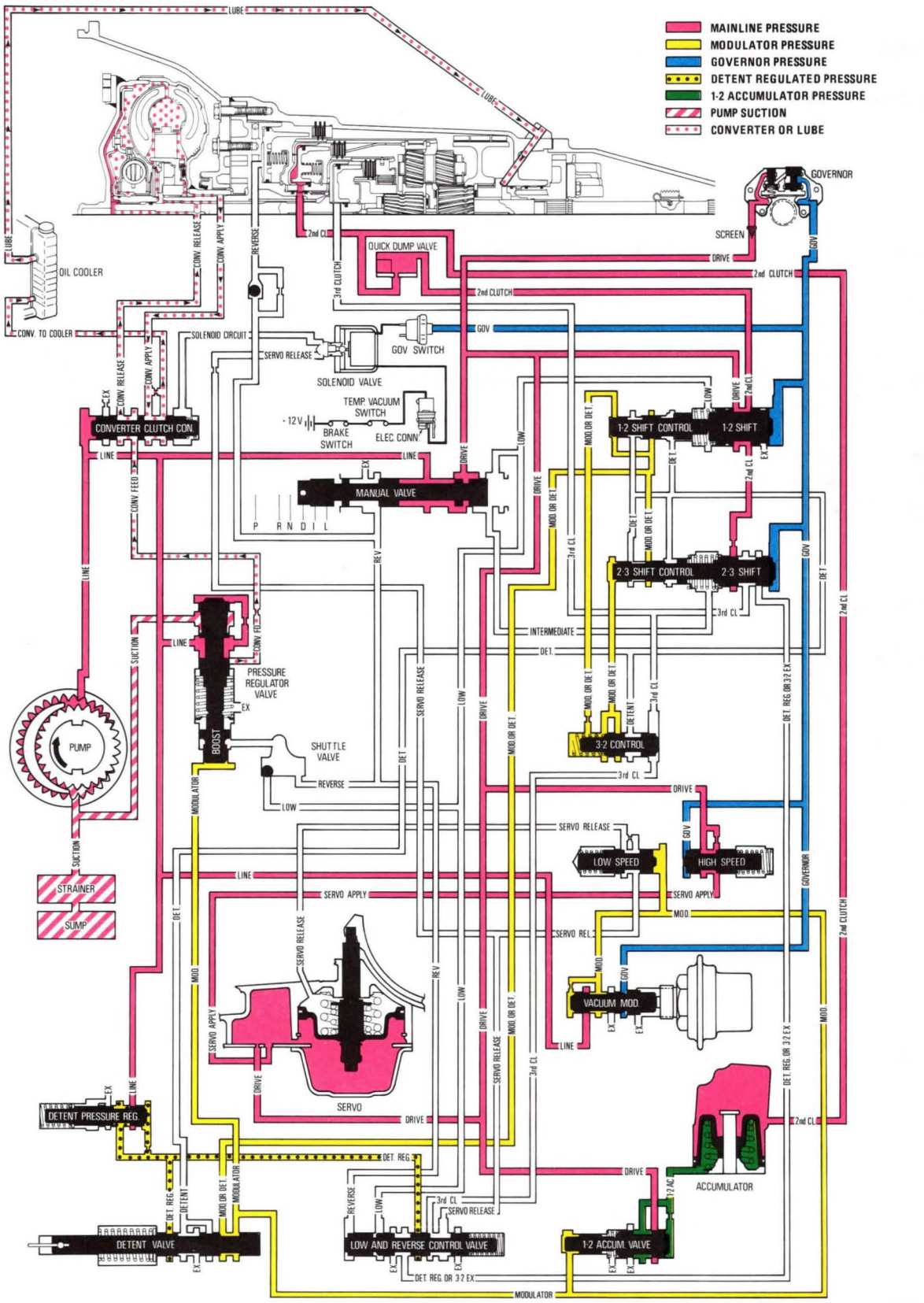

Figure 14 Drive Range — Second Gear

DRIVE RANGE—SECOND GEAR

REVERSE CLUTCH – RELEASED

THIRD CLUTCH – RELEASED

SECOND CLUTCH – APPLIED

LOW BAND – APPLIED

SPRAG – OVERRUNNING

As the vehicle increases speed, the governor allows more drive oil to pass through, and this increased pressure, acting on the end of the 1-2 shift valve, overcomes the 1-2 shift valve spring pressure and allows drive oil to pass through the valve to feed the second clutch oil passages.

Second clutch oil passes through the second clutch orifice control valve, and is metered to the second clutch piston to begin to apply the second clutch, while a portion of the oil is directed to the accumulator. As the upper portion of the accumulator fills with second clutch oil, it overcomes the lesser pressure of 1-2 accumulator oil and spring at the bottom of the accumulator piston, forcing the piston downward. The upper portion of the accumulator is now filled, allowing full oil pressure to the second clutch piston for the final apply. The accumulator, therefore, acts as a reservoir to produce a damping effect for a smooth second clutch apply and the 1-2 shift.

Second clutch oil from the 1-2 shift valve is simultaneously directed to the 2-3 shift valve to be used as the oil source for the 2-3 shift.

SUMMARY

The second clutch is on, the band is on, the transmission is in Drive Range — Second Gear.

LH0016-3L30-R1

Figure 15 Drive Range — Second Gear

DRIVE RANGE—THIRD GEAR

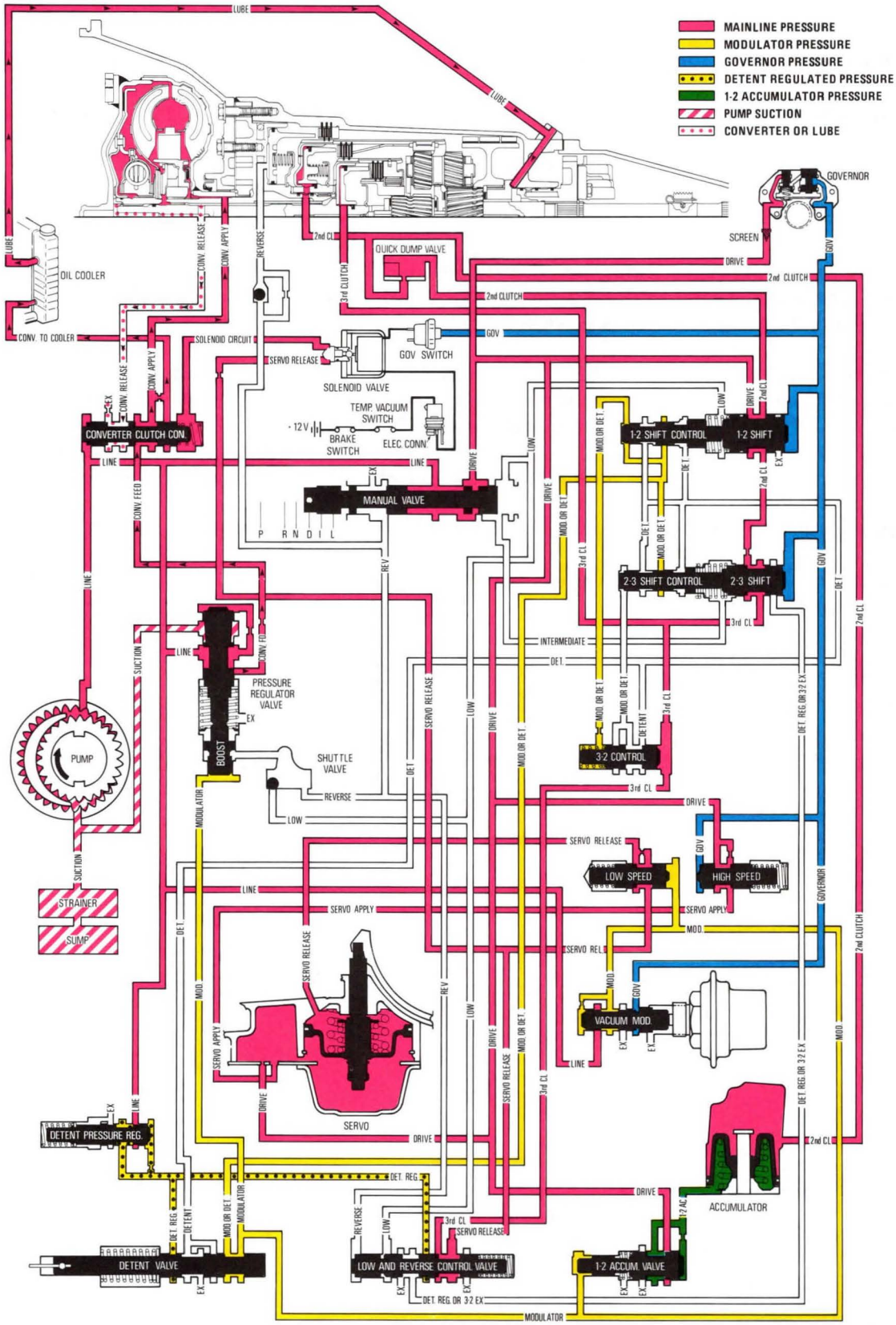

Figure 16 Drive Range — Third Gear

DRIVE RANGE—THIRD GEAR

REVERSE CLUTCH – RELEASED

THIRD CLUTCH – APPLIED

SECOND CLUTCH – APPLIED

LOW BAND – RELEASED

SPRAG – LOCKED

As vehicle speed increases, the governor allows more oil to pass through to act against the spring at the 2-3 shift valve. This allows the second clutch oil at the 2-3 shift valve to be released and pass through the valve as third clutch oil, directed to the third clutch piston to apply third clutch. At the same time, third clutch oil is directed to the 3-2 control valve, acting against the spring and modulator oil, cutting off modulator oil pressure to the 2-3 shift control valve. Third control oil also is directed to the Reverse and Low control valve and passes through the valve as servo release oil to the low speed downshift timing valve. The low speed downshift timing valve is held open against the spring by increased modulator oil pressure. The oil passes through the valve and is directed to the top of the low band servo, to act with the servo piston spring and force the servo piston downward, releasing the low band.

Servo release oil is also directed from near the low reverse control valve through an orifice to the converter clutch control valve and the solenoid area. Oil will bleed out through the solenoid until the governor pressure (and vehicle speed) closes the governor switch. The solenoid is then energized to close the bleed and oil pressure can now move the converter clutch valve to apply the TCC.

SUMMARY

The second clutch is on, the third clutch is on, the band is released. The transmission is in Drive Range — Third Gear — as speed increases the TCC is applied.

LH0018-3L30

Figure 17 Drive Range — Third Gear

MANUAL SECOND

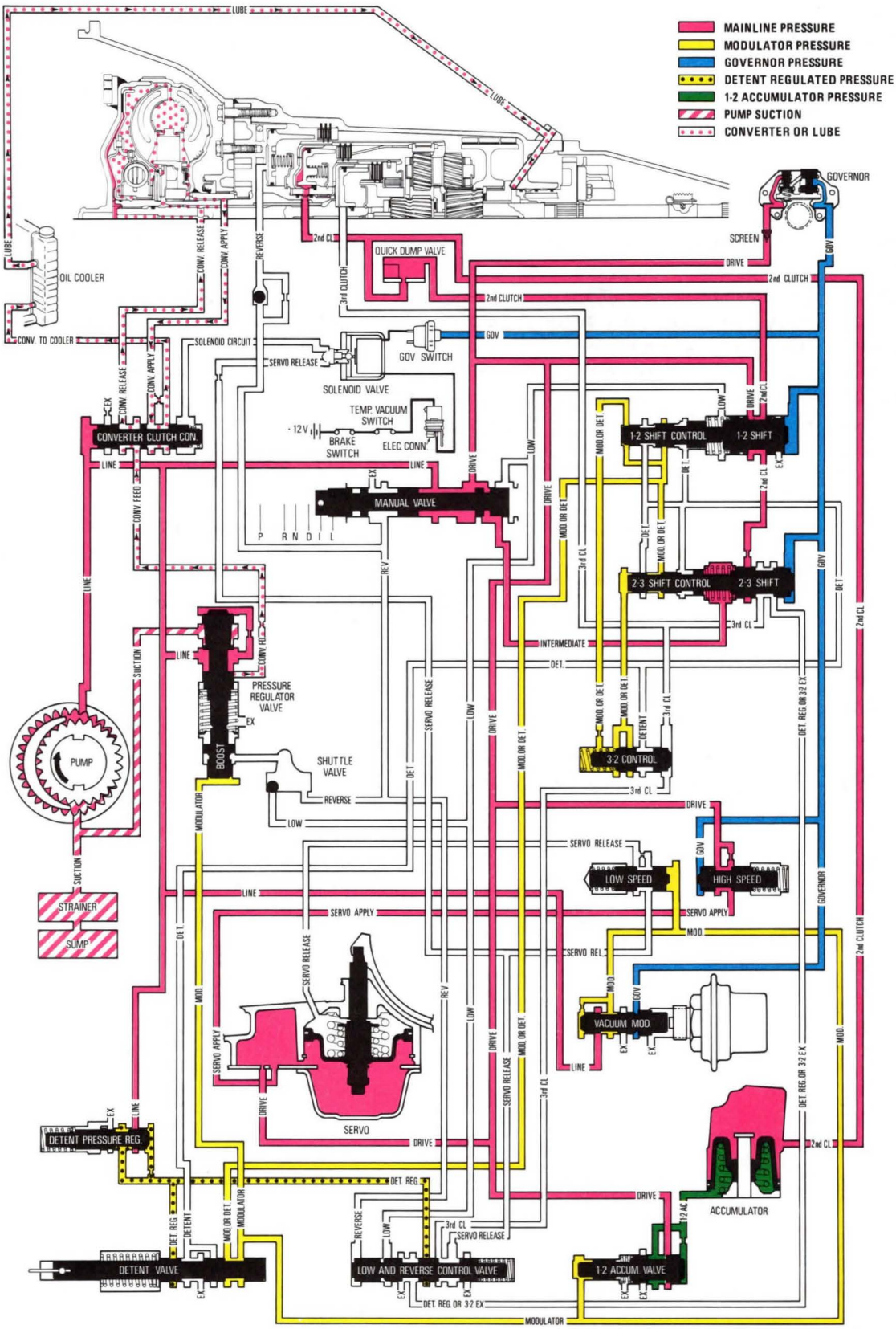

Figure 18 Manual Second

MANUAL SECOND

REVERSE CLUTCH – RELEASED

THIRD CLUTCH – RELEASED

SECOND CLUTCH – APPLIED

LOW BAND – APPLIED

SPRAG – OVERRUNNING

The selector lever is moved to the Intermediate position on the quadrant, the manual valve is positioned to allow drive oil and intermediate oil to pass through the valve. Intermediate oil is directed to the pressure regulator boost control cavity, seating the check ball at the reverse passage. Intermediate oil is then directed to the pressure regulator valve downward to increase the oil pressure in the circuit. At the same time, the intermediate oil from the manual valve is directed to the 2-3 shift valve train closing off the supply of third clutch oil in the circuit, which is exhausted through the reverse and low control valve.

SUMMARY

With third clutch oil exhausted, the third clutch is off, the second clutch is on, the low band servo is applied. The transmission is in Manual Second.

LH0020-3L30

Figure 19 Manual Second

MANUAL FIRST

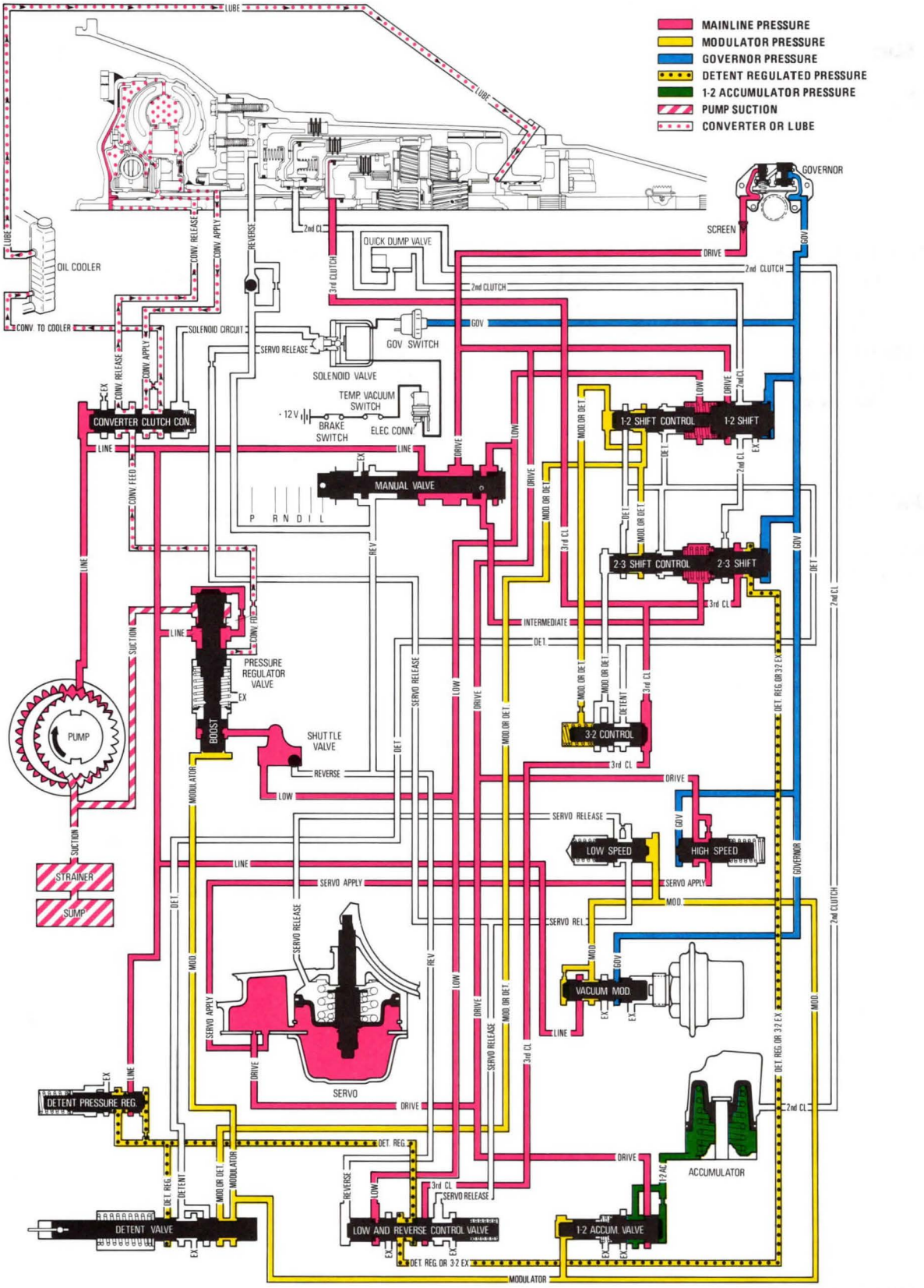

Figure 20 Manual First

MANUAL FIRST

REVERSE CLUTCH – RELEASED

THIRD CLUTCH – APPLIED

SECOND CLUTCH – RELEASED

LOW BAND – APPLIED

SPRAG – LOCKED

When the selector lever is moved to the Low position on the quadrant, the manual valve is positioned to allow drive oil, intermediate oil and low oil to pass through the valve. Low oil is directed to the 1-2 shift valve train which acts with the 1-2 valve spring against governor oil pressure to close off drive oil from passing into the second clutch passage. At the same time, low oil is directed to the reverse and low control valve and acts against the spring to allow detent regulated oil at the reverse and low control valve to flow to the 2-3 shift valve, which is bottomed in its bore by intermediate oil pressure and the valve spring. The detent oil passes through the 2-3 shift valve and into the third clutch passages to apply the third clutch and to close off modulator oil pressure from the 3-2 control valve to the 2-3 shift control valve. Third control oil is also directed to the reverse and low control valve, which is held open against its spring by low oil pressure, and closes off the source of supply to the servo release passage, to allow the servo to apply the low band. Intermediate oil seats the check ball at the reverse passage at the pressure regulator boost valve cavity and continues to the pressure regulator valve to increase oil pressure in the circuit.

SUMMARY

The third clutch is on, the band is on. The transmission is in Manual First.

LH0022-3L30

Figure 21 Manual First

REVERSE

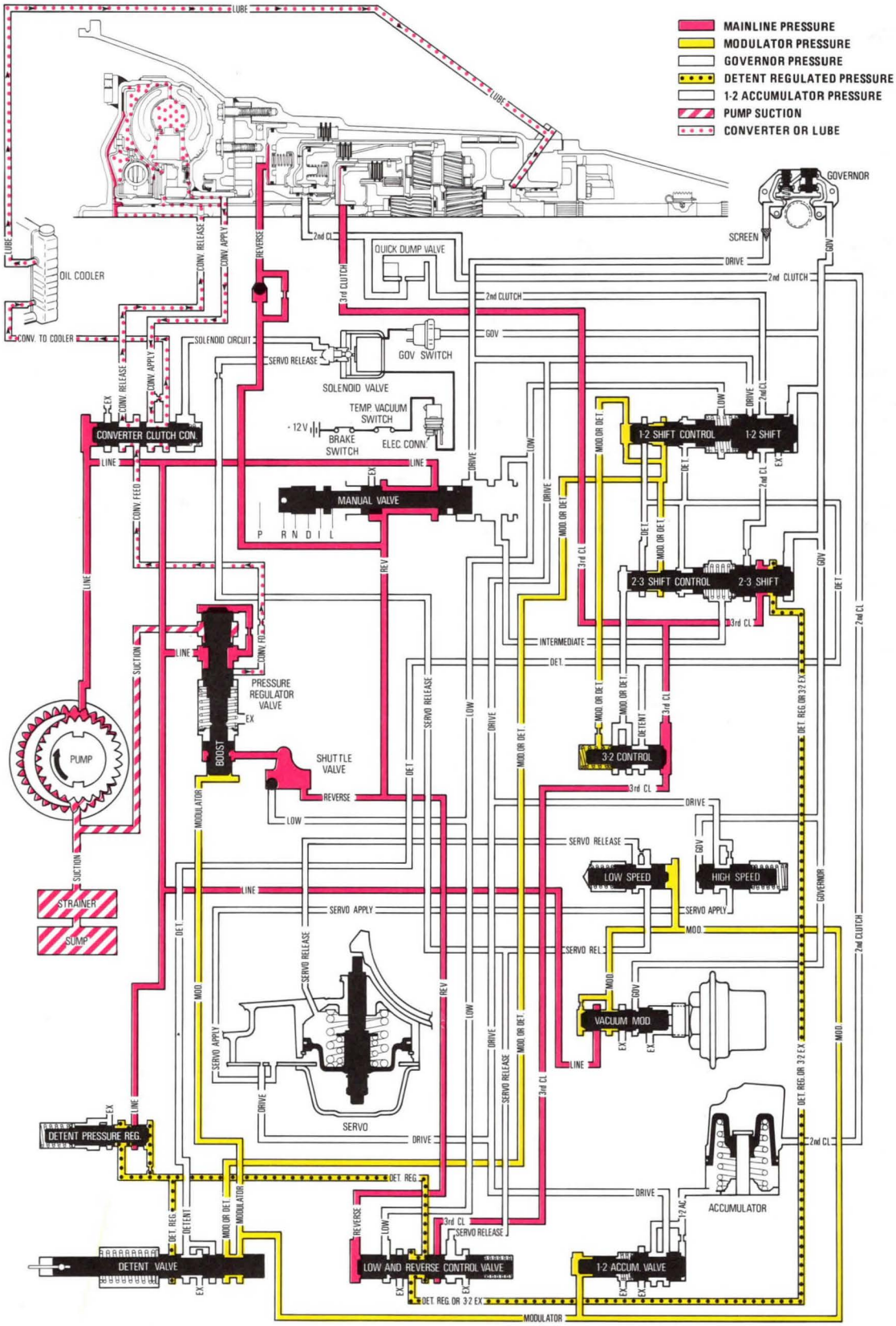

Figure 22 Reverse

REVERSE

REVERSE CLUTCH – APPLIED

THIRD CLUTCH – APPLIED

SECOND CLUTCH – RELEASED

LOW BAND – RELEASED

SPRAG – LOCKED

When the selector lever is moved to the Reverse position on the quadrant, the manual valve is positioned to allow reverse oil to pass through the manual valve into the reverse oil passage. The reverse oil applies the reverse clutch. At the same time, reverse oil is directed to the pressure regulator boost control valve cavity to seat the check ball and prevent reverse oil passing into the intermediate oil passage. It is then directed to the pressure regulator boost valve forcing the pressure regulator valve downward to increase oil pressure in the circuit.

Reverse oil is also directed to act on the end of the reverse and low control valve against the spring to allow detent regulated oil to pass through the valve to the 2-3 shift valve. The detent regulated oil passes through the 2-3 shift valve and into the third clutch oil passages to apply the third clutch. The third clutch oil also acts on the end of the 3-2 control valve against the spring and modulator oil pressure, closing off the supply of modulator oil to the 2-3 shift control valve. Third clutch oil at the reverse and low control valve is closed off from passing through the valve, and into the servo release passage.

SUMMARY

The reverse clutch is on and the third clutch is on. The transmission is in Reverse Range.

LH0024-3L30

Figure 23 Reverse

DETENT DOWNSHIFT

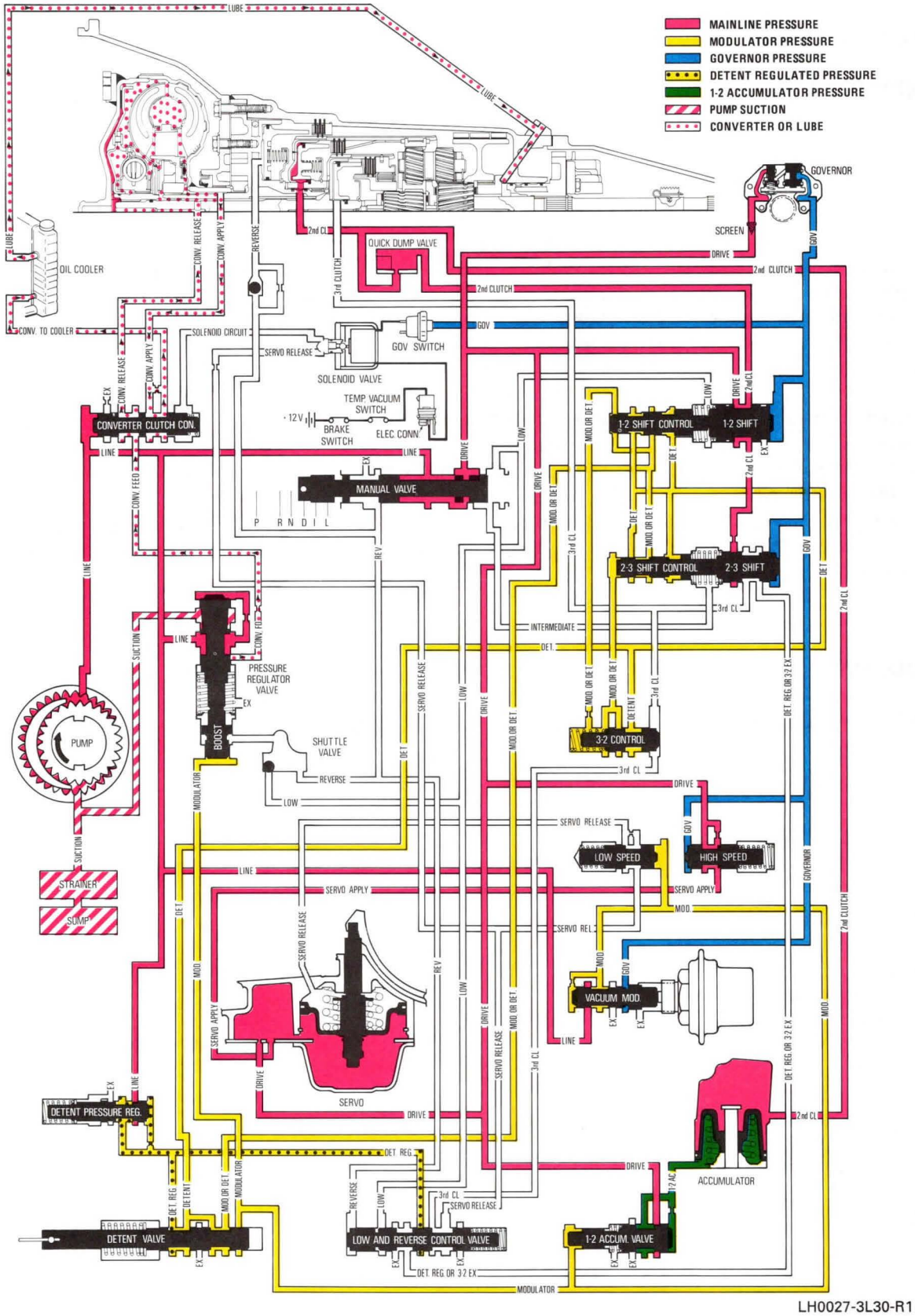

Figure 24 Detent Downshift

DETENT DOWNSHIFT

(Valves In Second Gear Position)

REVERSE CLUTCH – RELEASED

THIRD CLUTCH – RELEASED

SECOND CLUTCH – APPLIED

LOW BAND – APPLIED

SPRAG – OVERRUNNING

With the selector lever in the Drive position, detent downshifts are possible by fully depressing the accelerator pedal. This causes the mechanical linkage to the detent valve to move the detent valve, cutting off modulator oil to the 3-2 control valve, the 1-2 shift control valve, the 1-2 accumulator valve and the 2-3 shift control valve.

The mechanical linkage holding the detent valve open allows the detent regulated oil to pass into the detent oil passage and is directed to the 2-3 shift control valve, acting against the spring and governor oil pressure. It is also directed to the 3-2 control valve, acting against the spring, allowing detent oil to pass through the valve and act on the end of the 2-3 shift control valve to keep the valve bottomed in its bore against governor oil pressure. Second clutch oil at the 2-3 shift valve is closed off from passing into the third clutch passages by the detent oil pressure holding the 2-3 shift valve bottomed in its bore.

SUMMARY

The second clutch on the low band is on. The valves are in Second Gear position under detent conditions.

LH0026-3L30

Figure 25 Detent Downshift

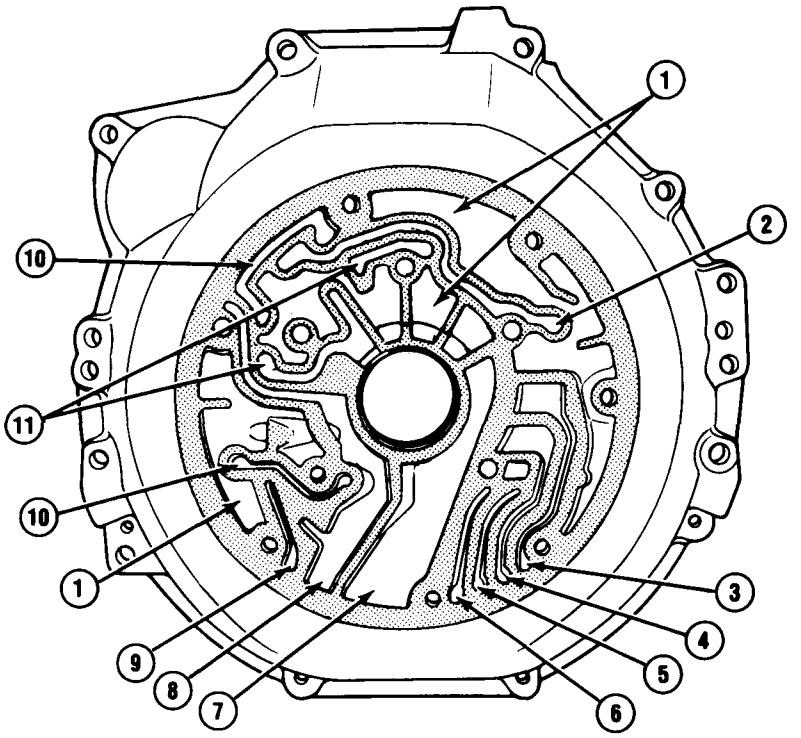

1. EXHAUST
2. CONVERTER OUT
3. 2ND CLUTCH
4. 3RD CLUTCH
5. MODULATOR
6. BOOST
7. SUCTION
8. LINE
9. REVERSE CLUTCH
10. CONVERTER IN
11. CONVERTER IN/OUT

LH0028-3L30

Figure 26 Converter Housing Fluid Passages

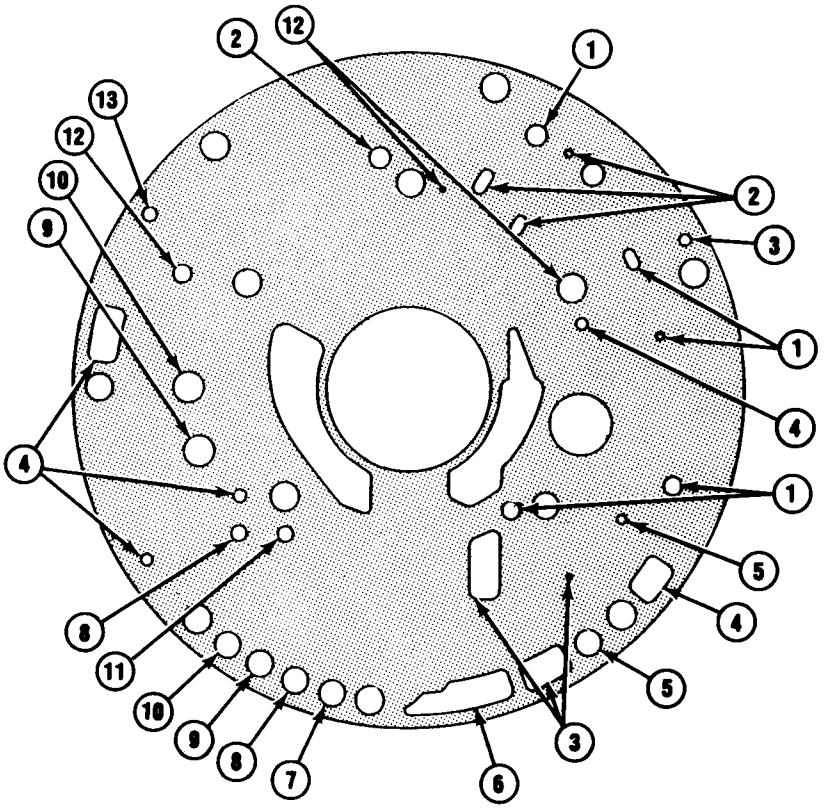

1. CONVERTER IN
2. CONVERTER IN/OUT
3. LINE
4. EXHAUST
5. REVERSE CLUTCH
6. SUCTION
7. 3RD CLUTCH
10. 2ND CLUTCH
11. INTERMEDIATE
12. CONVERTER OUT
13. VENT

LH0029-3L30

Figure 27 Wear Plate Fluid Passages

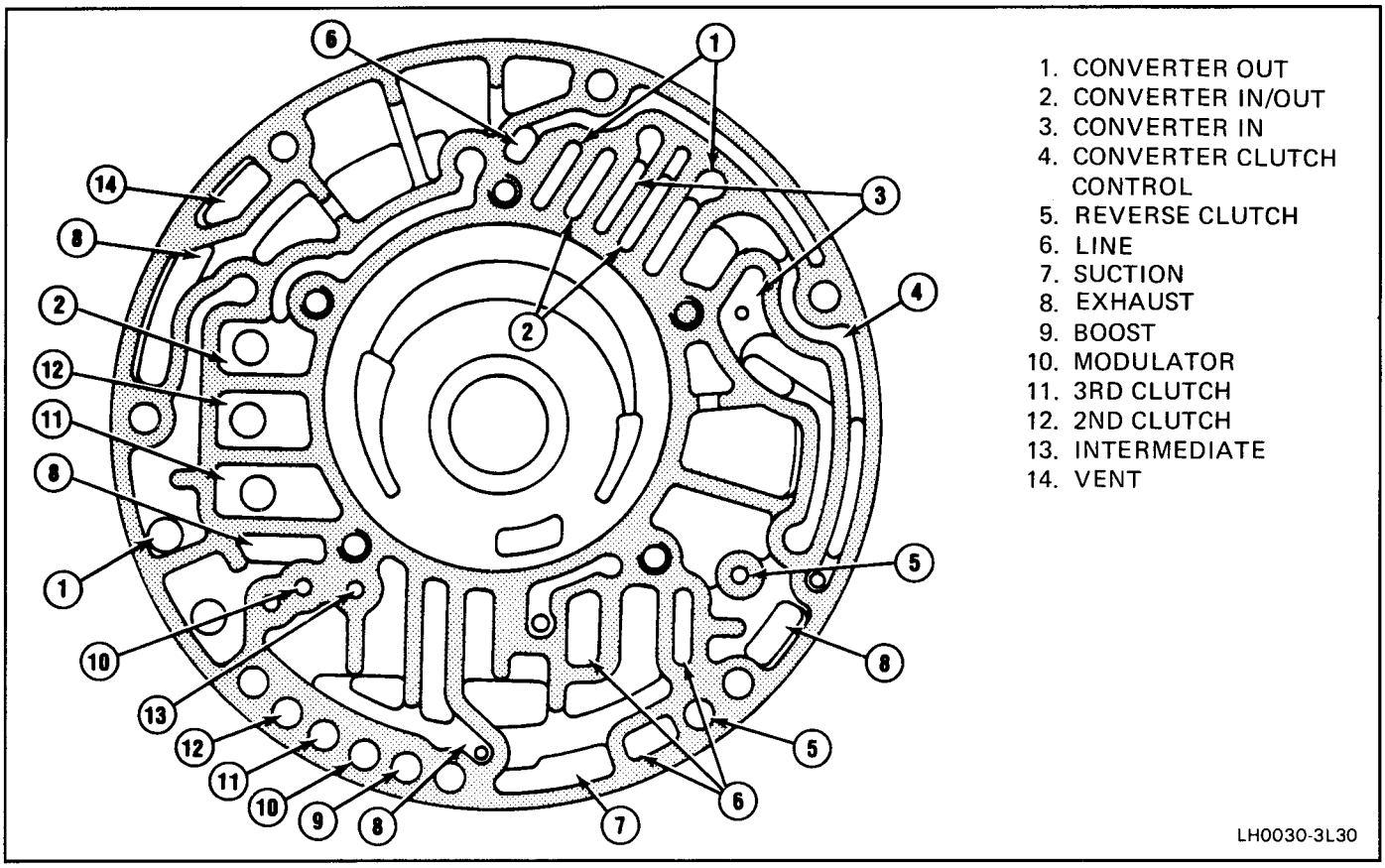

Figure 28 Pump Passages

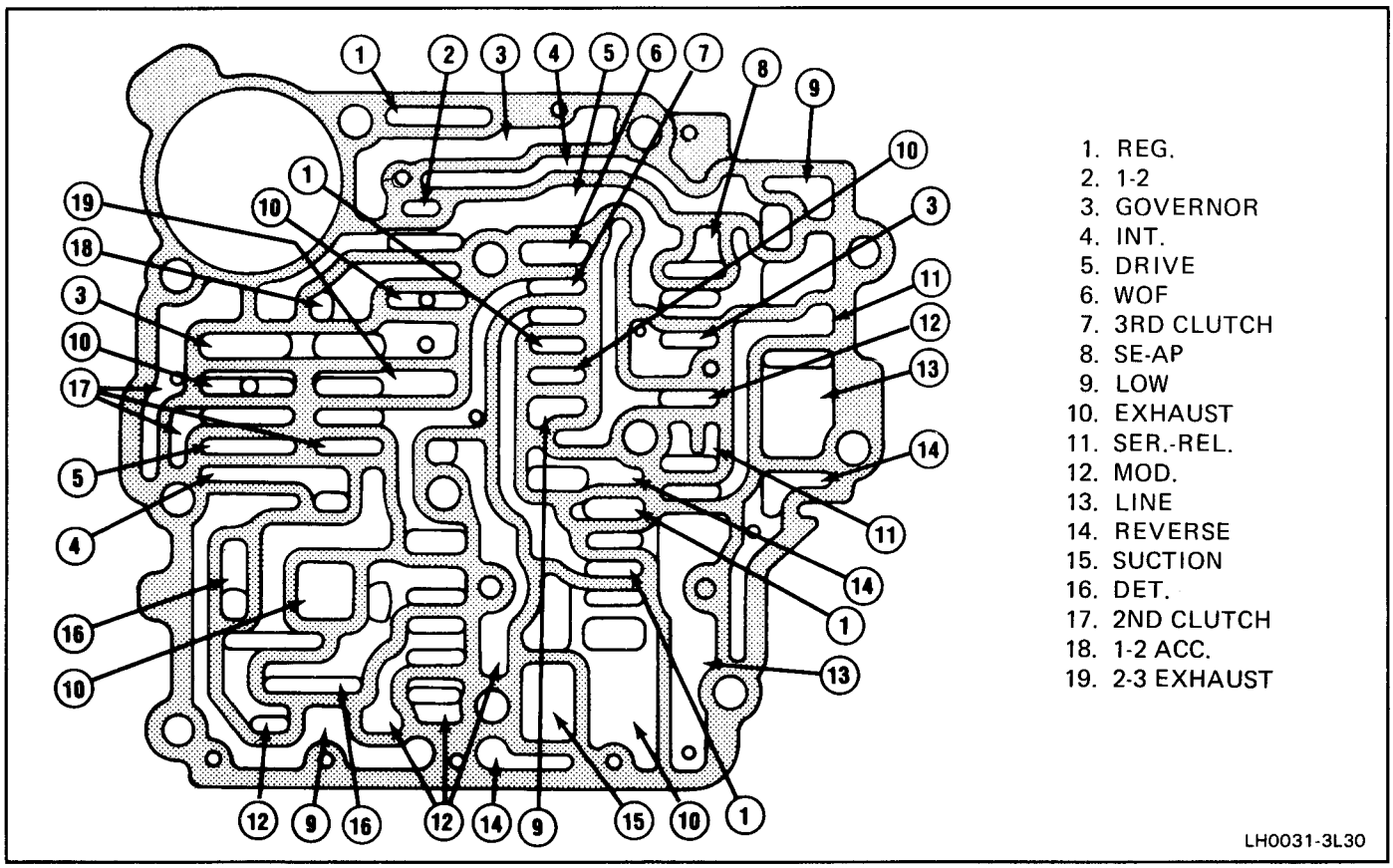

Figure 29 Valve Body Passages

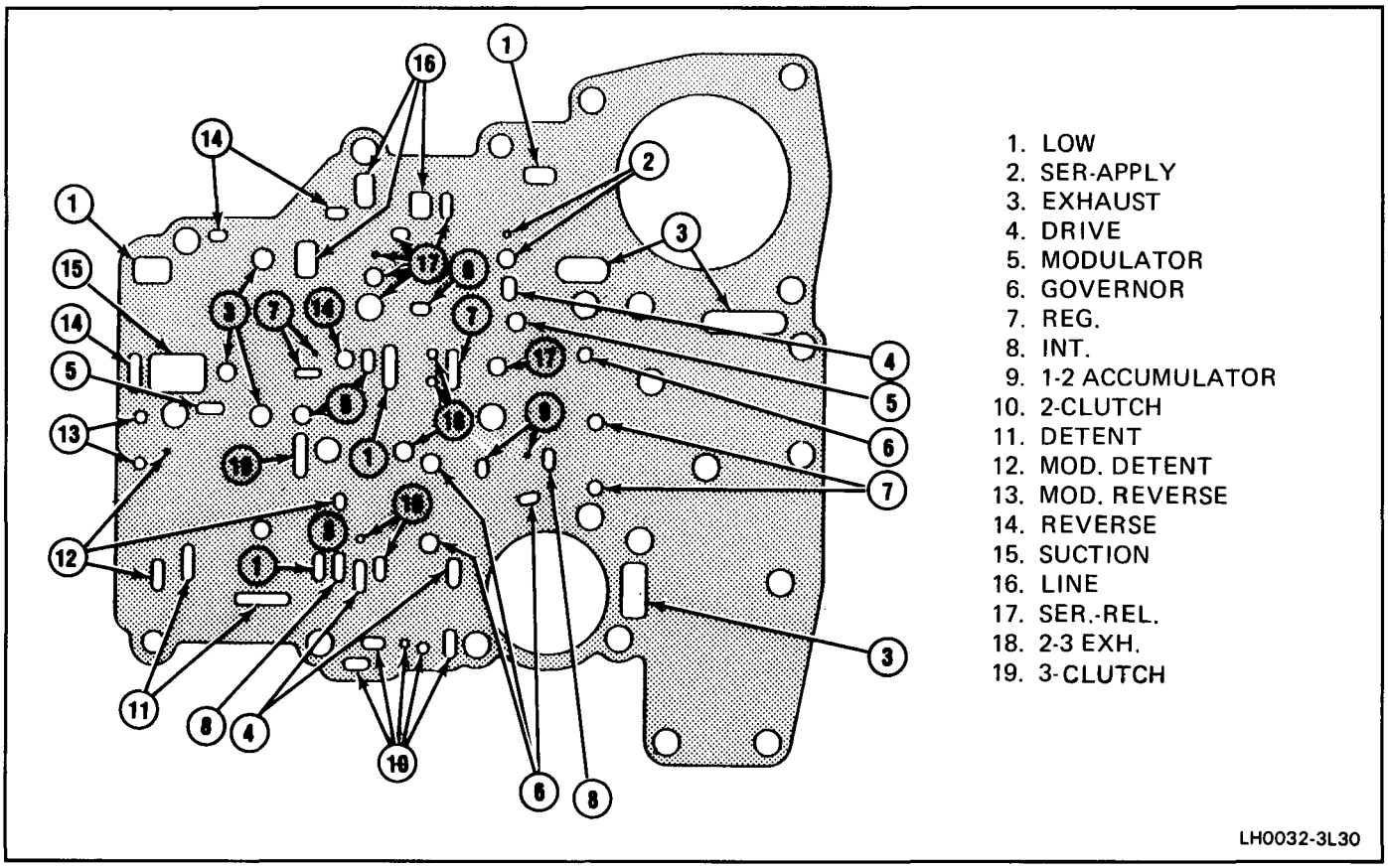

Figure 30 Valve Body Transfer Plate Passages

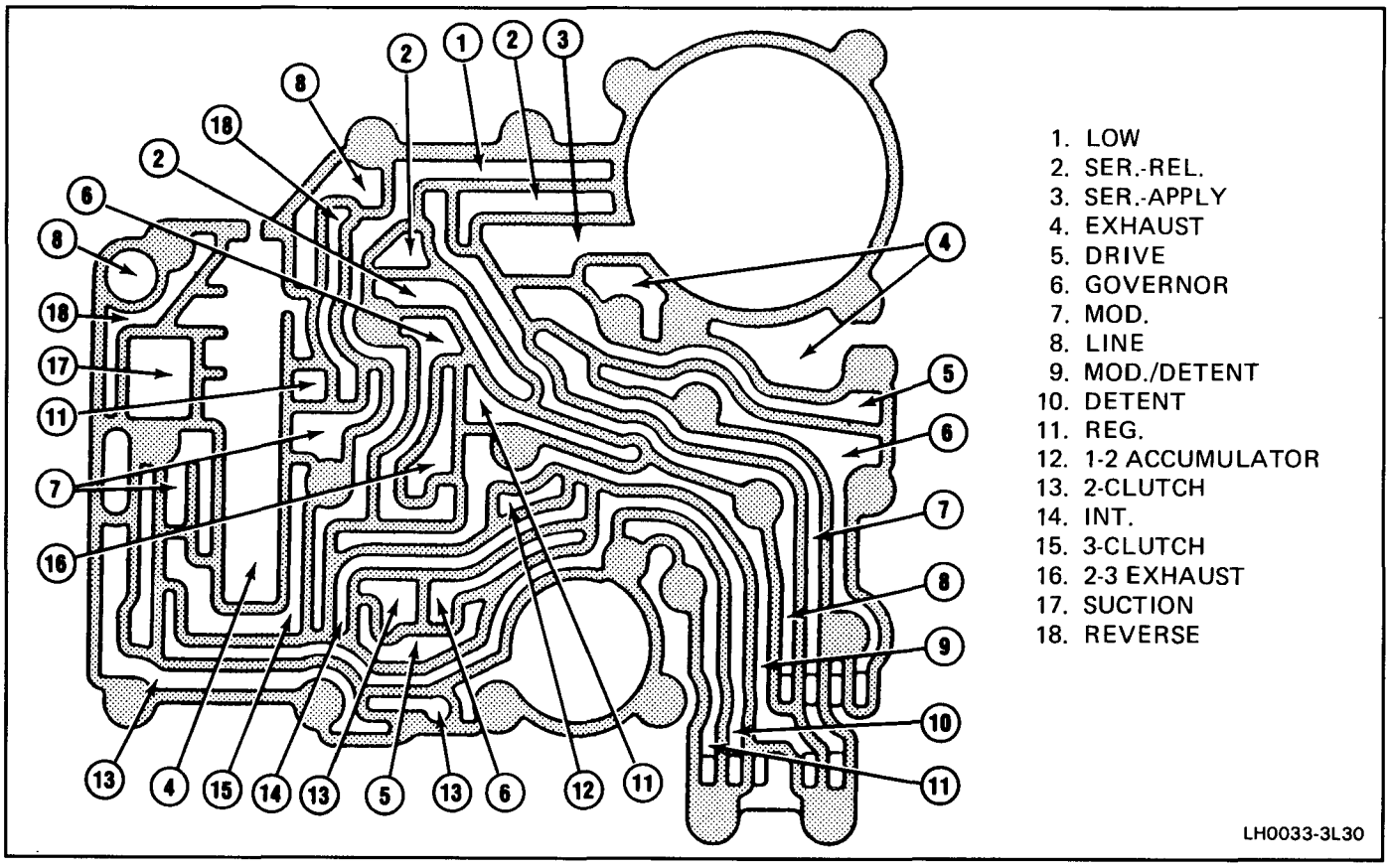

Figure 31 Case Passages

SECTION 7A-11B
HYDRA-MATIC 3L30
AUTOMATIC TRANSMISSION UNIT REPAIR
RPO MD2

NOTICE: When fasteners are removed, always reinstall them at the same location from which they were removed. If a fastener needs to be replaced, use the correct part number fastener for that application. If the correct part number is not available, a fastener of equal size and strength (or stronger) may be used. Fasteners that are not reused, and those requiring thread locking compound will be called out. The correct torque value must be used when installing fasteners that require it. If the above conditions are not followed, parts or system damage could result:

CONTENTS

Transmission Disassembly 7A-11B-1
General Service Information 7A-11B-1
External Parts 7A-11B-2
Servo Piston Removal 7A-11B-3
Modulator and Detent Valve Assemblies 7A-11B-3
Extension Housing, Speedometer Driven Gear and Governor Assembly 7A-11B-4
Internal Parts 7A-11B-5
Selector Lever and Electrical Connector Removal 7A-11B-6
Component Repair and Transmission Assembly Case 7A-11B-7
Case Interior 7A-11B-8
Selector Lever and Shaft 7A-11B-8
Planetary Carrier 7A-11B-9
Third Clutch Assembly 7A-11B-9
Sprag Unit 7A-11B-11
Third Clutch and Sprag Unit 7A-11B-12
Second Clutch 7A-11B-13
Reverse Clutch Parts 7A-11B-15
Determining Selective Washer Thickness 7A-11B-16
Converter Housing, Pump Assembly and Reverse Clutch 7A-11B-17
Governor Hub 7A-11B-20
Governor Body and Speedometer Drive Gear 7A-11B-20
Extension Housing and Speedometer Drive Gear 7A-11B-22
Detent Valve and Modulator 7A-11B-22
Servo Piston 7A-11B-23
Control Valve Assembly 7A-11B-25
External Parts 7A-11B-27
Disassembled Views 7A-11B-29
Torque Specifications 7A-11B-38
Special Tools 7A-11B-39

TRANSMISSION DISASSEMBLY

GENERAL SERVICE INFORMATION

- Seal rings.
  - If any seal rings are damaged, cut, or do not rotate freely in their grooves, be certain to check the ring groove for debris, burrs, or damage.
- Thrust washer surfaces.
  - The thrust washers and bearing surfaces may appear to be polished. This is a normal condition and should not be considered damage.
- Snap rings.
  - Do not over expand snap rings when removing or installing.

EXTERNAL PARTS

Figures 1 and 2

Tools Required:

J 3289-20 Base

J 8763-01 Holding Fixture

Clean

- Thoroughly clean the exterior of the transmission.

Remove or Disconnect

Figure 1

- Torque converter.

Install or Connect

1. J 8763-01 onto transmission case.
2. Holding fixture into the base.
   - Do not over torque holding fixture screw.

Remove or Disconnect

Figure 1

1. Drain the transmission fluid through the rear extension.
2. Bolts, oil pan and gasket.
3. Bolts, oil filter and gasket.
4. Manual detent roller and spring assembly.
5. Electrical connections at the governor oil pressure switch, solenoid and case.
6. Solenoid from transfer plate reinforcement.
7. Solenoid from the solenoid pipes.
8. Solenoid pipes from the valve body and the case.
   - Check for proper fit.
   - Inspect seal O-ring on pipes.

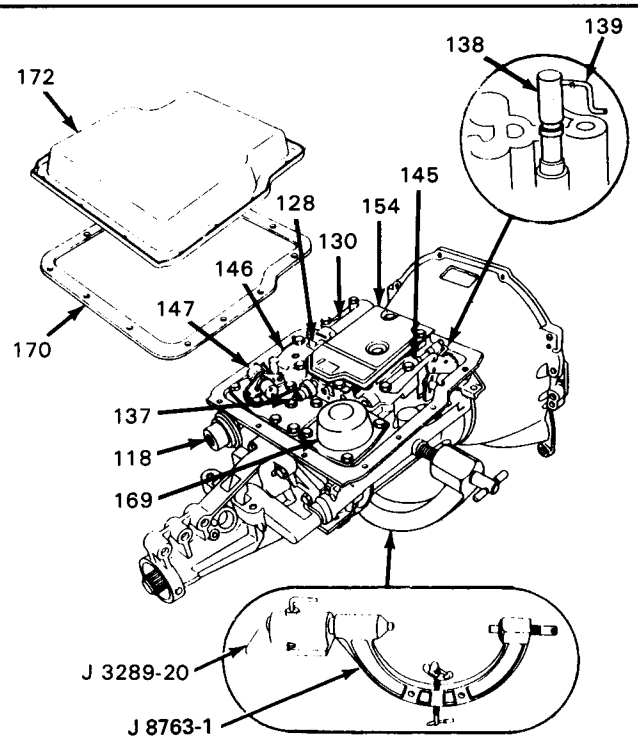

118 MODULATOR
128 VALVE BODY & ACCUMULATOR PISTON ASSEMBLY
130 PLATE, TRANSFER
137 SWITCH, OIL PRESSURE
138 VALVE, MANUAL
139 LINK, MANUAL VALVE
145 ROLLER, MANUAL DETENT
146 PLATE, REINFORCEMENT
147 SOLENOID & BRACKET ASSEMBLY
154 SCREEN, OIL PUMP
169 COVER, SERVO PISTON
170 GASKET, OIL PAN
172 PAN, OIL

PH0034-3L30

Figure 1 Disassembled View – External Parts

Remove or Disconnect

Figure 2

1. Governor pressure switch using a 1-1/16 in. pressure switch socket.
2. Bolts, transfer plate reinforcement.
3. Bolts, servo cover and gasket.
4. Bolts, valve body and manual valve link.
5. Checkballs.

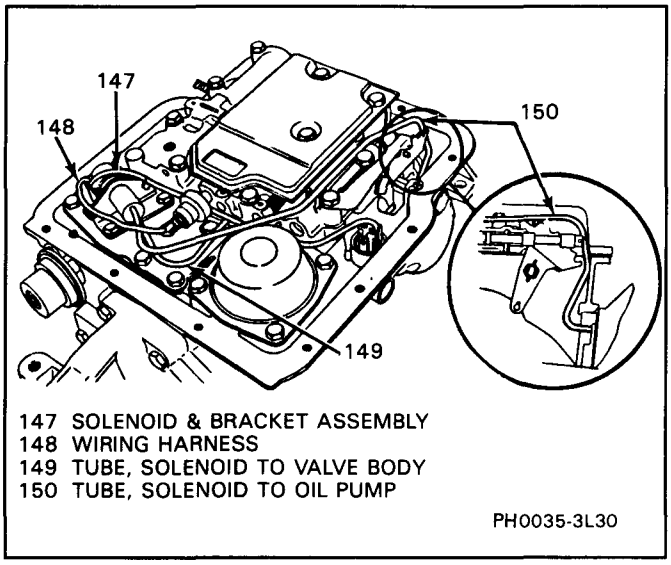

Figure 2 Disconnection of Solenoid Pipes and Electrical Wires

Servo Piston Removal

Figures 3 and 4

Tool Required:

J 23075 Servo/3rd Clutch Piston Spring Compressor

Remove or Disconnect

1. Install J 23075 with tool offset to the rear case.
   - Loosen the compression screw to receive servo spring tension.
2. Compress servo piston.
3. Servo piston retainer ring.
4. Slowly release servo piston.
5. Remove J 23075, servo piston, return spring and the servo apply rod.

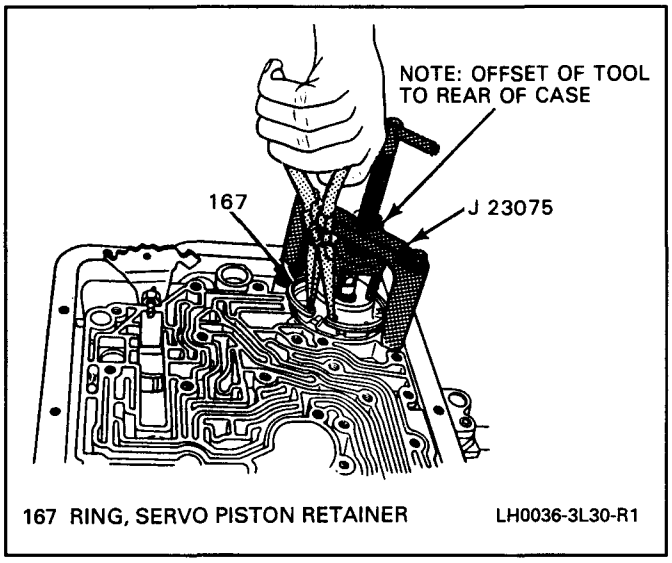

Figure 3 Compressing the Servo Piston

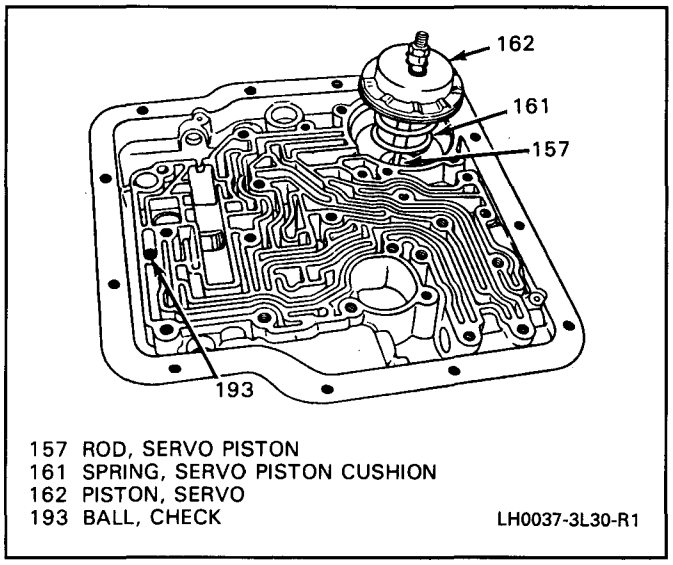

Figure 4 Checkball and Servo Piston

Modulator and Detent Valve Assemblies

Figures 5 and 6

Tool Required:

J 23100 Vacuum Modulator Wrench

Remove or Disconnect

NOTICE: Use of another tool to remove the vacuum modulator may result in internal damage to the modulator.

1. Vacuum modulator, O-ring and modulator plunger.
2. Modulator valve and sleeve.
3. Detent valve retaining pin using diagonal pliers. Insert a wire in the center of the spring pin to prevent it from collapsing during removal.
4. Detent sleeve, valve and spring.
5. O-ring.

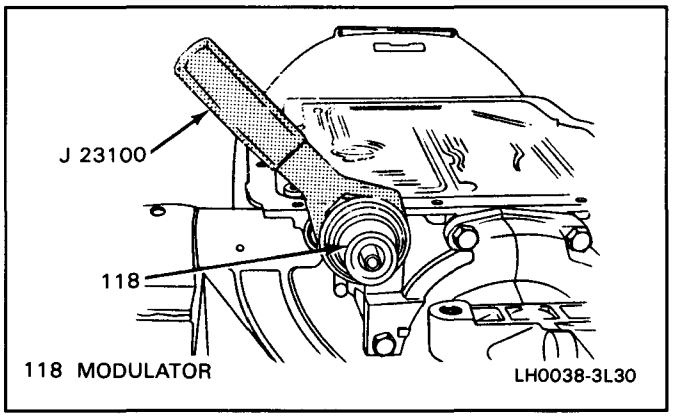

Figure 5 Vacuum Modulator

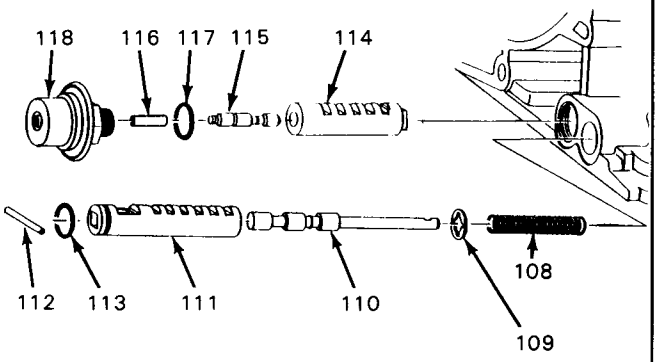

108 SPRING, DETENT VALVE
109 SEAT, SPRING DETENT VALVE
110 VALVE, DETENT
111 SLEEVE, DETENT VALVE
112 PIN, DETENT VALVE
113 SEAL, DETENT VALVE SLEEVE
114 SLEEVE, MODULATOR VALVE
115 VALVE, MODULATOR
116 PLUNGER, MODULATOR
117 SEAL RING, MODULATOR
118 MODULATOR

PH0039-3L30

Figure 6 Detent Valve and Modulator Valve

Extension Housing, Speedometer, Driven Gear and Governor Assembly

Figures 7, 8, 9 and 10

Tools Required:

J 7004 Slide Hammer

J 23129 Converter Housing Seal Remover

Remove or Disconnect

1. Bolt and speedometer guide bracket.
2. Speedometer driven gear assembly and seal ring.
3. Extension housing seal using J 23129 and J 7004 if necessary.
4. Bolts, extension housing and gasket.
5. Parking pawl and spring.
6. Snap ring on output shaft.
7. Speedometer drive gear and retaining clip.
8. Bolts, governor body and gasket.
9. Governor hub snap ring, governor hub and governor hub oil screen.

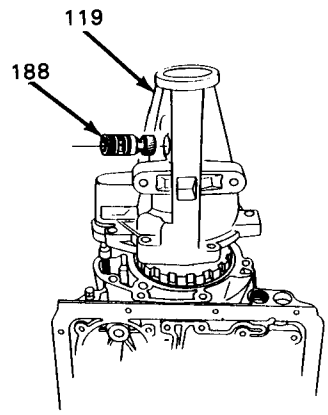

119 EXTENSION HOUSING
188 GEAR, SPEEDOMETER DRIVEN

LH0040-3L30

Figure 7 Extension Housing and Speedometer Drive Gear

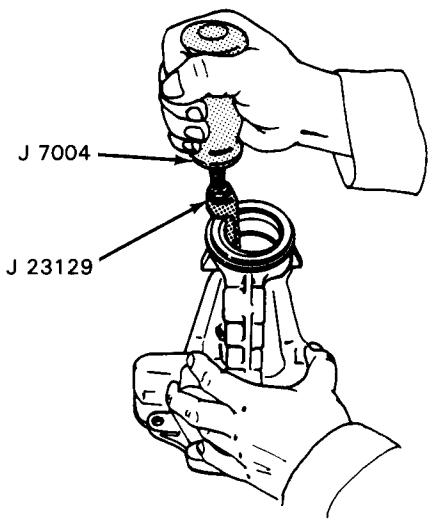

LH0041-3L30

Figure 8 Removing Extension Housing Oil Seal

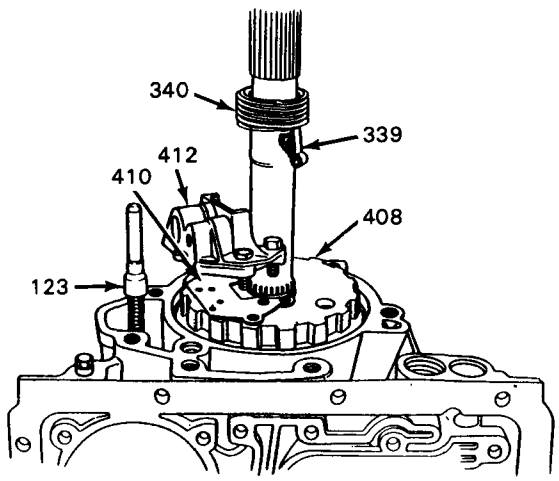

123 ACTUATOR, PARKING LOCK PAWL
339 CLIP, SPEEDO DRIVE GEAR
340 GEAR, SPEEDO DRIVE
408 HUB, GOVERNOR
410 GASKET, GOVERNOR
412 BODY, GOVERNOR

PH0042-3L30

Figure 9 Speedometer Drive Gear and Governor

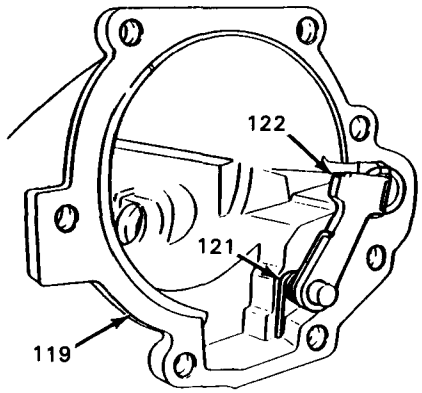

119 EXTENSION HOUSING
121 SPRING, PARKING LOCK PAWL
122 PAWL, PARKING LOCK

LH0043-3L30

Figure 10 Extension Housing and Parking Pawl

INTERNAL PARTS

Figures 11 through 14

Tools Required:

J 7004 Slide Hammer

J 23129 Converter Housing Seal Remover

Remove or Disconnect

Figures 11, 12 and 13

1. Converter housing oil seal using J 7004 and J 23129, if necessary.
2. Seven outer bolts.
3. Loosen five inner bolts.
4. O-ring from input shaft.

CAUTION: If the O-ring is not removed, the second clutch assembly and the third clutch assembly will come out with the converter housing. The O-ring may shear while the parts are being held, allowing the second and the third speed clutches to fall, causing personal injury.

5. Converter housing with the pump assembly and reverse clutch assembly.
6. Selective washer.

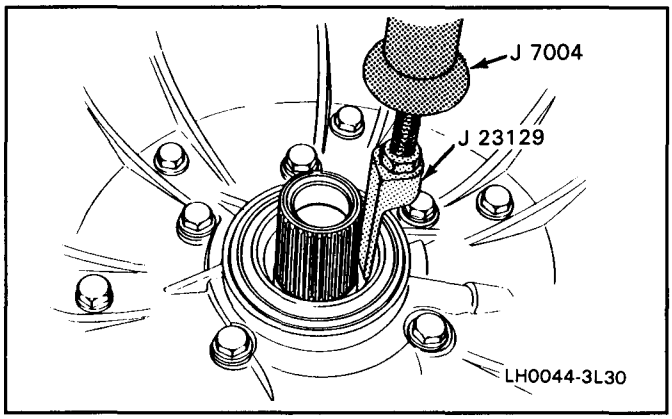

Figure 11 Removing Converter Housing Oil Seal

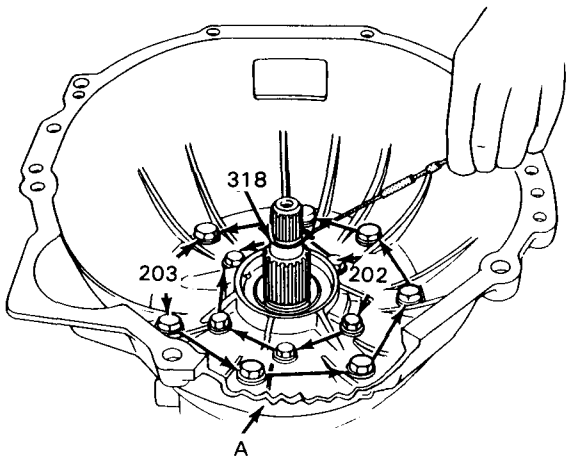

A CUT-AWAY VIEW CONVERTER HOUSING
202 BOLT, CONVERTER HOUSING TO OIL PUMP
203 BOLT, CONVERTER HOUSING TO CASE
318 O-RING

LH0045-3L30

Figure 12 Converter Housing Attaching Bolts and O-Ring Seal

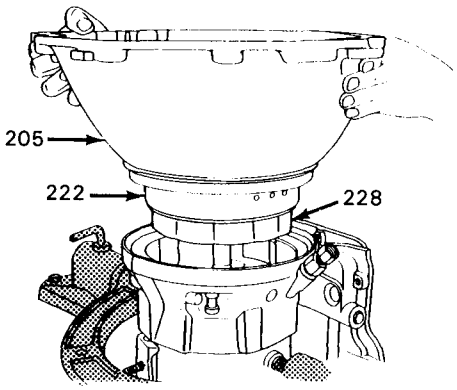

205 HOUSING, CONVERTER
222 BODY, OIL PUMP
228 PISTON, REVERSE CLUTCH

LH0046-3L30

Figure 13 Removing Converter Housing

Remove or Disconnect

Figure 14

1. Second and third clutch assemblies.
2. Separate the second clutch and the third clutch assemblies.

NOTICE: If the reverse clutch plates are not being replaced, they must be installed in their original position.

3. Reverse clutch plates and aluminum pressure plate.
4. Bearing assembly, thrust washer and planetary carrier assembly.
5. Bearing assembly and thrust washer located in case or bottom of planetary carrier assembly.

Remove or Disconnect

1. Reaction sun gear and drum.
2. Bearing assembly and thrust washer.
3. Low band.
   - Note location.
4. Case vent, if necessary. If case vent is removed install a new vent.

Inspect

- Low band for:
  - Cracks.
  - Flaking.
  - Heat damage.
- Reaction sun gear and drum for:
  - Chipped teeth.
  - Worn bushing.
  - Scored drum.
- Reverse clutch plates:
  - Composition plates for damaged tangs, delamination or excessive wear.
  - Steel plates for worn lugs or heat damage.

Selector Lever and Electrical Connector Removal

Figures 15 and 16

Remove or Disconnect

1. Inner selector hex nut.
2. Inside range selector and parking lock actuator rod.
3. Range selector shaft spring pin, using diagonal pliers. Insert a wire in the center of the spring pin to prevent it from collapsing during removal.

NOTICE: Inspect the range shaft for burrs before removing shaft to prevent damage to the case.

4. Range selector shaft.
5. Selector shaft seal, if necessary.
6. Electrical connector and O-ring if necessary.

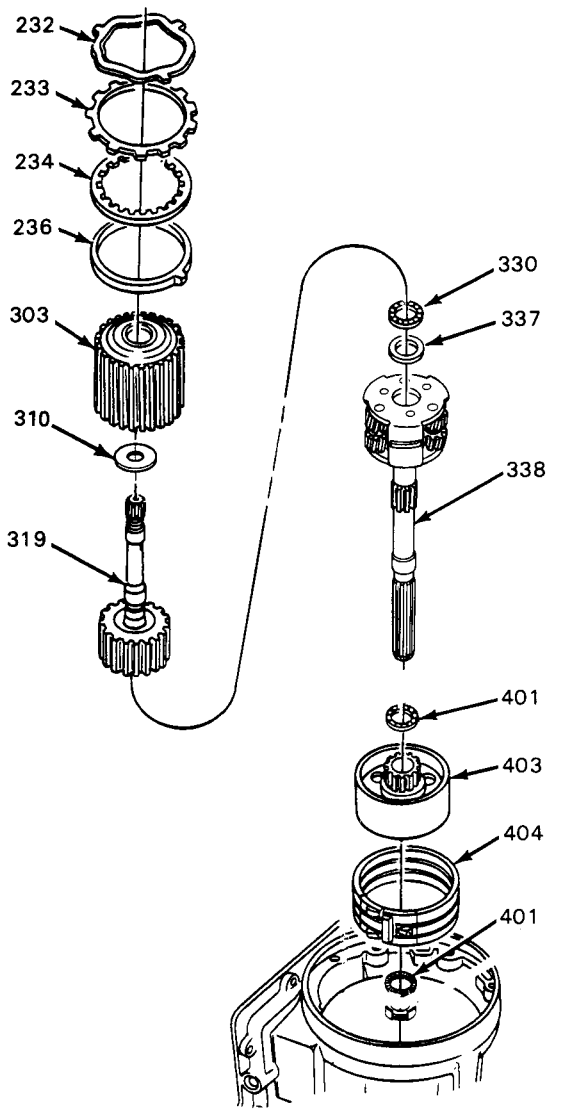

232 PLATE, REVERSE CLUTCH CUSHION
233 PLATE, REVERSE CLUTCH (FLAT STEEL)
234 PLATE, REVERSE CLUTCH (LINED)
236 PLATE, REVERSE CLUTCH PRESSURE
303 DRUM, 2ND CLUTCH
310 WASHER, THRUST 2ND TO 3RD CLUTCH
319 SHAFT, INPUT
330 BEARING, INPUT SUN GEAR
337 WASHER, INPUT GEAR TO CARRIER
338 PLANETARY CARRIER ASSEMBLY
401 BEARING, REACTION SUN GEAR
403 DRUM AND GEAR REACTION SUN ASM.
404 BAND, BRAKE

PH0047-3L30 F

Figure 14 Internal Parts

101 CASE, TRANSMISSION
140 LEVER, PARKING LOCK AND RANGE SELECTOR
141 SHAFT, SELECTOR
144 NUT, SELECTOR SHAFT

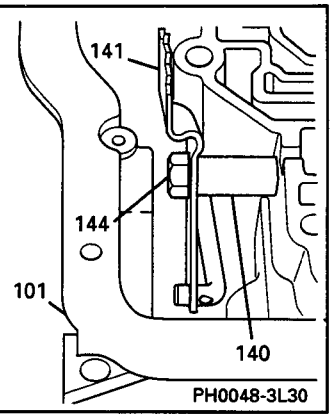

Figure 15 Selector Lever

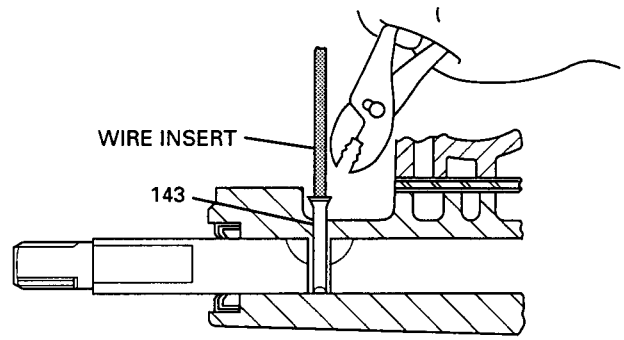

143 PIN, SELECTOR SHAFT

PH0049-3L30

Figure 16 Removing Spring Pin

COMPONENT REPAIR AND TRANSMISSION ASSEMBLY

The assembly for some components will require use of an assembly lube. It is recommended the TRANSJEL™ J 36850 or equivalent be used during assembly.

NOTICE: Do not use any type of grease to retain parts during assembly of this unit. Greases other than the recommended assembly lube will change transmission fluid characteristics and cause undesirable shift conditions and/or filter clogging.

When assembling the transmission, do not use any O-rings, gaskets, or oil seals that have been removed.

Case

Inspect

- Case exterior for cracks or porosity.
- Case to valve body face for damage.
- Interconnected fluid passages for damage.
- Servo bore for:
  - Sharp edges.
  - Porosity.

- All bolt holes for thread damage:
  - Heli-coil to repair.
- Cooler conditions for:
  - Proper torque 38 N•m (28 lb. ft.)

Case Interior

Inspect

- Ring grooves for damage.
- Clutch plate lugs for wear or damage.
- Band retaining pins for good retention.
- Detent bore for scoring or scratches.
- Modulator bore for scoring or scratches.

Selector Lever and Shaft

Figures 14, 17, 18 and 19

Install or Connect

Figures 17, 18 and 19

1. Selector seal, if necessary.
2. Selector shaft.
   - Identification groove must be on the outside.
3. Spring pin. Check the selector lever shaft for free movement.
4. Inside selector lever and parking pawl actuator assembly.
5. Inside selector lever.
6. Electrical connector with a new O-ring if necessary.

Install or Connect

Figure 14

1. Thrust washer and bearing.
   - The case bushing acts as a guide for the thrust washer and the bearing.
2. Band.
3. Reaction sun gear and drum assembly.
4. Bearing and thrust washer.
   - Retain with TRANSJEL™ J 36850 or equivalent.

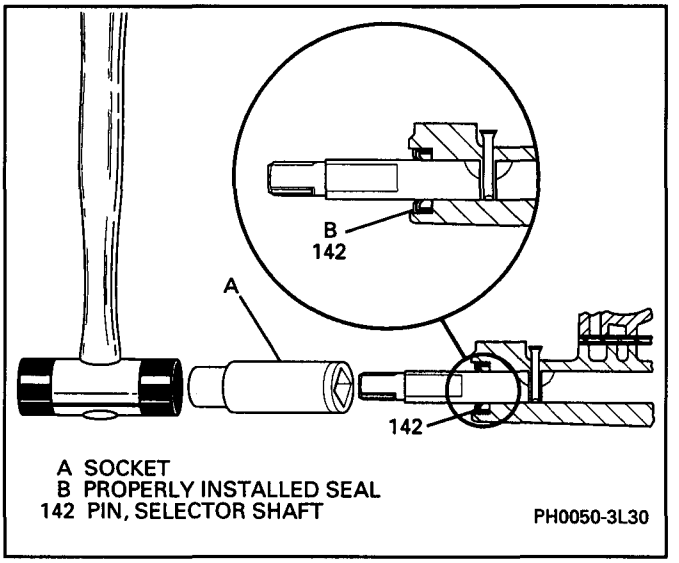

Figure 17 Selector Lever Shaft Seal Installation

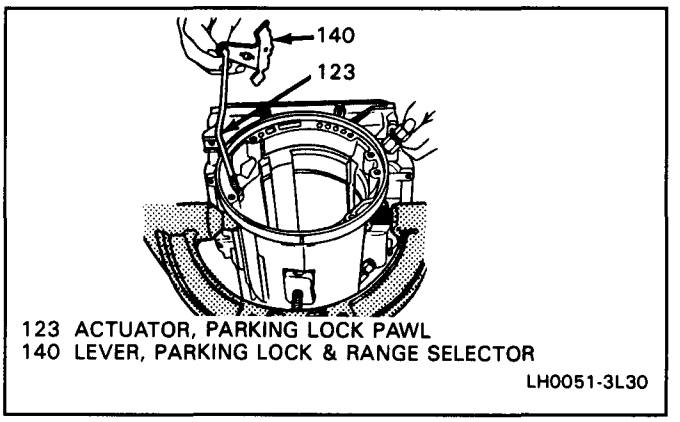

Figure 18 Installing Selector Lever

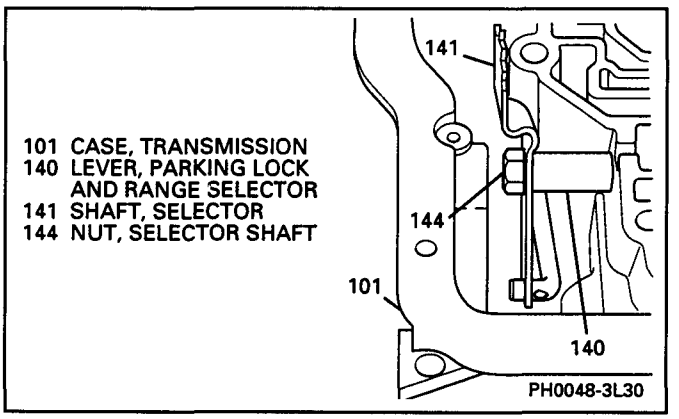

Figure 19 Selector Lever Installed

Planetary Carrier

Figures 20 and 21

Inspect

Figure 20

- Planetary carrier and output shaft for:
  - Damage.
  - Distortion.
- Planetary pinions for:
  - Damage.
  - Chipped teeth.

Measure

- Pinion clearance at points A and B with a feeler gage. Clearance should be 0.127 to 0.889 mm (0.005 to 0.035 inch).

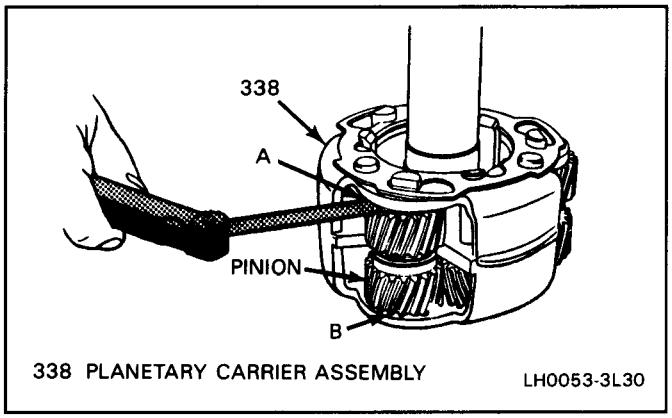

Figure 20 Planetary Carrier and Pinion Clearance

Install or Connect

Figure 21

1. Planetary carrier and output shaft assembly.
2. Bearing.
   - Use TRANSJEL™ J 36850 or equivalent to hold the bearing in place.

Third Clutch Assembly

Figures 22 through 28

Tools Required:

J 38450 Third Clutch Sprag Retaining Ring Tool

J 23075 Servo/Third Clutch Piston Spring Compressor

J 23084 Third Clutch Seal Protector

Disassemble

Figures 22, 23 and 24

1. Place the third clutch housing and intermediate shaft assembly upright using a soft jawed vise as a support.
2. Locate the end of the sprag retaining ring. Compress near the end using a screwdriver through the side slot and slide one tool blade between ring and housing to hold the ring clear of the groove.
3. Repeat with a second tool blade near the other end of the retaining ring.
4. Repeat with a third tool blade opposite the first two.
5. Repeat with two further blades equally spaced.
6. Pull the input sun gear assembly until the sprag retaining ring clears and ring groove.
7. Remove the tool blades.
8. Sprag race assembly from third clutch drum assembly.
9. Bearing.
10. Clutch plates.

NOTICE: If the third clutch plates are not being replaced, they must be installed in their original position.

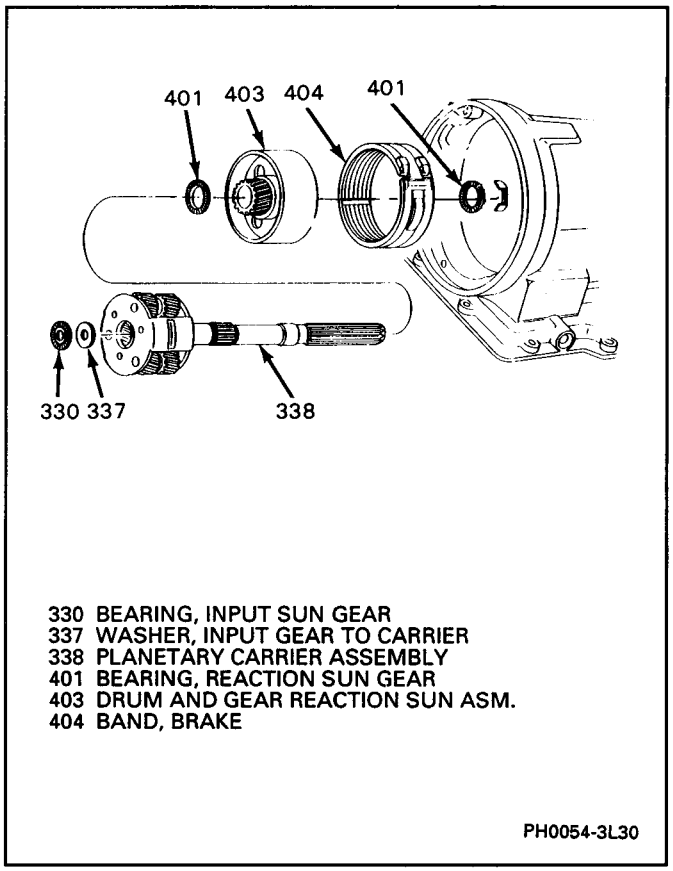

Figure 21 Installing Planetary Carrier

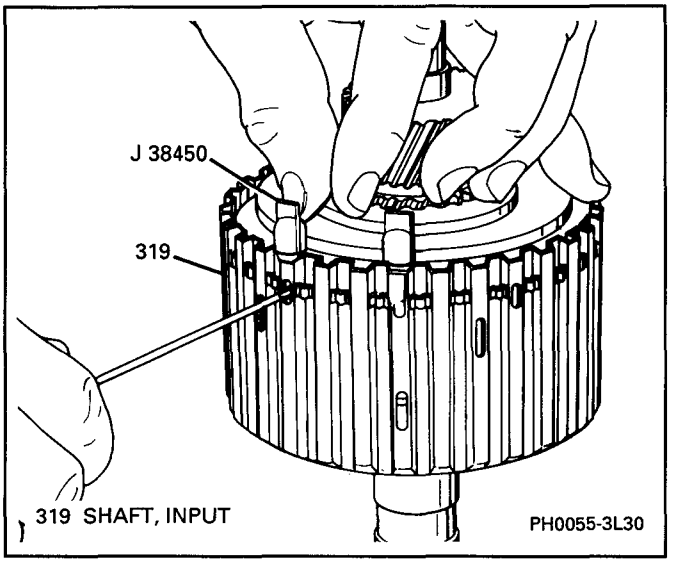

Figure 22 Compressing Snap Ring

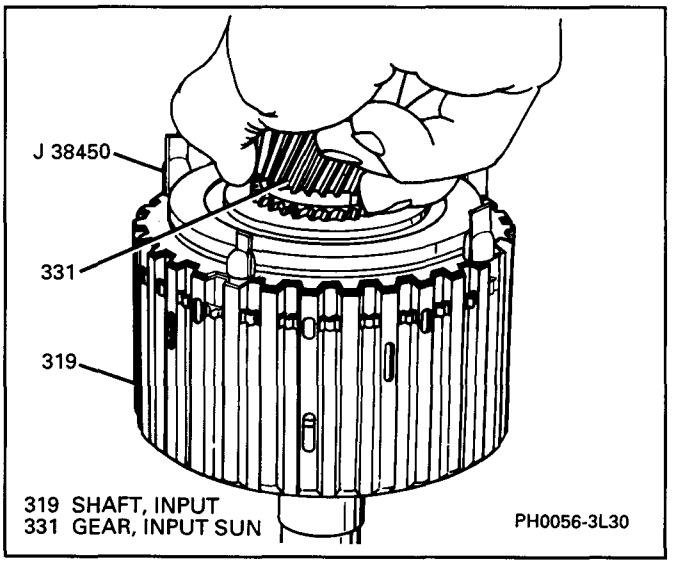

Figure 23 Removing Sprag Assembly

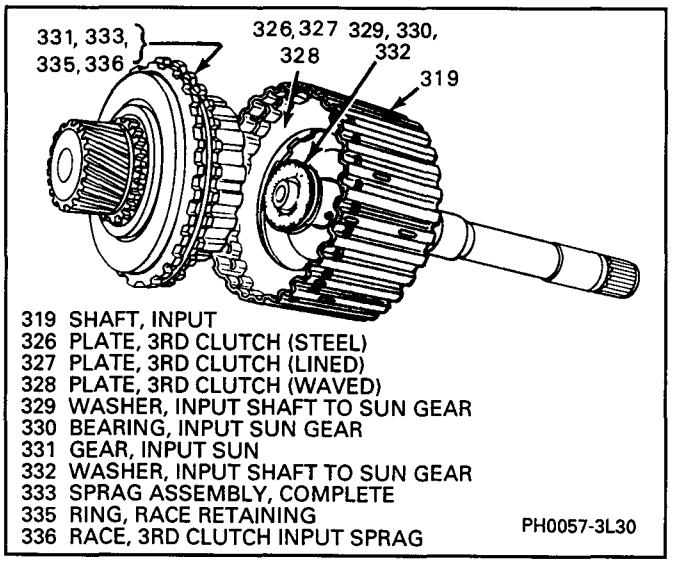

Figure 24 Sprag Assembly and Third Clutch Assembly

Disassemble

Figures 25 and 26

1. Position third clutch and input shaft assembly in a press with the input shaft facing down.
2. Compress third clutch piston using J 23075.

   NOTICE: Do not overstress the springs and seat. This will cause damage to the spring seat.
3. Spring seat snap ring.
4. Release the clutch piston.
   DO NOT LET THE SPRING SEAT CATCH IN THE RING GROOVE.
5. Remove tool.
6. Spring seat and return springs.
7. Clutch piston.

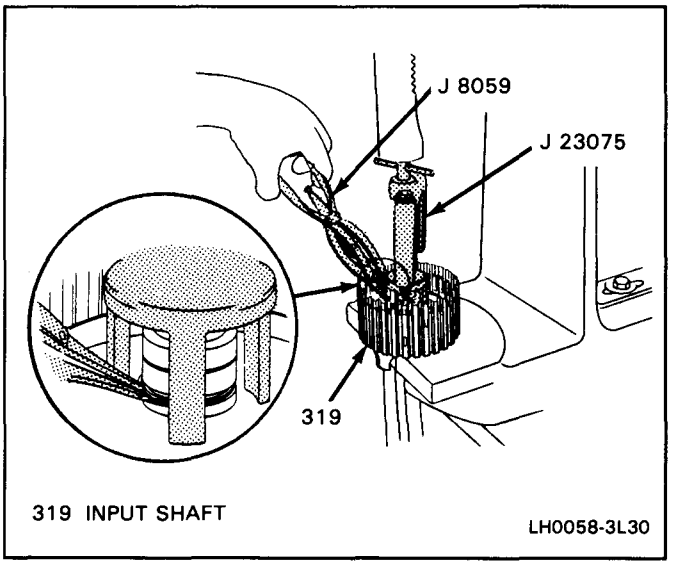

Figure 25 Removing or Installing Third Clutch Piston

Inspect

Figure 26

- Third clutch piston checkball.
  - A. Shake the piston and listen for checkball movement.
  - B. Replace the piston if checkball is missing or falls out.
- Clutch piston lip seal for nicks, cuts, or damage.
- Input shaft lip seal for nicks, cuts, or damage.
- Clutch plates
  - Composite plates for damaged tangs, delamination or excessive wear.
  - Steel plates for damaged lugs, or heat damage.
- Third clutch drum for damage or worn clutch splines.
- Thrust washer and bearing for damage.

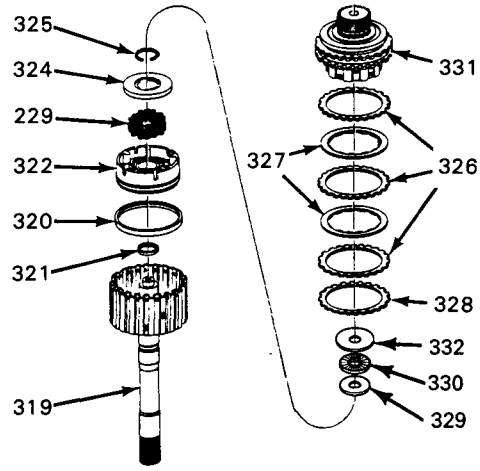

229 SPRING, CLUTCH PISTON RETURN
319 SHAFT, INPUT
320 SEAL, 3RD CLUTCH PISTON (OUTER)
321 SEAL, 3RD CLUTCH PISTON (INNER)
322 PISTON, 3RD CLUTCH
324 SEAT, 3RD CLUTCH PISTON SPRING RETAINER
325 RING, CLUTCH PISTON SPRING SEAT RETAINER
326 PLATE, 3RD CLUTCH (STEEL)
327 PLATE, 3RD CLUTCH (LINED)
328 PLATE, 3RD CLUTCH (WAVED)
329 WASHER, INPUT SHAFT TO SUN GEAR
330 BEARING, INPUT SUN GEAR
331 GEAR, INPUT SUN
332 WASHER, INPUT SHAFT TO SUN GEAR

PH0059-3L30

Figure 26 Third Clutch

Assemble

Figures 25, 26, 27 and 28

1. Input shaft lip seal. Lip seal must point toward the input shaft. Lubricate the lip seal with DEXRON®-IIE transmission fluid.
2. Piston lip seal onto the piston as shown.
   - Lubricate the lip seal with DEXRON®-IIE transmission fluid. Use J 23084 to protect the seal during installing.
3. Piston into the clutch drum.
4. Remove J 23084.
5. Third clutch piston return spring.
6. Spring seat.
7. Position the third clutch and input shaft assembly in a press with the input shaft pointing down.
8. Compress the piston return springs using J 23075.

NOTICE: Do not overstress the springs and seat. This will cause damage to the spring seat.

9. Spring seat snap ring.
10. Remove J 23075.

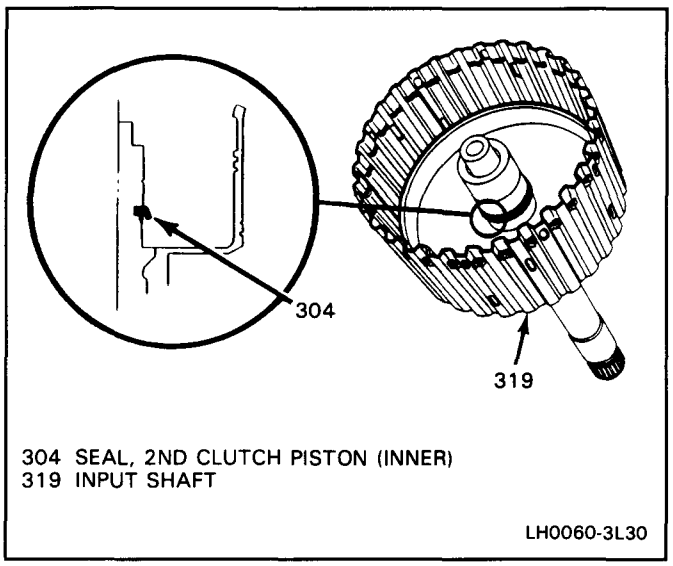

304 SEAL, 2ND CLUTCH PISTON (INNER)
319 INPUT SHAFT

LH0060-3L30

Figure 27 Input Shaft Lip Seal

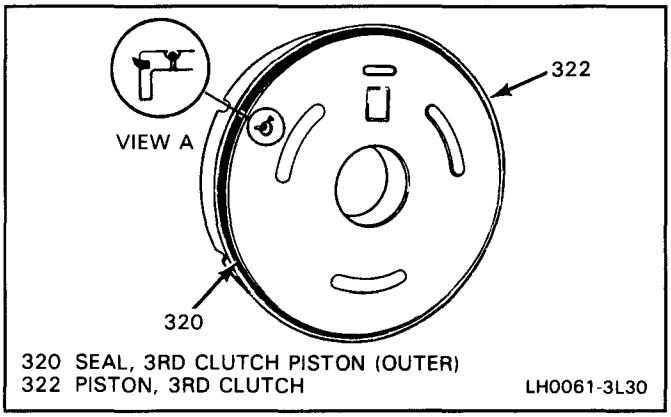

320 SEAL, 3RD CLUTCH PISTON (OUTER)
322 PISTON, 3RD CLUTCH

LH0061-3L30

Figure 28 Third Clutch Piston

Sprag Unit

Figures 29 and 30

Disassemble

Figure 29

1. Sprag assembly from the third speed clutch sun gear.
2. Sprag cage and retaining washers from the outer sprag race.

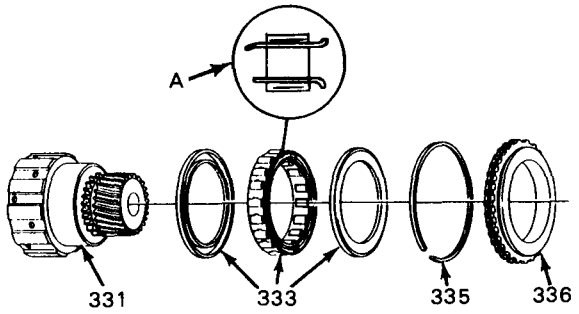

A FLARED SHOULDER PROPERLY INSTALLED
331 GEAR, INPUT SUN
333 SPRAG ASSEMBLY, COMPLETE
335 RING, RACE RETAINING
336 RACE, 3RD CLUTCH INPUT SPRAG

LH0062-3L30

Figure 29 Sprag Assembly

Inspect

Figures 29 and 30

- Sun gear for nicked or chipped teeth.
- Sun gear sprag surface for pitting or damage.
- Outer sprag race for pitting or heat damage.
- Retaining ring damage.

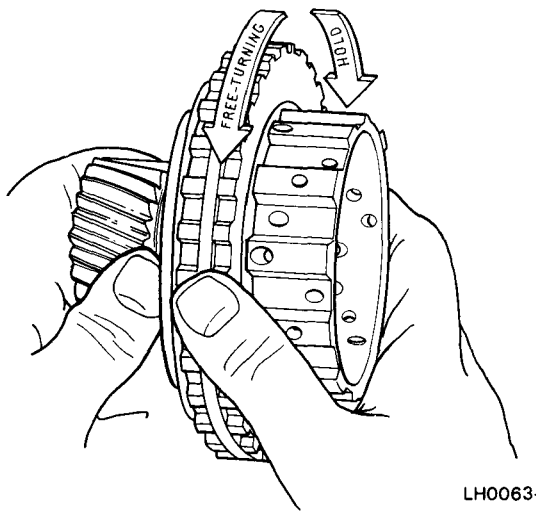

LH0063-3L30

Figure 30 Testing Sprag Assembly

Assemble

Figure 29

1. Retaining rings and sprag cage onto the sun gear. Flared shoulder of the sprag cage faces the sun gear.

Important

- This procedure must be followed exactly to be sure that the sprag assembly is installed properly.

2. Outer sprag race over the sprag cage.
   - Hold the sun gear with your left hand. The sprag and retainer assembly should hold firmly when turned in a clockwise direction with your right hand.
   - The sprag race and retainer assembly should rotate freely when turned in a counterclockwise direction with your right hand.

Third Clutch and Sprag Unit

Figures 31 and 32

Tool Required:

J 38450 Third Clutch Sprag Retaining Ring Tool

Assemble

1. Place third clutch housing and intermediate shaft assembly upright using a soft jawed vise as a support.
2. Third clutch spring cushion plate, bevel face down.
3. Third clutch plates into clutch housing. Starting with the steel clutch plate and alternate with lined plates.
4. Thrust washer and bearing.
5. Align third clutch inner tangs.
6. Fully engage the sprag assembly hub splines into the third clutch inner tangs. Simultaneously rotate the outer sprag race to engage into the third clutch housing.
7. Install a tool blade at each extremity of the retaining ring (Figure 32).
8. Compress the retaining ring with a screwdriver opposite the tool blades while pushing down on the outer sprag race.
9. Engage retaining ring into groove.
10. Remove tool blades.

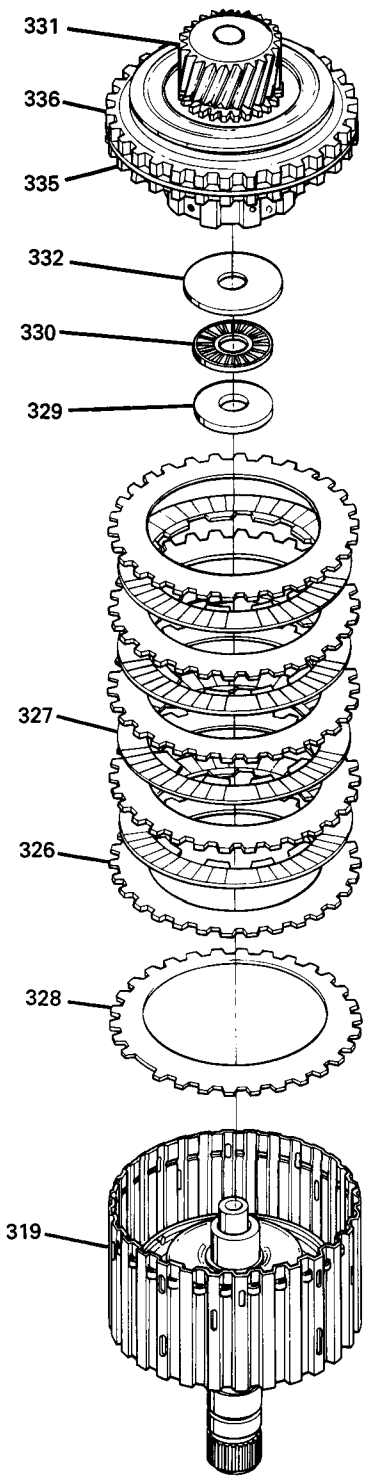

319 SHAFT, INPUT
326 PLATE, 3RD CLUTCH (STEEL)
327 PLATE, 3RD CLUTCH (LINED)
328 PLATE, 3RD CLUTCH (WAVED)
329 WASHER, INPUT SHAFT TO SUN GEAR
330 BEARING, INPUT SUN GEAR
331 GEAR, INPUT SUN
332 WASHER, INPUT SHAFT TO SUN GEAR
335 RING, RACE RETAINING
336 RACE, 3RD CLUTCH INPUT SPRAG

PH0064-3L30 F

Figure 31 Third Clutch and Sprag Assembly

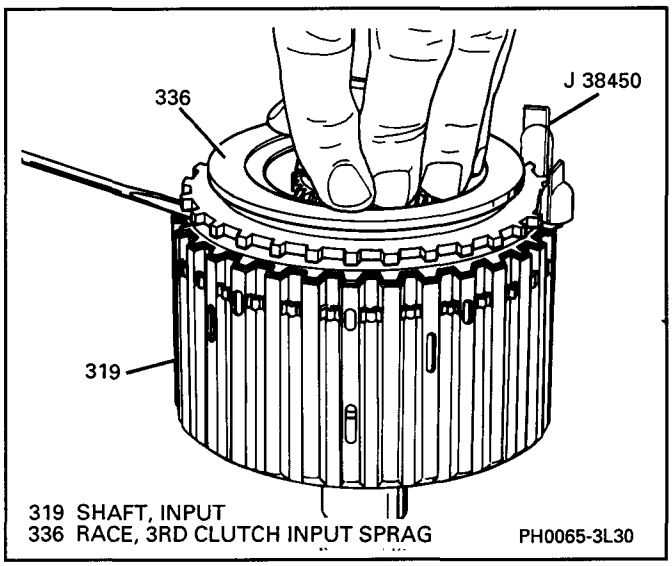

319 SHAFT, INPUT
336 RACE, 3RD CLUTCH INPUT SPRAG

PH0065-3L30

Figure 32 Third Clutch

Second Clutch

Figures 33 through 37

Tools Required:

J 23327 Clutch Spring Compressor

J 23080-A Second Clutch Piston Seal Installer

Disassemble

Figure 33

1. Retaining ring from the second clutch drum.
2. Ring gear, retaining ring and spacer.

NOTICE: If the second speed clutch plates are not being replaced, they must be installed in their original position.

3. Second clutch plates.
4. Thrust washer.

Disassemble

Figures 33, 34 and 35

1. Install J 23327.
2. Compress the piston return springs.
3. Retaining snap ring.
4. Clutch piston. Remove J 23327.
5. Spring seal and return springs.
6. Clutch piston.
7. Piston lip seal and the clutch drum lip seal if nicked, cut or damaged.

Inspect

- Second clutch piston.
  - Shake the piston and listen for checkball movement. Movement indicates proper checkball operation. Replace the piston if checkball is missing or falls out.
- Second clutch plates.
  - Composition clutch plates for damaged tangs or delamination.
  - Steel clutch plates for damaged tangs, wear, or heat damage.
- Clutch hub.
  - Bushing for scoring or damage.
  - Clutch splines for wear or damage.
  - Thrust washer for wear or damage.

Assemble

Figures 35 and 36

1. Clutch drum lip seal with the lip facing down, if necessary. Lubricate the lip seal with DEXRON®-IIE transmission fluid.
2. Outer piston lip seal with the lip facing down, if necessary. Lubricate the lip seal with DEXRON®-IIE transmission fluid.
3. Second clutch piston into the clutch drum. Lubricate the lip seals with liberal amounts of DEXRON®-IIE transmission fluid. Use J 23080-A to protect the outer piston lip seal.
4. Remove J 23080-A.

Assemble

Figure 34

1. Piston return springs and spring seat on the second clutch piston.
2. Use J 23327 to compress the second clutch piston return springs.
   DO NOT LET SPRING SEAT CATCH IN RING GROOVE.
3. Snap ring.
4. Remove J 23327.
5. Thrust washer. Seat the tang in the slot on the second clutch hub.
   - Retain washer with TRANSJEL™ J 36850 or equivalent.
6. Clutch plates into the second clutch drum in the following order:
   A. Waved plate.
   B. Steel plate.
   C. Composition plate.
   D. Steel plate.
7. Align the internal splines of the clutch plates.

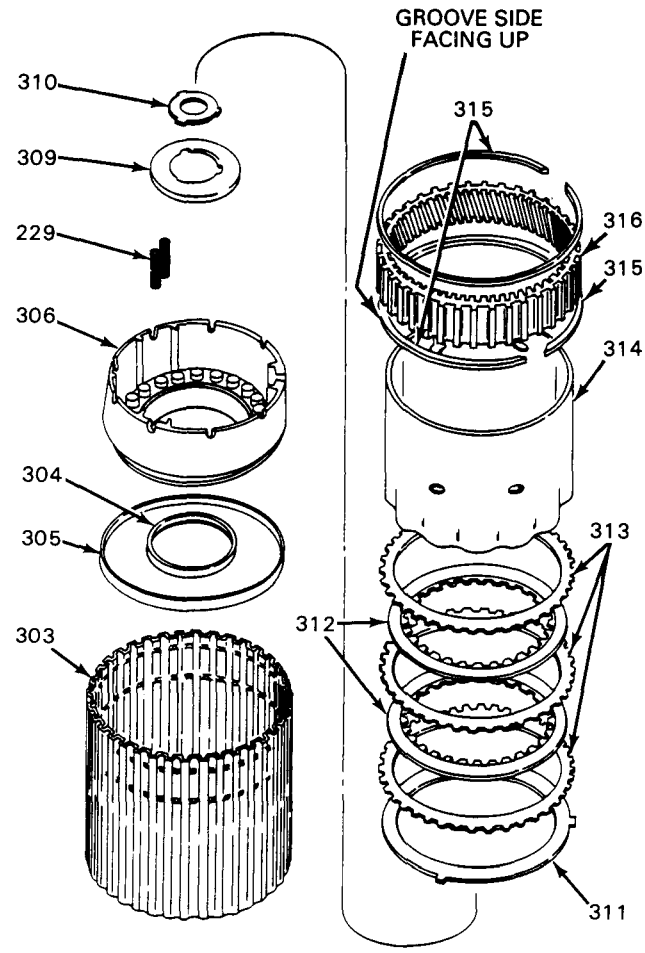

229 SPRING, CLUTCH PISTON RETURN
303 DRUM, 2ND CLUTCH
304 SEAL, 2ND CLUTCH PISTON (INNER)
305 SEAL, 2ND CLUTCH PISTON (OUTER)
306 PISTON, 2ND CLUTCH
309 RING, CLUTCH PISTON SPRING SEAT RETAINER
310 WASHER, 2ND TO 3RD CLUTCH THRUST
311 PLATE, 2ND CLUTCH (WAVED)
312 PLATE, 2ND CLUTCH (LINED)
313 PLATE, 2ND CLUTCH (STEEL)
314 SPACER, 2ND CLUTCH
315 RING, RING GEAR RETAINER
316 GEAR, RING

PH0066-3L30

Figure 33 Second Clutch

Assemble

Figure 33

1. Ring gear spacer.
   - Wavy end toward the clutch plates.
2. Spacer retaining ring.
3. Ring gear.
   - Grooved edge facing up.
4. Ring gear retaining ring.

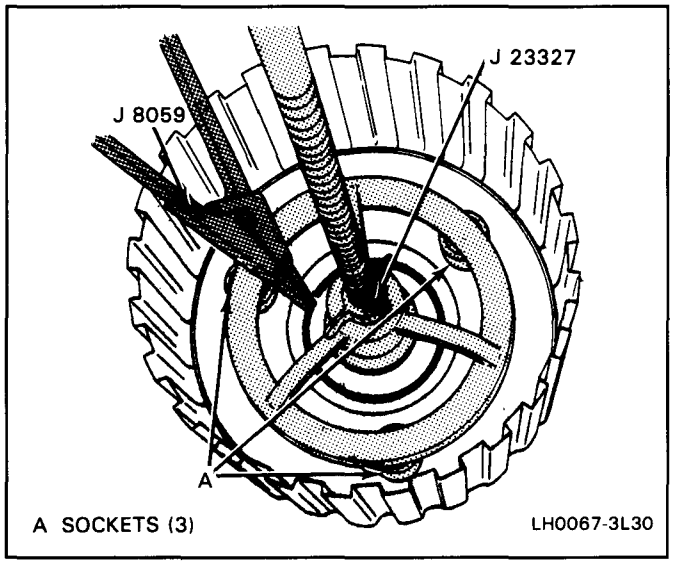

Figure 34 Removing Snap Ring From Second Clutch Piston

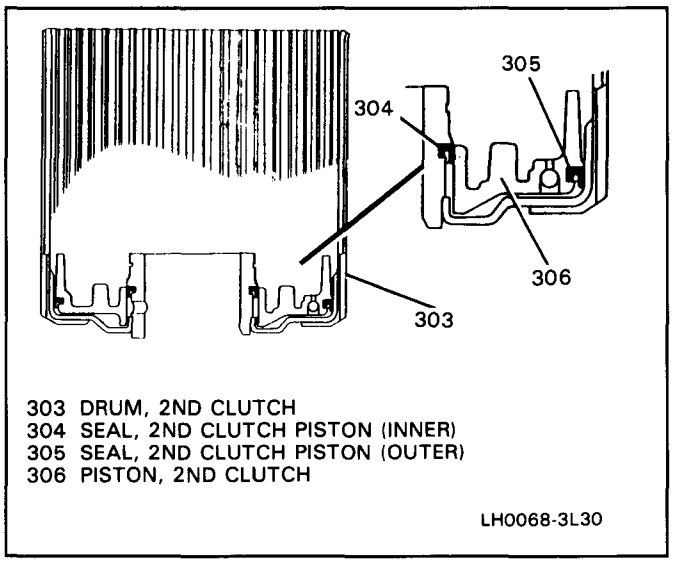

Figure 35 Second Clutch Piston Lip Seals

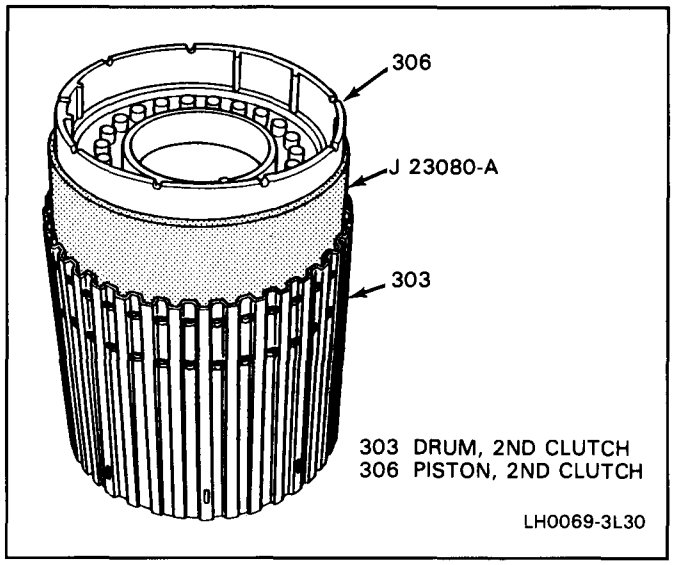

Figure 36 Installing Second Clutch Piston Into Second Clutch Drum

Assemble

Figure 37

1. Third clutch and input shaft assembly into the second clutch drum.
2. Second and third clutch assembly.

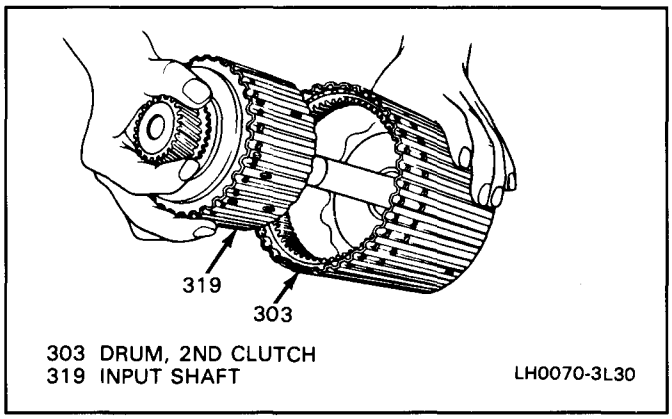

Figure 37 Installing Third Clutch Assembly Into Second Clutch Assembly

Reverse Clutch Parts

Figure 38

Assemble

1. Aluminum pressure plate with the flat side up.
   LUGS ON PRESSURE PLATE MUST ENGAGE NARROW NOTCH IN THE CASE.
2. Reverse clutch plates.
   - Start with a steel plate and alternate with a composition plate.
3. Waved clutch plate. Clutch plate lugs must engage narrow notches in the case.

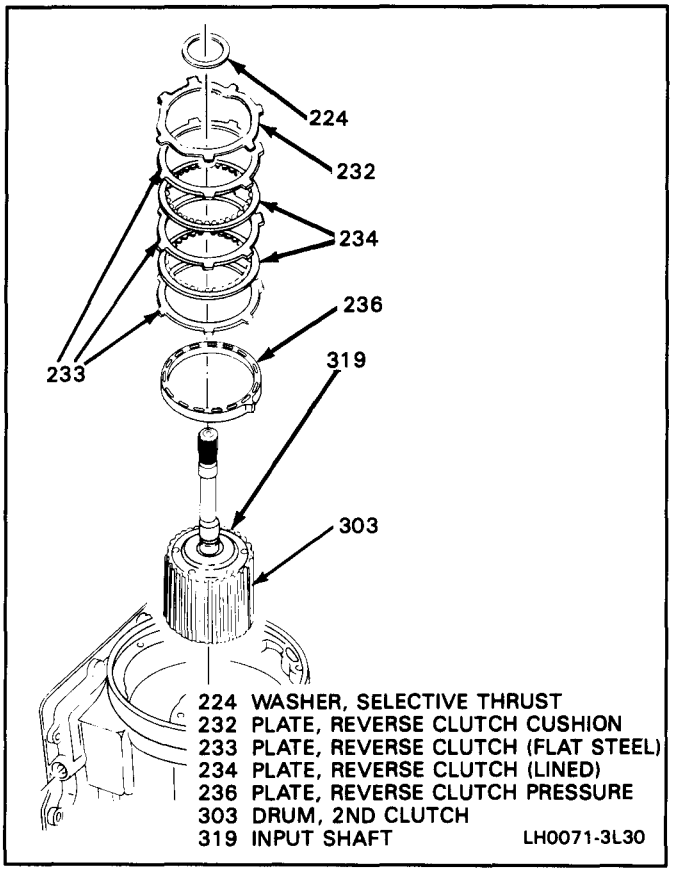

Figure 38 Installing Second/Third Clutch Assemblies Into Case

Determining Selective Washer Thickness

Figures 39 and 40

Tool Required:

J 23085 Selective Washer Gaging Tool

Measure

1. Install J 23085 on the case flange and against the input shaft.
2. Position the inner shaft of J 23085 against the thrust surface of the second speed clutch hub.
3. Tighten thumb screw. Remove J 23085.
4. Measure gap "A". Compare measurement "A" to the chart with pin gage or equivalent.
   - Selective washer thickness must not exceed measurement "A".

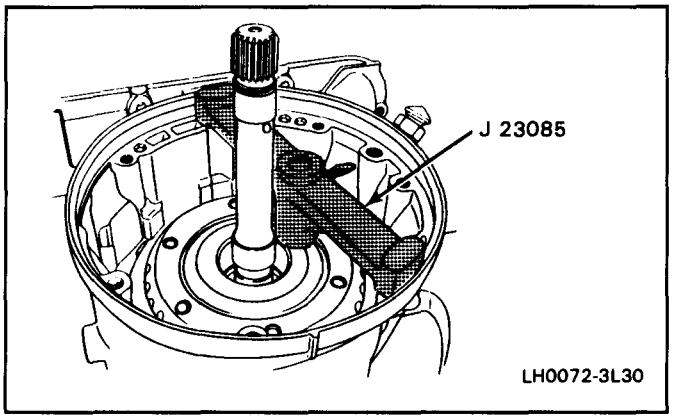

Figure 39 Gaging Tool in Position

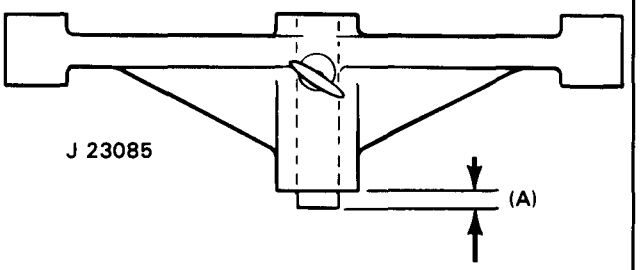

WHEN MEASURED GAP (A) IS:

INCHES	mm	I.D. NUMBER	USE WASHER PART NUMBER
.069 - .074	1.78 - 1.88	2	96013761
.075 - .079	1.93 - 2.03	3	96013762
.080 - .084	2.06 - 2.16	4	96013763
.085 - .089	2.18 - 2.29	4	96013764
.090 - .094	2.31 - 2.41	6	96013765
.095 - .100	2.46 - 2.57	7	96013766

FOLLOWING THE PROCEDURE SHOULD RESULT IN FINAL END-PLAY FROM 0.36mm TO 0.79mm (.014 in. TO .031 in.)

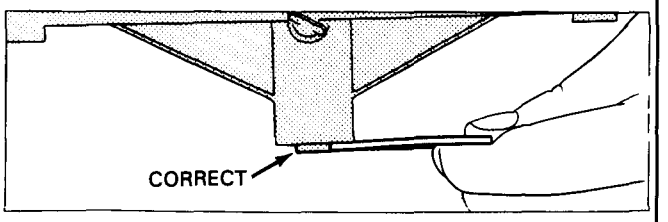

PH0073-3L30

Figure 40 Selective Washer Chart

Converter Housing, Pump Assembly and Reverse Clutch

Figures 41 through 52

Tools Required:

J 23327 Clutch Spring Compressor

J 23082 Converter Housing to Pump Assembly Alignment Tool

J 21359 Seal Installation Tool

Remove or Disconnect

Figures 41 and 42

1. Pump to case gasket.
2. Pump outer square cut gasket.
3. Five pump to converter bolts.
4. Separate the pump from the converter housing.
5. Pump wear plate.
6. Pump gears.

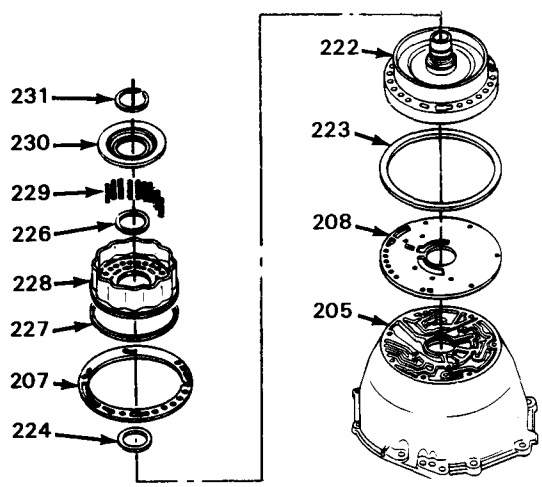

205 HOUSING, CONVERTER
207 GASKET, OIL PUMP
208 PLATE, OIL PUMP WEIR
222 BODY, OIL PUMP
223 SEAL, OIL PUMP (OUTER)
224 WASHER, SELECTIVE THRUST
226 SEAL, REVERSE CLUTCH PISTON (INNER)
227 SEAL, REVERSE CLUTCH PISTON (OUTER)
228 PISTON, REVERSE CLUTCH
229 SPRING, CLUTCH PISTON RETURN
230 SEAT, REVERSE CLUTCH PISTON RETURN SPRING
231 RING, CLUTCH PISTON SPRING SEAT RETAINER

LH0074-3L30

Figure 41 Disassemble View of Converter Housing, Pump Assembly and Reverse Clutch

Disassemble

Figures 41 and 43

1. Install J 23327.
2. Compress the reverse clutch return springs.
3. Retaining ring.
4. Release the reverse clutch return springs.
   DO NOT LET SPRING SEAT CATCH IN RING GROOVE.
5. Remove J 23327, spring seat and return springs.
6. Reverse clutch piston. Apply compressed air to the "apply" fluid passage.
7. Inner and outer piston oil seals if necessary.

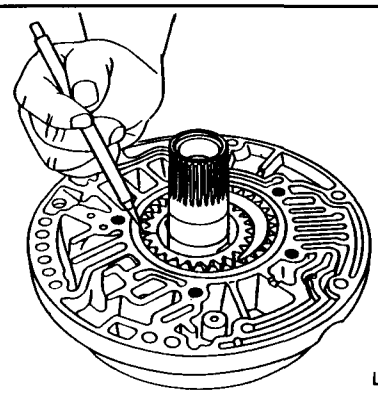

LH0075-3L30

Figure 42 Marking Location of Pump Gear

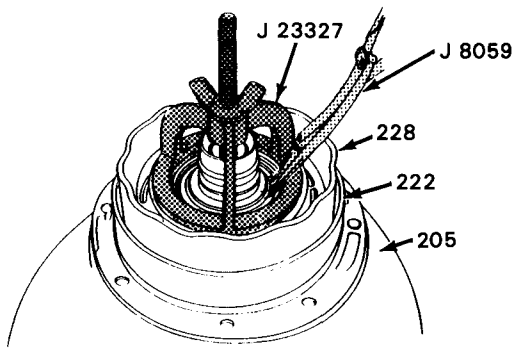

205 HOUSING, CONVERTER
222 BODY, OIL PUMP
228 PISTON, REVERSE CLUTCH

LH0076-3L30

Figure 43 Compressing Reverse Clutch Piston Retainer

Disassemble

Figure 44

Do not remove the converter clutch control valve, pressure regulator valve, or the reverse boost valve, unless determined by fluid pressure checks to be malfunctioning.

CAUTION: Valves are under spring pressure, use caution when disassembling.

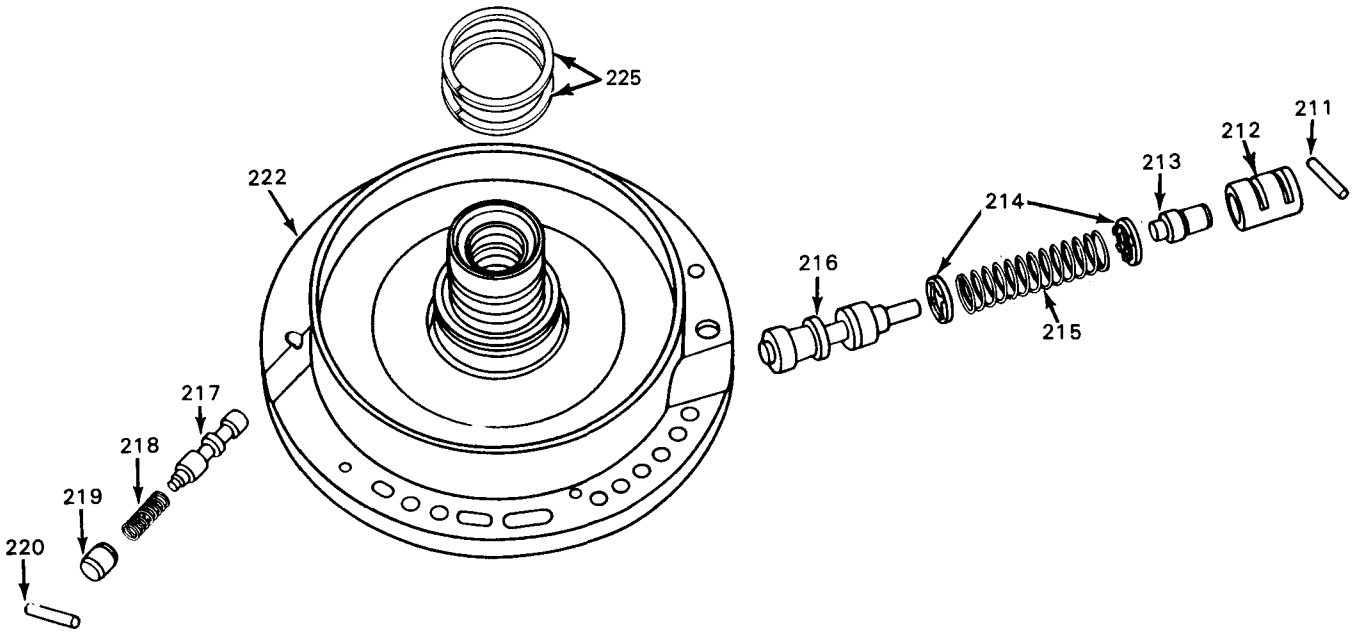

211 PIN, OIL PUMP BOOST SLEEVE RETAINER
212 SLEEVE, OIL PUMP BOOST
213 VALVE, OIL PUMP BOOST
214 SEAT, PRESSURE REGULATOR VALVE SPRING
215 SPRING, PRESSURE REGULATOR VALVE
216 VALVE, PRESSURE
217 VALVE, CLUTCH CONTROL
218 SPRING, CLUTCH CONTROL VALVE
219 PLUG, CLUTCH CONTROL VALVE
220 PIN, CLUTCH CONTROL VALVE
222 BODY, OIL PUMP
225 RING, 2ND CLUTCH OIL SEAL

PH0077-3L30

Figure 44 Disassemble View – Valves in Pump Assembly

1. Retaining pin from the converter clutch control port.
2. Pump boost valve sleeve, boost valve, spring, spring seats and valve.
3. Screen, retainer, valve and spring.
4. Pump seal rings.

Inspect

Figures 44 and 45

- Reverse boost valve, pressure regulator valve and the converter clutch control valve for:
  - Nicks.
  - Scoring.
  - Damage.
- Pump seal rings for:
  - Side wear.
  - Damage.

Clean

- Thoroughly clean the pressure regulator valve, reverse boost valve and the converter clutch control valve.
- Soak valves in DEXRON®-IIE transmission fluid.

Assemble

1. Spring, valve, retainer and screen.
2. Plug, valve, spring seats, spring, pump boost valve, sleeve and retaining ring.
3. Two piston seals.

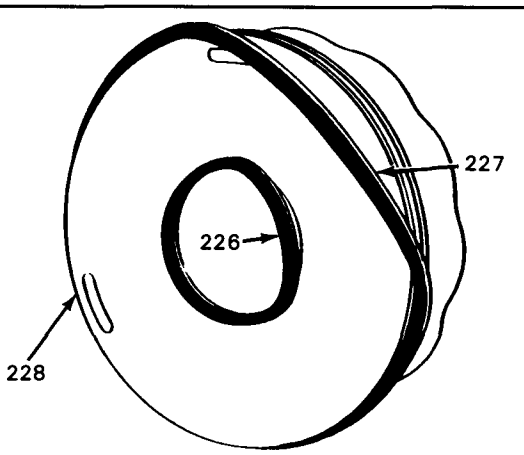

226 SEAL, REVERSE CLUTCH PISTON (INNER)
227 SEAL, REVERSE CLUTCH PISTON (OUTER)
228 PISTON, REVERSE CLUTCH

LH0078-3L30

Figure 45 Reverse Clutch Piston

Assemble

Figures 46 and 47

1. Inner and outer piston seals.
2. Reverse clutch piston onto the rear face of the pump assembly.
3. Clutch return springs.
4. Spring seat and snap ring.
5. Install J 23327.
6. Compress clutch piston return springs.
7. Snap ring. Remove J 23327.

Assemble

- Pump gears with marks on the driven gear facing up.

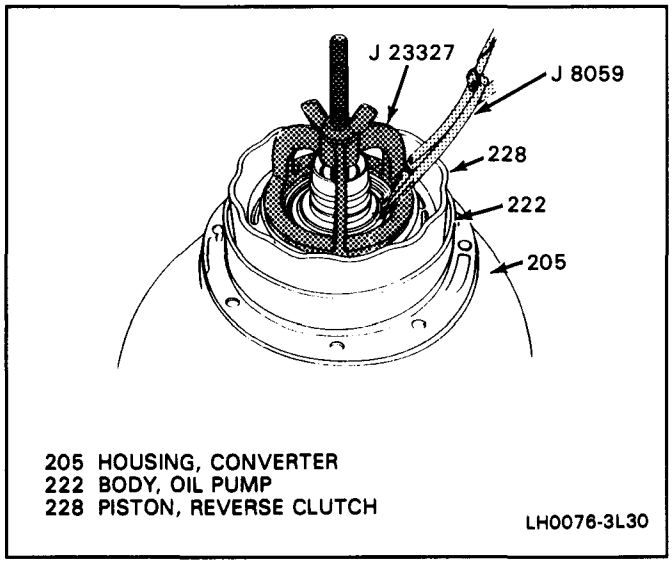

Figure 46 Compressing Reverse Clutch Piston Retainer

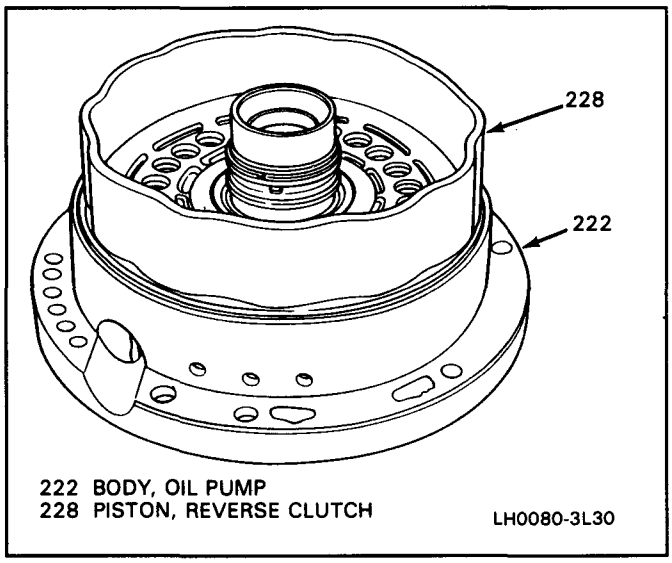

Figure 47 Installing Reverse Clutch Piston Into Pump Assembly

Measure

Figure 48

- Use a straight edge and a feeler gage to measure between the gear face and the pump face. Clearance should be 0.0127 to 0.0839 mm (0.0005 to 0.00325 inch).
- Pump rotating checking tool.
- Pump gear centering tool.

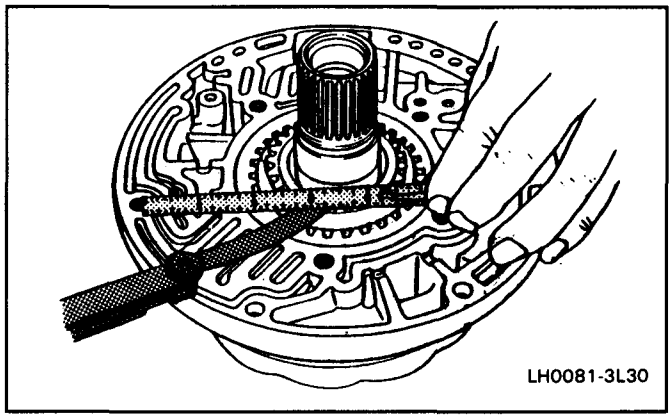

Figure 48 Checking Pump Gear Clearance

Assemble

Figures 49 and 50

NOTICE: Failure to use J 23082 will cause pump damage when transmission is operated after assembly.

1. Remove and replace O-rings from pipes.
2. Pump wear plate.
3. Converter housing oil seal. Use J 21359.
4. Converter housing onto the pump assembly.
5. Loosely install pump bolt.
6. Install J 23082. Tool will bottom out on the pump gear.
7. Tighten pump bolts to half torque, then go to 19 N•m (14 lb. ft.) in an alternating pattern.
8. Remove J 23082.

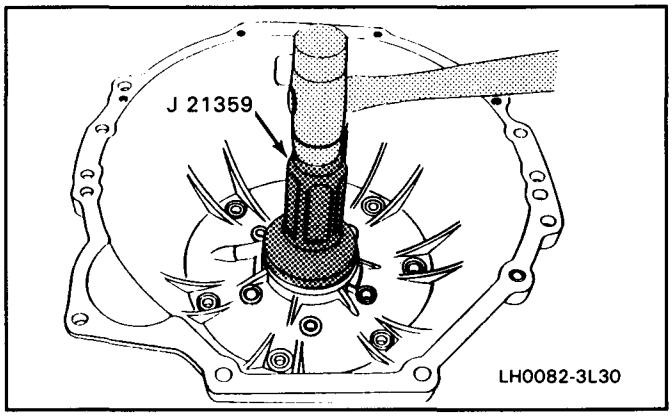

Figure 49 Installing Front Pump Seal

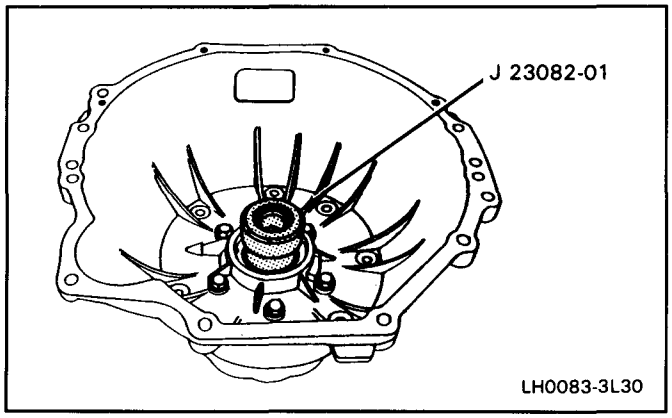

Figure 50 Aligning Converter Housing to Pump Assembly

Assemble

Figures 51 and 52

1. Pump to case gasket.
   - Retain with TRANSJEL™ J 36850 or equivalent.
2. Pump outer square cut seal.
3. Converter housing and reverse clutch assembly. Use guide pins.
4. Converter to case bolts.

Tighten

- Bolt to 33 N•m (24 lb. ft.)
- Rotate input shaft to check for proper assembly.

Install or Connect

- Input O-ring.

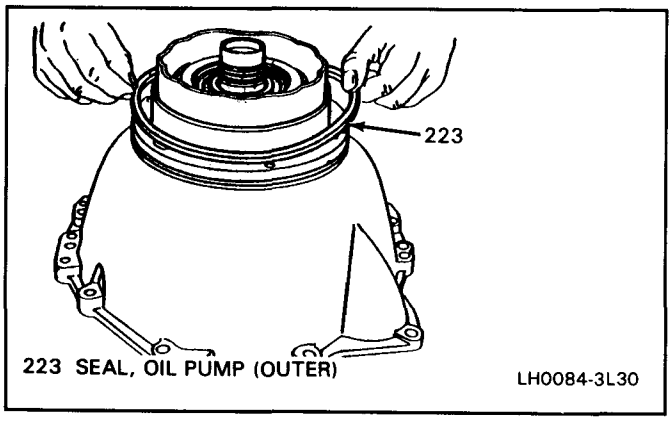

Figure 51 Installing Pump Assembly Outer Seal

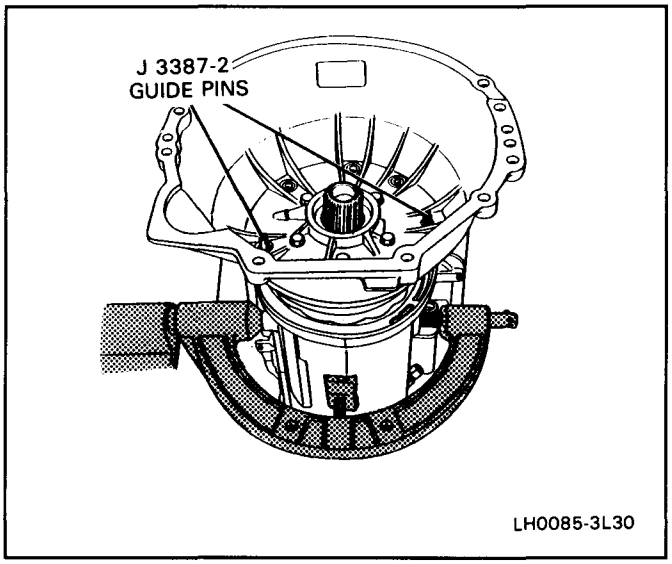

Figure 52 Installing Converter Housing Using Guide Pins

Governor Hub

Figures 53 and 54

Inspect

- Seal rings for nicks, burrs, or damage.
- Governor hub oil screen.
- Governor hub splines for:
  - Cracks.
  - Chipped teeth.

Assemble

1. Oil screen flush with the governor hub.
2. Seal rings if necessary.
3. Governor hub.
4. Snap ring.

Governor Body and Speedometer Drive Gear

Figure 55

Disassemble

1. Secondary valve spring retainer.
2. Secondary valve spring, secondary valve and the primary valve.

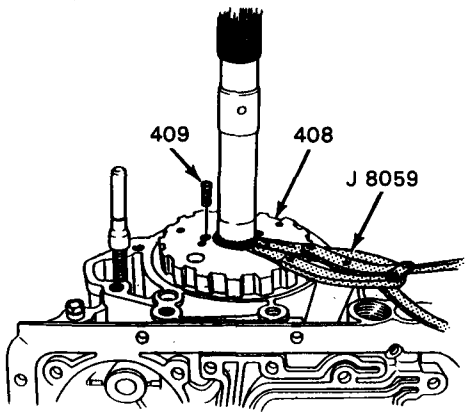

408 HUB, GOVERNOR
409 SCREEN, GOVERNOR OIL

LH0086-3L30

Figure 53 Installing Snap Ring to Governor Hub and Oil Screen

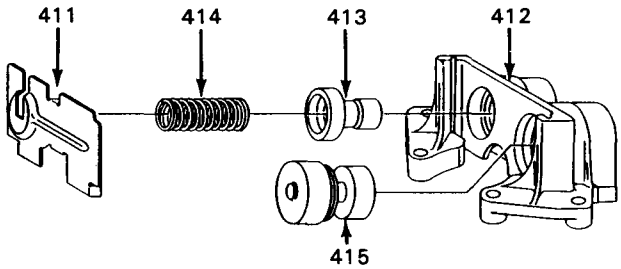

411 RETAINER, SECONDARY VALVE
412 BODY, GOVERNOR
413 VALVE, SECONDARY
414 SPRING, SECONDARY
415 VALVE, PRIMARY

LH0087-3L30

Figure 54 Governor Assembly – Disassembled View

Inspect

Figure 55

- Primary and secondary valves (small end first) for:
  - Nicks.
  - Burrs.
- Fluid passages and valve bores for:
  - Nicks.
  - Burrs.
  - Varnish.
- Secondary spring and retainer.
- Governor body, gasket, bolts.

Tighten

- Bolts to 8 N•m (71 lb. in.)
- Valve should move freely.

Assemble

- Speedometer drive gear and retaining clip.

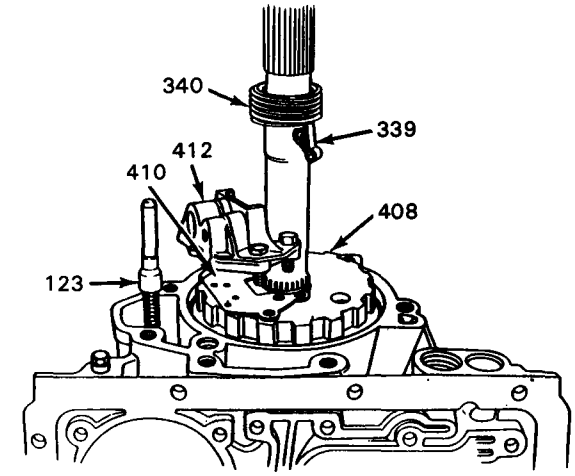

123 ACTUATOR, PARKING LOCK PAWL
339 CLIP, SPEEDO DRIVE GEAR
340 GEAR, SPEEDO DRIVE
408 HUB, GOVERNOR
410 GASKET, GOVERNOR
412 BODY, GOVERNOR

LH0042-3L30

Figure 55 Installing Governor Body and Speedometer Drive Gear

Extension Housing and Speedometer Drive Gear

Figures 56 through 58

Tool Required:

J 21426 Extension Housing Seal Installer

Inspect

Figure 56

- Extension housing for cracks or porosity.
- Parking pawl and spring.

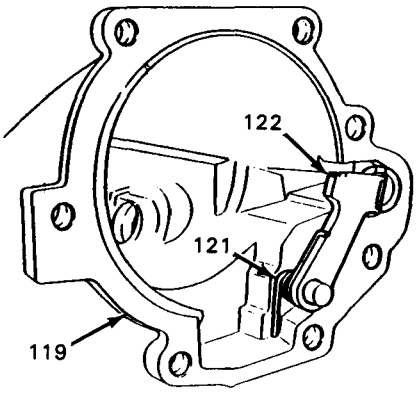

119 EXTENSION HOUSING
121 SPRING, PARKING LOCK PAWL
122 PAWL, PARKING LOCK

LH0043-3L30

Figure 56 Extension Housing and Parking Pawl

Assemble

Figures 57 and 58

1. Extension housing seal, use J 21426.
2. Parking pawl and spring.
3. Gasket.
4. Align the parking pawl actuator rod into the extension housing.
5. Extension housing bolts.

Tighten

- Bolts to 31 N•m (23 lb. ft.)

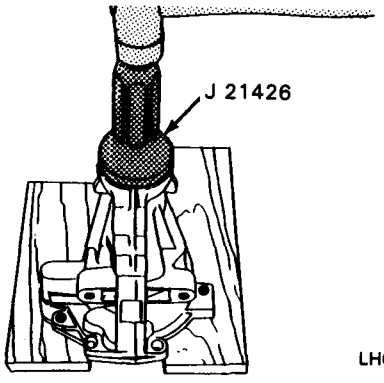

LH0090-3L30

Figure 57 Installing Extension Housing Seal

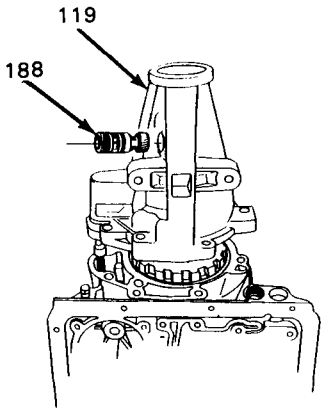

119 EXTENSION HOUSING
188 GEAR, SPEEDOMETER DRIVEN

LH0040-3L30

Figure 58 Extension Housing and Speedometer Driven Gear

Assemble

1. Speedometer driven gear housing O-ring if necessary.
2. Bolt and speedometer guide bracket.

Tighten

- Bolt to 9.5 N•m (85 lb. in.)

Detent Valve and Modulator

Figures 59 through 64

Tools Required:

J 23100 Modulator Wrench

J 23075 Servo and Clutch Piston Compressor

J 38428 Servo Piston Ring Sleeve

Inspect

Figures 59 and 60

- Detent valve sleeve for nicks, scratches, or scoring.
- Detent valve for nicks, or scoring.
- Modulator plunger for nicks, scratches, or scoring.
- Modulator valve sleeve for nicks, scratches, or scoring.
- Modulator valve for nicks, scratches, or scoring.

Assemble

1. Spring seat, spring, detent valve, SLOTS FACE PAN. Detent valve sleeve, seal and retaining pin.
   - Lubricate with DEXRON®-IIE transmission fluid.

2. Modulator valve sleeve, small end first.
   - TAB MUST ENGAGE SLOT IN MODULATOR BORE.
3. Modulator valve and plunger.
4. O-ring onto the modulator assembly.

NOTICE: Use of another tool to install the vacuum modulator may result in internal damage to the modulator.

5. Modulator assembly.

Tighten

- Modulator to 52 N•m (38 lb. ft.) with J 23100.

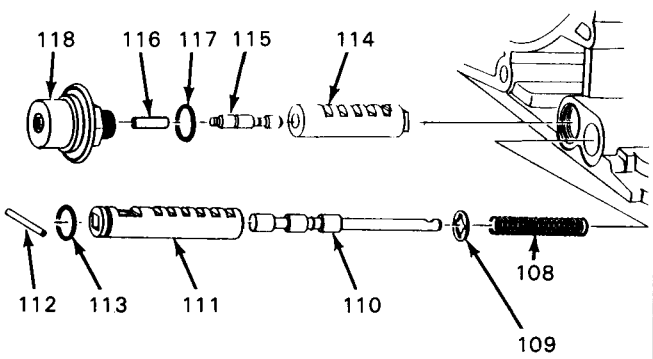

108 SPRING, DETENT VALVE
109 SEAT, SPRING DETENT VALVE
110 VALVE, DETENT
111 SLEEVE, DETENT VALVE
112 PIN, DETENT VALVE
113 SEAL, DETENT VALVE SLEEVE
114 SLEEVE, MODULATOR VALVE
115 VALVE, MODULATOR
116 PLUNGER, MODULATOR
117 SEAL RING, MODULATOR
118 MODULATOR

PH0039-3L30

Figure 59 Installing Detent Valve and Modulator Valve

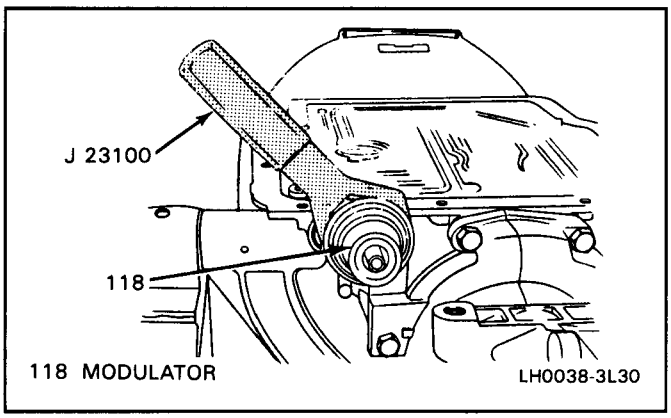

Figure 60 Installing Vacuum Modulator

Servo Piston

Figure 61

Disassemble

NOTICE: Band assembly should be in the correct position.

1. Servo piston and apply rod.
2. Locknut.
3. Position servo piston and sleeve in a press.
4. Compress the cushion spring.
5. Retaining clip.
6. Release the cushion spring.
7. Sleeve, spring seats, cushion spring and adjusting bolt.

Inspect

- Servo piston ring for:
  - Nicks, burrs, or side damage.
- Piston sleeve for nicks or burrs.
- Apply rod for nicks, burrs, or scoring.

Assemble

1. Spring seats and cushion spring onto the sleeve.
2. Insert the sleeve into the piston.
3. Position the piston and sleeve in a press.
4. Compress the cushion spring.
5. Retaining clip.
6. Release the cushion spring.
7. Adjust ring bolt into the sleeve.
8. Locknut. Do not tighten.
9. Piston ring, if necessary.

Install or Connect

Figures 62, 63 and 64

1. Servo apply rod, turn spring and piston.
   - Round end goes into case.
2. Install J 23075 with tool offset toward the rear of the case. Place J 38428 sleeve inside J 23075.
3. Place piston inside J 38428 sleeve.
4. Compress the servo piston return spring using J 23075.
5. Retaining ring.
6. Remove J 23075 and J 38428.

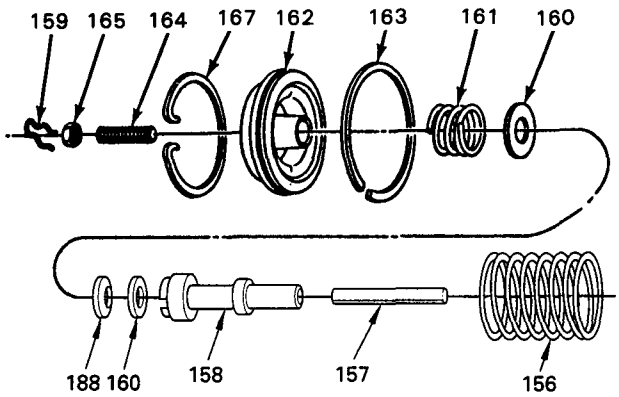

156 SPRING, SERVO PISTON RETURN
157 ROD, SERVO PISTON
158 SLEEVE, SERVO PISTON ADJUSTING
159 RETAINER, SERVO PISTON CUSHION SPRING
160 SEAT, SERVO PISTON CUSHION SPRING
161 SPRING, SERVO PISTON CUSHION
162 PISTON, SERVO
163 RING, SERVO PISTON SEAL
164 SCREW, SERVO PISTON ADJUSTING
165 NUT, SERVO PISTON ADJUSTING SCREW
167 RING, SERVO PISTON RETAINER
188 SPRING, SERVO PISTON CUSHION

PH0094-3L30

Figure 61 Servo Piston – Disassemble View

Adjust

1. Hold the servo piston sleeve.
   Proceed with the adjusting operation by using a special torque wrench with a 3/16 inch hex head.
2. Loosen the servo locknut.
3. Tighten the adjusting bolt up to 4.5 N•m (40 lb. in.).
4. Be certain that the locknut remains loose.
5. Back off the adjusting bolt five turns exactly.
6. Retighten the locknut at 18.9 N•m (14 lb. ft.) by holding the adjusting bolt and sleeve firmly.
7. Install a new servo cover gasket.
8. Install the servo cover, torque to 24.4 N•m (18 lb. ft.).

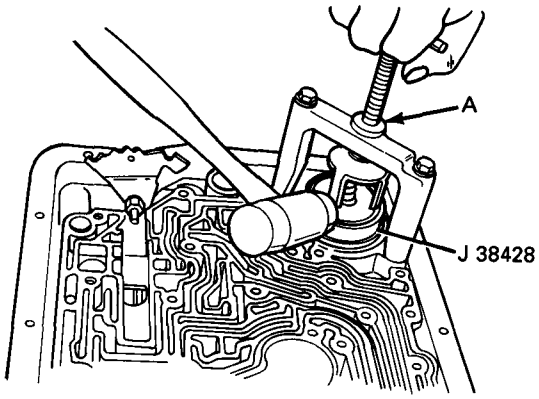

A OFFSET OF TOOL J 23075 TOWARD REAR OF CASE

LH0095-3L30-R1

Figure 62 Installing Servo Assembly

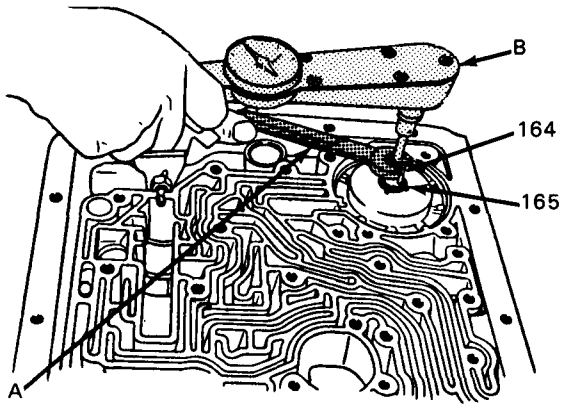

A HOLDING WRENCH
B TORQUE WRENCH
164 SCREW, SERVO PISTON ADJUSTING
165 NUT, SERVO PISTON ADJUSTING SCREW

LH0096-3L30

Figure 63 Adjusting Servo Apply Rod

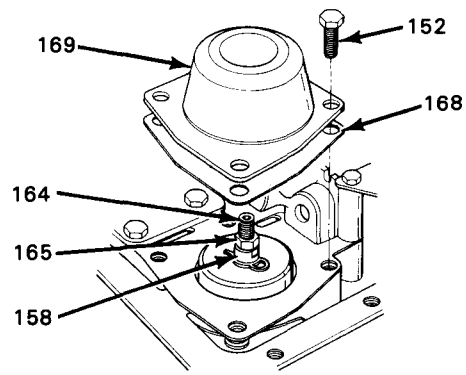

152 BOLT, SERVO COVER & REINF. PLATE
158 SLEEVE, SERVO PISTON ADJUSTING
164 SCREW, SERVO PISTON ADJUSTING
165 NUT, SERVO PISTON ADJUSTING SCREW
168 GASKET, SERVO PISTON COVER
169 COVER, SERVO PISTON

LH0097-3L30

Figure 64 Tighten Servo Nut

Control Valve Assembly

Figures 65 through 68

Disassemble

Figure 65

1. Manual valve and manual valve link.
2. Transfer plate and gaskets.

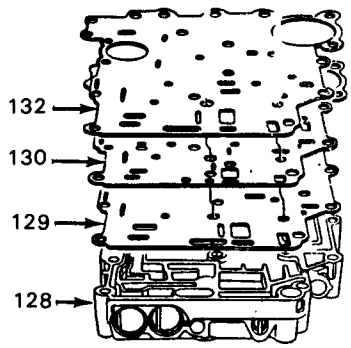

128 VALVE BODY AND ACCUMULATOR PISTON ASM.
129 GASKET, TRANSFER PLATE
130 PLATE, TRANSFER
132 GASKET, TRANSFER PLATE TO CASE PH0098-3L30

Figure 65 Removing Transfer Plate

NOTICE: The use of a honing stone, fine sandpaper or crocus cloth is not recommended for servicing stuck valves. All valve lands have sharply machined corners that are necessary to "cleaning" the bore. If these corners are rounded, foreign material could wedge between the valve and the bore causing the valve to stick. If it is found necessary to clean a valve "micro fine" lapping compound 900 grit or finer should be used.

Too much "lapping" of the valve will cause excessive clearances and increase the chance of a valve not operating.

Disassemble

- Position the control valve as shown on a clean surface.
  - A. Remove the valve trains beginning with the upper left hand corner.
  - B. Some of the valves are under pressure – cover the bores while removing the retaining pins.
  - C. Remove blind hole roll pins with a modified drill bit.
  - D. Valves, springs and sleeves must be laid out on a clean surface in the exact sequence they are removed.

Clean

- All valves, springs, sleeves and control valve body.
- Dry using compressed air.

Inspect

- All valves and sleeves for:
  - Porosity.
  - Scoring.
  - Nicks.
  - Scratches.
- Springs for damaged or distorted coils.
- Valve body casting for:
  - Porosity.
  - Cracks.
  - Interconnected fluid passages.
  - Damaged machined surfaces.

Assemble

- Control valve assembly exactly as shown.
- Notice the position of the valve lands and sleeves position.

Assemble

Figure 65

1. Gasket and transfer plate.
   - Use guide pins J-3387-2.
2. Manual valve and manual valve link.
   - Long side of link into manual valve.

Assemble

Figures 67 and 68

1. Checkball.
2. Gasket.
3. Control valve. Position manual valve link as shown.
4. Bolts.

Tighten

- Bolts to 19 N•m (14 lb. ft.)

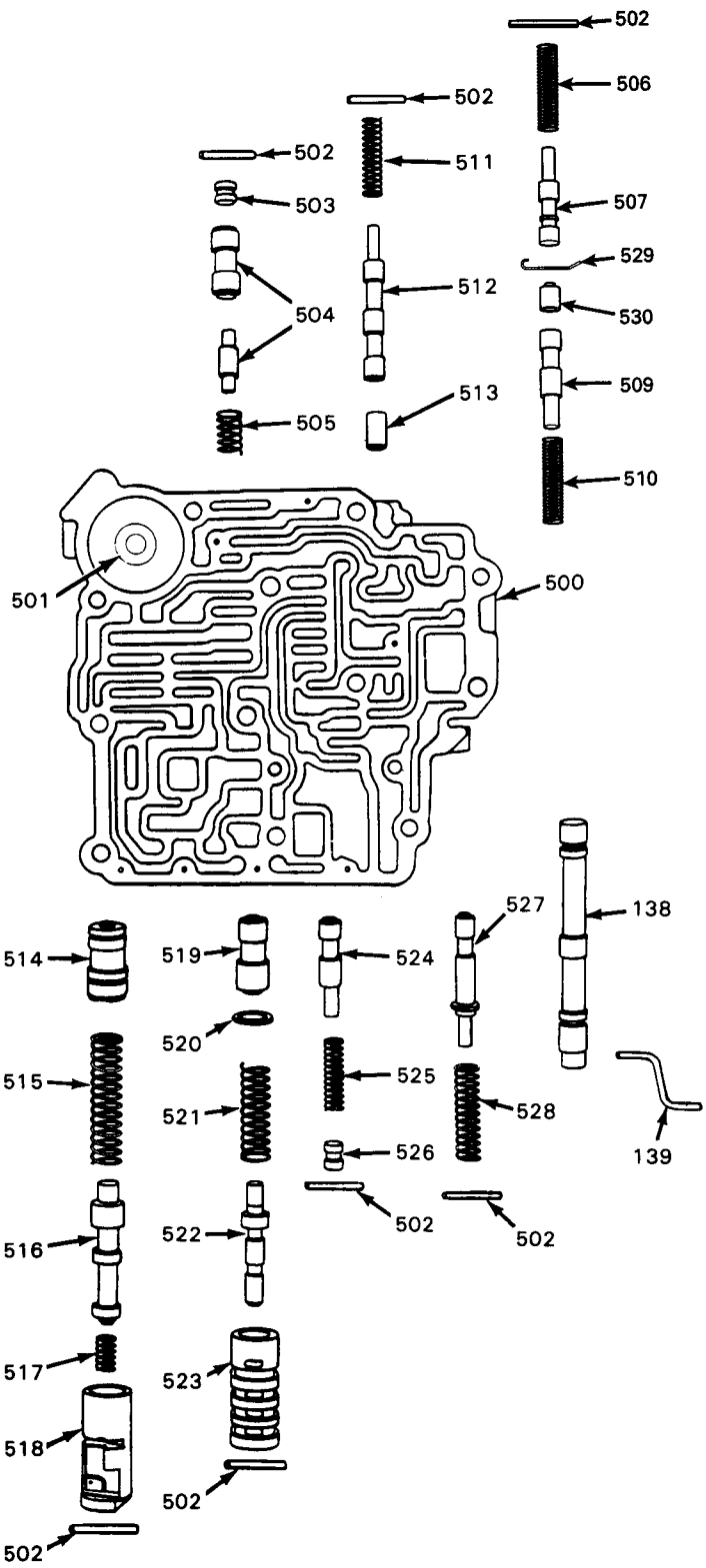

138 VALVE, MANUAL
139 LINK, MANUAL
500 BODY, CONTROL VALVE
501 1-2 ACCUMULATOR PISTON ASSEMBLY
502 PIN, RETAINING
503 PLUG, 1-2 ACCUMULATOR VALVE
504 VALVE, 1-2 ACCUMULATOR
505 SPRING, 1-2 ACCUMULATOR VALVE 1/2" X 1-1/16"
506 SPRING, DOWNSHIFT TIMING VALVE (HIGH SPEED) 7/16" X 1-5/16"
507 VALVE, DOWNSHIFT TIMING (HIGH SPEED)
509 VALVE, DOWNSHIFT TIMING (LOW SPEED)
510 SPRING, DOWNSHIFT TIMING VALVE (LOW SPEED) 7/16" X 1-3/8"
511 SPRING, MANUAL LOW CONTROL VALVE 7/16" X 1-5/16"
512 VALVE, MANUAL LOW CONTROL
513 VALVE, REVERSE CONTROL
514 VALVE, 1-2 SHIFT
515 SPRING, 1-2 SHIFT CONTROL VALVE 3/4" X 2-7/16"
516 VALVE, 1-2 SHIFT CONTROL
517 SPRING, 1-2 SHIFT CONTROL VALVE
518 SLEEVE, 1-2 SHIFT CONTROL VALVE
519 VALVE, 2-3 SHIFT
520 SEAT, 2-3 SHIFT CONTROL VALVE SPRING
521 SPRING, 2-3 SHIFT CONTROL VALVE 11/16" X 1-3/4"
522 VALVE, 2-3 SHIFT CONTROL
523 SLEEVE, 2-3 SHIFT CONTROL VALVE
524 VALVE, 3-2 CONTROL
525 SPRING, 3-2 CONTROL VALVE 7/16" X 1-3/4"
526 PLUG, 3-2 CONTROL VALVE
527 VALVE, DETENT PRESSURE REGULATOR
528 SPRING, DETENT PRESSURE REGULATOR VALVE 1/2" X 1-5/8"
529 RETAINER, VALVE
530 VALVE, INTERMEDIATE

PH0099-3L30

Figure 66 Typical Valve Body

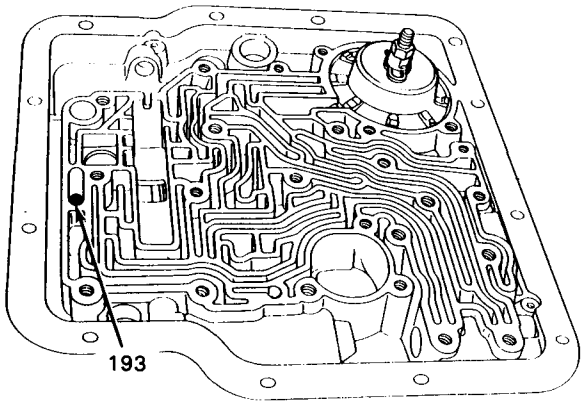

193 BALL, CHECK

LH0100-3L30-R1

Figure 67 Installing Checkball in Fluid Passages

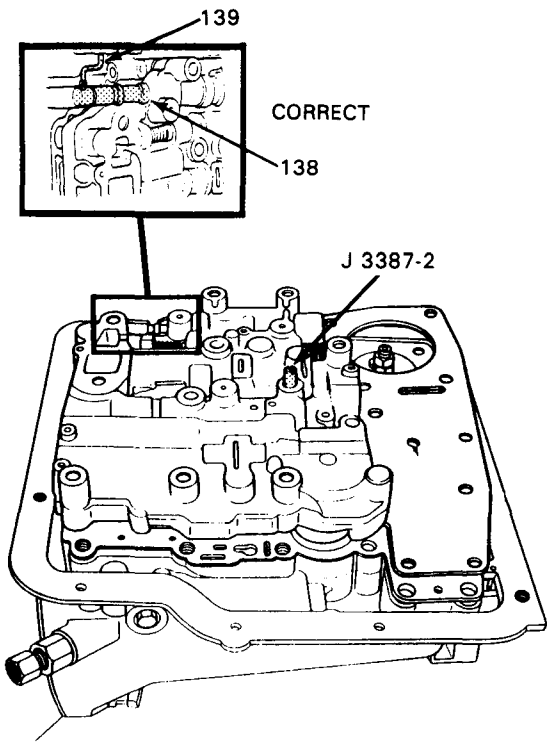

138 VALVE, MANUAL
139 LINK, MANUAL VALVE

LH0101-3L30

Figure 68 Installing Valve Body

External Parts

Figures 69, 70 and 71

Install or Connect

Figure 69

1. Bolts and selector lever roller and spring.

   Tighten

   - Bolts to 13 N•m (116 lb. in.)
2. Bolts, reinforcement plate and ground wire.

   Tighten

   - Bolts to 19 N•m (14 lb. ft.)
3. Governor pressure switch.

   Tighten

   - Pressure switch to 10 N•m (89 lb. in.)
4. Solenoid tubing, solenoid and bolts.
   - O-ring onto tubes, tubes into solenoid

   Tighten

   - Bolts to 19 N•m (14 lb. ft.)

   Important

   - Make sure tubing does not interfere with manual valve operation.
5. Electrical connections at solenoid, governor pressure switch and case connector.

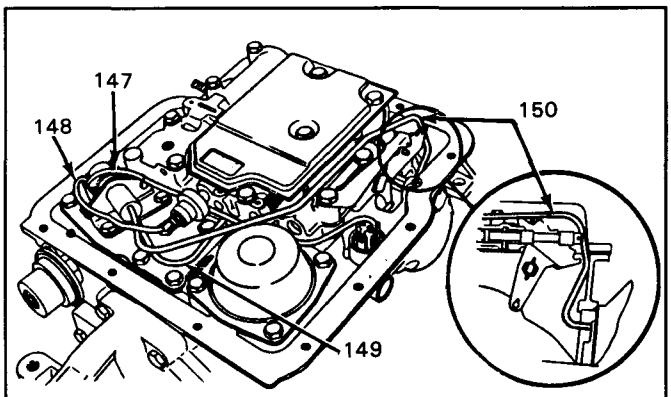

147 SOLENOID & BRACKET ASSEMBLY
148 WIRING HARNESS
149 TUBE, SOLENOID TO VALVE BODY
150 TUBE, SOLENOID TO OIL PUMP

PH0035-3L30

Figure 69 Hookup of Solenoid Pipes and Electrical Wires

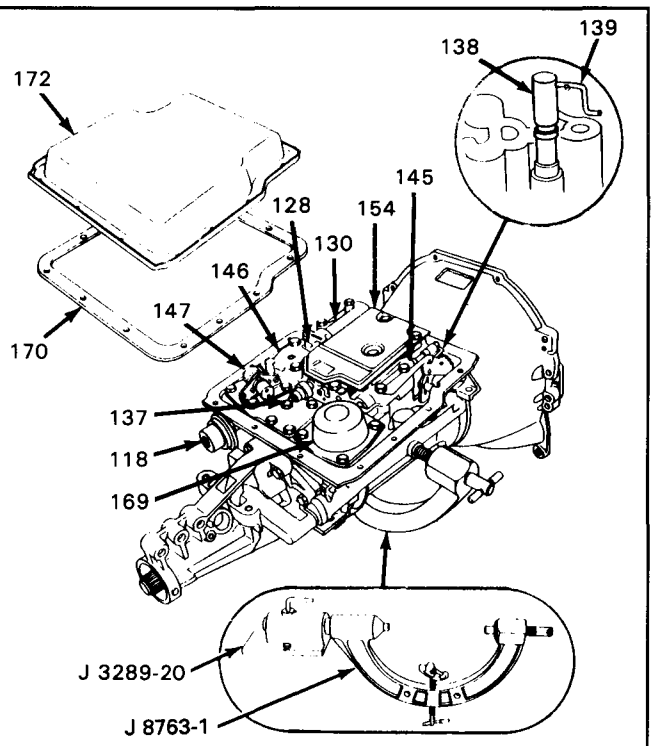

118 MODULATOR
128 VALVE BODY & ACCUMULATOR PISTON ASSEMBLY
130 PLATE, TRANSFER
137 SWITCH, OIL PRESSURE
138 VALVE, MANUAL
139 LINK, MANUAL VALVE
145 ROLLER, MANUAL DETENT
146 PLATE, REINFORCEMENT
147 SOLENOID & BRACKET ASSEMBLY
154 SCREEN, OIL PUMP
169 COVER, SERVO PISTON
170 GASKET, OIL PAN
172 PAN, OIL

PH0034-3L30

Figure 70 External Parts

Install or Connect

Figures 70 and 71

1. Servo cover, gasket and bolts.

   Tighten

   - Bolts to 24.4 N•m (18 lb. ft.)
2. Oil strainer, gasket and bolts.

   Tighten

   - Bolts to 18.9 N•m (14 lb. ft.)
3. Oil pan, gasket and bolts.

   Tighten

   - Bolts to 11 N•m (98 lb. in.)
4. Torque converter.

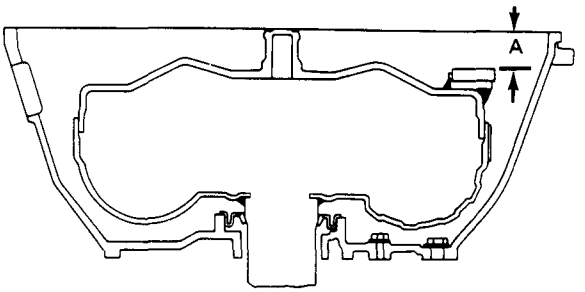

A = 21.2/23.2mm (.83/.91")

LH0104-3L30

Figure 71 Proper Converter Installation

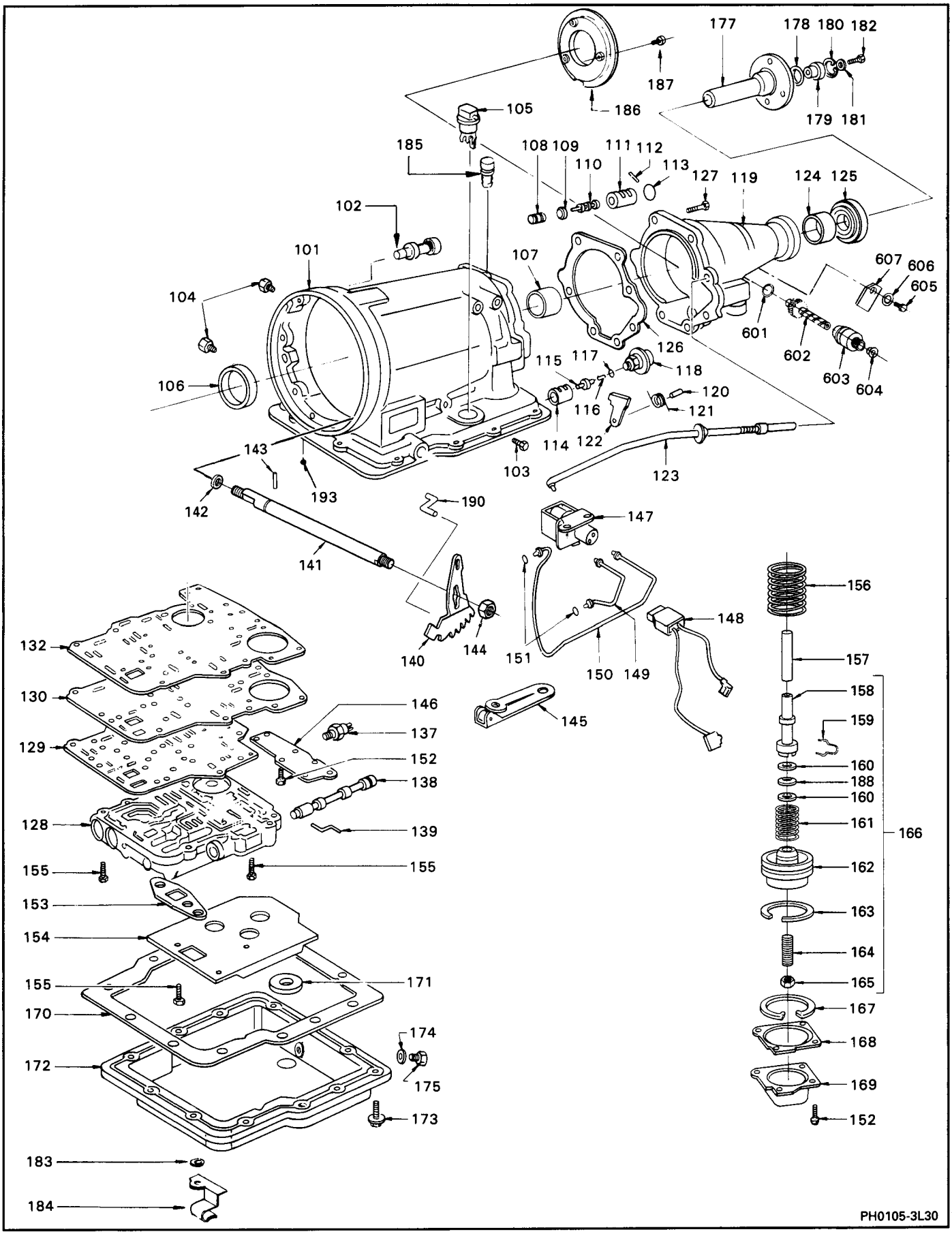

Figure 72 Case, Valve Body and Lo Servo Piston

ILL. NO.	DESCRIPTION
101	CASE, TRANSMISSION
†102	BREATHER, FRONT
103	PLUG, PRESSURE CHECK
104	CONNECTOR, OIL COOLER
§105	CONNECTOR, ELECTRICAL ASSEMBLY
106	SLEEVE, REACTION SUN
107	BUSHING, CASE
108	SPRING, VALVE KICKDOWN
109	SEAT, SPRING VALVE KICKDOWN
110	VALVE KICKDOWN
111	SLEEVE, VALVE KICKDOWN
112	PIN, VALVE KICKDOWN
113	SEAL, VALVE SLEEVE KICKDOWN
114	SLEEVE, VALVE MODULATOR
115	VALVE, MODULATOR
116	PLUNGER, MODULATOR
117	SEAL RING, MODULATOR
118	MODULATOR
119	EXTENSION HOUSING
120	SHAFT, PARKING LOCK PAWL
121	SPRING, PARKING LOCK PAWL
122	PAWL, PARKING LOCK
123	ACTUATOR, PARKING LOCK PAWL
124	BEARING, EXTENSION
125	SEAL RING, EXTENSION OIL
126	GASKET, EXTENSION TO CASE
127	BOLT, EXTENSION TO CASE
128	VALVE BODY AND ACCUMULATOR PISTON ASSEMBLY
129	GASKET, TRANSFER PLATE
130	PLATE, TRANSFER
132	GASKET, TRANSFER PLATE TO CASE
133	SPRING, ACCUMULATOR PISTON
134	RING, OIL SEAL ACCUMULATOR PISTON
135	PISTON, ACCUMULATOR
136	PIN, ACCUMULATOR PISTON
§137	SWITCH, OIL PRESSURE
138	VALVE, MANUAL
139	LINK, MANUAL VALVE
140	LEVER, PARKING LOCK AND RANGE SELECTOR
141	SHAFT, SELECTOR
142	SEAL, SELECTOR SHAFT
143	PIN, SELECTOR SHAFT
144	NUT, SELECTOR SHAFT
145	ROLLER, MANUAL DETENT
146	PLATE, REINFORCEMENT
§147	SOLENOID AND BRACKET ASSEMBLY
§148	WIRING HARNESS
§149	TUBE, SOLENOID TO VALVE BODY
§150	TUBE, SOLENOID TO OIL PUMP
§151	SEAL, O-RING
152	BOLT, SERVO COVER AND REINF. PLATE
153	GASKET, OIL SCREEN
154	SCREEN, OIL PUMP
155	BOLT, VALVE BODY TO CASE
156	SPRING, SERVO PISTON RETURN
157	ROD, SERVO PISTON
158	SLEEVE, SERVO PISTON ADJUSTING
159	RETAINER, SERVO PISTON CUSHION SPRING
160	SEAT, SERVO PISTON CUSHION SPRING
161	SPRING, SERVO PISTON CUSHION
162	PISTON, SERVO
163	RING, SERVO PISTON SEAL
164	SCREW, SERVO PISTON ADJUSTING
165	NUT, SERVO PISTON ADJUSTING SCREW
166	PISTON ASSEMBLY, SERVO
167	RING, SERVO PISTON RETAINING
168	GASKET, SERVO PISTON COVER
169	COVER, SERVO PISTON
170	GASKET, OIL PAN
171	MAGNET, OIL PAN
172	PAN, OIL
173	SCREW, OIL PAN TO CASE
†174	GASKET, OIL DRAIN PLUG
†175	PLUG, OIL DRAIN
†176	SWITCH, OIL PRESSURE
†177	DRIVE FLANGE
†178	O-RING, DRIVE FLANGE
†179	SPACER, DRIVE FLANGE
†180	CIRCLIP, DRIVE FLANGE
†181	WASHER, DRIVE FLANGE
†182	BOLT, DRIVE FLANGE
†183	WASHER
†184	CLIPS
†185	BREATHER, REAR
†186	BAFFLE PLATE
†187	SCREW, SELF TAPPING
188	SPRING, SERVO CUSHION
193	BALL, CHECK
601	RING, SEAL
602	GEAR, SPEEDOMETER DRIVEN
603	GUIDE, SPEEDO DRIVEN GEAR
604	BUSHING, SPEEDO GUIDE
605	SCREW, SPEEDO BRACKET
606	WASHER, SPEEDO BRACKET
607	BRACKET, SPEEDO AND GUIDE

NOTE: §: 245MM CONVERTER CLUTCH MODELS ONLY
†: OPTIONAL
‡: 245MM DIESEL CONVERTER CLUTCH MODELS ONLY

PH0106-3L30

Figure 73 Case, Valve Body and Lo Servo Piston – Legend

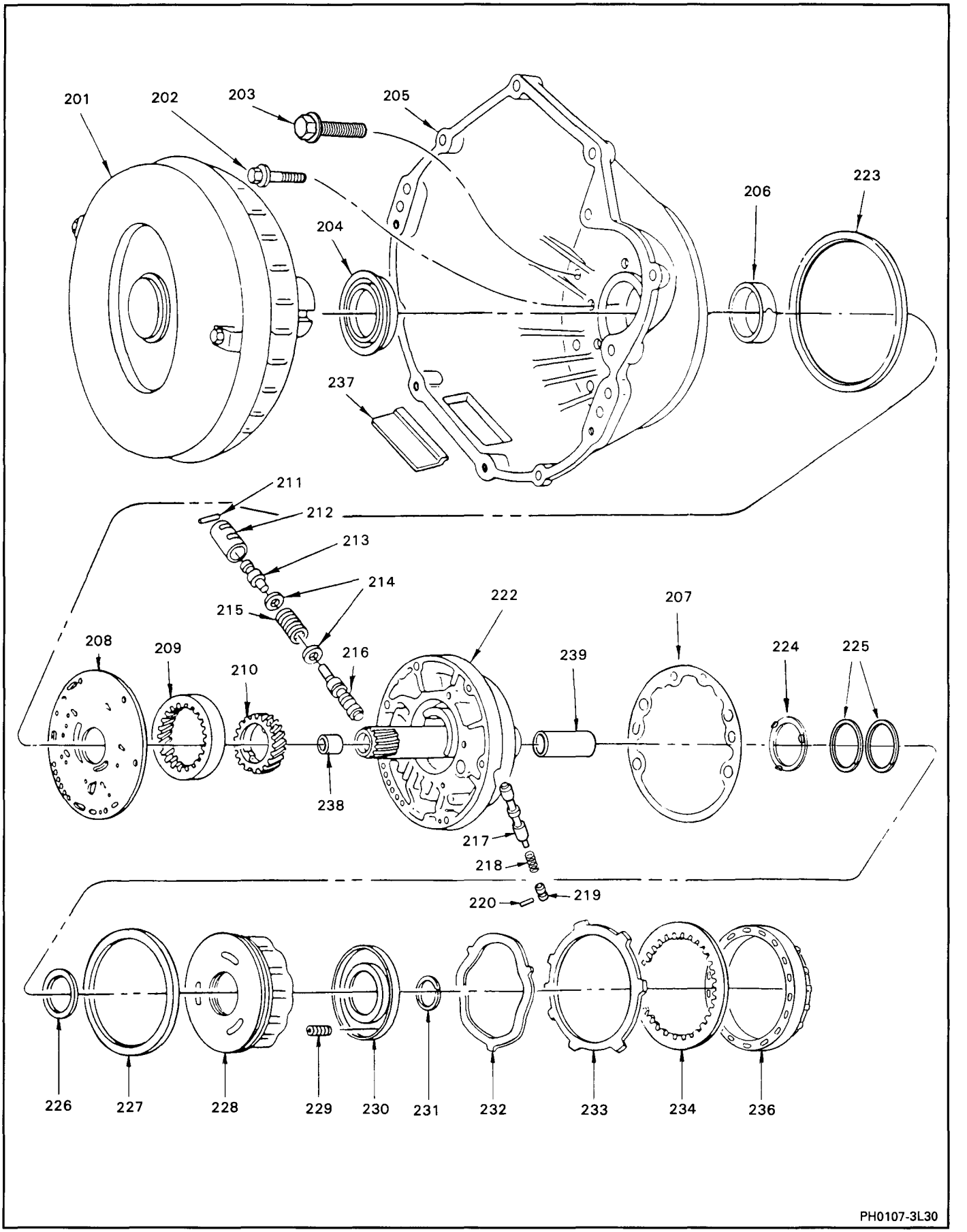

Figure 74 Converter, Pump Assembly and Reverse Clutch

ILL. NO.	DESCRIPTION
201	CONVERTER ASSEMBLY
202	BOLT, CONVERTER HOUSING TO OIL PUMP
203	BOLT, CONVERTER HOUSING TO CASE
204	SEAL, CONVERTER HOUSING
205	HOUSING, CONVERTER
206	BUSHING, CONVERTER HOUSING
207	GASKET, OIL PUMP
208	PLATE, OIL PUMP WEIR
209	GEAR, PUMP DRIVEN
210	GEAR, PUMP DRIVE
211	PIN, OIL PUMP BOOST SLEEVE RETAINER
212	SLEEVE, OIL PUMP BOOST
213	VALVE, OIL PUMP BOOST
214	SEAT, PRESSURE REGULATOR VALVE SPRING
215	SPRING, PRESSURE REGULATOR VALVE
216	VALVE, PRESSURE
§217	VALVE, CLUTCH CONTROL
§218	SPRING, CLUTCH CONTROL VALVE
§219	PLUG, CLUTCH CONTROL VALVE
§220	PIN, CLUTCH CONTROL VALVE
222	BODY, OIL PUMP
223	SEAL, OIL PUMP (OUTER)
224	WASHER, SELECTIVE THRUST
225	RING, 2ND CLUTCH OIL SEAL
226	SEAL, REVERSE CLUTCH PISTON (INNER)
227	SEAL, REVERSE CLUTCH PISTON (OUTER)
228	PISTON, REVERSE CLUTCH
229	SPRING, CLUTCH PISTON RETURN
230	SEAT, REVERSE CLUTCH PISTON RETURN SPRING
231	RING, CLUTCH PISTON SPRING SEAT RETAINER
232	PLATE, REVERSE CLUTCH CUSHION
233	PLATE, REVERSE CLUTCH (FLAT STEEL)
234	PLATE, REVERSE CLUTCH (LINED)
236	PLATE, REVERSE CLUTCH PRESSURE
†237	COVER, PLASTIC
238	BUSHING, OIL PUMP HUB (FRONT)
239	BUSHING, OIL PUMP BODY (REAR)

NOTE: §: 245MM CONVERTER CLUTCH MODELS ONLY
†: OPTIONAL

LH0108-3L30

Figure 75 Converter, Pump Assembly and Reverse Clutch – Legend

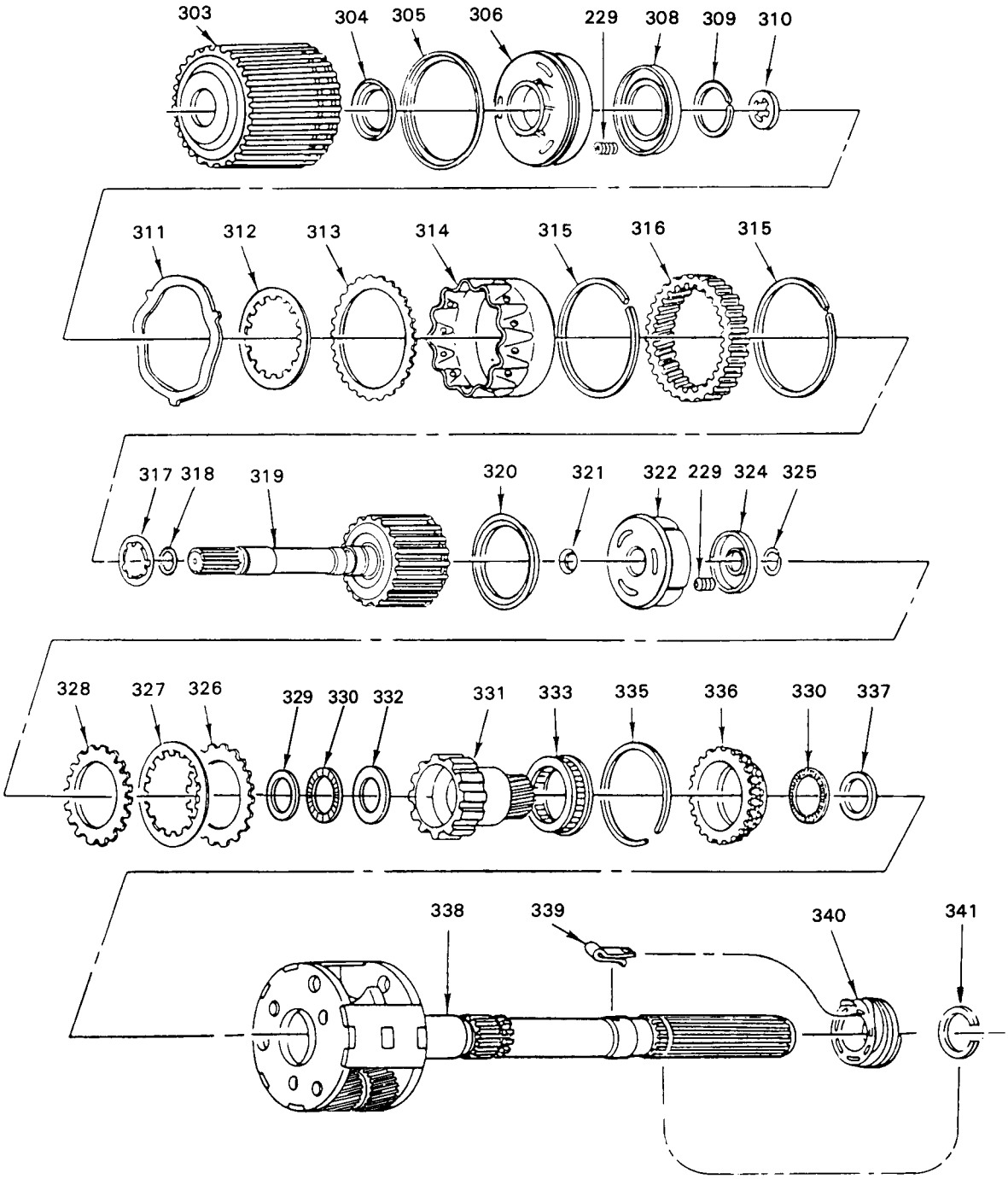

PH0109-3L30

Figure 76 Clutch, Sun Gear and Planetary Carrier

§229 SPRING, CLUTCH PISTON RETURN
229 SPRING, CLUTCH PISTON RETURN
303 DRUM, 2ND CLUTCH
304 SEAL, 2ND CLUTCH PISTON (INNER)
305 SEAL, 2ND CLUTCH PISTON (OUTER)
306 PISTON, 2ND CLUTCH
308 SEAT, 2ND CLUTCH PISTON SPRING RETAINER
309 RING, CLUTCH PISTON SPRING SEAT RETAINER
310 WASHER, 2ND TO 3RD CLUTCH THRUST
311 PLATE, 2ND CLUTCH (WAVED)
312 PLATE, 2ND CLUTCH (LINED)
313 PLATE, 2ND CLUTCH (STEEL)
314 SPACER, 2ND CLUTCH
315 RING, RING GEAR RETAINER
316 GEAR, RING
317 WASHER, 2ND TO 3RD CLUTCH THRUST
§318 O-RING
319 SHAFT, INPUT
320 SEAL, 3RD CLUTCH PISTON (OUTER)
321 SEAL, 3RD CLUTCH PISTON (INNER)
322 PISTON, 3RD CLUTCH
324 SEAT, 3RD CLUTCH PISTON SPRING RETAINER
325 RING, CLUTCH PISTON SPRING SEAT RETAINER
326 PLATE, 3RD CLUTCH (STEEL)
327 PLATE, 3RD CLUTCH (LINED)
328 PLATE, 3RD CLUTCH (WAVED)
329 WASHER, INPUT SHAFT TO SUN GEAR
330 BEARING, INPUT SUN GEAR
331 GEAR, INPUT SUN
332 WASHER, INPUT SHAFT TO SUN GEAR
333 SPRAG ASSEMBLY, COMPLETE
335 RING, RACE RETAINING
336 RACE, 3RD CLUTCH INPUT SPRAG
337 WASHER, INPUT GEAR TO CARRIER
338 PLANETARY CARRIER ASSEMBLY
339 CLIP, SPEEDO DRIVE GEAR
340 GEAR, SPEEDO DRIVE
†341 RING, RETAINING

NOTE: §: 245mm CONVERTER CLUTCH MODELS ONLY
†: OPTIONAL

PH0110-3L30

Figure 77 Clutch Sun Gear and Planetary Carrier – Legend

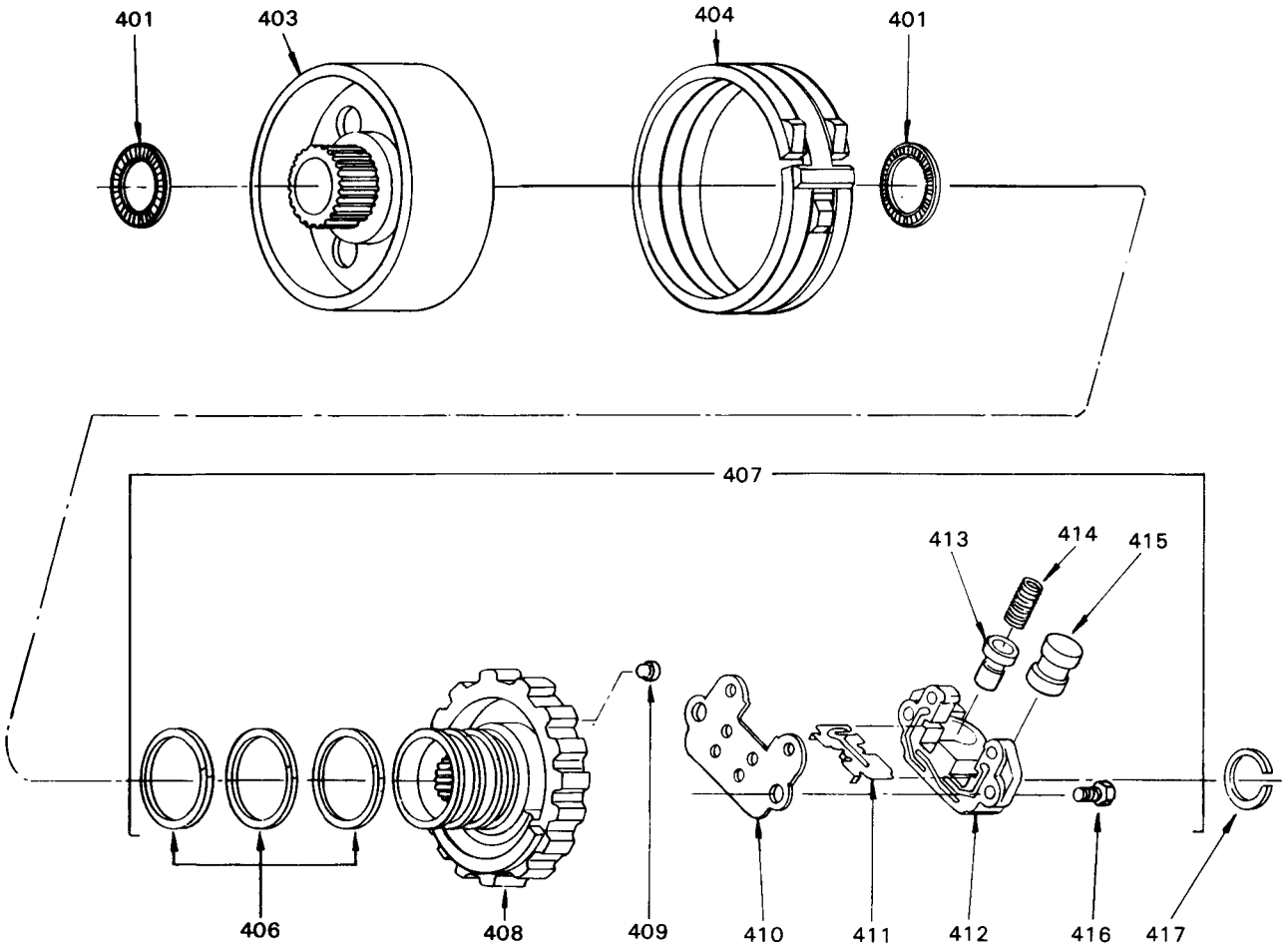

401 BEARING, REACTION SUN GEAR
403 DRUM AND GEAR REACTION SUN ASSEMBLY
404 BAND, BRAKE
406 RING, GOVERNOR SEAL
407 GOVERNOR ASSEMBLY
408 HUB, GOVERNOR
409 SCREEN, GOVERNOR OIL
410 GASKET, GOVERNOR
411 RETAINER, SECONDARY VALVE
412 BODY, GOVERNOR
413 VALVE, SECONDARY
414 SPRING, SECONDARY
415 VALVE, PRIMARY
416 SCREW, GOVERNOR
417 RING, GOVERNOR

PH0111-3L30

Figure 78 Reaction Sun Gear and Governor

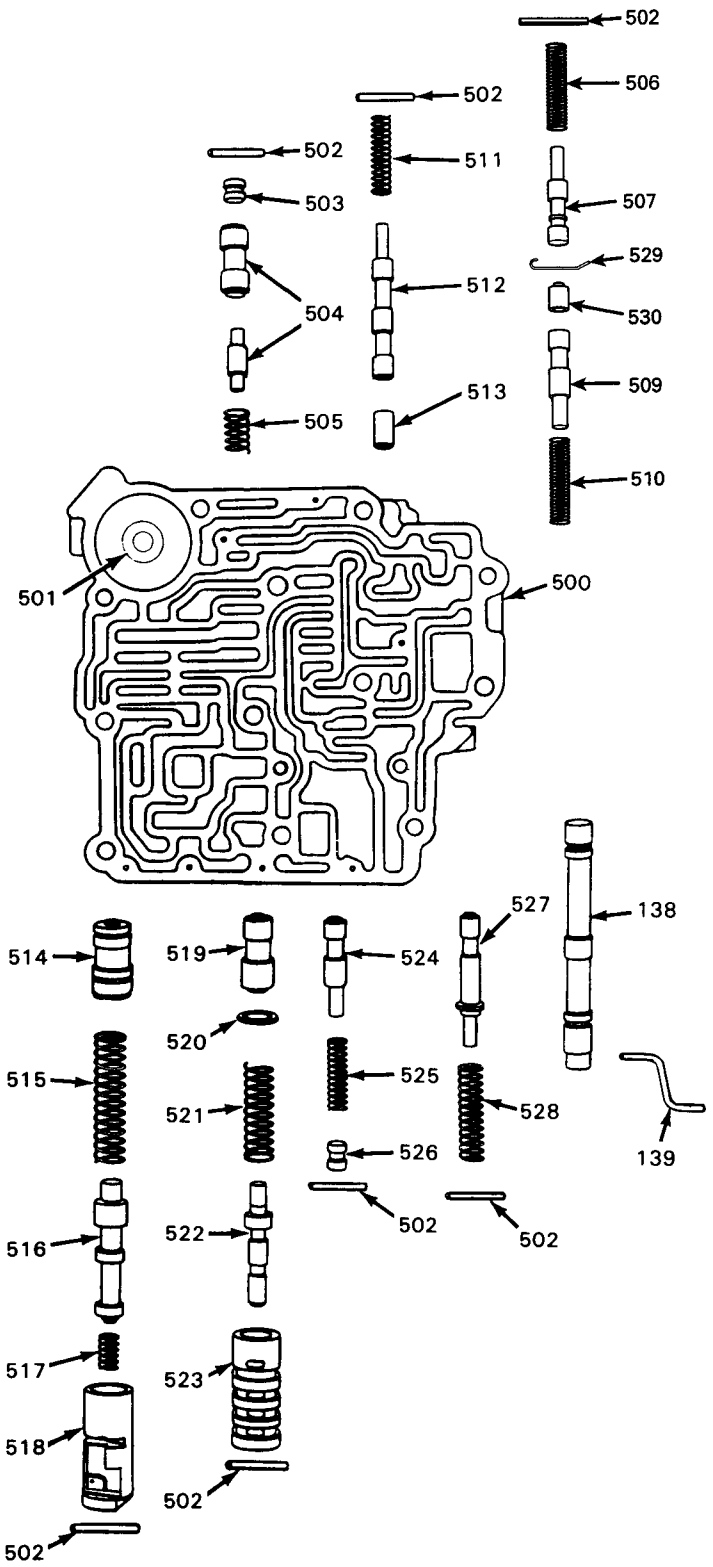

138 VALVE, MANUAL
139 LINK, MANUAL
500 BODY, CONTROL VALVE
501 1-2 ACCUMULATOR PISTON ASSEMBLY
502 PIN, RETAINING
503 PLUG, 1-2 ACCUMULATOR VALVE
504 VALVE, 1-2 ACCUMULATOR
505 SPRING, 1-2 ACCUMULATOR VALVE 1/2" X 1-1/16"
506 SPRING, DOWNSHIFT TIMING VALVE (HIGH SPEED) 7/16" X 1-5/16"
507 VALVE, DOWNSHIFT TIMING (HIGH SPEED)
509 VALVE, DOWNSHIFT TIMING (LOW SPEED)
510 SPRING, DOWNSHIFT TIMING VALVE (LOW SPEED) 7/16" X 1-3/8"
511 SPRING, MANUAL LOW CONTROL VALVE 7/16" X 1-5/16"
512 VALVE, MANUAL LOW CONTROL
513 VALVE, REVERSE CONTROL
514 VALVE, 1-2 SHIFT
515 SPRING, 1-2 SHIFT CONTROL VALVE 3/4" X 2-7/16"
516 VALVE, 1-2 SHIFT CONTROL
517 SPRING, 1-2 SHIFT CONTROL VALVE
518 SLEEVE, 1-2 SHIFT CONTROL VALVE
519 VALVE, 2-3 SHIFT
520 SEAT, 2-3 SHIFT CONTROL VALVE SPRING
521 SPRING, 2-3 SHIFT CONTROL VALVE 11/16" X 1-3/4"
522 VALVE, 2-3 SHIFT CONTROL
523 SLEEVE, 2-3 SHIFT CONTROL VALVE
524 VALVE, 3-2 CONTROL
525 SPRING, 3-2 CONTROL VALVE 7/16" X 1-3/4"
526 PLUG, 3-2 CONTROL VALVE
527 VALVE, DETENT PRESSURE REGULATOR
528 SPRING, DETENT PRESSURE REGULATOR VALVE 1/2" X 1-5/8"
529 RETAINER, VALVE
530 VALVE, INTERMEDIATE

PH0099-3L30

Figure 79 Typical Valve Body

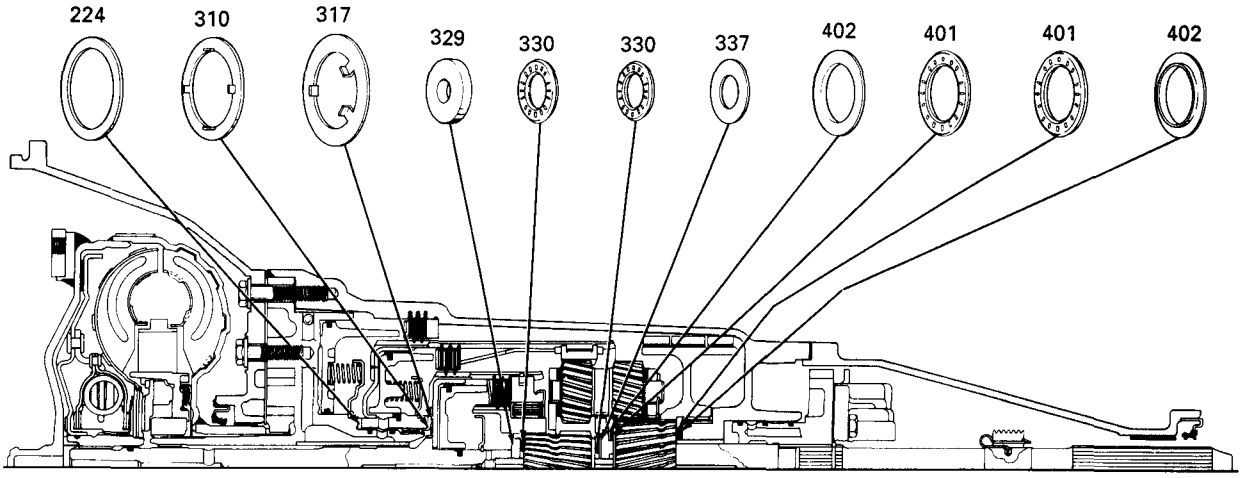

224 WASHER, SELECTIVE THRUST
310 WASHER, 2ND TO 3RD CLUTCH THRUST
317 WASHER, 2ND TO 3RD CLUTCH THRUST
329 WASHER, INPUT SHAFT TO SUN GEAR
330 BEARING, INPUT SUN GEAR
337 WASHER, INPUT GEAR TO CARRIER
401 BEARING, REACTION SUN GEAR
402 WASHER, REACTION SUN GEAR

PH0112-3L30

Figure 80 Washer and Bearing Location

SPECIFICATIONS

FASTENER TIGHTENING SPECIFICATIONS

TORQUE SPECIFICATIONS

ITEM	N·m	LB.-FT.
OIL PAN-TO-CASE	11	8
MODULATOR ASSEMBLY	52	33
EXTENSION HOUSING-TO-CASE	31	23
OIL PRESSURE CHECK PLUG	8	6
CONVERTER HOUSING-TO-CYLINDER BLOCK	34	25
TRANSMISSION SUPPORT-TO-EXTENSION	44	33
SHIFT LEVER-TO-SELECTOR LEVER SHAFT	27	20
DETENT CABLE, RETAINER-TO-CASE	9	6
OIL COOLER FITTINGS-TO-CASE	20	15
OIL COOLER FITTINGS-TO-RADIATOR	27	20
OIL COOLER HOSE CLAMPS-TO-COOLER LINES	1	7
SHIFTER ASSEMBLY-TO-CONSOLE	9	7
NEUTRAL SAFETY SWITCH-TO-BRACKET	2	1
LOWER COVER-TO-CONVERTER HOUSING	10	7
FLEXPLATE-TO-CONVERTER	48	35
TRANSFER PLATE-TO-VALVE BODY	9	7
REINFORCEMENT PLATE-TO-CASE	19	14
VALVE BODY-TO-CASE	19	14
SERVO COVER-TO-CASE	24	18
CONVERTER HOUSING-TO-OIL PUMP	19	14
CONVERTER HOUSING-TO-CASE	33	25
SELECTOR LEVER LOCKNUT	12	9
GOVERNOR BODY-TO-GOVERNOR HUB	8	6
SERVO ADJUSTING BOLT LOCKNUT	18	14
GOVERNOR PRESSURE SWITCH	10	7
SOLENOID	19	14
OIL STRAINER	18.9	14

LH0125-3L30

SPECIAL TOOLS

J 8763-1

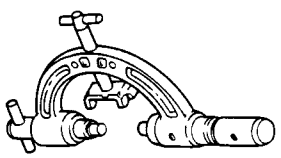

TRANSMISSION HOLDING FIXTURE

J 21369

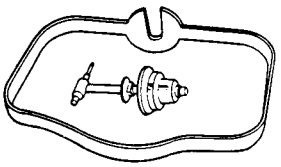

CONVERTER LEAK TEST FIXTURE

J 8400-1

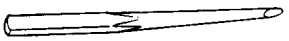

CAPE CHISEL

J 3289-20

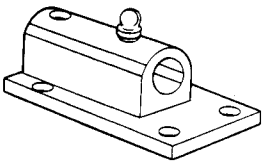

HOLDING FIXTURE BASE

J 23130-3

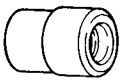

REAR CASE BUSHING REMOVER/INSTALLER

J 8092

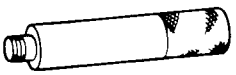

DRIVE HANDLE

J 21359

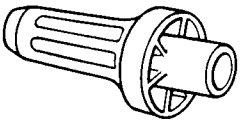

CONVERTER HOUSING OIL SEAL INSTALLER

J 21426

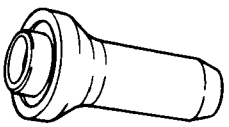

EXTENSION HOUSING OIL SEAL INSTALLER

J 23129

CONVERTER HOUSING SEAL REMOVER

J 23327

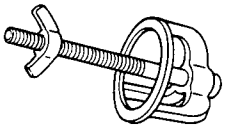

CLUTCH PISTON COMPRESSOR

J 23130-7

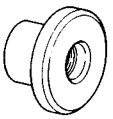

REACTION SUN GEAR DRUM BUSHING SLEEVE INSTALLER

J 38428 J 23075

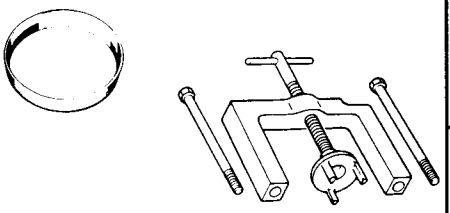

SERVO/3RD CLUTCH PISTON SPRING COMPRESSOR

J 23130-5

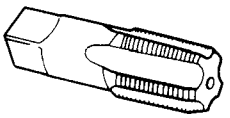

OIL PUMP BUSHING REMOVER (3/4 - 14 NPT)

J 23130-6

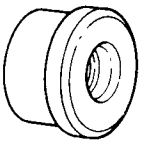

2ND CLUTCH DRUM BUSHING REMOVER/INSTALLER

J 23130-1

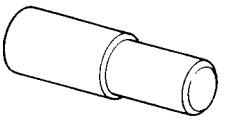

OIL PUMP BUSHING INSTALLER

J 21424-9

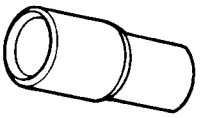

EXTENSION HOUSING BUSHING REMOVER/INSTALLER

J 7004

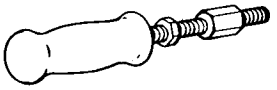

SLIDE HAMMER

J 21465-17

CONVERTER HOUSING BUSHING REMOVER/INSTALLER

J 23080-A

2ND CLUTCH PISTON SEAL INSTALLER

J 29369-1

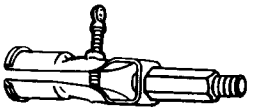

BUSHING REMOVER

J 23130-2

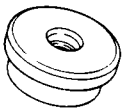

REACTION SUN GEAR DRUM BUSHING INSTALLER

J 23082-1

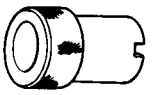

CONVERTER TO OIL PUMP ALIGNMENT TOOL

J 23100

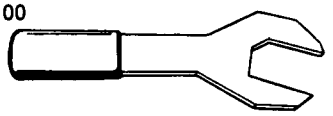

VACUUM MODULATOR WRENCH

J 38450

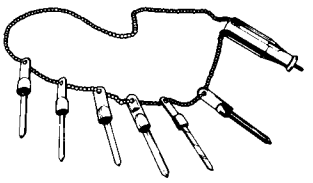

SPRAG RETAINER RING REMOVER

J 25019-2

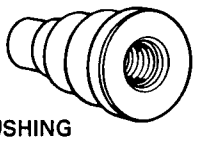

OIL PUMP BUSHING INSTALLER (FRONT)

J 8059

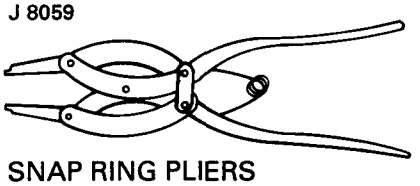

SNAP RING PLIERS

J 25019-2

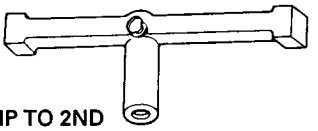

OIL PUMP TO 2ND CLUTCH DRUM GAGING TOOL

LH0126-3L30-R1

SECTION 7B

MANUAL TRANSMISSION

NOTICE: When fasteners are removed, always reinstall them at the same location from which they were removed. If a fastener needs to be replaced, use the correct part number fastener for that application. If the correct part number fastener is not available, a fastener of equal size and strength (or stronger) may be used. Fasteners that are not reused, and those requiring thread-locking compound, will be called out. The correct torque values must be used when installing fasteners that require them. If the above procedures are not followed, parts or system damage could result.

CONTENTS

Transmission Identification Information 7B-1
General Description 7B-2
Synchronizers 7B-5
Gearshift Controls 7B-10
Reverse Gearshift Limit Yoke 7B-10
Diagnosis 7B-12
Clutch Spin Down Time 7B-12
Isolating Noise 7B-12
Oil Leak Diagnosis 7B-14
General Method 7B-16
Powder Method 7B-16
Dye and Black Light Method 7B-16
Transmission Oil Leak Repair 7B-16
Case Porosity Repair 7B-16
On-Vehicle Service 7B-16
Checking Transmission Oil Level 7B-16
Transmission Oil Change Procedure 7B-17
Rear Transmission Mount (Two-Wheel Drive Models) 7B-17
Gearshift Control Lever 7B-19
Extension Case Oil Seal (Two-Wheel Drive Models) 7B-21
Backup Lamp Switch 7B-21
Speedometer Driven Gear (Two-Wheel Drive Models) 7B-22
Speedometer Cable 7B-23
Extension Case (Two-Wheel Drive Models) 7B-23
Speedometer Drive Gear (Two-Wheel Drive Models) 7B-26
Gearshift Lever Case Removal (Two-Wheel Drive Models) 7B-26
Gearshift Lever Case Disassembly (Two-Wheel Drive Models) 7B-27
Gearshift Lever Case Assembly (Two-Wheel Drive Models) 7B-29
Gearshift Lever Case Installation (Two-Wheel Drive Models) 7B-29
Rear Case, Rear Case Oil Seal, and Rear Case Countershaft Plug (Four-Wheel Drive Models). 7B-30
Gearshift Lever Case Removal (Four-Wheel Drive Models) 7B-33
Gearshift Lever Case Disassembly (Four-Wheel Drive Models) 7B-33
Gearshift Lever Case Assembly (Four-Wheel Drive Models) 7B-35
Gearshift Lever Case Installation (Four-Wheel Drive Models) 7B-36
Transmission Assembly 7B-37
Specifications 7B-41
Fastener Torques 7B-41
Oil Capacity (approximate) 7B-41
Service Parts Information 7B-41
Special Tools 7B-43

TRANSMISSION IDENTIFICATION INFORMATION

The manual transmission identification number is located on the top of the upper case directly behind the clutch housing (Figure 1). This seven digit number is stamped into the upper case and refers to model year and serial number sequence. Additional transmission identification can be found on the service parts identification label (Figure 2). This label contains information on regular production options (RPO) as well as standard and mandatory options. This label is affixed to the inside of the glove box door of each vehicle at the assembly plant. For additional information on the service parts identification label, refer to SECTION 0A.

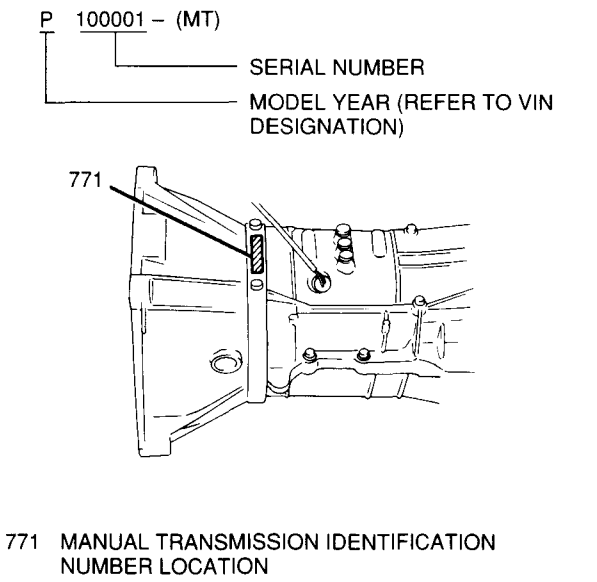

Figure 1 Manual Transmission Identification Number

GENERAL DESCRIPTION

The Suzuki 5-speed manual transmission assembly is a constant-mesh design that consists of an input shaft, main shaft, countershaft and reverse gear. Gear selection and shifting are accomplished by synchronizers and synchronizer rings which are moved by shift forks that slide on their respective gearshift shafts. These synchronizers help to mesh the appropriate gears in order to obtain a gearshift. Reverse gear utilizes an idler gear supported on a sliding spindle idler shaft and is non-synchronized (Figures 3 and 4).

This design is available in two-wheel drive models and four-wheel drive models. The two-wheel drive model uses an extension case to house the speedometer drive and driven gears which are driven by the transmission main shaft. The four-wheel drive model uses a rear case mated with the transmission upper and lower cases and the transfer case. The speedometer drive and driven gears on the four-wheel drive model are located in the transfer case.

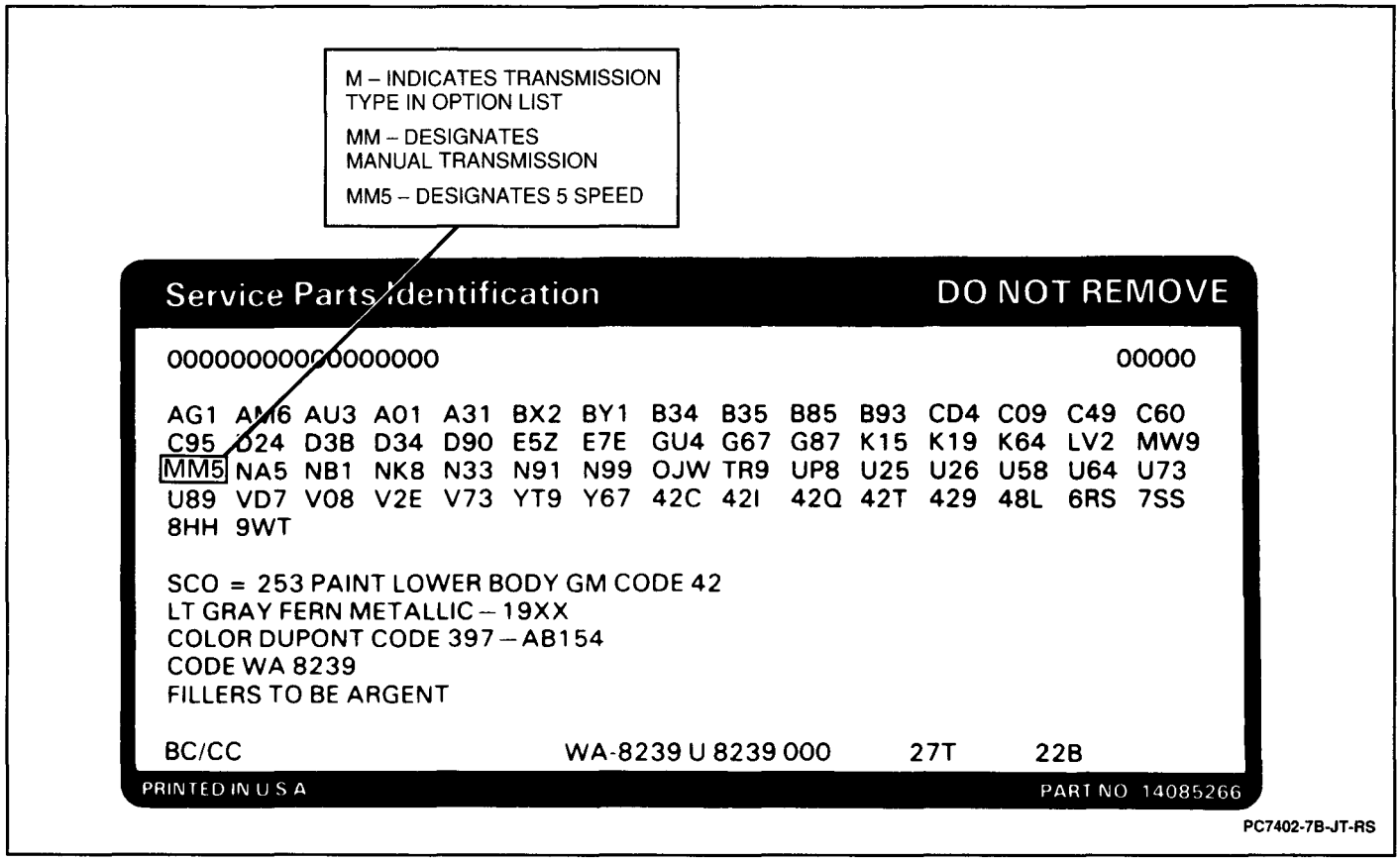

Figure 2 Service Parts Identification Label

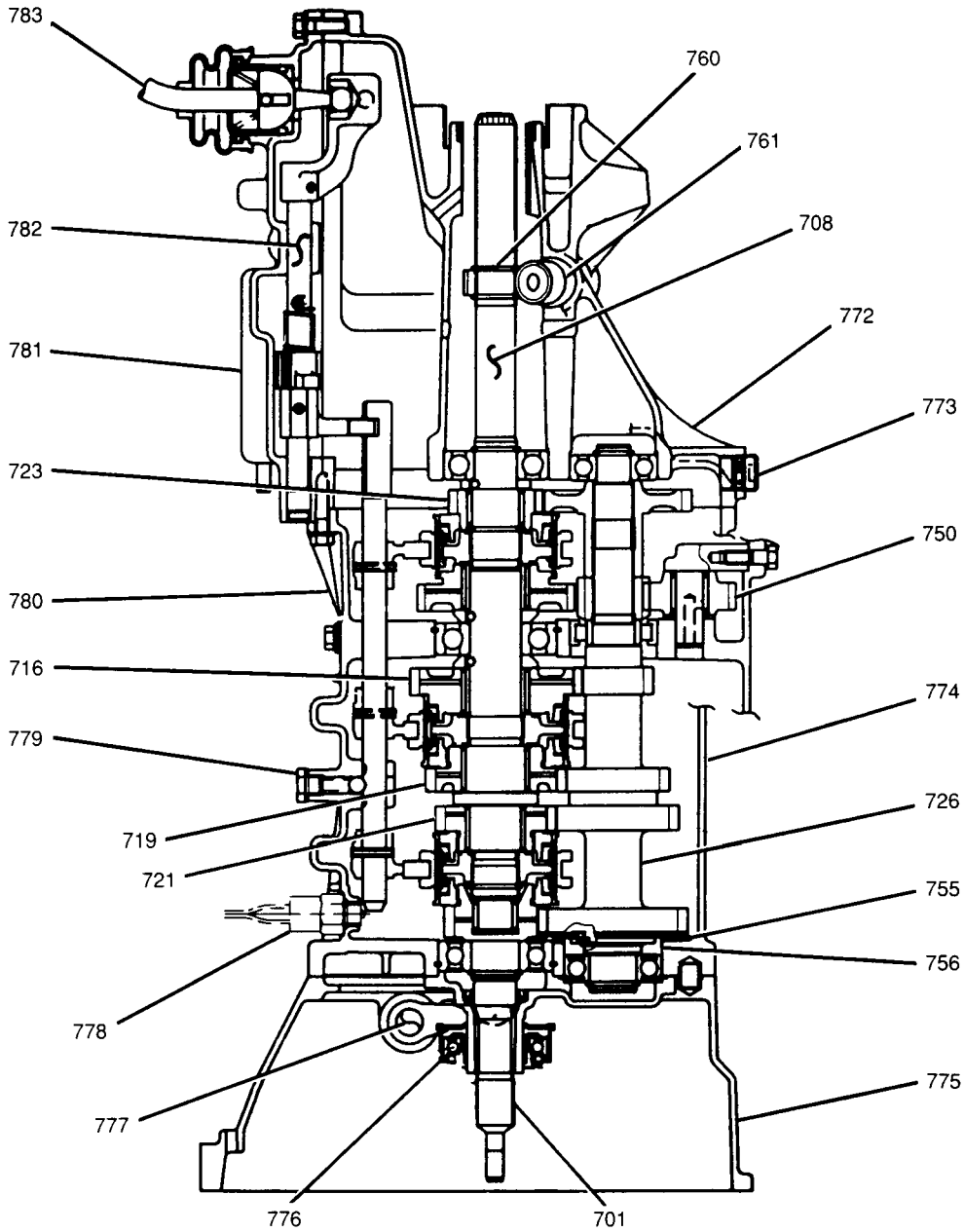

701	INPUT SHAFT	772	EXTENSION CASE
708	MAIN SHAFT	773	TRANSMISSION DRAIN PLUG
716	MAIN SHAFT 1ST GEAR	774	LOWER CASE
719	MAIN SHAFT 2ND GEAR	775	CLUTCH HOUSING
721	MAIN SHAFT 3RD GEAR	776	CLUTCH RELEASE BEARING
723	MAIN SHAFT 5TH GEAR	777	CLUTCH RELEASE SHAFT
726	COUNTERSHAFT	778	BACKUP LAMP SWITCH
750	REVERSE IDLER GEAR	779	LOCATING SPRING BOLT
755	FRICTION GEAR	780	UPPER CASE
756	FRICTION GEAR RETAINER	781	GEARSHIFT LEVER CASE
760	SPEEDOMETER DRIVE GEAR	782	GEARSHIFT SHAFT
761	SPEEDOMETER DRIVEN GEAR	783	GEARSHIFT CONTROL LEVER

NC7403-7B-JT-RS

Figure 3 Manual Transmission Construction (Two-Wheel Drive Models)

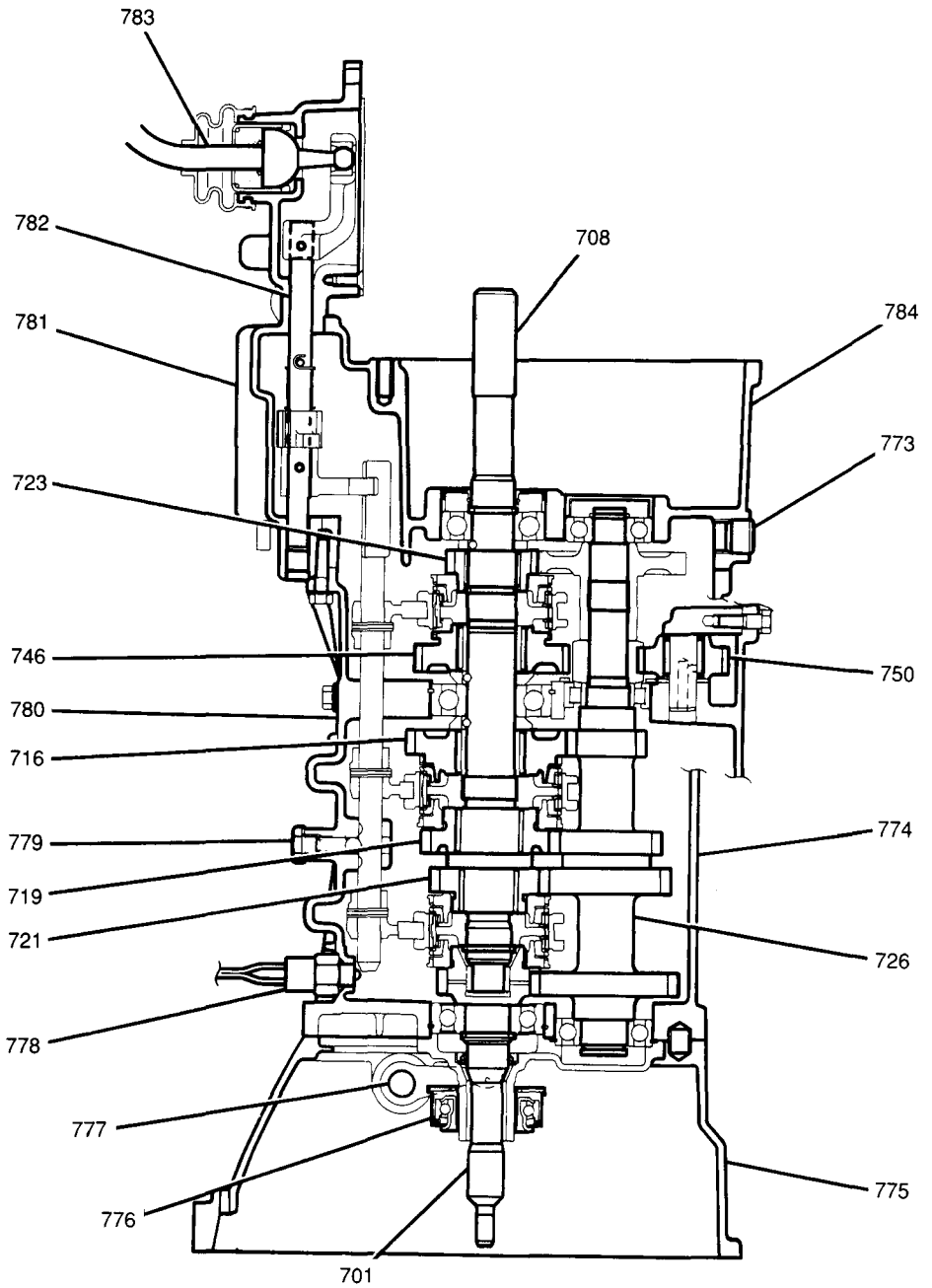

701	INPUT SHAFT	775	CLUTCH HOUSING
708	MAIN SHAFT	776	CLUTCH RELEASE BEARING
716	MAIN SHAFT 1ST GEAR	777	CLUTCH RELEASE SHAFT
719	MAIN SHAFT 2ND GEAR	778	BACKUP LAMP SWITCH
721	MAIN SHAFT 3RD GEAR	779	LOCATING SPRING BOLT
723	MAIN SHAFT 5TH GEAR	780	UPPER CASE
726	COUNTERSHAFT	781	GEARSHIFT LEVER CASE
746	MAIN SHAFT REVERSE GEAR	782	GEARSHIFT SHAFT
750	REVERSE IDLER GEAR	783	GEARSHIFT CONTROL LEVER
773	TRANSMISSION DRAIN PLUG	784	REAR CASE
774	LOWER CASE		

PC7404-7B-JT-RS

Figure 4 Manual Transmission Construction (Four-Wheel Drive Models)

SYNCHRONIZERS

Figures 5 through 8

The low speed synchronizer is mounted on the main shaft and will engage with either the main shaft 1st or main shaft 2nd gear. The high speed synchronizer is also mounted on the main shaft and will engage with either the main shaft 3rd or input shaft 4th gear. The reverse synchronizer is mounted on the main shaft and engages with the main shaft 5th or main shaft reverse gear. The countershaft meshes with the main shaft to produce the appropriate gear ratio output (Figures 5 through 8).

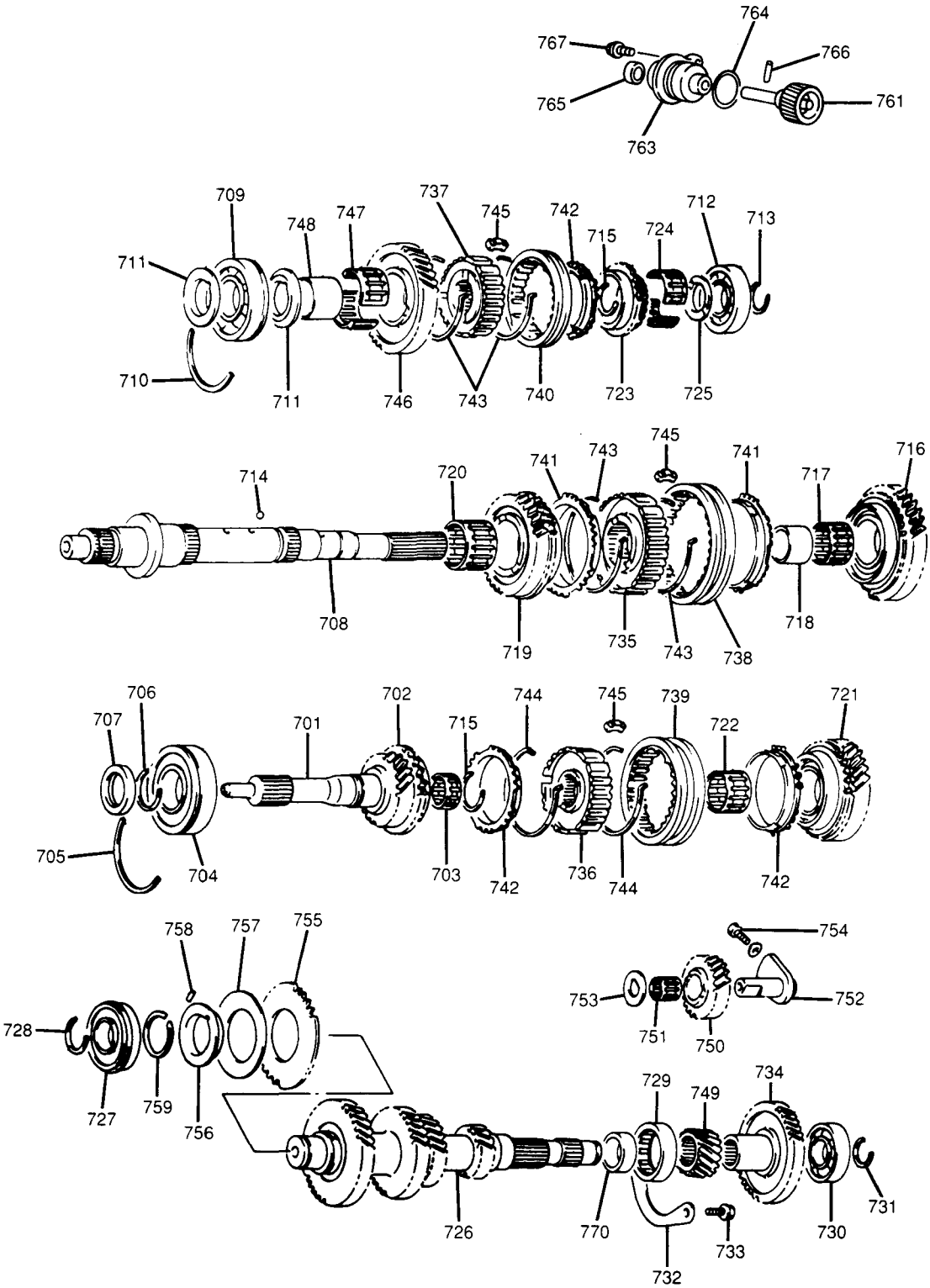

Figure 5 Internal Gear Components (Two-Wheel Drive Models)

701 INPUT SHAFT
702 INPUT SHAFT 4TH GEAR
703 INPUT SHAFT NEEDLE BEARING
704 FRONT INPUT SHAFT BEARING
705 FRONT INPUT SHAFT BEARING C-RING
706 FRONT INPUT SHAFT BEARING C-CLIP
707 FRONT INPUT SHAFT OIL SEAL
708 MAIN SHAFT
709 MAIN SHAFT CENTER BEARING
710 MAIN SHAFT CENTER BEARING C-RING
711 MAIN SHAFT BEARING WASHER
712 MAIN SHAFT REAR BEARING
713 MAIN SHAFT REAR BEARING C-CLIP
714 MAIN SHAFT WASHER BALL
715 HIGH SPEED AND REVERSE HUB C-CLIP
716 MAIN SHAFT 1ST GEAR
717 MAIN SHAFT 1ST GEAR NEEDLE BEARING
718 MAIN SHAFT 1ST GEAR BUSHING
719 MAIN SHAFT 2ND GEAR
720 MAIN SHAFT 2ND GEAR NEEDLE BEARING
721 MAIN SHAFT 3RD GEAR
722 MAIN SHAFT 3RD GEAR NEEDLE BEARING
723 MAIN SHAFT 5TH GEAR
724 MAIN SHAFT 5TH GEAR NEEDLE BEARING
725 MAIN SHAFT 5TH GEAR WASHER
726 COUNTERSHAFT
727 FRONT COUNTERSHAFT BEARING
728 FRONT COUNTERSHAFT BEARING C-CLIP
729 COUNTERSHAFT CENTER BEARING
730 REAR COUNTERSHAFT BEARING
731 REAR COUNTERSHAFT BEARING C-CLIP
732 COUNTERSHAFT CENTER BEARING PLATE
733 COUNTERSHAFT CENTER BEARING PLATE BOLT
734 COUNTERSHAFT 5TH GEAR
735 LOW SPEED SYNCHRONIZER HUB
736 HIGH SPEED SYNCHRONIZER HUB
737 REVERSE SYNCHRONIZER HUB
738 LOW SPEED SYNCHRONIZER SLEEVE
739 HIGH SPEED SYNCHRONIZER SLEEVE
740 REVERSE SYNCHRONIZER SLEEVE
741 LOW SPEED SYNCHRONIZER RING
742 HIGH SPEED SYNCHRONIZER RING
743 LOW SPEED SYNCHRONIZER SPRING
744 HIGH SPEED SYNCHRONIZER SPRING
745 SYNCHRONIZER KEY
746 MAIN SHAFT REVERSE GEAR
747 MAIN SHAFT REVERSE GEAR NEEDLE BEARING
748 MAIN SHAFT REVERSE GEAR BUSHING
749 COUNTERSHAFT REVERSE GEAR
750 REVERSE IDLER GEAR
751 REVERSE IDLER GEAR NEEDLE BEARING
752 REVERSE IDLER SHAFT
753 REVERSE IDLER GEAR THRUST WASHER
754 REVERSE IDLER SHAFT BOLT
755 FRICTION GEAR
756 FRICTION GEAR RETAINER
757 FRICTION GEAR SPRING
758 FRICTION GEAR RETAINER PIN
759 FRICTION GEAR SNAP RING
760 SPEEDOMETER DRIVE GEAR
761 SPEEDOMETER DRIVEN GEAR
762 SPEEDOMETER DRIVE GEAR RETAINING RING
763 SPEEDOMETER DRIVEN GEAR CASE
764 SPEEDOMETER DRIVEN GEAR CASE O-RING
765 SPEEDOMETER DRIVEN GEAR LIP SEAL
766 SPEEDOMETER DRIVEN GEAR ROLL PIN
767 SPEEDOMETER DRIVEN GEAR CASE RETAINING BOLT
770 COUNTERSHAFT CENTER BEARING BUSHING

NC0776-7B-JT-RS

Figure 6 Internal Gear Components (Two-Wheel Drive Models) — Legend

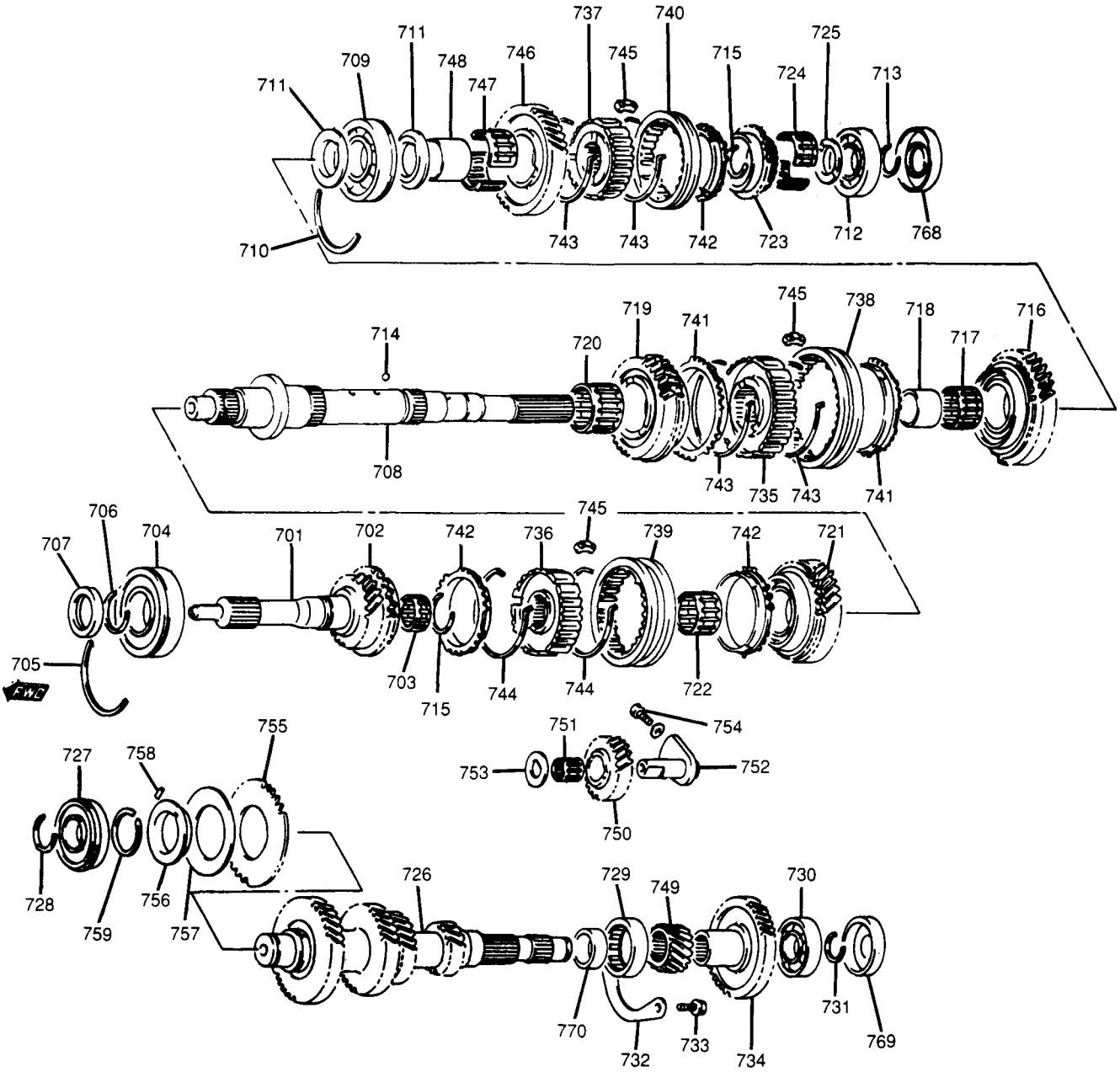

Figure 7 Internal Gear Components (Four-Wheel Drive Models)

701 INPUT SHAFT
702 INPUT SHAFT 4TH GEAR
703 INPUT SHAFT NEEDLE BEARING
704 FRONT INPUT SHAFT BEARING
705 FRONT INPUT SHAFT BEARING C-RING
706 FRONT INPUT SHAFT BEARING C-CLIP
707 FRONT INPUT SHAFT OIL SEAL
708 MAIN SHAFT
709 MAIN SHAFT CENTER BEARING
710 MAIN SHAFT CENTER BEARING C-RING
711 MAIN SHAFT BEARING WASHER
712 MAIN SHAFT REAR BEARING
713 MAIN SHAFT REAR BEARING C-CLIP
714 MAIN SHAFT WASHER BALL
715 HIGH SPEED AND REVERSE HUB C-CLIP
716 MAIN SHAFT 1ST GEAR
717 MAIN SHAFT 1ST GEAR NEEDLE BEARING
718 MAIN SHAFT 1ST GEAR BUSHING
719 MAIN SHAFT 2ND GEAR
720 MAIN SHAFT 2ND GEAR NEEDLE BEARING
721 MAIN SHAFT 3RD GEAR
722 MAIN SHAFT 3RD GEAR NEEDLE BEARING
723 MAIN SHAFT 5TH GEAR
724 MAIN SHAFT 5TH GEAR NEEDLE BEARING
725 MAIN SHAFT 5TH GEAR WASHER
726 COUNTERSHAFT
727 FRONT COUNTERSHAFT BEARING
728 FRONT COUNTERSHAFT BEARING C-CLIP
729 COUNTERSHAFT CENTER BEARING
730 REAR COUNTERSHAFT BEARING
731 REAR COUNTERSHAFT BEARING C-CLIP
732 COUNTERSHAFT CENTER BEARING PLATE
733 COUNTERSHAFT CENTER BEARING PLATE BOLT
734 COUNTERSHAFT 5TH GEAR
735 LOW SPEED SYNCHRONIZER HUB
736 HIGH SPEED SYNCHRONIZER HUB
737 REVERSE SYNCHRONIZER HUB
738 LOW SPEED SYNCHRONIZER SLEEVE
739 HIGH SPEED SYNCHRONIZER SLEEVE
740 REVERSE SYNCHRONIZER SLEEVE
741 LOW SPEED SYNCHRONIZER RING
742 HIGH SPEED SYNCHRONIZER RING
743 LOW SPEED SYNCHRONIZER SPRING
744 HIGH SPEED SYNCHRONIZER SPRING
745 SYNCHRONIZER KEY
746 MAIN SHAFT REVERSE GEAR
747 MAIN SHAFT REVERSE GEAR NEEDLE BEARING
748 MAIN SHAFT REVERSE GEAR BUSHING
749 COUNTERSHAFT REVERSE GEAR
750 REVERSE IDLER GEAR
751 REVERSE IDLER GEAR NEEDLE BEARING
752 REVERSE IDLER SHAFT
753 REVERSE IDLER GEAR THRUST WASHER
754 REVERSE IDLER SHAFT BOLT
755 FRICTION GEAR
756 FRICTION GEAR RETAINER
757 FRICTION GEAR SPRING
758 FRICTION GEAR RETAINER PIN
759 FRICTION GEAR SNAP RING
768 REAR CASE OIL SEAL
769 REAR CASE COUNTERSHAFT PLUG
770 COUNTERSHAFT CENTER BEARING BUSHING

NC0778-7B-JT-RS

Figure 8 Internal Gear Components (Four-Wheel Drive Models) — Legend

GEARSHIFT CONTROLS

Figures 9 and 10

Gear selection is transmitted from the gearshift control lever into the gearshift lever case located at the rear of the transmission (Figures 9 and 10). The gearshift lever case contains a gearshift arm, a reverse gearshift limit yoke and a gearshift lever. These three components are attached to the gearshift shaft. The gearshift control lever is fitted into the gearshift arm. When the gearshift control lever is moved, the gearshift arm, gearshift shaft and gearshift lever are moved forward, backward, left or right depending upon the gear selected.

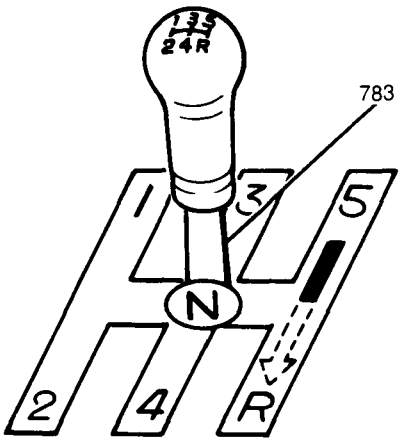

783 GEARSHIFT CONTROL LEVER

NC7407-7B-JT-RS

Figure 9 Gearshift Control Lever Pattern

Moving the gearshift control lever from side to side will engage the gearshift lever with either the low speed gearshift shaft, the high speed gearshift shaft or the reverse gearshift shaft, depending upon the gearshift control lever position.

When the gearshift control lever is moved either forward or backward, the gearshift arm causes the gearshift lever to push or pull the selected gearshift shaft (Figure 10). On the end of each gearshift shaft is a gearshift fork which rides on a synchronizer sleeve. During a gearshift, the gearshift fork moves the synchronizer sleeve forward or backward, engaging or disengaging the gear selection.

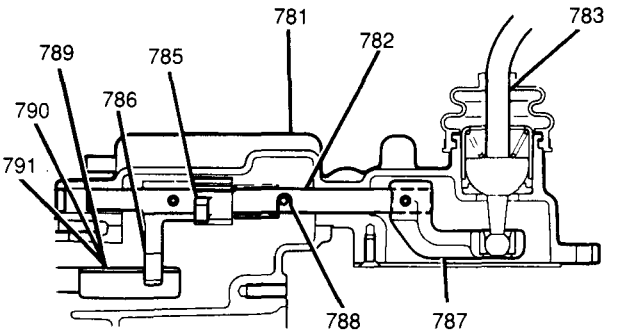

781 GEARSHIFT LEVER CASE
782 GEARSHIFT SHAFT
783 GEARSHIFT CONTROL LEVER
785 REVERSE GEARSHIFT LIMIT YOKE
786 GEARSHIFT LEVER
787 GEARSHIFT ARM
788 GEARSHIFT LIMIT SPRING
789 REVERSE GEARSHIFT SHAFT
790 HIGH SPEED GEARSHIFT SHAFT
791 LOW SPEED GEARSHIFT SHAFT

NC7408-7B-JT-RS

Figure 10 Gearshift Lever Case Components

REVERSE GEARSHIFT LIMIT YOKE

Figures 10 and 11 through 14

The reverse gearshift limit yoke is located in the gearshift lever case and rides on the gearshift shaft. The reverse gearshift limit yoke prevents the transmission from being shifted directly from 5th to reverse. When the transmission is shifted into 5th gear, the reverse gearshift limit yoke is turned clockwise by the gearshift limit spring causing the reverse gearshift limit yoke to land on the reverse gearshift limit bolt. This action prevents a 5th-to-reverse gearshift (Figure 11).

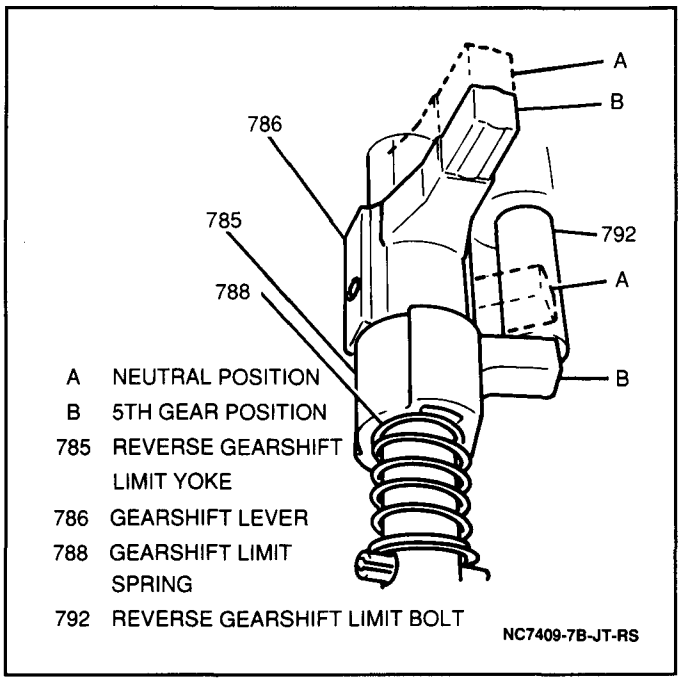

Figure 11 Shifting From "N" (Neutral) Position to 5th Gear Position

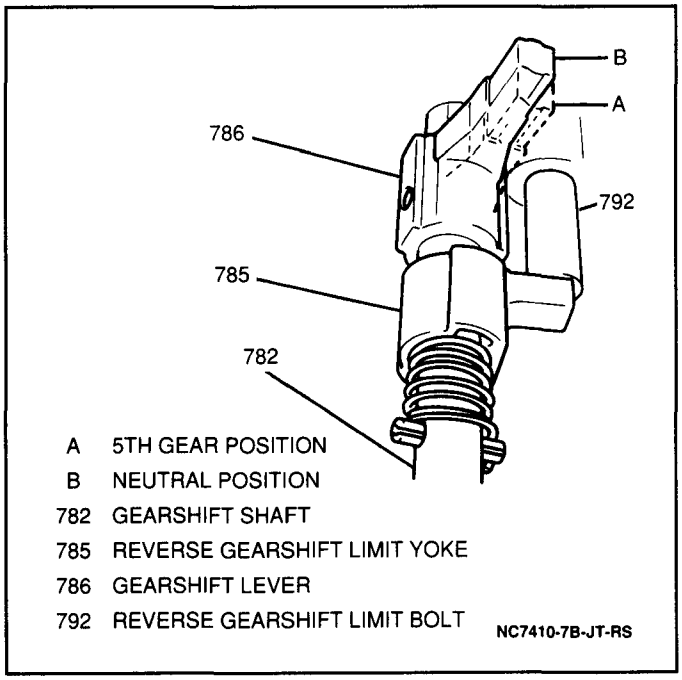

Figure 12 Shifting From 5th Gear Position to "N" (Neutral) Position

Shifting from 5th gear to neutral is possible with the reverse gear shift still canceled. This is due to the reverse gearshift limit yoke making contact with the reverse gearshift limit bolt preventing further gearshift control lever rearward movement (Figure 12).

When the gearshift shaft is turned to the neutral position between 3rd and 4th gears, the gearshift limit spring turns the reverse gearshift limit yoke counter-clockwise away from the reverse gearshift limit bolt. This action cancels the limiting mechanism and allows a reverse gearshift (Figure 13). After the reverse gearshift limiting mechanism has been canceled, reverse gear is then available (Figure 14).

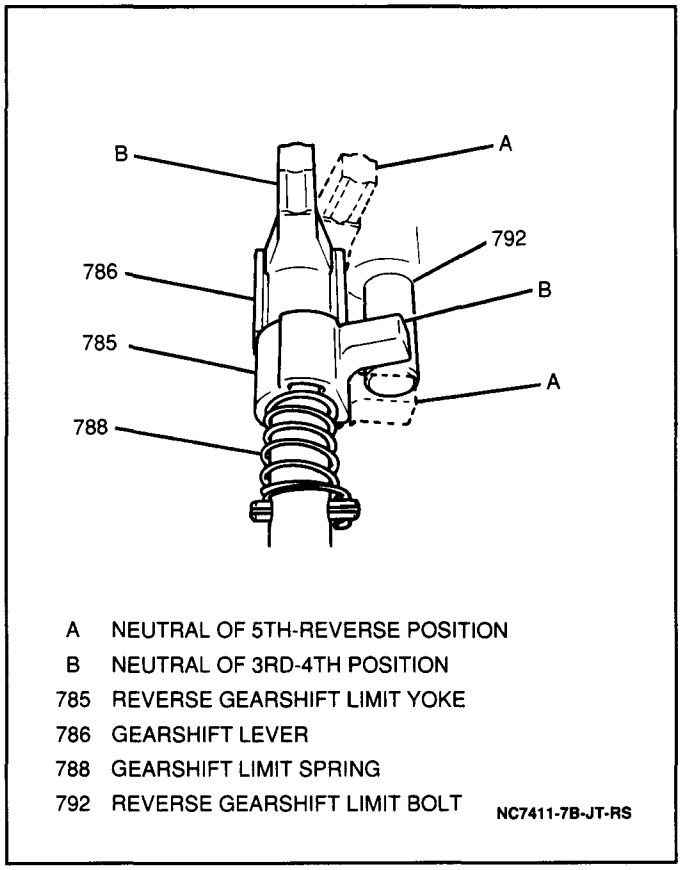

Figure 13 Gearshift Limiting Mechanism Canceled

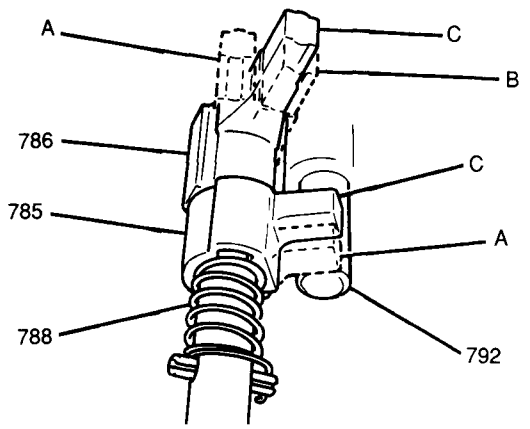

A NEUTRAL OF 3RD-4TH POSITION
B NEUTRAL OF 5TH-REVERSE POSITION
C REVERSE POSITION
785 REVERSE GEARSHIFT LIMIT YOKE
786 GEARSHIFT LEVER
788 GEARSHIFT LIMIT SPRING
792 REVERSE GEARSHIFT LIMIT BOLT

NC7412-7B-JT-RS

Figure 14 Gearshift Limiting Mechanism in Reverse Position

DIAGNOSIS

Before attempting to repair the transmission, clutch or related linkages for any reason other than mechanical failure, the condition and probable causes should be identified. Manual transmission and clutch failures are revealed by shifting difficulties such as excessive shifting effort, gear clash or gear grinding. When any of these conditions occur, the following checks and adjustments should be made before disassembling the transmission and/or clutch for repairs.

CLUTCH SPIN DOWN TIME

1. Run the engine at a normal idle with the transmission in neutral and the clutch engaged.
2. Disengage the clutch (clutch pedal depressed), wait approximately nine seconds, and shift the transmission into reverse.
3. If a grinding noise is heard, check the clutch for engagement.

ISOLATING NOISE

Figures 15 and 16

Many noises believed to be coming from the transmission may be originating from other sources such as tires, road surfaces, wheel bearings, the engine or the exhaust system. These noises may vary according to vehicle size, type, and amount of body insulation used. A thorough and careful check should be made to determine the source of the noise before disassembling the transmission. Transmission gears, like any mechanical device, are not absolutely quiet and will exhibit some normal operating noise. The following is a suggested approach to verify suspected transmission noises.

1. Select a smooth, level asphalt road to reduce tire noise.
2. Drive the vehicle until engine coolant has reached normal operating temperature.
3. Record speed and gear range at which noise, if any, occurs.
4. Check for noises with the engine running and vehicle stopped.
5. Determine in which of the following drive conditions the noise is occurring:
   A. Drive — light acceleration or heavy pull.
   B. Float — maintaining constant vehicle speed at light throttle with transmission in gear.
   C. Coast — partially or fully closed throttle with transmission in gear.
   D. All of the above.
6. After road testing the vehicle, refer to the Transmission Diagnosis Charts for diagnosis of transmission shift difficulties and noise characteristics under various conditions (Figures 15 and 16).

CONDITION	INSPECT COMPONENT	FOR PROBABLE CAUSE
NOISY IN ALL GEARS	TRANSMISSION OIL LEVEL	LOW OIL LEVEL
	MAIN SHAFT BEARINGS	WEAR OR DAMAGE
	COUNTERSHAFT BEARINGS	WEAR OR DAMAGE
NOISY IN NEUTRAL WITH ENGINE RUNNING	INPUT SHAFT BEARING	WEAR OR DAMAGE
	CLUTCH RELEASE BEARING	WEAR OR DAMAGE
NOISY IN 1ST GEAR ONLY	MAIN SHAFT 1ST GEAR OR NEEDLE BEARING	WEAR OR DAMAGE
	LOW SPEED SYNCHRONIZER ASSEMBLY	WEAR OR DAMAGE
NOISY IN 2ND GEAR ONLY	MAIN SHAFT 2ND GEAR OR NEEDLE BEARING	WEAR OR DAMAGE
	LOW SPEED SYNCHRONIZER ASSEMBLY	WEAR OR DAMAGE
NOISY IN 3RD GEAR ONLY	MAIN SHAFT 3RD GEAR OR NEEDLE BEARING	WEAR OR DAMAGE
	HIGH SPEED SYNCHRONIZER ASSEMBLY	WEAR OR DAMAGE
NOISY IN 4TH GEAR ONLY	INPUT SHAFT 4TH GEAR OR NEEDLE BEARING	WEAR OR DAMAGE
	HIGH SPEED SYNCHRONIZER ASSEMBLY	WEAR OR DAMAGE
NOISY IN 5TH GEAR ONLY	MAIN SHAFT 5TH GEAR OR NEEDLE BEARING	WEAR OR DAMAGE
	REVERSE SYNCHRONIZER ASSEMBLY	WEAR OR DAMAGE
NOISY IN REVERSE ONLY	REVERSE IDLER GEAR OR NEEDLE BEARING	WEAR OR DAMAGE
	MAIN SHAFT REVERSE GEAR OR NEEDLE BEARING	WEAR OR DAMAGE
	REVERSE SYNCHRONIZER ASSEMBLY	WEAR OR DAMAGE
TRANSMISSION SLIPS OUT OR GEAR	GEARSHIFT SHAFTS OR FORKS	WEAR OR DISTORTION
	SYNCHRONIZER SLEEVES	WEAR OR MISALIGNMENT
	LOCATING SPRINGS	DISTORTION OR WEAKNESS
	MAIN SHAFT OR COUNTERSHAFT BEARINGS	WEAR OR DAMAGE

NC7413-7B-JT-RS

Figure 15 Transmission Diagnosis Chart 1 of 2

CONDITION	INSPECT COMPONENT	FOR PROBABLE CAUSE
GEARS WILL NOT DISENGAGE	SYNCHRONIZER SPRINGS	WEAK OR BROKEN
	GEARSHIFT SHAFTS OR FORKS	DISTORTION OR DAMAGE
HARD SHIFTING EFFORT	CLUTCH PEDAL FREE TRAVEL	MISADJUSTED
	CLUTCH DISC	WEAR OR DISTORTION
	CLUTCH PRESSURE PLATE	BROKEN DIAPHRAGM SPRING OR WEAR
	SYNCHRONIZER RINGS	WEAR OR DAMAGE

NC7414-7B-JT-RS

Figure 16 Transmission Diagnosis Chart 2 of 2

OIL LEAK DIAGNOSIS

Figure 17

The cause of transmission oil leaks can usually be located with the transmission in the vehicle. The transmission case components are constructed of aluminum and are separated into six pieces: the clutch housing, input shaft bearing retainer, upper case, lower case, extension case (two-wheel drive models), rear case (four-wheel drive models) and the gearshift lever case. If a leak exists between the upper case, lower case or input shaft bearing retainer, the transmission must be removed from the vehicle for repair. Refer to SECTION 7B-10 (two-wheel drive models) and SECTION 7B-11 (four-wheel drive models) for manual transmission unit repair procedures. If a leak exists at the extension case (two-wheel drive models), rear case (four-wheel drive models) or the gearshift lever case, the leak can be repaired without removing the transmission assembly from the vehicle. There are three methods for locating manual transmission oil leaks.

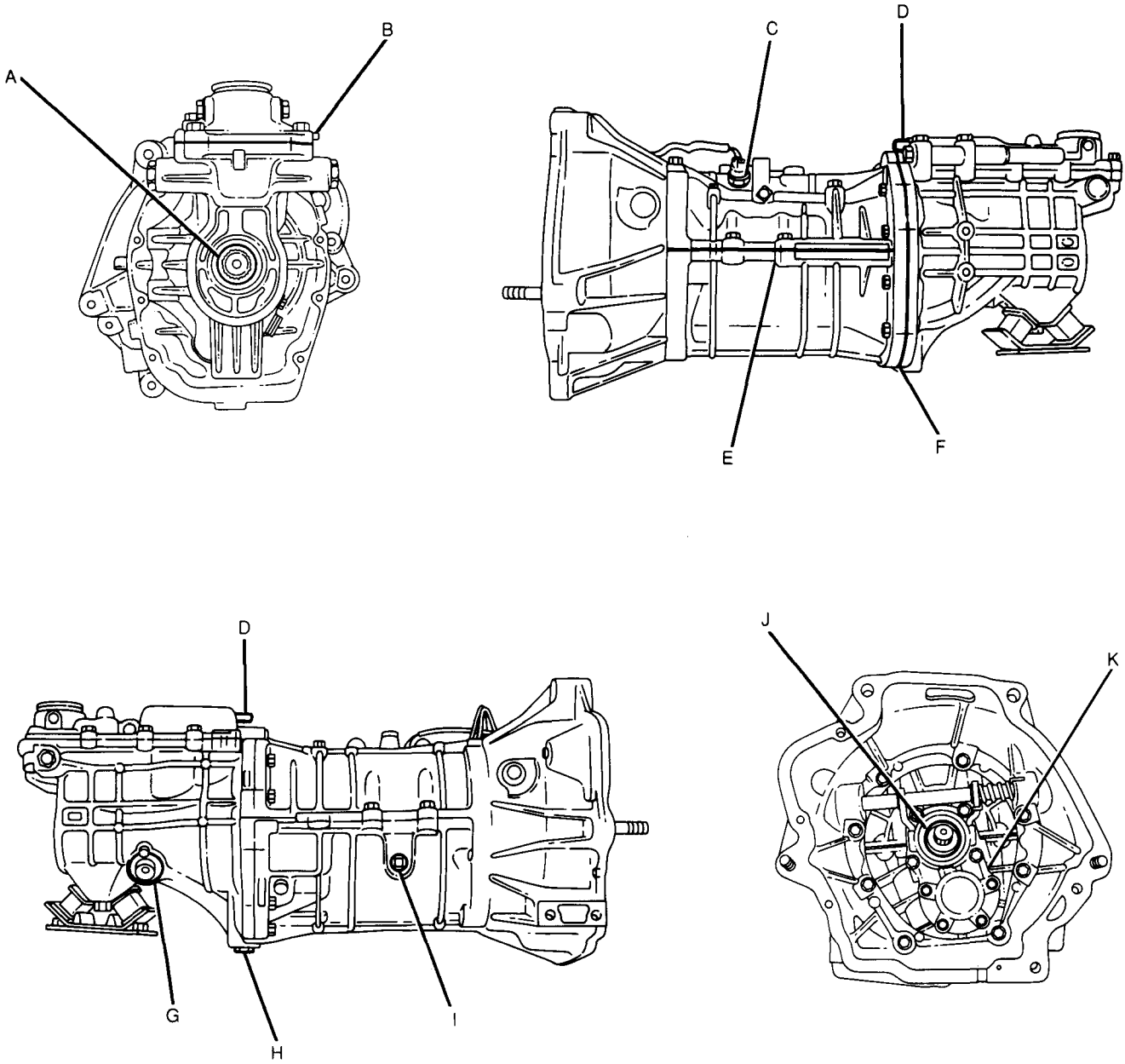

A EXTENSION CASE OIL SEAL (TWO-WHEEL DRIVE MODELS)

B GEARSHIFT LEVER CASE SEAL

C BACKUP LAMP SWITCH O-RING

D VENT

E UPPER-TO-LOWER CASE SEAL

F EXTENSION CASE-TO-UPPER AND LOWER CASE SEAL (TWO-WHEEL DRIVE MODELS)

F REAR CASE-TO-UPPER AND LOWER CASE SEAL (FOUR-WHEEL DRIVE MODELS)

G SPEEDOMETER DRIVEN GEAR CASE O-RING

H TRANSMISSION DRAIN PLUG

I TRANSMISSION OIL LEVEL/FILLER PLUG

J INPUT SHAFT OIL SEAL

K INPUT SHAFT BEARING RETAINER SEAL

PC7415-7B-JT-RS

Figure 17 Possible Points of Oil Leaks

General Method

1. Verify that the leak is transmission oil.
2. Thoroughly clean the suspected leak area.
3. Drive the vehicle for 24 km (15 miles) or until normal operating temperatures are reached.
4. Park the vehicle over clean paper or cardboard.
5. Turn the ignition switch to the "OFF" position and wait approximately 30 minutes.
6. Inspect paper for spots in relation to its position under the transmission assembly.
7. Make the necessary repairs.

Powder Method

1. Thoroughly clean the suspected leak area with solvent.
2. Apply an aerosol powder or baby powder to the suspected leak area.
3. Drive the vehicle for 24 km (15 miles) or until normal operating temperatures are reached.
4. Turn the ignition switch to the "OFF" position.
5. Inspect the suspected leak area and trace the leak path through the powder to find the source.
6. Make the necessary repairs.

Dye and Black Light Method

Tools Required:
J 28428-D High Intensity Black Light
J 28431-6 Fluorescent Oil Additive

1. Raise and suitably support vehicle. Refer to SECTION 0A.
2. Add 30 ml (1 oz.) of J 28431-6 into the transmission oil level/filler plug.
3. Lower vehicle.
4. Drive vehicle for 24 km (15 miles) or until normal operating temperatures are reached.
5. Turn the ignition switch to the "OFF" position.
6. Raise and suitably support vehicle. Refer to SECTION 0A.
7. Using a J 28428-D, locate the source of the leak.
8. Make the necessary repairs.

TRANSMISSION OIL LEAK REPAIR

Once the leak has been pinpointed and traced to its source, the cause of the leak must be determined for it to be properly repaired. For example, if a case component is resealed but the mating surface is damaged, resealing will not repair the leak. The damaged mating surface must be repaired or replaced. Before attempting to repair a leak, certain conditions should be checked for and corrected if necessary. The following conditions may cause a transmission oil leak.

Important

- The Suzuki 5-speed manual transmission does not use gaskets to seal major case components. RTV silicone sealer GM P/N 1052917, or equivalent, should be used where applicable.

- Oil level is too high.
- Plugged breather vent.
- Improperly torqued fasteners, dirty or damaged threads.
- Warped flanges or mating surfaces.
- Scratches, burrs or other damage to mating surfaces.
- Insufficient or excessive amounts of sealer.
- Cracking or porosity of the cases.
- Improper sealant used where applicable.
- Damaged seal bore.
- Damaged or worn seal.
- Scratched, nicked or damaged propeller shaft surfaces.
- Loose or worn bearing causing excessive seal wear.

CASE POROSITY REPAIR

If the cause of the leak is found to be case porosity, use the following repair procedure:

1. Drive the vehicle for 24 km (15 miles) or until normal operating temperatures are reached.
2. Turn the ignition switch to the "OFF" position.
3. Clean the leak area with solvent and air dry.

   CAUTION: Epoxy cement may cause skin irritations and eye damage. Read and follow all information on the container label as provided by the manufacturer.

4. Mix a sufficient amount of epoxy cement GM P/N 1052533, or equivalent, following the manufacturer's recommendations.
5. While the transmission case is hot, apply epoxy cement with a clean, dry soldering acid brush.
6. Allow the epoxy to cure for three hours before starting the engine.
7. Repeat the fluid leak diagnosis procedure to verify the repair.

ON-VEHICLE SERVICE

CHECKING TRANSMISSION OIL LEVEL

Figures 18 and 19

1. Raise and suitably support vehicle. Refer to SECTION 0A.
2. Remove transmission oil level/filler plug from transmission (Figures 18 and 19).

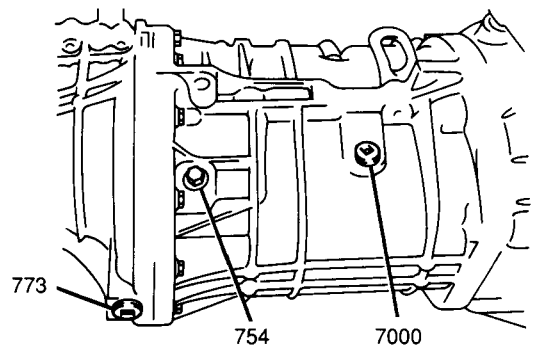

754 REVERSE IDLER SHAFT BOLT (DO NOT LOOSEN)
773 TRANSMISSION DRAIN PLUG
7000 TRANSMISSION OIL LEVEL/FILLER PLUG
NC7416-7B-JT-RS

Figure 18 Transmission Oil Level/Filler and Drain Plug Location (Two-Wheel Drive Models)

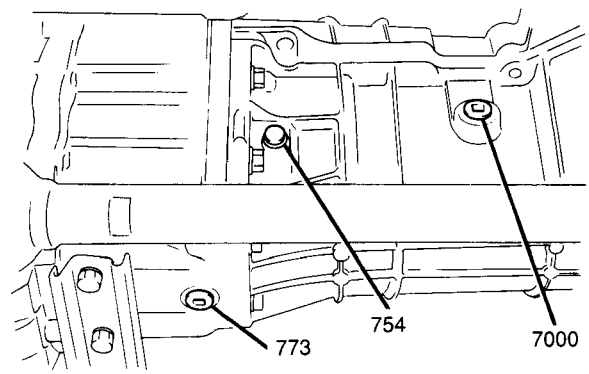

754 REVERSE IDLER SHAFT BOLT (DO NOT LOOSEN)
773 TRANSMISSION DRAIN PLUG
7000 TRANSMISSION OIL LEVEL/FILLER PLUG
NC7417-7B-JT-RS

Figure 19 Transmission Oil Level/Filler and Drain Plug Location (Four-Wheel Drive Models)

Inspect

- Transmission oil level. Oil level should be even with the bottom of the transmission oil level/filler plug hole. If oil level is low, adjust oil level accordingly with synthetic 75W-90 GL4 lubricant GM P/N 12345871, or equivalent.

3. Apply Loctite® pipe sealant GM P/N 1052080, or equivalent, to the threaded portion of the transmission oil level/filler plug.
4. Install transmission oil level/filler plug into transmission (Figures 18 and 19).

Tighten

- Transmission oil level/filler plug to 28 N·m (20 lb.ft.).

5. Lower vehicle.

TRANSMISSION OIL CHANGE PROCEDURE

Figures 18 and 19

1. Raise and suitably support vehicle. Refer to SECTION 0A.
2. Place a drain pan or suitable container underneath transmission.
3. Remove transmission oil level/filler plug from transmission (Figures 18 and 19).
4. Remove transmission drain plug from transmission and drain transmission oil (Figures 18 and 19).
5. Apply Loctite® pipe sealant GM P/N 1052080, or equivalent, to the threaded portion of the transmission drain plug.
6. Install transmission drain plug into transmission.

Tighten

- Transmission drain plug to 28 N·m (20 lb.ft.).

7. Add approximately 1.5 liters (1.6 qts.) of synthetic 75W-90 GL4 lubricant GM P/N 12345871, or equivalent, into the transmission oil level/filler plug hole. Oil level should be even with the bottom of the transmission oil level/filler plug hole.
8. Apply Loctite® pipe sealant GM P/N 1052080, or equivalent, to the threaded portion of the transmission oil level/filler plug.
9. Install transmission oil level/filler plug into transmission (Figures 18 and 19).

Tighten

- Transmission oil level/filler plug to 28 N·m (20 lb.ft.).

10. Remove drain pan from underneath transmission.
11. Lower vehicle.

REAR TRANSMISSION MOUNT (TWO-WHEEL DRIVE MODELS)

Figures 20 and 21

Remove or Disconnect

- Raise and suitably support vehicle. Refer to SECTION 0A.
- Support transmission with a suitable hydraulic jack.

1. One bolt and ground wire from speedometer driven gear case.

- Temporarily install the speedometer driven gear case retaining bolt.

2. Two bolts from rear transmission mount (Figure 20).

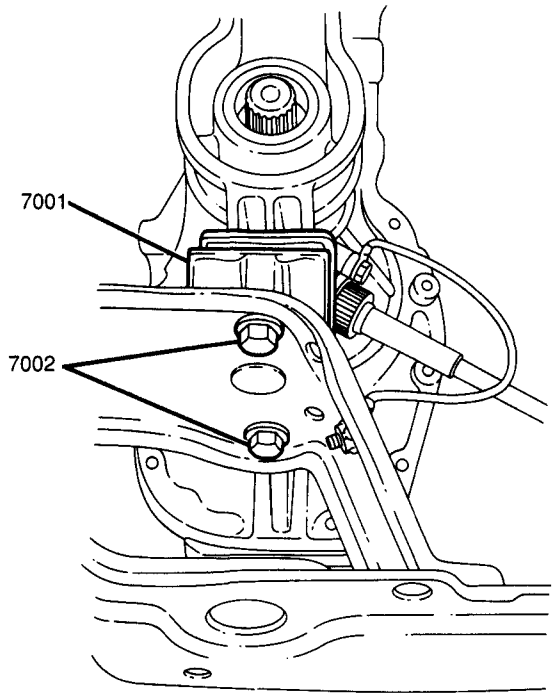

7001 REAR TRANSMISSION MOUNT
7002 REAR TRANSMISSION MOUNT BOLTS
NC7418-7B-JT-RS

Figure 20 Rear Transmission Mount Bolts (Two-Wheel Drive Models)

3. Four bolts and rear transmission crossmember from vehicle.
4. One bolt and rear transmission mount from extension case (Figure 21).

Install or Connect

1. Rear transmission mount to extension case; secure with one bolt (Figure 21).

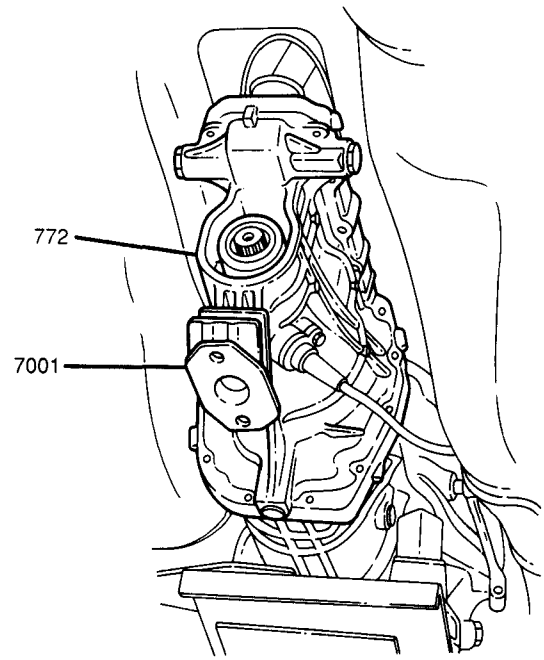

772 EXTENSION CASE
7001 REAR TRANSMISSION MOUNT
NC7419-7B-JT-RS

Figure 21 Rear Transmission Mount (Two-Wheel Drive Models)

Tighten

- Rear transmission mount bolt to 60 N·m (44 lb.ft.).

2. Rear transmission crossmember to vehicle; secure with four bolts.

Tighten

- Rear transmission crossmember bolts to 60 N·m (44 lb.ft.).

3. Two bolts to rear transmission mount (Figure 20).

Tighten

- Rear transmission mount bolts to 60 N·m (44 lb.ft.).

- Remove the speedometer driven gear case retaining bolt.

4. Ground wire to speedometer driven gear case; secure with one bolt.

Tighten

- Speedometer driven gear case retaining bolt to 12 N·m (106 lb.in.).

- Remove hydraulic jack from underneath transmission.
- Lower vehicle.

GEARSHIFT CONTROL LEVER

Figures 22 through 25

Remove or Disconnect

1. Two screws, two plastic retainers and console box from floor (Figure 22).

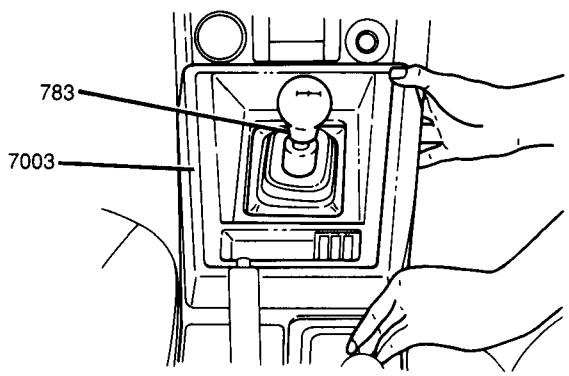

783 GEARSHIFT CONTROL LEVER
7003 CONSOLE BOX

NC7420-7B-JT-RS

Figure 22 Removing Console Box

2. Gearshift control lever knob from gearshift control lever by unscrewing counterclockwise.
3. Gearshift control lever upper boot from gearshift control lever (Figure 23).

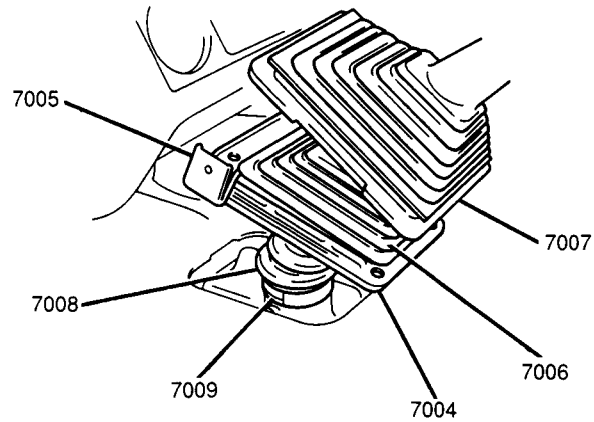

7004 BOOT PLATE
7005 CONSOLE BOX BRACKET
7006 GEARSHIFT CONTROL LEVER LOWER BOOT
7007 GEARSHIFT CONTROL LEVER UPPER BOOT
7008 GEARSHIFT LEVER CASE BOOT
7009 GEARSHIFT LEVER CASE BOOT CLAMP

NC7421-7B-JT-RS

Figure 23 Removing Gearshift Control Lever Upper Boot, Boot Plate, Bracket and Gearshift Control Lever Lower Boot

4. Four bolts, boot plate, console box bracket and gearshift control lever lower boot from gearshift control lever (Figure 23).
5. Clamp and gearshift lever case boot from gearshift lever case (Figure 23).
6. Gearshift control lever from gearshift lever case by pushing down on the gearshift control lever pivot and turning counterclockwise 90 degrees (1/4 turn) and lifting up (Figure 24).

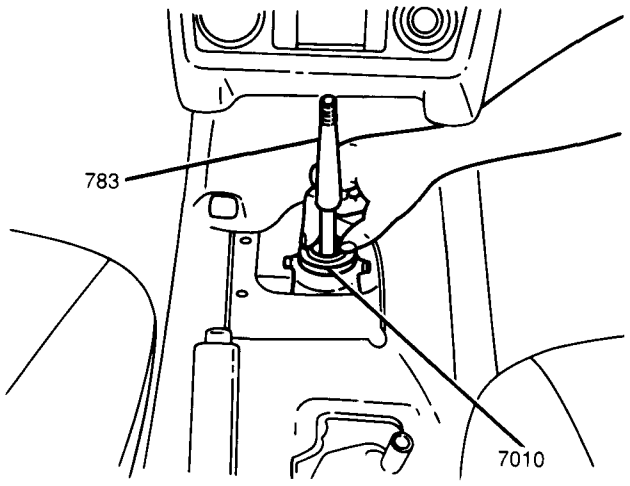

783 GEARSHIFT CONTROL LEVER
7010 GEARSHIFT CONTROL LEVER PIVOT

NC7422-7B-JT-RS

Figure 24 Removing Gearshift Control Lever

Inspect

1. Gearshift control lever for distortion or damage. Replace as necessary.
2. Gearshift control lever spring for distortion or damage. Replace as necessary.
3. Gearshift lever case boot for tears or damage. Replace as necessary.

Install or Connect

1. Gearshift control lever into gearshift lever case and pushing down on the shift control lever pivot and turning clockwise 90 degrees (1/4 turn) and releasing (Figure 25).

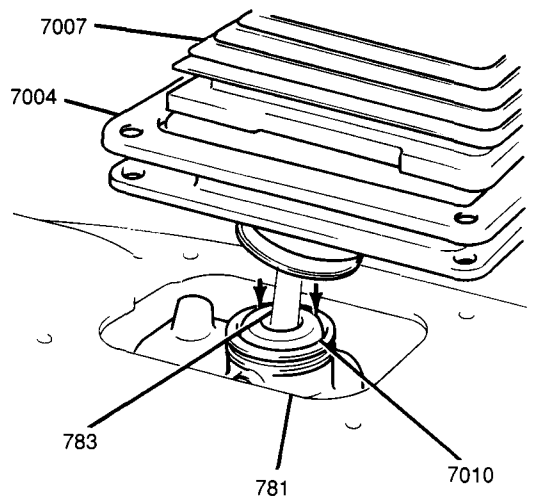

781 GEARSHIFT LEVER CASE
783 GEARSHIFT CONTROL LEVER
7004 BOOT PLATE
7007 GEARSHIFT CONTROL LEVER UPPER BOOT
7010 GEARSHIFT CONTROL LEVER PIVOT

NC7423-7B-JT-RS

Figure 25 Installing Gearshift Control Lever

2. Gearshift lever case boot to gearshift lever case; secure with clamp.
3. Gearshift control lever lower boot, boot plate and console box bracket onto gearshift control lever; secure with four bolts (Figure 22).

Tighten

- Gearshift control lever lower boot plate bolts to 7 N·m (62 lb.in.).

4. Gearshift control lever upper boot onto gearshift control lever.
5. Gearshift control knob onto gearshift control lever by screwing clockwise.
6. Console box to floor; secure with two plastic retainers and two screws.

EXTENSION CASE OIL SEAL (TWO-WHEEL DRIVE MODELS)

Figures 26 and 27

Remove or Disconnect

Tools Required:
J 6125-B Slide Hammer
J 23129 Converter Housing Seal and Extension Housing Oil Seal Remover

- Raise and suitably support vehicle. Refer to SECTION 0A.
- Place index marks on the propeller shaft pinion flange yoke and differential pinion flange to ensure correct installation.

1. Four bolts, four nuts and rear propeller shaft from vehicle.
2. Extension case oil seal from extension case using a J 23129 with a J 6125-B (Figure 26).

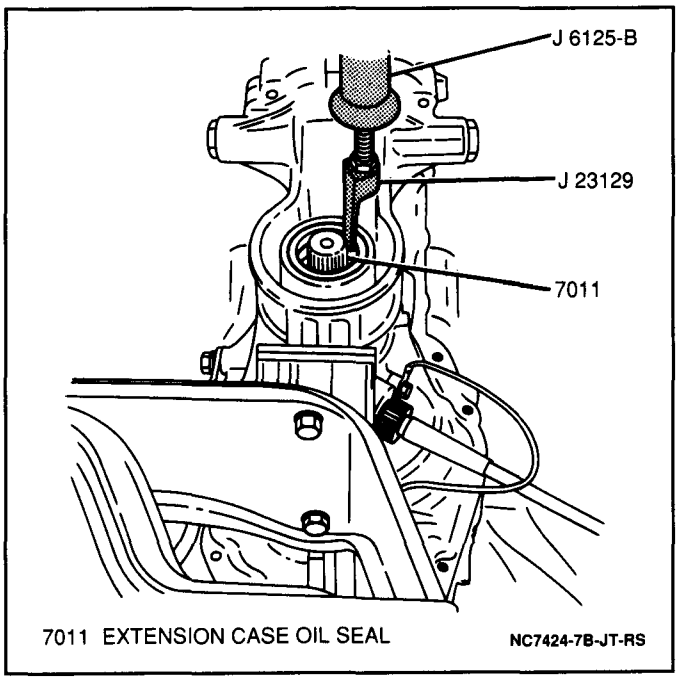

Figure 26 Removing Extension Case Oil Seal (Two-Wheel Drive Models)

Inspect

- Seal surface of extension case for cracks or porosity. If cracks or porosity exist, replace extension case.

Install or Connect

Tools Required:
J 37750 Oil Seal Installer
J 36850 Transjel® Transmission Assembly Lubricant

1. New extension case oil seal into extension case using a J 37750 and a hammer (Figure 27).

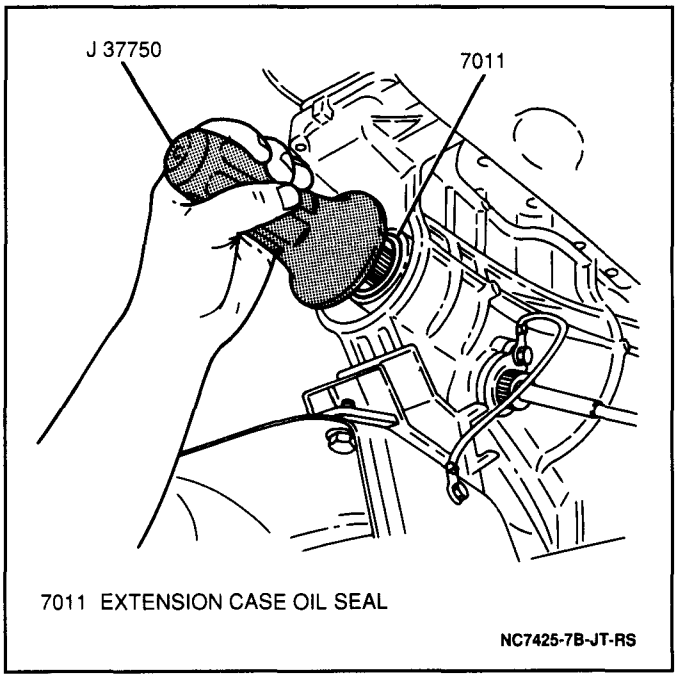

Figure 27 Installing Extension Case Oil Seal (Two-Wheel Drive Models)

- Apply J 36850 to the new extension case oil seal lip.

2. Rear propeller shaft into vehicle aligning index marks made during removal; secure with four bolts and four nuts.

Tighten

- Rear propeller shaft bolts and nuts to 50 N·m (37 lb.ft.).

- Lower vehicle.

BACKUP LAMP SWITCH

Figures 28 and 29

Remove or Disconnect

1. Negative (-) battery cable.

- Raise and suitably support vehicle. Refer to SECTION 0A.

2. Backup lamp switch electrical connector from backup lamp switch (Figure 28).

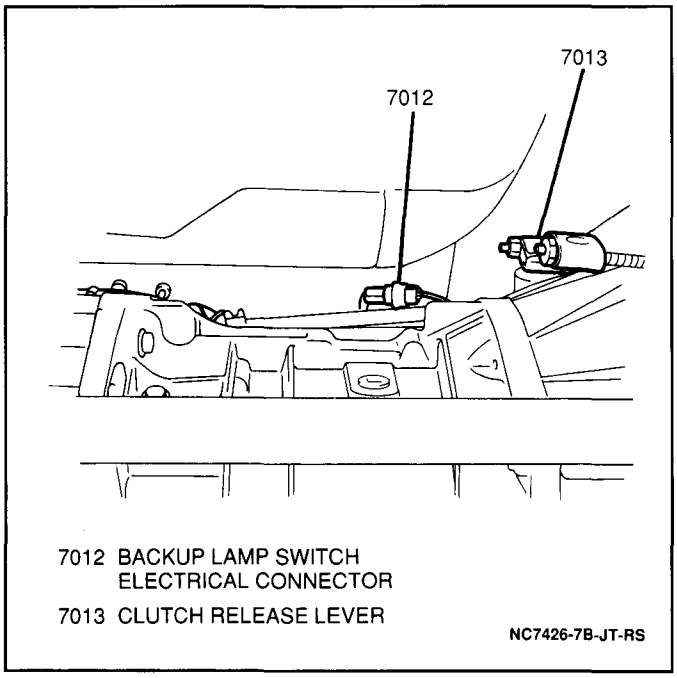

Figure 28 Backup Lamp Switch Electrical Connector

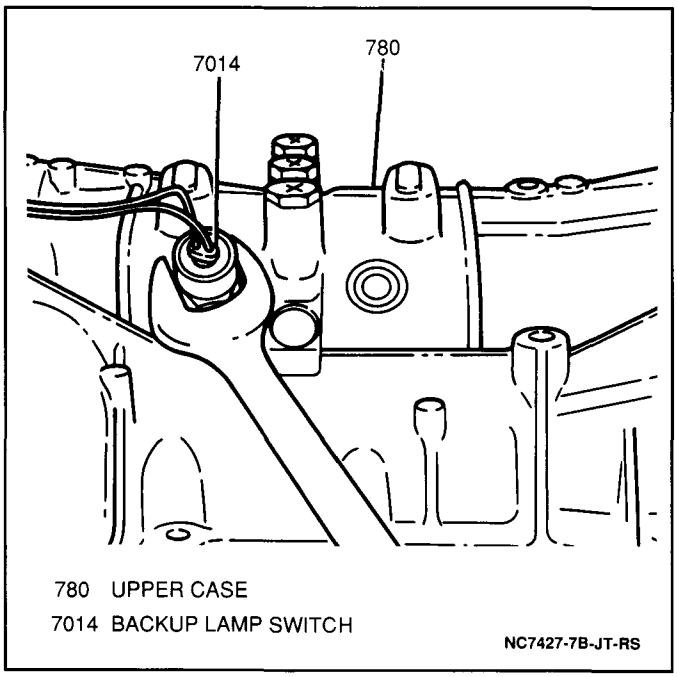

Figure 29 Removing Backup Lamp Switch

3. Backup lamp switch from upper case (Figure 29).

Inspect

1. For backup lamp switch diagnosis, refer to SECTION 8A.
2. Backup lamp switch O-ring for cuts or damage. Replace as necessary.

Install or Connect

1. Backup lamp switch into upper case (Figure 29).

Tighten

- Backup lamp switch to 23 N·m (17 lb.ft.).

2. Backup lamp switch electrical connector to backup lamp switch (Figure 28).
- Lower vehicle.
3. Negative (-) battery cable.

Tighten

- Negative (-) battery cable-to-negative (-) battery terminal retainer to 15 N·m (11 lb.ft.).

SPEEDOMETER DRIVEN GEAR (TWO-WHEEL DRIVE MODELS)

Figures 30 through 33

Remove or Disconnect

- Raise and suitably support vehicle. Refer to SECTION 0A.
1. Speedometer cable from speedometer driven gear case (Figure 30).

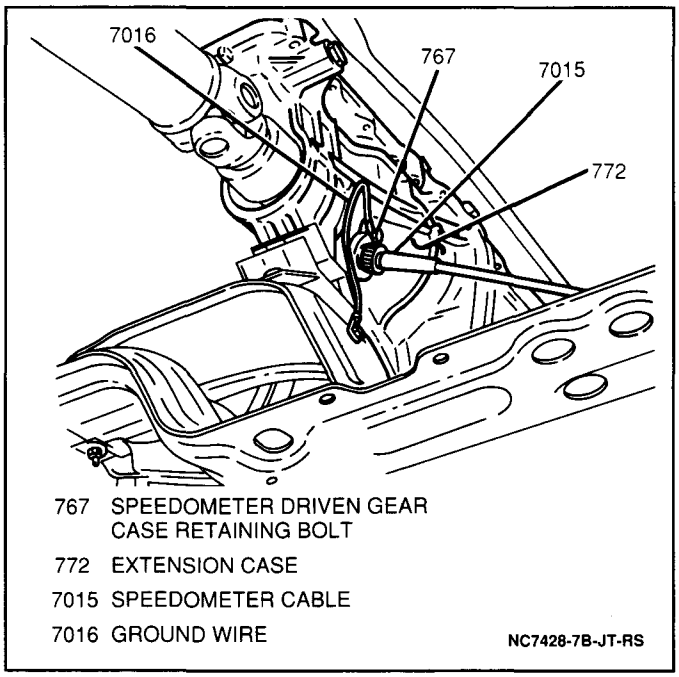

Figure 30 Speedometer Cable and Driven Gear Case Retaining Bolt (Two-Wheel Drive Models)

2. One bolt, ground wire and speedometer driven gear case from extension case (Figure 30).
3. One roll pin and speedometer driven gear from speedometer driven gear case (Figure 31).

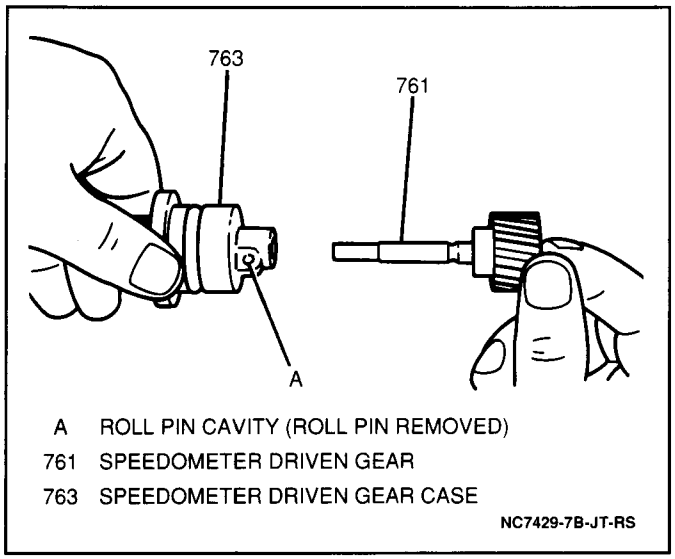

Figure 31 Removing Speedometer Driven Gear (Two-Wheel Drive Models)

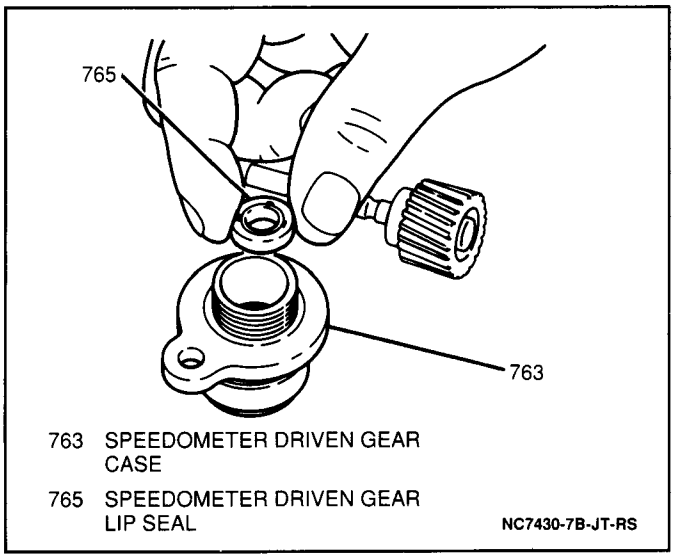

Figure 32 Removing Speedometer Driven Gear Case Lip Seal (Two-Wheel Drive Models)

4. Speedometer driven gear lip seal from speedometer driven gear case (Figure 32).

Inspect

- Speedometer driven gear for excessive wear or damage. Replace as necessary.

Install or Connect

Tools Required:
J 34833 Valve Guide Remover
J 36850 Transjel® Transmission Assembly Lubricant

- Apply J 36850 to the new speedometer driven gear lip seal.

1. New speedometer driven gear lip seal into speedometer driven gear case using a J 34833 (Figure 33).

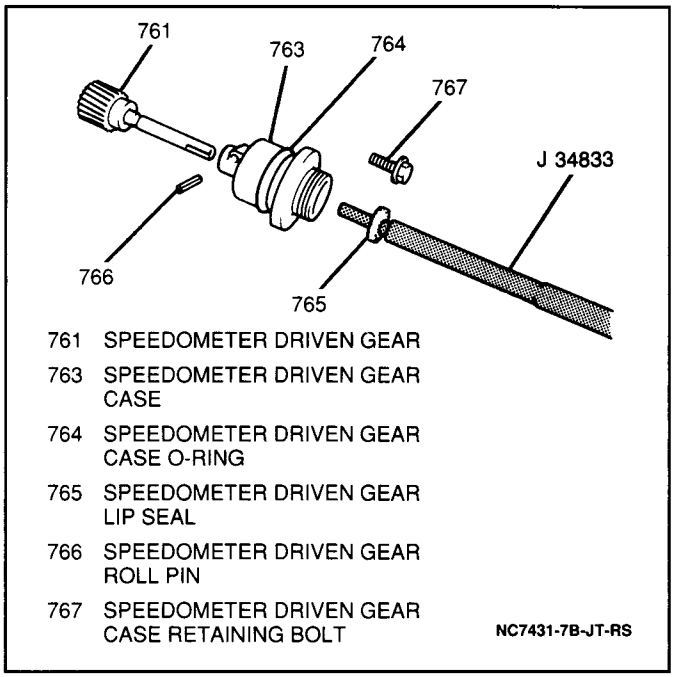

Figure 33 Installing Speedometer Driven Gear Lip Seal (Two-Wheel Drive Models)

2. Speedometer driven gear into speedometer driven gear case; secure with one roll pin (Figure 33).
3. Speedometer driven gear case and ground wire to extension case; secure with one bolt (Figure 30).

Tighten

- Speedometer driven gear case retaining bolt to 12 N·m (106 lb.in.).

4. Speedometer cable to speedometer driven gear case.

- Lower vehicle.

Speedometer Cable

For speedometer cable service procedures, refer to SECTION 8C.

EXTENSION CASE (TWO-WHEEL DRIVE MODELS)

Figures 18, 20, 30, 34, 35 and 36

Remove or Disconnect

1. Gearshift control lever from gearshift lever case. Refer to "Gearshift Control Lever" earlier in this section.
2. Four bolts from fan shroud at radiator.

- Raise and suitably support vehicle. Refer to SECTION 0A.
- Place a drain pan or suitable container underneath transmission.

3. Transmission oil level/filler plug from transmission (Figure 18).
4. Transmission drain plug from transmission and drain transmission oil (Figure 18).
- Place index marks on the propeller shaft pinion flange yoke and differential pinion flange to ensure correct installation.
5. Four bolts, four nuts and rear propeller shaft from vehicle.
6. Speedometer cable from speedometer driven gear case.
7. One bolt, ground wire and speedometer driven gear case from extension case (Figure 30).
8. Two bolts, two nuts and three way catalytic converter (TWC) support bracket from extension housing and TWC.
9. Two bolts and separate front pipe/TWC assembly from muffler/tail pipe assembly.
10. Three nuts from exhaust manifold and front pipe/TWC assembly from vehicle.
- Remove drain pan from underneath transmission.
- Support transmission with a suitable hydraulic jack.
11. Two bolts from rear transmission mount (Figure 20).
12. Four bolts and rear transmission crossmember from vehicle.
13. One bolt and rear transmission mount from extension case.
- Place a wood block with the dimensions shown in Figure 34 between the distributor gear housing and and the bulkhead to prevent the distributor and other components from being damaged when the transmission is lowered.
- Lower transmission slowly until the engine contacts its support point on the wood block.
14. One clamp and breather hose from gearshift lever case.
15. Ten bolts and gearshift lever case from extension case (Figure 35).

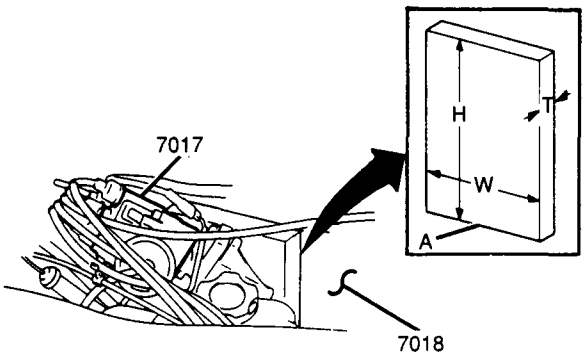

A WOOD BLOCK
H 200 mm (8.0")
T 45 mm (1.8")
W 100–150 mm (4.0–6.0")
7017 DISTRIBUTOR CAP
7018 BULKHEAD
NC7432-7B-JT-RS

Figure 34 Wood Block Support Installation

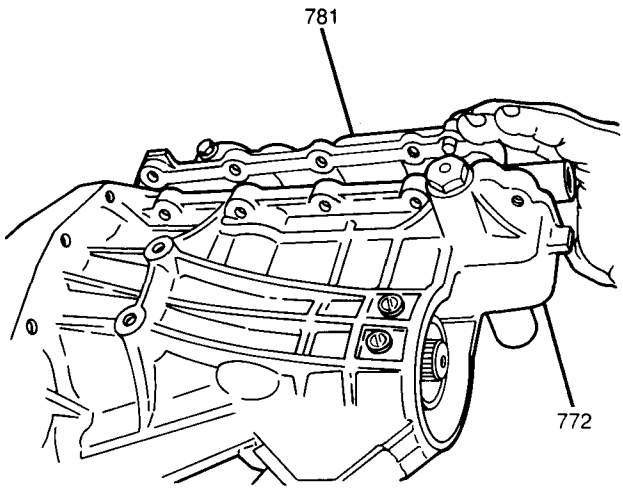

772 EXTENSION CASE
781 GEARSHIFT LEVER CASE
NC7433-7B-JT-RS

Figure 35 Removing Gearshift Lever Case From Extension Case (Two-Wheel Drive Models)

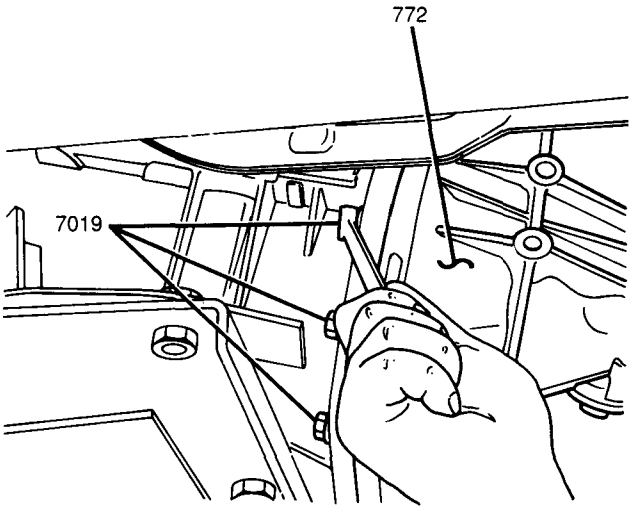

772 EXTENSION CASE
7019 EXTENSION CASE BOLTS
NC7434-7B-JT-RS

Figure 36 Removing Extension Case Bolts (Two-Wheel Drive Models)

16. Twelve bolts and extension case from transmission (Figure 36).
17. Two select return spring bolts, two select return springs and two select guide pins from extension case (Figure 37).

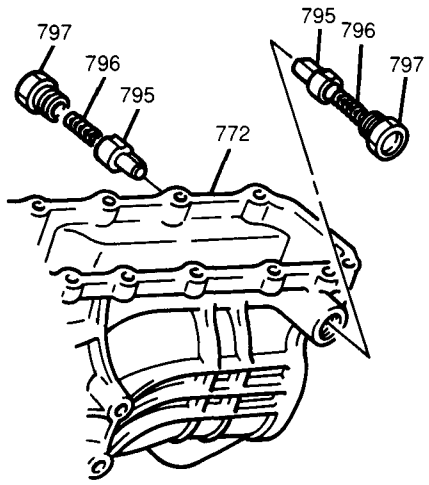

772 EXTENSION CASE
795 SELECT GUIDE PIN
796 SELECT RETURN SPRING
797 SELECT RETURN SPRING BOLT
NC7456-7B-JT-RS

Figure 37 Select Return Components (Two-Wheel Drive Models)

Clean

1. Extension case-to-transmission mating surfaces.
2. Gearshift lever case-to-extension case mating surfaces.

Inspect

- Extension case for cracks or porosity. If cracks or porosity exist, replace extension case.

Install or Connect

1. Two select guide pins, two select return springs and two select return spring bolts into extension case (Figure 37).

Tighten

- Select return spring bolts to 20 N·m (15 lb.ft.).

- Apply RTV silicone sealer GM P/N 1052917, or equivalent, to the transmission extension case mating surface.

2. Extension case to transmission; secure with twelve bolts.

Tighten

- Extension case bolts to 28 N·m (20 lb.ft.).

- Apply RTV silicone sealer GM P/N 1052917, or equivalent, to the extension case gearshift lever case mating surface.

3. Gearshift lever case to extension case; secure with ten bolts.

Tighten

- Gearshift lever case bolts to 17 N·m (12 lb.ft.).

4. Breather hose to gearshift lever case; secure with one clamp.

- Raise transmission slowly until engine is no longer in contact with the wood block between the bulkhead and the distributor gear housing (Figure 34).
- Remove wood block.

5. Rear transmission mount to extension case; secure with one bolt.

Tighten

- Rear transmission mount bolt to 60 N·m (44 lb.ft.).

6. Rear transmission crossmember into vehicle; secure with four bolts.

Tighten

- Rear transmission crossmember bolts to 60 N·m (44 lb.ft.).

7. Two bolts to rear transmission mount (Figure 20).

Tighten

- Rear transmission mount bolts to 60 N·m (44 lb.ft.).

- Remove hydraulic jack from underneath transmission.

8. Front pipe/TWC assembly to vehicle; secure with three nuts at exhaust manifold.

Tighten

- Front pipe/TWC assembly-to-exhaust manifold nuts to 50 N·m (37 lb.ft.).

9. Front pipe/TWC assembly to muffler/tail pipe assembly; secure with two bolts.

Tighten

- Muffler/tail pipe assembly-to-front pipe/TWC assembly bolts to 50 N·m (37 lb.ft.).

10. TWC support bracket to extension case and TWC; secure with two bolts and two nuts.

Tighten

- Three way support bracket bolts and nuts to 60 N·m (44 lb.ft.).

11. Speedometer driven gear case and ground wire to extension case; secure with one bolt (Figure 30).

Tighten

- Speedometer driven gear case retaining bolt to 12 N·m (106 lb.in.).

12. Speedometer cable to speedometer driven gear case (Figure 30).
13. Rear propeller shaft into vehicle aligning index marks made during removal; secure with four bolts and four nuts.

Tighten

- Rear propeller shaft bolts and nuts to 50 N·m (37 lb.ft.).

- Apply Loctite® pipe sealant GM P/N 1052080, or equivalent, to the threaded portion of the transmission drain plug.

14. Transmission drain plug into transmission (Figure 18).

Tighten

- Transmission drain plug to 28 N·m (20 lb.ft.).

- Add approximately 1.5 liters (1.6 qts.) of synthetic 75W-90 GL4 lubricant GM P/N 12345871, or equivalent, into the transmission oil level/filler plug hole. Oil level should be even with the bottom of the transmission oil level/filler plug hole.
- Apply Loctite® pipe sealant GM P/N 1052080, or equivalent, to the threaded portion of the transmission oil level/filler plug.

15. Transmission oil level/filler plug into transmission (Figure 18).

Tighten

- Transmission oil level/filler plug to 28 N·m (20 lb.ft.).

- Lower vehicle.

16. Four bolts to fan shroud at radiator.

Tighten

- Fan shroud bolts to 10 N·m (89 lb.in.).

17. Gearshift control lever into gearshift lever case. Refer to "Gearshift Control Lever" earlier in this section.

SPEEDOMETER DRIVE GEAR (TWO-WHEEL DRIVE MODELS)

Figure 38

Remove or Disconnect

1. Gearshift control lever from gearshift lever case. Refer to "Gearshift Control Lever" earlier in this section.
2. Extension case from transmission. Refer to "Extension Case" earlier in this section.
3. Speedometer drive gear retaining ring and speedometer drive gear from main shaft (Figure 38).

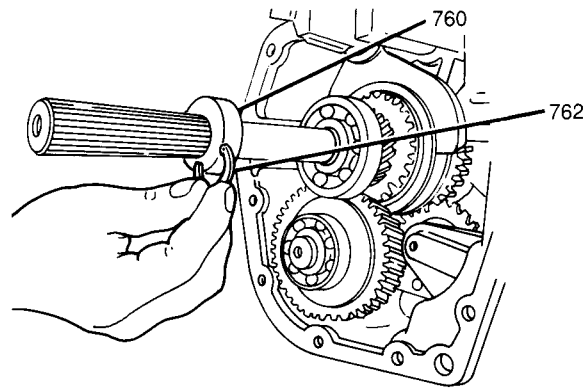

760 SPEEDOMETER DRIVE GEAR
762 SPEEDOMETER DRIVE GEAR RETAINING RING
NC7435-7B-JT-RS

Figure 38 Removing Speedometer Drive Gear Retaining Ring (Two-Wheel Drive Models)

Inspect

- Speedometer drive gear for excessive wear or damage. Replace as necessary.

Install or Connect

1. Speedometer drive gear onto main shaft; secure with speedometer drive gear retaining ring (Figure 38).
2. Extension case to transmission. Refer to "Extension Case" earlier in this section.
3. Gearshift control lever into gearshift lever case. Refer to "Gearshift Control Lever" earlier in this section.

GEARSHIFT LEVER CASE REMOVAL (TWO-WHEEL DRIVE MODELS)

Figures 18, 20, 30, 34 and 35

Remove or Disconnect

1. Gearshift control lever from gearshift lever case. Refer to "Gearshift Control Lever" earlier in this section.
2. Four bolts from fan shroud at radiator.

- Raise and suitably support vehicle. Refer to SECTION 0A.
- Place a drain pan or suitable container underneath transmission.

3. Transmission oil level/filler plug from transmission (Figure 18).

4. Transmission drain plug from transmission and drain transmission oil (Figure 18).
- Place index marks on the propeller shaft pinion flange yoke and differential pinion flange to ensure correct installation.
5. Four bolts, four nuts and rear propeller shaft from vehicle.
6. Speedometer cable from speedometer driven gear case (Figure 30).
7. One bolt and ground wire from speedometer driven gear case (Figure 30).
- Temporarily install speedometer driven gear case retaining bolt.
8. Two bolts, two nuts and three way catalytic converter (TWC) support bracket from extension housing and TWC.
9. Two bolts and separate front pipe/TWC assembly from muffler/tail pipe assembly.
10. Three nuts from exhaust manifold and front pipe/TWC assembly from vehicle.
- Remove drain pan from underneath transmission.
- Support transmission with a suitable hydraulic jack.
11. Two bolts from rear transmission mount (Figure 20).
12. Four bolts and rear transmission crossmember from vehicle.
- Place a wood block with the dimensions shown in Figure 34 between the distributor gear housing and the bulkhead to prevent the distributor and other components from being damaged when the transmission is lowered.
- Lower transmission slowly until the engine contacts its support point on the wood block.
13. One clamp and breather hose from gearshift lever case.
14. Ten bolts and gearshift lever case from extension case (Figure 35).

Gearshift Lever Case Disassembly (Two-Wheel Drive Models)

Figure 38

Remove or Disconnect

1. One inner and outer roll pin and gearshift arm from gearshift shaft (Figure 39).
2. Gearshift control lever bushing from gearshift arm (Figure 39).

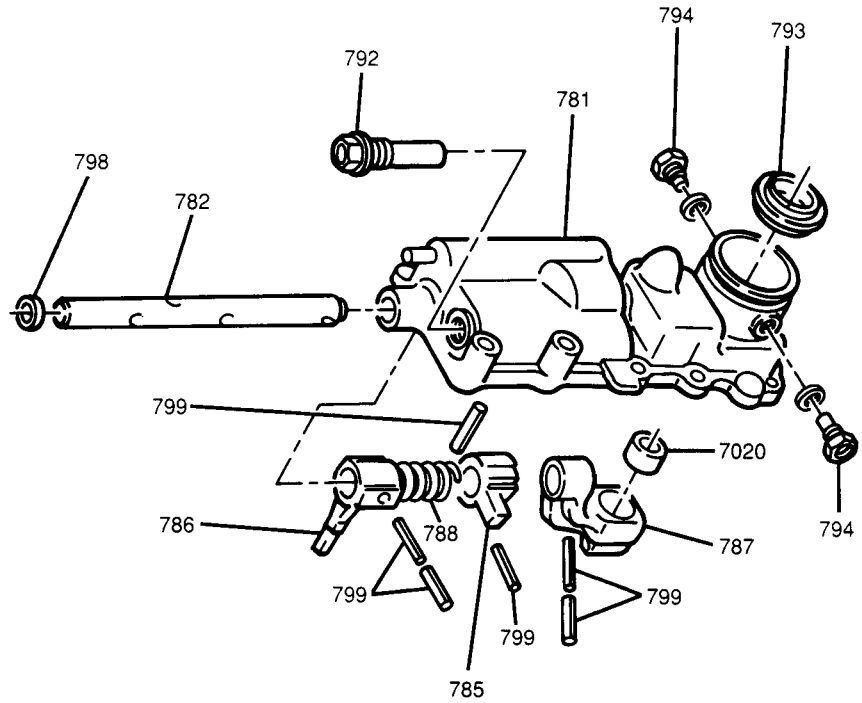

781 GEARSHIFT LEVER CASE
782 GEARSHIFT SHAFT
785 REVERSE GEARSHIFT LIMIT YOKE
786 GEARSHIFT LEVER
787 GEARSHIFT ARM
788 GEARSHIFT LIMIT SPRING
792 REVERSE GEARSHIFT LIMIT BOLT
793 GEARSHIFT LEVER CASE SEAT
794 LEVER LOCATING BOLT
798 GEARSHIFT LEVER CASE PLUG
799 ROLL PIN
7020 GEARSHIFT CONTROL LEVER BUSHING

Figure 39 Gearshift Lever Case Components (Two-Wheel Drive Models)

3. One roll pin from gearshift shaft releasing tension on gearshift limit spring.
4. One inner and outer roll pin from gearshift lever (Figure 39).
5. One roll pin from reverse gearshift limit yoke (Figure 39).
- Unstake gearshift lever case plug.
6. Gearshift lever case plug from gearshift lever case (Figure 39).
7. Gearshift shaft from gearshift lever case while simultaneously removing the gearshift lever, reverse gearshift limit yoke and gearshift limit spring from gearshift shaft (Figure 39).
8. Reverse gearshift limit bolt from gearshift lever case (Figure 39).
9. Two select return spring bolts, two select return springs and two select guide pins from extension case (Figure 37).
10. Two lever locating bolts and washers from gearshift lever case (Figure 38).
11. Gearshift lever case seat from gearshift lever case.

Clean

- All components thoroughly with solvent and air dry.

Inspect

1. Gearshift shaft by inserting into gearshift lever case and working back and forth while feeling for any binding. If gearshift shaft does not move freely in and out of the gearshift lever case, replace the gearshift lever case and gearshift shaft.
2. Gearshift lever, reverse gearshift limit yoke and gearshift arm for smooth fit and movement on gearshift shaft. If any of the above components bind on the gearshift shaft, replace the gearshift shaft, gearshift lever, reverse gearshift limit yoke and gearshift arm.
3. Gearshift limit spring for weakness or distortion. Replace as necessary.
4. Gearshift control lever bushing for excessive wear. Replace as necessary.
5. Gearshift lever case seat for excessive wear. Replace as necessary.

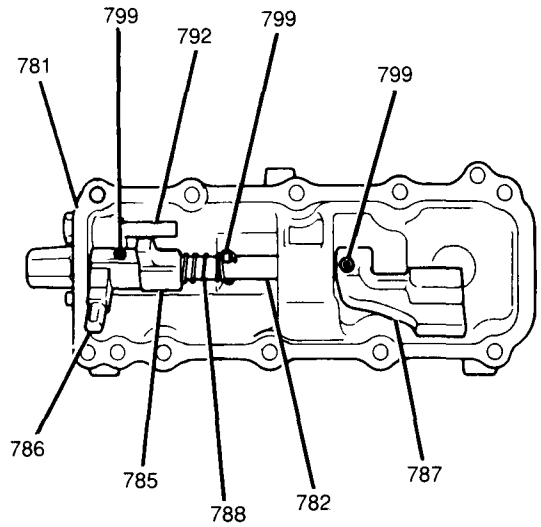

781 GEARSHIFT LEVER CASE
782 GEARSHIFT SHAFT
785 REVERSE GEARSHIFT LIMIT YOKE
786 GEARSHIFT LEVER
787 GEARSHIFT ARM
788 GEARSHIFT LIMIT SPRING
792 REVERSE GEARSHIFT LIMIT BOLT
799 ROLL PIN

NC7437-7B-JT-RS

Figure 40 Gearshift Lever Case Assembly (Two-Wheel Drive Models)

Gearshift Lever Case Assembly (Two-Wheel Drive Models)

Figures 39, 40 and 41

Install or Connect

Tool Required:
J 36850 Transjel® Transmission Assembly Lubricant

- Apply a thin coat of J 36850 to all components prior to assembly.

1. Gearshift lever case seat into gearshift lever case (Figure 38).
2. Two lever locating bolts and washers into gearshift lever case (Figure 39).

Tighten

- Lever locating bolts to 20 N·m (15 lb.ft.).

3. Two select guide pins, two select return springs and two select return spring bolts into extension case (Figure 37).

Tighten

- Select return spring bolts to 32 N·m (24 lb.ft.).

- Apply a thin coat of Loctite® 414 GM P/N 12345093, or equivalent, to the threaded portion of the reverse gearshift limit bolt.

4. Reverse gearshift limit bolt into gearshift lever case (Figure 39).

Tighten

- Reverse gearshift limit bolt to 35 N·m (26 lb.ft.).

Important

- The portion of the gearshift shaft which has been machined flat must be facing downward toward the inside of the gearshift lever case for correct installation.

5. Gearshift shaft into gearshift lever case while simultaneously installing the gearshift lever, reverse gearshift limit yoke and gearshift limit spring onto the gearshift shaft (Figure 40).
6. Gearshift lever case plug into gearshift lever case.

- Stake gearshift lever case plug in two places (Figure 41).

7. One roll pin into reverse gearshift limit yoke (Figure 40).

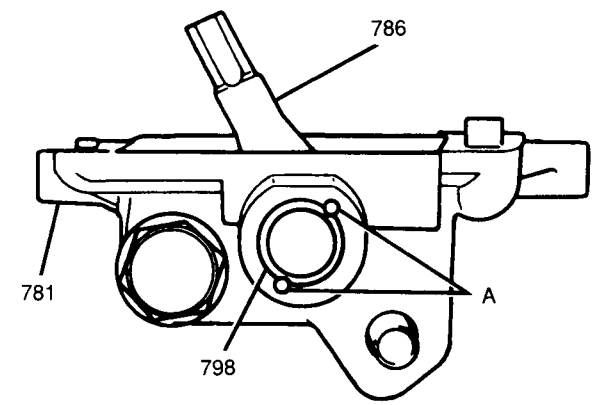

A STAKE MARKS
781 GEARSHIFT LEVER CASE
786 GEARSHIFT LEVER
798 GEARSHIFT LEVER CASE PLUG

NC7438-7B-JT-RS

Figure 41 Gearshift Lever Case Plug Stake Marks (Two-Wheel Drive Models)

8. One inner and outer roll pin into gearshift lever (Figure 40).
9. One roll pin into gearshift shaft for gearshift limit spring (Figure 40).
10. Gearshift control lever bushing into gearshift arm (Figure 39).
11. One inner and outer roll pin and gearshift arm onto gearshift shaft.

- Attach the hooked end of the gearshift limit spring around the roll pin shown in Figure 40. Then, wind the gearshift limit spring until the straight end can be fitted onto groove on the reverse gearshift limit yoke.

GEARSHIFT LEVER CASE INSTALLATION (TWO-WHEEL DRIVE MODELS)

Figures 18, 20, 30, 34 and 35

Install or Connect

- Apply RTV silicone sealer GM P/N 1052917, or equivalent, to the extension case gearshift lever case mating surface.

1. Gearshift lever case to extension case; secure with ten bolts (Figure 35).

Tighten

- Gearshift lever case bolts to 17 N·m (12 lb.ft.).

2. Breather hose to gearshift lever case; secure with one clamp.

- Raise transmission slowly until engine is no longer in contact with the wood block between the bulkhead and the distributor gear housing (Figure 34).
- Remove wood block.

3. Rear transmission crossmember into vehicle; secure with four bolts.

Tighten

- Rear transmission crossmember bolts to 60 N·m (44 lb.ft.).

4. Two bolts to rear transmission mount (Figure 20).

Tighten

- Rear transmission mount bolts to 60 N·m (44 lb.ft.).

- Remove hydraulic jack from underneath transmission.

5. Front pipe/three way catalytic converter (TWC) assembly to vehicle; secure with three nuts at exhaust manifold.

Tighten

- Front pipe/TWC assembly-to-exhaust manifold nuts to 50 N·m (37 lb.ft.).

6. Front pipe/TWC assembly to muffler/tail pipe assembly; secure with two bolts.

Tighten

- Muffler/tail pipe assembly-to-front pipe/TWC assembly bolts to 50 N·m (37 lb.ft.).

7. TWC support bracket to extension case and TWC; secure with two bolts and two nuts.

Tighten

- TWC support bracket bolts and nuts to 60 N·m (44 lb.ft.).

- Remove the speedometer driven gear case retaining bolt.

8. Ground wire to speedometer driven gear case; secure with one bolt (Figure 30).

Tighten

- Speedometer driven gear case retaining bolt to 12 N·m (106 lb.in.).

9. Speedometer cable to speedometer driven gear case (Figure 30).
10. Rear propeller shaft into vehicle aligning index marks made during removal; secure with four bolts and four nuts.

Tighten

- Rear propeller shaft bolts and nuts to 50 N·m (37 lb.ft.).

- Apply Loctite® pipe sealant GM P/N 1052080, or equivalent, to the threaded portion of the transmission drain plug.

11. Transmission drain plug into transmission (Figure 18).

Tighten

- Transmission drain plug to 28 N·m (20 lb.ft.).

- Add approximately 1.5 liters (1.6 qts.) of synthetic 75W-90 GL4 lubricant GM P/N 12345871, or equivalent, into the transmission oil level/filler plug hole. Oil level should be even with the bottom of the transmission oil level/filler plug hole.
- Apply Loctite® pipe sealant GM P/N 1052080, or equivalent, to the threaded portion of the transmission oil level/filler plug.

12. Transmission oil level/filler plug into transmission (Figure 18).

Tighten

- Transmission oil level/filler plug to 28 N·m (20 lb.ft.).

- Lower vehicle.

13. Four bolts to fan shroud at radiator.

Tighten

- Fan shroud bolts to 10 N·m (89 lb.in.).

14. Gearshift control lever into gearshift lever case. Refer to "Gearshift Control Lever" earlier in this section.

REAR CASE, REAR CASE OIL SEAL AND REAR CASE COUNTERSHAFT PLUG (FOUR-WHEEL DRIVE MODELS)

Figures 19, 34 and 42 through 46

Remove or Disconnect

Tools Required:
J 29369-1 Output Shaft Bearing Remover
J 23907 Slide Hammer
J 35664 Bearing Installer

1. Gearshift control lever from gearshift lever case. Refer to "Gearshift Control Lever" earlier in this section.

Important

- After removing the gearshift control lever, remove the bolt directly behind the gearshift lever case. This bolt attaches the gearshift lever case to the transfer case and must be removed before transfer case removal can be performed.

2. One bolt from rear of gearshift lever case (Figure 42).

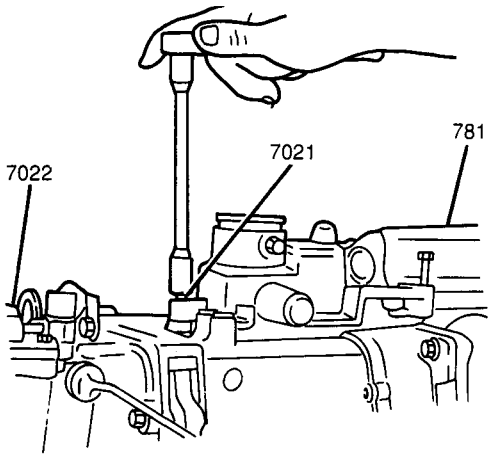

781 GEARSHIFT LEVER CASE
7021 GEARSHIFT LEVER CASE BOLT
7022 TRANSFER CASE
NC7439-7B-JT-RS

Figure 42 Removing Gearshift Lever Case Bolt From Transfer Case (Four-Wheel Drive Models)

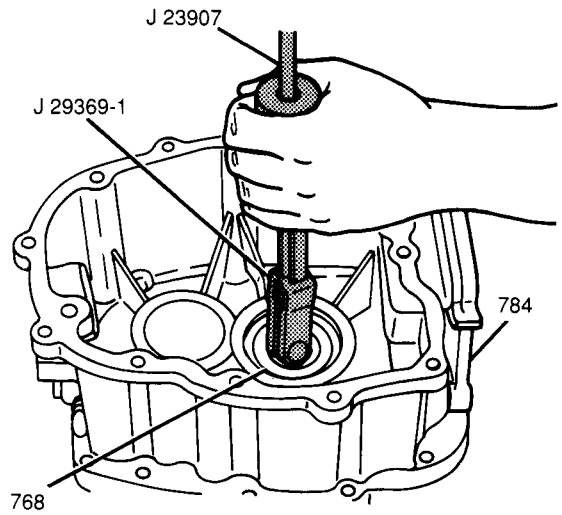

768 REAR CASE OIL SEAL
784 REAR CASE
NC7440-7B-JT-RS

Figure 43 Removing Rear Case Oil Seal (Four-Wheel Drive Models)

3. Transfer case gearshift control lever from transfer case. Refer to SECTION 7D.
4. Four bolts from fan shroud at radiator.
- Raise and suitably support vehicle. Refer to SECTION 0A.
- Place a drain pan or suitable container underneath transmission.
5. Transmission oil level/filler plug from transmission (Figure 19).
6. Transmission drain plug from transmission and drain transmission oil (Figure 19).
7. Two bolts, two nuts and three way catalytic converter (TWC) support bracket from rear case and TWC.
8. Two bolts and separate front pipe/TWC assembly from muffler/tail pipe assembly.
9. Three nuts from exhaust manifold and front pipe/TWC assembly from vehicle.
- Remove drain pan from underneath transmission.
- Support transmission with a suitable hydraulic jack.
10. Transfer case from vehicle. Refer to SECTION 7D.
- Place a wood block with the dimensions shown in Figure 34 between the distributor gear housing and and the bulkhead to prevent the distributor and other components from being damaged when the transmission is lowered.
- Lower transmission slowly until the engine contacts its support point on the wood block.
11. One clamp and breather hose from gearshift lever case.
12. Four bolts and gearshift lever case from rear case.
13. Twelve bolts and rear case from transmission.
14. Rear case oil seal from the rear case using a J 29369-1 with a J 23907 (Figure 43).
15. Rear case countershaft plug from the rear case using a J 35664 and a hammer (Figure 44).

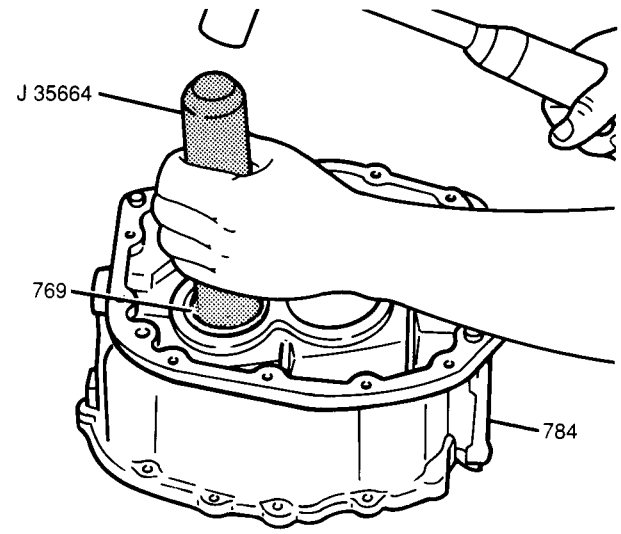

769 REAR CASE COUNTERSHAFT PLUG
784 REAR CASE
NC7441-7B-JT-RS

Figure 44 Removing Rear Case Countershaft Plug (Four-Wheel Drive Models)

Clean

1. Rear case and transmission mating surfaces.
2. Gearshift lever case and rear case mating surfaces.

Inspect

- Rear case for cracks or porosity. If cracks or porosity exist, replace rear case.

Install or Connect

Tools Required:
J 37758 Countershaft Rear Plug Installer
J 8092 Driver Handle
J 37750 Oil Seal Installer
J 36850 Transjel® Transmission Assembly Lubricant

1. Rear case countershaft plug into the rear case using a J 37758 with a J 8092 and a hammer (Figure 45).

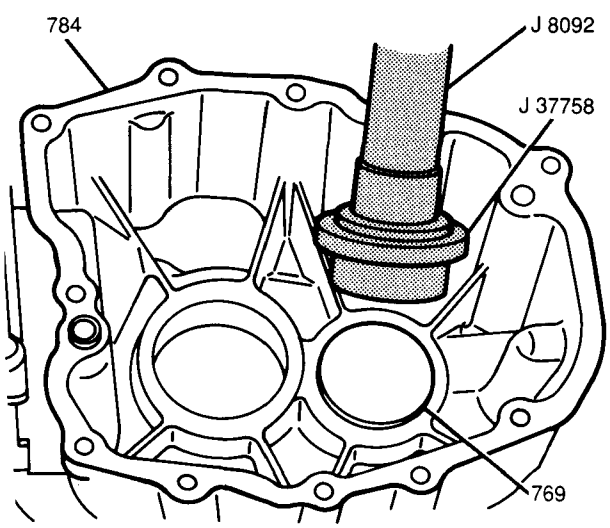

769 REAR CASE COUNTERSHAFT PLUG
784 REAR CASE
NC7442-7B-JT-RS

Figure 45 Installing Rear Case Countershaft Plug (Four-Wheel Drive Models)

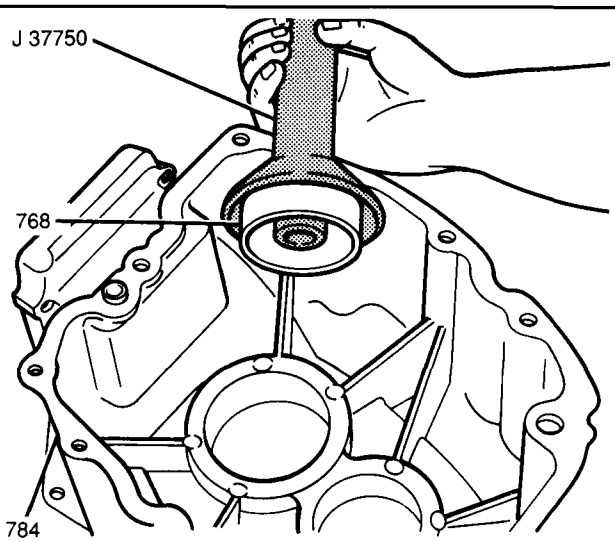

768 REAR CASE OIL SEAL
784 REAR CASE
NC7443-7B-JT-RS

Figure 46 Installing Rear Case Oil Seal (Four-Wheel Drive Models)

2. New rear case oil seal into the rear case using a J 37750 and a hammer (Figure 46).
- Apply J 36850 to the new rear case oil seal lip.
- Apply RTV silicone sealer GM P/N 1052917, or equivalent, to the transmission rear case mating surface.
3. Rear case to transmission; secure with twelve bolts.

Tighten
- Rear case bolts to 28 N·m (20 lb.ft.).

- Apply RTV silicone sealer GM P/N 1052917, or equivalent, to the gearshift lever case mating surface.
4. Gearshift lever case to rear case; secure with four bolts.

Tighten
- Gearshift lever case bolts to 17 N·m (12 lb.ft.).

5. Breather hose to gearshift lever case; secure with one clamp.
- Raise transmission slowly until engine is no longer in contact with the wood block between the bulkhead and the distributor gear housing (Figure 34).
- Remove wood block.
6. Transfer case into vehicle. Refer to SECTION 7D.
- Remove hydraulic jack from underneath transmission.
7. Front pipe/TWC assembly to vehicle; secure with three nuts at exhaust manifold.

Tighten
- Front pipe/TWC assembly-to-exhaust manifold nuts to 50 N·m (37 lb.ft.).

8. Front pipe/TWC assembly to muffler/tail pipe assembly; secure with two bolts.

Tighten
- Muffler/tail pipe assembly-to-front pipe/TWC assembly bolts to 50 N·m (37 lb.ft.).

9. TWC support bracket to rear case and TWC; secure with two bolts and two nuts.

Tighten
- TWC support bracket bolts and nuts to 60 N·m (44 lb.ft.).

- Apply Loctite® pipe sealant GM P/N 1052080, or equivalent, to the threaded portion of the transmission drain plug.
10. Transmission drain plug into transmission (Figure 19).

Tighten
- Transmission drain plug to 28 N·m (20 lb.ft.).

- Add approximately 1.5 liters (1.6 qts.) of synthetic 75W-90 GL4 lubricant GM P/N 12345871, or equivalent, into the transmission oil level/filler plug hole. Oil level should be even with the bottom of the transmission oil level/filler plug hole.

- Apply Loctite® pipe sealant GM P/N 1052080, or equivalent, to the threaded portion of the transmission oil level/filler plug.

11. Transmission oil level/filler plug into transmission (Figure 19).

Tighten

- Transmission oil level/filler plug to 28 N·m (20 lb.ft.).

- Lower vehicle.

12. Four bolts to fan shroud at radiator.

Tighten

- Fan shroud bolts to 10 N·m (89 lb.in.).

13. Transfer case gearshift control lever into transfer case. Refer to SECTION 7D.
14. One bolt into rear of gearshift lever case (Figure 42).

Tighten

- Gearshift lever case bolt to 17 N·m (12 lb.ft.).

15. Gearshift control lever into gearshift lever case. Refer to "Gearshift Control Lever" earlier in this section.

GEARSHIFT LEVER CASE REMOVAL (FOUR-WHEEL DRIVE MODELS)

Figures 19, 34 and 42

Remove or Disconnect

1. Gearshift control lever from gearshift lever case. Refer to "Gearshift Control Lever" earlier in this section.

Important

- After removing the gearshift control lever, remove the bolt directly behind the gearshift lever case. This bolt attaches the gearshift lever case to the transfer case and must be removed before transfer case removal can be performed.

2. One bolt from rear of gearshift lever case (Figure 42).
3. Transfer case gearshift control lever from transfer case. Refer to SECTION 7D.
4. Four bolts from fan shroud at radiator.

- Raise and suitably support vehicle. Refer to SECTION 0A.
- Place a drain pan or suitable container underneath transmission.

5. Transmission oil level/filler plug from transmission (Figure 19).
6. Transmission drain plug from transmission and drain transmission oil (Figure 19).
7. Two bolts, two nuts and three way catalytic converter (TWC) support bracket from rear case and TWC.
8. Two bolts and separate front pipe/TWC assembly from muffler/tail pipe assembly.
9. Three nuts from exhaust manifold and front pipe/TWC assembly from vehicle.

- Remove drain pan from underneath transmission.
- Support transmission with a suitable hydraulic jack.

10. Transfer case from vehicle. Refer to SECTION 7D.

- Place a wood block with the dimensions shown in Figure 34 between the distributor gear housing and and the bulkhead to prevent the distributor and other components from being damaged when the transmission is lowered.
- Lower transmission slowly until the engine contacts its support point on the wood block.

11. One clamp and breather hose from gearshift lever case.
12. Four bolts and gearshift lever case from rear case.

Gearshift Lever Case Disassembly (Four-Wheel Drive Models)

Figures 47, 48 and 49

Remove or Disconnect

1. Four screws and gearshift lever case plate from bottom of gearshift lever case (Figure 47).

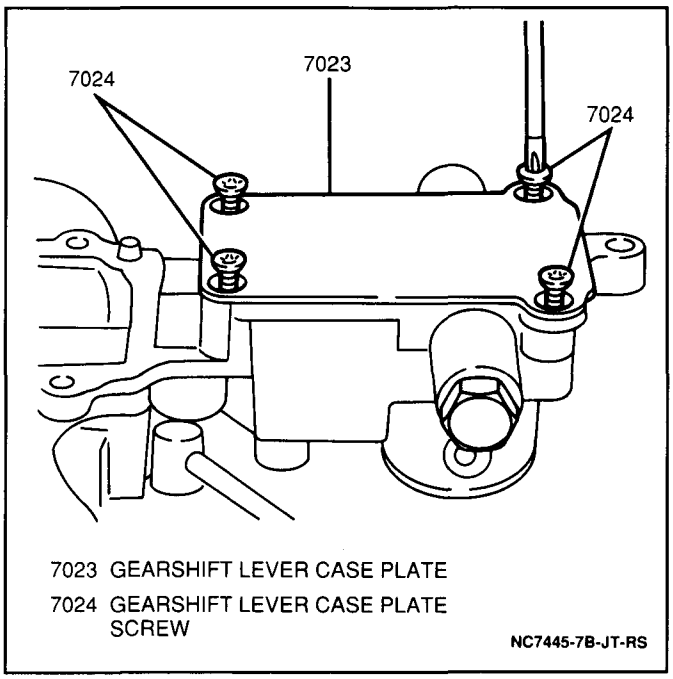

Figure 47 Removing Gearshift Lever Case Plate (Four-Wheel Drive Models)

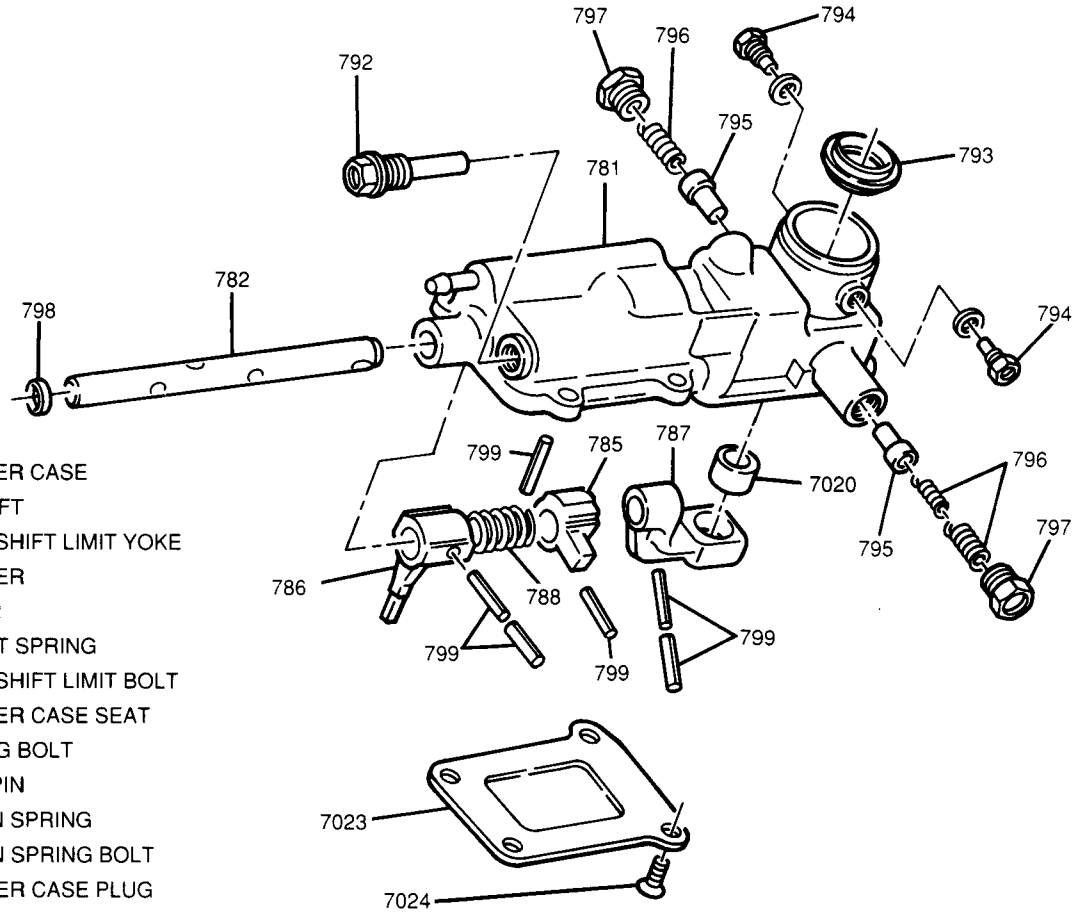

781 GEARSHIFT LEVER CASE
782 GEARSHIFT SHAFT
785 REVERSE GEARSHIFT LIMIT YOKE
786 GEARSHIFT LEVER
787 GEARSHIFT ARM
788 GEARSHIFT LIMIT SPRING
792 REVERSE GEARSHIFT LIMIT BOLT
793 GEARSHIFT LEVER CASE SEAT
794 LEVER LOCATING BOLT
795 SELECT GUIDE PIN
796 SELECT RETURN SPRING
797 SELECT RETURN SPRING BOLT
798 GEARSHIFT LEVER CASE PLUG
799 ROLL PIN
7020 GEARSHIFT CONTROL LEVER BUSHING
7023 GEARSHIFT LEVER CASE PLATE
7024 GEARSHIFT LEVER CASE PLATE SCREW

Figure 48 Gearshift Lever Case Components (Four-Wheel Drive Models)

2. One inner and outer roll pin and gearshift arm from gearshift shaft (Figure 48).
3. Gearshift control lever bushing from gearshift arm (Figure 48).
4. One roll pin from gearshift shaft releasing tension on the gearshift limit spring.
5. One inner and outer roll pin from gearshift lever (Figure 48).
6. One roll pin from reverse gearshift limit yoke.

- Unstake gearshift lever case plug.

7. Gearshift lever case plug from gearshift lever case (Figure 49).

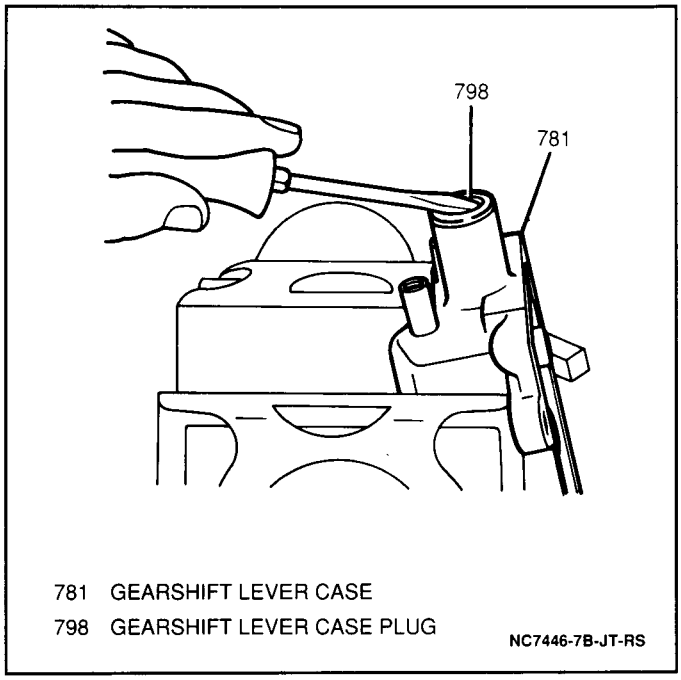

Figure 49 Removing Gearshift Lever Case Plug (Four-Wheel Drive Models)

8. Gearshift shaft from gearshift lever case while simultaneously removing the gearshift lever, reverse gearshift limit yoke and gearshift limit spring from gearshift shaft.
9. Reverse gearshift limit bolt from gearshift lever case (Figure 48).

Important

- The gearshift lever case contains an inner and outer select return spring on the left side only. The right side contains a single select return spring. Note the location of these springs to ensure correct assembly (Figure 48).

10. Two select return spring bolts, three select return springs and two select guide pins from gearshift lever case (Figure 48).
11. Two lever locating bolts and washers from gearshift lever case (Figure 48).
12. Gearshift lever case seat from gearshift lever case (Figure 48).

Clean

- All components thoroughly with solvent and air dry.

Inspect

1. Gearshift shaft by inserting into gearshift lever case and working back and forth while feeling for any binding. If gearshift shaft does not move freely in and out of the gearshift lever case, replace the gearshift lever case and gearshift shaft.
2. Gearshift lever, reverse gearshift limit yoke and gearshift arm for smooth fit and movement on gearshift shaft. If any of the above components bind on the gearshift shaft, replace the gearshift shaft, gearshift lever, reverse gearshift limit yoke and gearshift arm.
3. Gearshift limit spring for weakness or distortion. Replace as necessary.
4. Gearshift control lever bushing for excessive wear. Replace as necessary.
5. Gearshift lever case seat for excessive wear. Replace as necessary.

Gearshift Lever Case Assembly (Four-Wheel Drive Models)

Figures 48, 50 and 51

Install or Connect

Tool Required:
J 36850 Transjel® Transmission Assembly Lubricant

- Apply a thin coat of J 36850 to all components prior to assembly.

1. Gearshift lever case seat into gearshift lever case (Figure 48).
2. Two lever locating bolts and washers into gearshift lever case (Figure 48).

Tighten

- Lever locating bolts to 20 N·m (15 lb.ft.).

3. Two select guide pins, three select return springs and two select return spring bolts into gearshift lever case (Figure 48).

Tighten

- Select return spring bolts to 32 N·m (24 lb.ft.).

- Apply a thin coat of Loctite® 414 GM P/N 12345093, or equivalent, to the threaded portion of the reverse gearshift limit bolt (Figure 48).

4. Reverse gearshift limit bolt into gearshift lever case.

Tighten

- Reverse gearshift limit bolt to 35 N·m (26 lb.ft.).

Important

- The portion of the gearshift shaft which has been machined flat must be facing downward toward the inside of the gearshift lever case for correct installation.

5. Gearshift shaft into shift gearshift lever case while simultaneously installing the gearshift lever, reverse gearshift limit yoke and gearshift limit spring onto the gearshift shaft.
6. Gearshift lever case plug into gearshift lever case.
- Stake gearshift lever case plug in two places.
7. One roll pin into reverse gearshift limit yoke.
8. Two roll pins into gearshift lever.
9. One roll pin into gearshift shaft for gearshift limit spring.

10. Gearshift control lever bushing into gearshift arm.
11. Two roll pins and gearshift arm onto gearshift shaft.
- Attach the hooked end of the gearshift limit spring around the gearshift limit spring roll pin. Then, wind the gearshift limit spring until the straight end can be fitted onto groove on the reverse gearshift limit yoke (Figure 50).

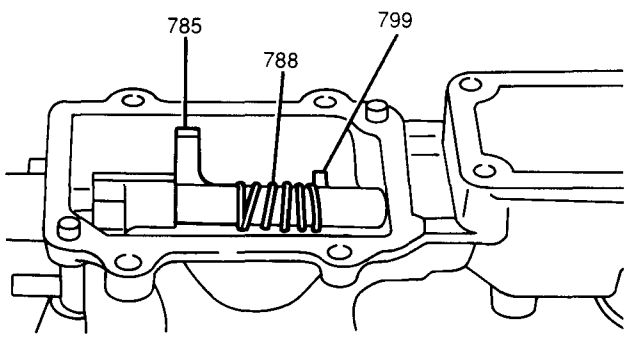

785 REVERSE GEARSHIFT LIMIT YOKE
788 GEARSHIFT LIMIT SPRING
799 ROLL PIN
NC7447-7B-JT-RS

Figure 50 Gearshift Limit Spring and Roll Pin (Four-Wheel Drive Models)

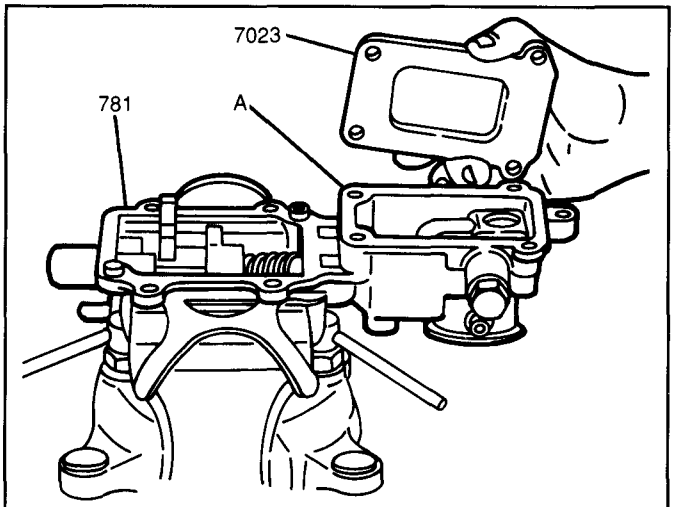

A APPLY RTV SILICONE SEALER GM P/N 1052917, OR EQUIVALENT
781 GEARSHIFT LEVER CASE
7023 GEARSHIFT LEVER CASE PLATE
NC7448-7B-JT-RS

Figure 51 Installing Gearshift Lever Case Plate (Four-Wheel Drive Models)

- Apply RTV silicone sealer GM P/N 1052917, or equivalent, to the gearshift lever plate mating surface (Figure 51).
12. Gearshift lever case plate onto bottom of gearshift lever case; secure with four screws (Figure 47).

GEARSHIFT LEVER CASE INSTALLATION (FOUR-WHEEL DRIVE MODELS)

Figures 18, 34 and 42

Install or Connect

- Apply RTV silicone sealer GM P/N 1052917, or equivalent, to the gearshift lever case mating surface.
1. Gearshift lever case to rear case; secure with four bolts.

Tighten

- Gearshift lever case bolts to 17 N·m (12 lb.ft.).

2. Breather hose to gearshift lever case; secure with one clamp.
- Raise transmission slowly until engine is no longer in contact with the wood block between the bulkhead and the distributor gear housing (Figure 34).
- Remove wood block.
3. Transfer case into vehicle. Refer to SECTION 7D.
- Remove hydraulic jack from underneath transmission.
4. Front pipe/three way catalytic converter (TWC) assembly to vehicle; secure with three nuts at exhaust manifold.

Tighten

- Front pipe/TWC assembly-to-exhaust manifold nuts to 50 N·m (37 lb.ft.).

5. Front pipe/TWC assembly to muffler/tail pipe assembly; secure with two bolts.

Tighten

- Muffler/tail pipe assembly-to-front pipe/TWC assembly bolts to 50 N·m (37 lb.ft.).

6. TWC support bracket to rear case and catalytic converter; secure with two bolts and two nuts.

Tighten

- TWC support bracket bolts and nuts to 60 N·m (44 lb.ft.).

- Apply Loctite® pipe sealant GM P/N 1052080, or equivalent, to the threaded portion of the transmission drain plug.
7. Transmission drain plug into transmission (Figure 19).

Tighten

- Transmission drain plug to 28 N·m (20 lb.ft.).

- Add approximately 1.5 liters (1.6 qts.) of synthetic 75W-90 GL4 lubricant GM P/N 12345871, or equivalent, into the transmission oil level/filler plug hole. Oil level should be even with the bottom of the transmission oil level/filler plug hole.

- Apply Loctite® pipe sealant GM P/N 1052080, or equivalent, to the threaded portion of the transmission oil level/filler plug.

8. Transmission oil level/filler plug into transmission (Figure 19).

Tighten

- Transmission oil level/filler plug to 28 N·m (20 lb.ft.).

- Lower vehicle.

9. Four bolts to fan shroud at radiator.

Tighten

- Fan shroud bolts to 10 N·m (89 lb.in.).

10. Transfer case gearshift control lever into transfer case. Refer to SECTION 7D.
11. One bolt into rear of gearshift lever case (Figure 41).

Tighten

- Gearshift lever case bolt to 17 N·m (12 lb.ft.).

12. Gearshift control lever into gearshift lever case. Refer to "Gearshift Control Lever" earlier in this section.

TRANSMISSION ASSEMBLY

Figures 18, 19, 20, 28, 30, 34, 42 and 52 through 56

Remove or Disconnect

1. Negative (-) battery cable.
2. Gearshift control lever from gearshift lever case. Refer to "Gearshift Control Lever" earlier in this section.

Important

- After removing the gearshift control lever, remove the bolt directly behind the gearshift lever case. This bolt attaches the gearshift lever case to the transfer case and must be removed before transfer case removal can be performed.

3. One bolt from rear of gearshift lever case (Four-Wheel Drive Models) (Figure 42).
4. Transfer case gearshift control lever from transfer case (Four-Wheel Drive Models). Refer to SECTION 7D.
5. Four bolts from fan shroud at radiator.
6. Two upper transmission-to-engine bolts from transmission.

- Raise and suitably support vehicle. Refer to SECTION 0A.
- Place a drain pan or suitable container underneath transmission.

7. Transmission oil level/filler plug from transmission (Figures 18 and 19).
8. Transmission drain plug from transmission and drain transmission oil (Figures 18 and 19).
9. Backup lamp switch electrical connector from backup lamp switch (Figure 28).
10. Starter motor electrical connections from starter motor.
11. Two bolts, one nut and starter motor from transmission.
12. Transfer case from vehicle (Four-Wheel Drive Models). Refer to SECTION 7D.

- Place index marks on the propeller shaft pinion flange yoke and differential pinion flange to ensure correct installation (Two-Wheel Drive Models).

13. Four bolts, four nuts and rear propeller shaft from vehicle (Two-Wheel Drive Models).
14. Four bolts and front skid plate from vehicle (if equipped).
15. Speedometer cable from speedometer driven gear case (Two-Wheel Drive Models) (Figure 30).
16. One bolt and ground wire from speedometer driven gear case (Two-Wheel Drive Models) (Figure 30).

- Temporarily install the speedometer driven gear case retaining bolt.

17. Two bolts, two nuts and three way catalytic converter (TWC) support bracket from extension housing and TWC (Two-Wheel Drive Models).
18. Two bolts, two nuts and TWC support bracket from rear case and TWC (Four-Wheel Drive Models).
19. Two bolts and separate front pipe/TWC assembly from muffler/tail pipe assembly.
20. Three nuts from exhaust manifold and front pipe/TWC assembly from vehicle.

- Remove drain pan from underneath transmission.
- Support transmission with a suitable hydraulic jack.

21. Two bolts from rear transmission mount (Two-Wheel Drive Models) (Figure 20).
22. Four bolts and rear transmission crossmember from vehicle (Two-Wheel Drive Models).

Important

- Observe the alignment marks on the clutch release lever and clutch release shaft. Make sure the clutch release shaft and the clutch release lever are properly aligned during installation to ensure correct clutch adjustment (Figure 52).

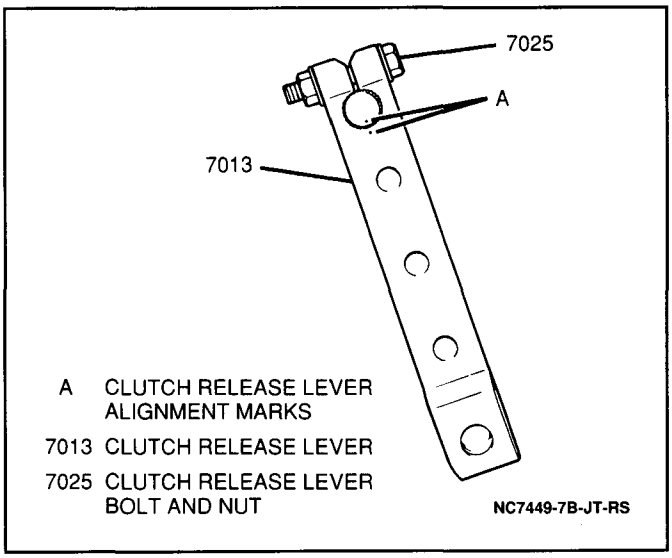

Figure 52 Clutch Release Lever Alignment Marks

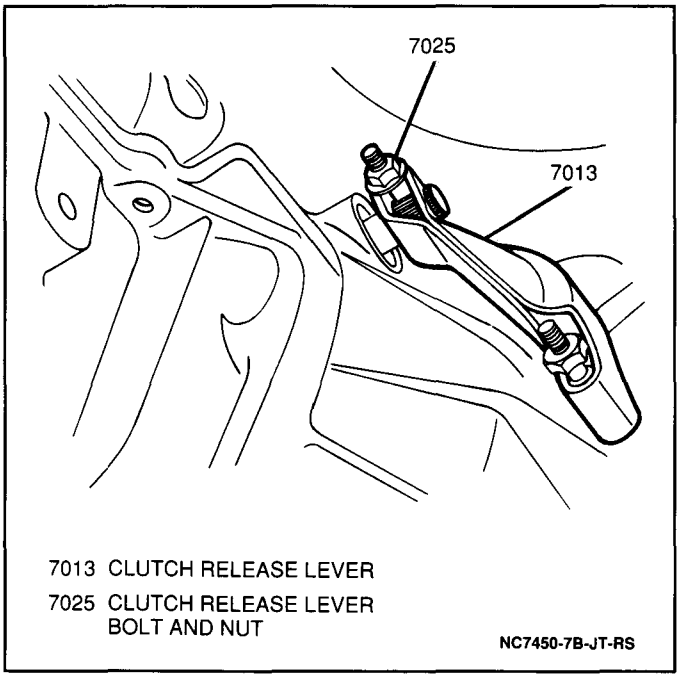

Figure 53 Clutch Release Lever Bolt and Nut

23. One bolt, one nut and clutch release lever from clutch release shaft (Figure 53).
24. Two bolts from flywheel inspection cover.
    - Place a wood block with the dimensions shown in Figure 34 between the distributor gear housing and the bulkhead to prevent the distributor and other components from being damaged when the transmission is lowered.
    - Lower transmission slowly until engine contacts its support point on the wood block.
25. One clamp and breather hose from gearshift lever case.
26. Two bolts and flywheel inspection cover from left transmission-to-engine reinforcement brace (Figure 54).
27. Two bolts from right transmission-to-engine reinforcement brace (Figure 55).
28. Two lower transmission-to-engine nuts from transmission.
29. Transmission from vehicle by carefully moving the transmission away from the engine toward the rear of the vehicle until the input shaft is clear of the clutch pressure plate cover. Then, very slowly lower the transmission jack making sure there are no obstructions.

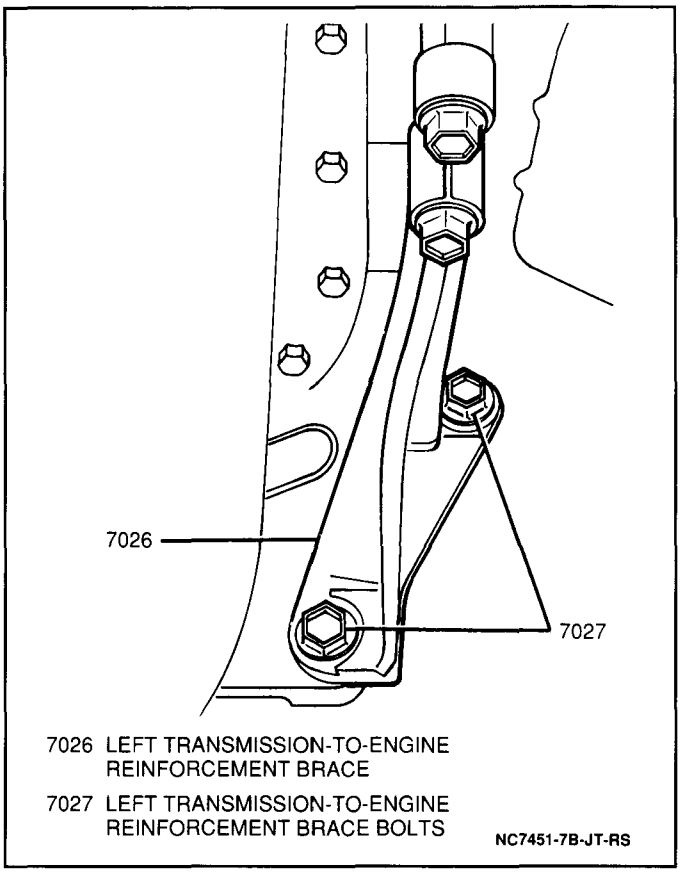

Figure 54 Left Transmission-to-Engine Reinforcement Brace Bolts

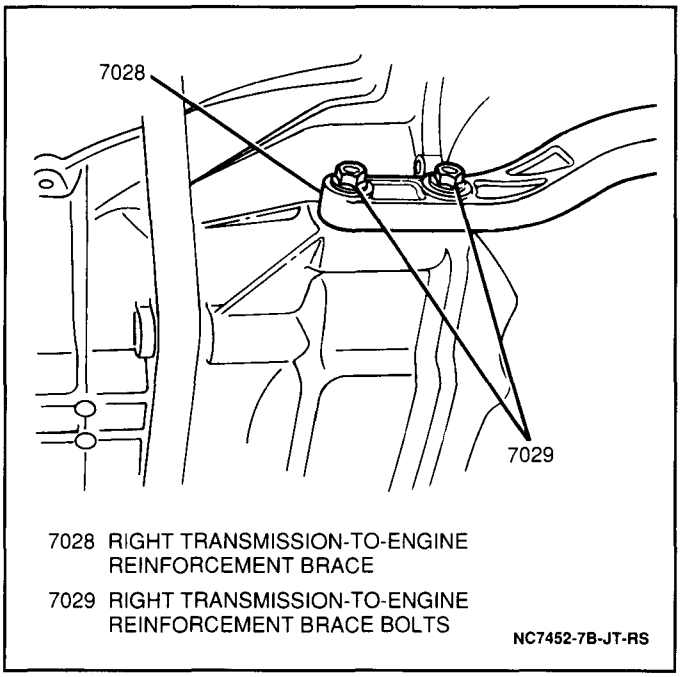

Figure 55 Right Transmission-to-Engine Reinforcement Brace Bolts

Inspect

- For disassembly and inspection procedures, refer to SECTION 7B-10 (Two-Wheel Drive Models), or SECTION 7B-11 (Four-Wheel Drive Models).

Install or Connect

Inspect

Tool Required:
J 37761 Clutch Alignment Arbor

- Clutch alignment by inserting a J 37761 through the clutch disc and into the crankshaft pilot bearing (Figure 56). If the J 37761 does not fit through the clutch disc and into the pilot bearing smoothly, the clutch disc may be misaligned. For clutch disassembly and inspection procedures, refer to SECTION 7C and align if necessary.

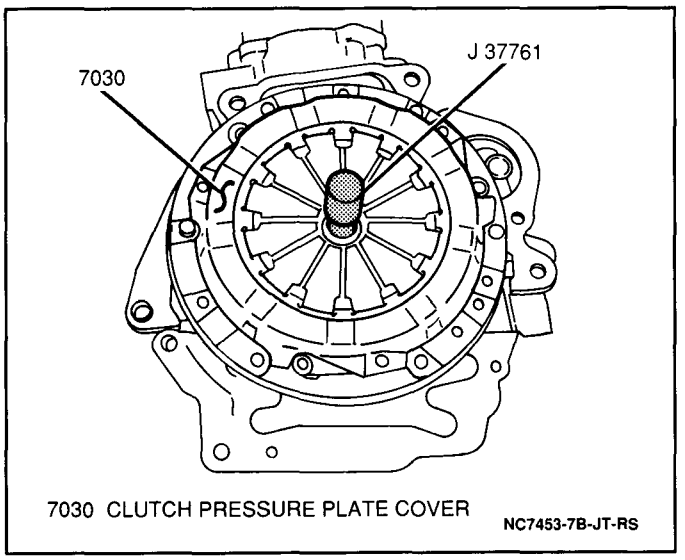

Figure 56 Aligning Clutch Disc

1. Transmission to engine by raising the transmission into position and moving the transmission toward the engine while simultaneously inserting the transmission input shaft through the pressure plate cover and clutch disc into the crankshaft pilot bearing.
2. Two lower transmission-to-engine nuts into transmission.

Tighten

- Lower transmission-to-engine nuts to 100 N·m (72 lb.ft.).

3. Two bolts into right transmission-to-engine reinforcement brace (Figure 55).

Tighten

- Right transmission-to-engine reinforcement brace bolts to 100 N·m (72 lb.ft.).

4. Flywheel inspection cover and two bolts into left transmission-to-engine reinforcement brace (Figure 53).

Tighten

- Left transmission-to-engine reinforcement brace bolts to 100 N·m (72 lb.ft.).

5. Breather hose to gearshift lever case; secure with one clamp.

- Raise transmission slowly until engine is no longer in contact with the wood block between the bulkhead and the distributor gear housing (Figure 34).
- Remove wood block.

6. Two bolts into flywheel inspection cover.

Tighten

- Flywheel inspection cover bolts to 10 N·m (89 lb.in.).

7. One bolt, one nut and clutch release lever onto clutch release shaft making sure to match alignment marks on both; secure with one bolt and one nut (Figures 52 and 53).

Tighten

- Clutch release lever bolt and nut to 24 N·m (17 lb.ft.).

8. Rear transmission crossmember to vehicle; secure with four bolts (Two-Wheel Drive Models).

Tighten

- Rear transmission crossmember bolts to 60 N·m (44 lb.ft.).

9. Two bolts into rear transmission mount (Two-Wheel Drive Models) (Figure 20).

Tighten

- Rear transmission mount bolts to 60 N·m (44 lb.ft.).

- Remove hydraulic jack from underneath transmission.

10. Front pipe/TWC assembly to vehicle; secure with three nuts at exhaust manifold.

Tighten

- Front pipe/TWC assembly-to-exhaust manifold nuts to 50 N·m (37 lb.ft.).

11. Front pipe/TWC assembly to muffler/tail pipe assembly; secure with two bolts.

Tighten

- Muffler/tail pipe assembly-to-front pipe/TWC assembly bolts to 50 N·m (37 lb.ft.).

12. TWC support bracket to rear case and TWC; secure with two bolts and two nuts (Four-Wheel Drive Models).

Tighten

- TWC support bracket bolts and nuts to 60 N·m (44 lb.ft.).

13. TWC support bracket to extension housing and TWC; secure with two bolts and two nuts (Two-Wheel Drive Models).

Tighten

- TWC support bracket bolts and nuts to 60 N·m (44 lb.ft.).

- Remove speedometer driven gear case retaining bolt.

14. Ground wire to speedometer driven gear case; secure with one bolt (Figure 30).

Tighten

- Speedometer driven gear case retaining bolt to 12 N·m (106 lb.in.).

15. Speedometer cable from speedometer driven gear case (Two-Wheel Drive Models)(Figure 30).
16. Front skid plate to vehicle; secure with four bolts (if equipped).

Tighten

- Front skid plate bolts to 54 N·m (40 lb.ft.).

17. Rear propeller shaft into vehicle aligning index marks made during removal; secure with four nuts and four bolts (Two-Wheel Drive Models).

Tighten

- Rear propeller shaft nuts and bolts to 50 N·m (37 lb.ft.).

18. Transfer case into vehicle (Four-Wheel Drive Models). Refer to SECTION 7D.
19. Starter motor to transmission; secure with two bolts and one nut.

Tighten

- Starter motor bolts and nut to 30 N·m (22 lb.ft.).

20. Starter motor electrical connections to starter motor.
21. Backup lamp switch electrical connector to backup lamp switch (Figure 28).

- Apply Loctite® pipe sealant GM P/N 1052080, or equivalent, to the threaded portion of the transmission drain plug.

22. Transmission drain plug into transmission (Figures 18 and 19).

Tighten

- Transmission drain plug to 28 N·m (20 lb.ft.).

- Add approximately 1.5 liters (1.6 qts.) of synthetic 75W-90 GL4 lubricant GM P/N 12345871, or equivalent, into the transmission oil level/filler plug hole. Oil level should be even with the bottom of the transmission oil level/filler plug hole.
- Apply Loctite® pipe sealant GM P/N 1052080, or equivalent, to the threaded portion of the transmission oil level/filler plug.

23. Transmission oil level/filler plug into transmission (Figures 18 and 19).

Tighten

- Transmission oil level/filler plug to 28 N·m (20 lb.ft.).

- Lower vehicle.

24. Two upper transmission-to-engine bolts into transmission.

Tighten

- Upper transmission-to-engine bolts to 100 N·m (72 lb.ft.).

25. Four bolts from fan shroud at radiator.

Tighten

- Fan shroud bolts to 10 N·m (89 lb.in.).

26. Transfer case gearshift control lever into transfer case (Four-Wheel Drive Models). Refer to SECTION 7D.
27. One bolt into rear of gearshift lever case (Four-Wheel Drive Models) (Figure 42).

Tighten

- Gearshift lever case bolt to 17 N·m (12 lb.ft.).

28. Gearshift control lever into gearshift lever case. Refer to "Gearshift Control Lever" earlier in this section.
29. Negative (-) battery cable.

Tighten

- Negative (-) battery cable-to-negative (-) battery terminal retainer to 15 N·m (11 lb.ft.).

SPECIFICATIONS

FASTENER TORQUES

Transmission Oil Level/Filler Plug	28 N·m (20 lb.ft.)
Transmission Drain Plug	28 N·m (20 lb.ft.)
Rear Transmission Mount Bolts (Two-Wheel Drive Models)	60 N·m (44 lb.ft.)
Rear Transmission Crossmember Bolts (Four-Wheel Drive Models)	60 N·m (44 lb.ft.)
Speedometer Driven Gear Case Bolt	12 N·m (106 lb.in.)
Gearshift Control Lever Lower Boot Plate Bolts	7 N·m (62 lb.in.)
Rear Propeller Shaft Bolts and Nuts (Two-Wheel Drive Models)	50 N·m (37 lb.ft.)
Backup Lamp Switch	23 N·m (17 lb.ft.)
Extension Case Bolts	28 N·m (20 lb.ft.)
Gearshift Lever Case Bolts	17 N·m (12 lb.ft.)
Front Pipe/Three Way Catalytic Converter (TWC) Assembly-to-Exhaust Manifold Nuts	50 N·m (37 lb.ft.)
Muffler/Tail Pipe Assembly-to-Front Pipe/Three Way Catalytic Converter (TWC) Assembly Bolts	50 N·m (37 lb.ft.)
Three Way Catalytic Converter (TWC) Support Bracket Bolts	60 N·m (44 lb.ft.)
Fan Shroud Bolts	10 N·m (89 lb.in.)
Lever Locating Bolts	20 N·m (15 lb.ft.)
Select Return Spring Bolts	32 N·m (24 lb.ft.)
Reverse Gearshift Limit Bolt	35 N·m (26 lb.ft.)
Rear Case Bolts (Four-Wheel Drive Models)	28 N·m (20 lb.ft.)
Front Skid Plate Bolts	54 N·m (40 lb.ft.)
Lower Transmission-to-Engine Nuts	100 N·m (72 lb.ft.)
Right Transmission-to-Engine Reinforcement Brace Bolts	100 N·m (72 lb.ft.)
Left Transmission-to-Engine Reinforcement Brace Bolts	100 N·m (72 lb.ft.)
Flywheel Inspection Cover Bolts	10 N·m (89 lb.in.)
Clutch Release Lever Bolt and Nut	24 N·m (17 lb.ft.)
Starter Motor Bolts and Nut	30 N·m (22 lb.ft.)
Upper Transmission-to-Engine Bolts	100 N·m (72 lb.ft.)
Negative (-) Battery Cable-to-Negative (-) Battery Terminal Retainer	15 N·m (11 lb.ft.)

OIL CAPACITY (approximate)

Manual Transmission Drain and Refill	1.5 Liters (1.6 qts.)
Oil Recommended	Synthetic 75W-90 GL4 Lubricant GM P/N 12345871, or equivalent

SERVICE PARTS INFORMATION

Component Name Used in Section 7B	Reference Name in Service Parts Catalog	Group Number
Clutch Housing	Housing, Clutch	0.683
Upper Case	Transmission ASM	4.003
Lower Case	Transmission ASM	4.003
Input Shaft Bearing Retainer	Retainer, Input Shaft Bearing	4.104
Extension Case	Case, Extension	4.317
Extension Case Bolts	Bolt, Trans Rear Case (M8x1.25x30)	4.107
Extension Case Oil Seal	Seal, Case Extension	4.318
Rear Transmission Mount	Mounting, Eng to Member RR	0.027
Rear Transmission Mount Bolts	Bolt, Eng RR Mounting	0.004
Rear Case	Transmission ASM	4.003
Rear Case Oil Seal	Seal, Main Shaft Oil W/Manual Trans	4.399
Rear Case Countershaft Plug	Plug, Countershaft Rear Bearing	4.422
Transmission Drain Plug	Plug, Oil Drain	4.105
Oil Level/Filler Plug	Plug, Oil Filler and Level	4.133
Reverse Idler Shaft Bolt	Bolt, Transmission Shaft Reverse Idler Shaft	4.435
Speedometer Drive Gear	Gear, Speedo Drive	4.343
Speedometer Driven Gear	Gear, Speedo Driven	4.347
Speedometer Drive Gear Retaining Ring	Circlip, Gear	4.412
Speedometer Driven Gear Case	Case, Speedo Driven Gear	4.329
Speedometer Driven Gear Case O-Ring	O-Ring, Speedo Driven Gear Case	4.330
Speedometer Driven Gear Lip Seal	Seal, Oil	4.330

Speedometer Driven Gear Roll Pin	Pin, Speedo Driven Gear	4.337

Component Name Used in Section 7B	Reference Name in Service Parts Catalog	Group Number
Speedometer Driven Gear Case Retaining Bolt	Bolt, Speedo Driven Gear Case	4.329
Backup Lamp Switch	Switch ASM, Backup Lamp	2.698
Backup Lamp Switch Electrical Connector	Switch ASM, Backup Lamp	2.698
Gearshift Lever Case	Case, Gear Shift Lever	4.105
Gearshift Shaft	Shaft, Gear Shift	4.302
Gearshift Control Lever	Lever, Gear Shift Control	4.006
Reverse Gearshift Limit Yoke.	Yoke, Reverse Gear Shift	4.303
Gearshift Lever	Lever, Gear Shift	4.302
Gearshift Arm	Arm, Gear Shift	4.303
Gearshift Limit Spring	Spring, Gear Shift Limiting	4.307
Reverse Gearshift Limit Bolt	Bolt, Reverse Gear Shift Limiting	4.302
Gearshift Lever Case Seat	Seat, Gear Shift Lever Case	4.012
Lever Locating Bolt	Bolt, Gear Shift Lever Locating	4.307
Select Guide Pin	Pin, Select Guide	4.302
Select Return Spring	Spring, Select Return	4.307
Select Return Spring Bolt	Bolt, Selector Return Spring	4.307
Gearshift Lever Case Plug	Plug, Gear Shift Shaft	4.103
Roll Pin	Pin, Roll	4.302
Boot Plate	Plate, Gear Shift Control Lever	4.015
Gearshift Control Lever Lower Boot	Cover, Gear Shift Control Boot	4.015
Gearshift Control Lever Upper Boot	Boot, Gear Shift Control Lever	4.015
Gearshift Lever Case Boot	Boot, Gear Shift Lever Case	N.S.
Gearshift Lever Case Boot Clamp	Clamp, Gear Shift Control Lever Boot	4.015
Gearshift Control Lever Pivot	Pivot, Gear Shift Control Lever	N.S.
Gearshift Control Lever Bushing	Bushing, Gear Control Lever	4.307
Gearshift Lever Case Bolt	Bolt, Case (M8x1.25x25)	4.311
Gearshift Lever Case Plate	Plate, Gear Shift Case	4.105
Gearshift Lever Case Plate Screw	Screw, Plate Gear Shift Case	4.319
Left Transmission-to-Engine Reinforcement Brace	Stiffener, Block & Case LH	4.081
Left Transmission-to-Engine Reinforcement Brace Bolts	Bolt, Clutch Housing MTG (M10x1.25x50)	0.685
Right Transmission-to-Engine Reinforcement Brace	Stiffener, Block & Case RH	4.081
Right Transmission-to-Engine Reinforcement Brace Bolts	Bolt, Stiffener MTG RH (M10x1.25x40)	0.685
Clutch Release Shaft	Shaft, Eng Clutch Release	0.795
Clutch Release Lever	Arm, Engine Clutch Release Shaft	0.796
Clutch Release Lever Bolt and Nut	Bolt, Eng Clutch Release Arm M8x1.25x40	0.864

SPECIAL TOOLS

1
J 28428-D

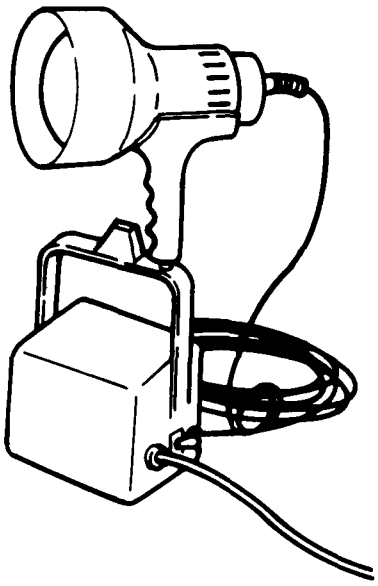

4
J 23129

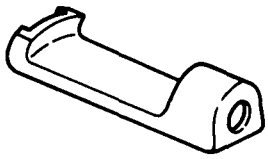

5
J 37750

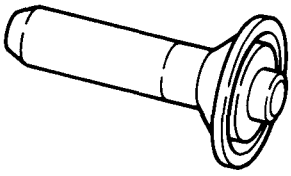

2
J 28431-6

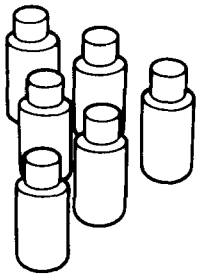

6
J 36850

3
J 6125-B

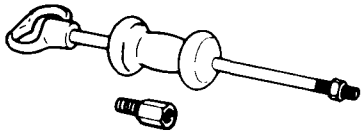

1 HIGH INTENSITY BLACK LIGHT
2 FLUORESCENT OIL ADDITIVE
3 SLIDE HAMMER
4 CONVERTER HOUSING SEAL AND EXTENSION HOUSING OIL SEAL REMOVER
5 OIL SEAL INSTALLER
6 TRANSJEL® TRANSMISSION ASSEMBLY LUBRICANT

NC7454-7B-JT-RS

7
J 34833

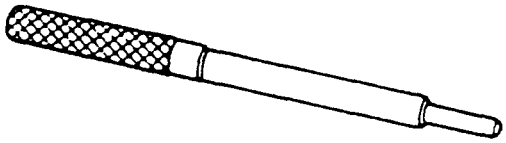

10
J 35664

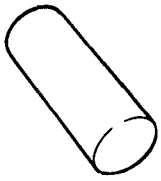

11
J 37758

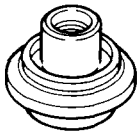

8
J 29369-1

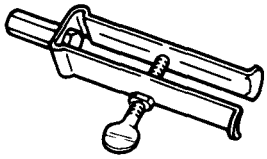

12
J 8092

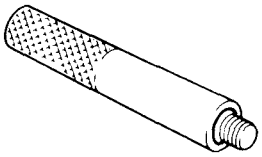

9
J 23907

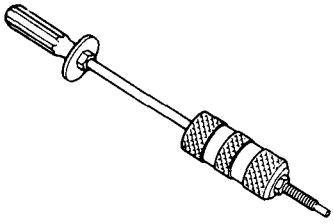

13
J 37761

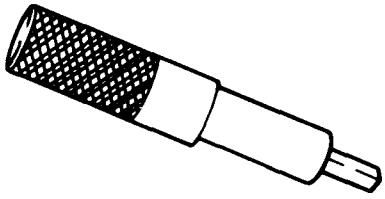

7 VALVE GUIDE REMOVER
8 OUTPUT SHAFT BEARING REMOVER
9 SLIDE HAMMER
10 BEARING INSTALLER
11 COUNTERSHAFT REAR PLUG INSTALLER
12 DRIVER HANDLE
13 CLUTCH ALIGNMENT ARBOR

NC7455-7B-JT-RS

SECTION 7B-10

2WD MANUAL TRANSMISSION – UNIT REPAIR

NOTICE: When fasteners are removed, always reinstall them at the same location from which they were removed. If a fastener needs to be replaced, use the correct part number fastener for that application. If the correct part number fastener is not available, a fastener of equal size and strength (or stronger) may be used. Fasteners that are not used, and those requiring thread-locking compound, will be called out.The correct torque values must be used when installing fasteners that require them. If the above procedures are not followed, parts or system damage could result.

CONTENTS

Unit Repair 7B-10-1
Manual Transmission Disassembly 7B-10-1
Lower Case, Countershaft and Reverse Idler Gear 7B-10-2
Input Shaft 7B-10-8
Main Shaft 7B-10-10
Upper Case, Gearshift Shafts and Gearshift Forks 7B-10-19
Extension Case 7B-10-24
Gearshift Lever Case 7B-10-25
Manual Transmission Assembly 7B-10-27
Specifications 7B-10-30
Fastener Torques 7B-10-30
Manual Transmission Specifications 7B-10-30
Service Parts Information 7B-10-30
Special Tools 7B-10-32

UNIT REPAIR

MANUAL TRANSMISSION DISASSEMBLY

Figures 1 through 4

Remove or Disconnect

Tool Required:
J 37637 Case Separator

1. Clutch release bearing from input shaft.
2. Eight clutch housing bolts and clutch housing from upper and lower case (Figure 1).

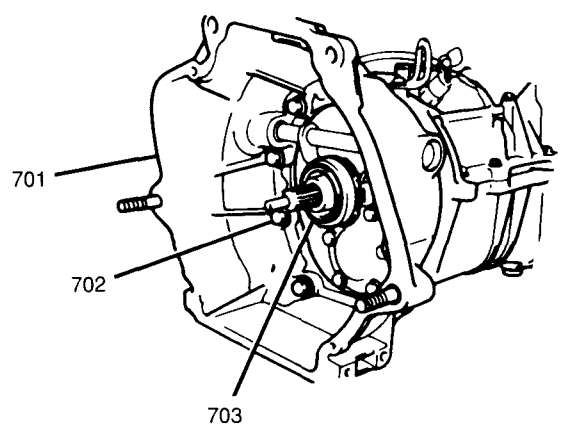

701 CLUTCH HOUSING
702 CLUTCH HOUSING BOLT
703 CLUTCH RELEASE BEARING

NC7101-7B1-JT-RS

Figure 1 Clutch Housing and Release Bearing

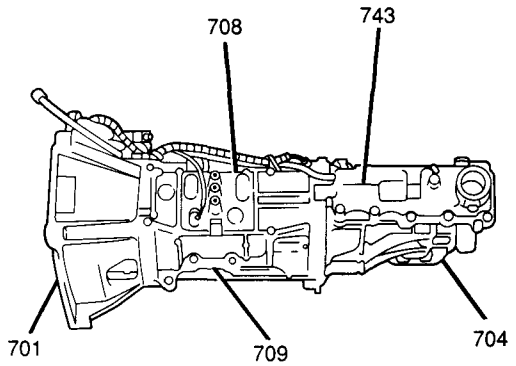

701 CLUTCH HOUSING
704 EXTENSION CASE
708 UPPER CASE
709 LOWER CASE
743 GEARSHIFT LEVER CASE

NC7202-7B1-JT-RS

Figure 2 Manual Transmission Case Components

3. Ten bolts and gearshift lever case from extension case (Figure 2).
4. Twelve bolts and extension case from upper and lower case (Figure 2).

5. Eight bolts from input shaft bearing retainer. Thread the last two bolts into the unused holes of the input shaft bearing retainer flange (Figure 3), and tighten until the bolts push against the transmission case allowing the input shaft bearing retainer to be removed.

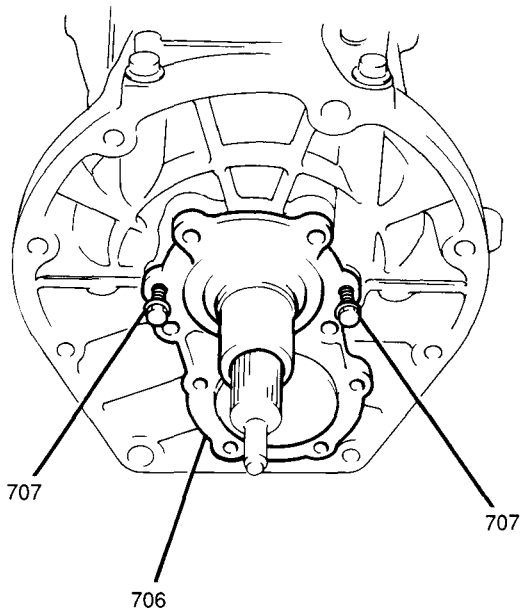

706 INPUT SHAFT BEARING RETAINER
707 INPUT SHAFT BEARING RETAINER BOLTS
NC7103-7B1-JT-RS

Figure 3 Input Shaft Bearing Retainer Removal

6. Input shaft bearing retainer from upper and lower case.
7. Ten upper-to-lower case retaining bolts and separate upper and lower case halves using a J 37637 (Figure 4).

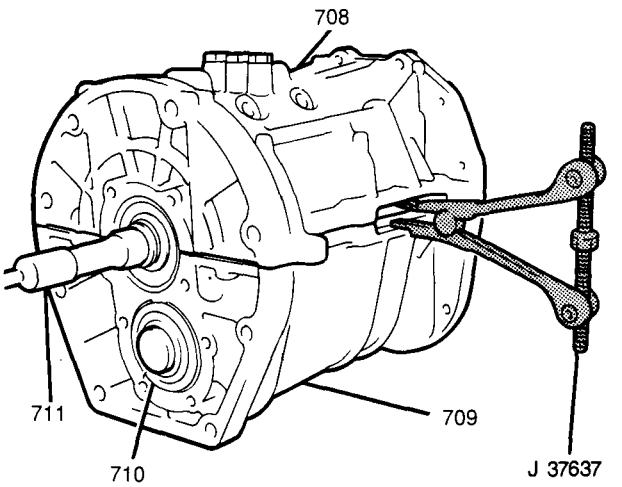

708 UPPER CASE 710 COUNTERSHAFT
709 LOWER CASE 711 INPUT SHAFT
NC7104-7B1-JT-RS

Figure 4 Separating Upper and Lower Cases

8. Main shaft and input shaft assembly from lower case.
9. Input shaft and input shaft needle bearing from main shaft.

Important

- The input shaft rides on a needle bearing between the input shaft and main shaft assembly. When separating the input shaft from the main shaft assembly, the needle bearing may remain either in the input shaft or on the main shaft assembly. Remove the input shaft needle bearing to prevent damage when servicing the input shaft and main shaft assembly.

Lower Case, Countershaft and Reverse Idler Gear

Figures 5 through 15

Remove or Disconnect

Tools Required:
J 34757 Circlip Remover
J 22888-20 Universal Puller
J 22888-30 Puller Legs

1. Rear countershaft bearing C-clip from countershaft using a J 34757 (Figure 5).

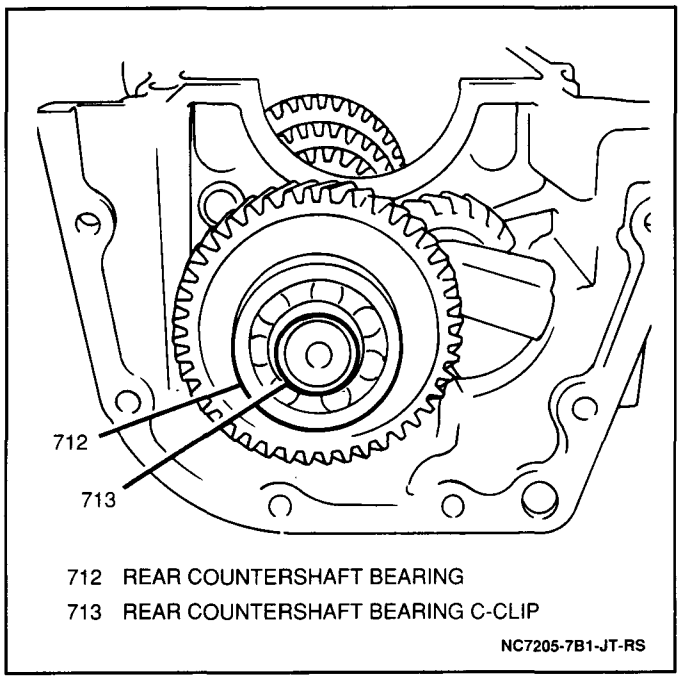

Figure 5 Rear Countershaft Bearing C-clip

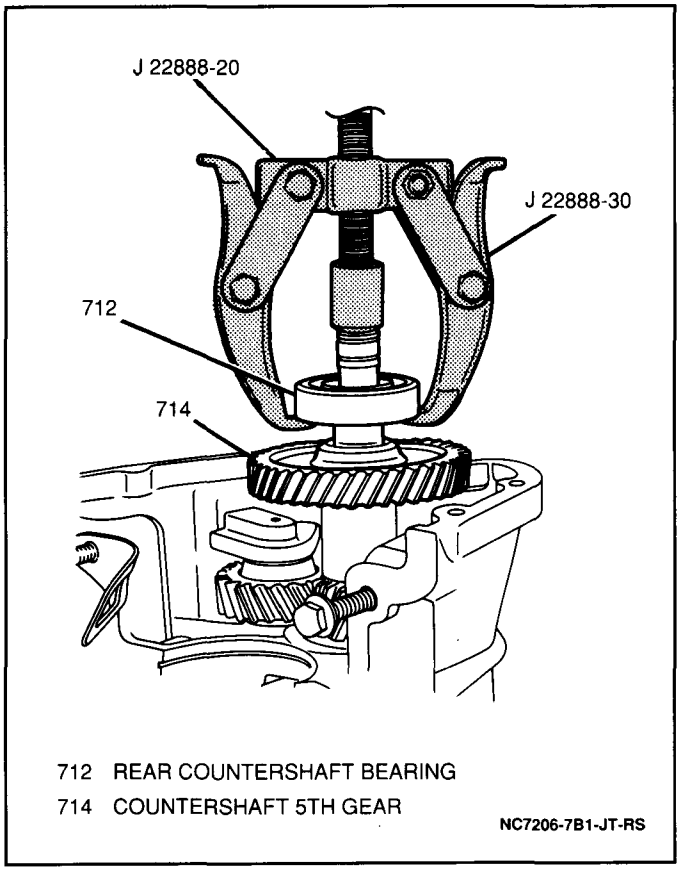

Figure 6 Removing Rear Countershaft Bearing

2. Rear countershaft bearing from countershaft using a J 22888-20 with the J 22888-30 (Figure 6).
3. Countershaft 5th gear and reverse gear from countershaft, one at a time by hand.
4. Reverse idler shaft bolt, reverse idler shaft and reverse idler gear from lower case (Figure 7).

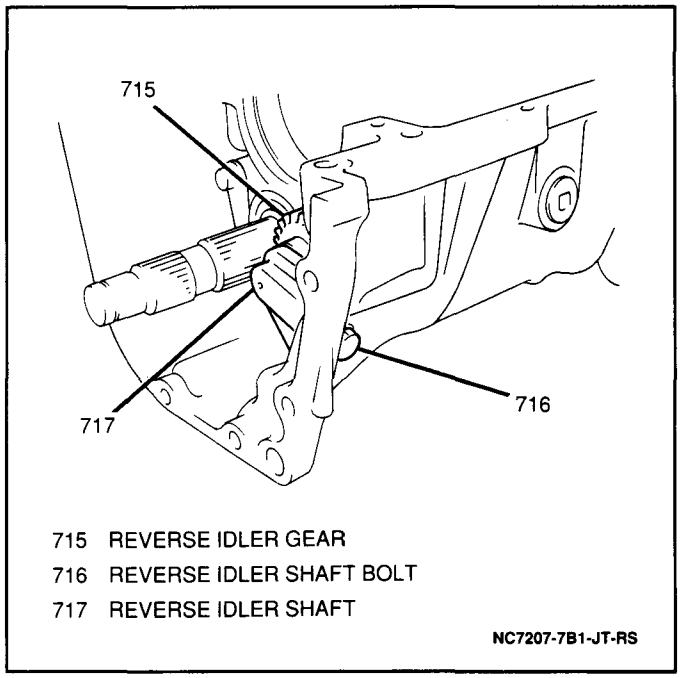

Figure 7 Reverse Idler Gear and Shaft

5. Reverse idler gear thrust washer, reverse idler gear needle bearing and reverse idler gear from reverse idler shaft.
6. Two bolts and countershaft center bearing plate from lower case (Figure 8).

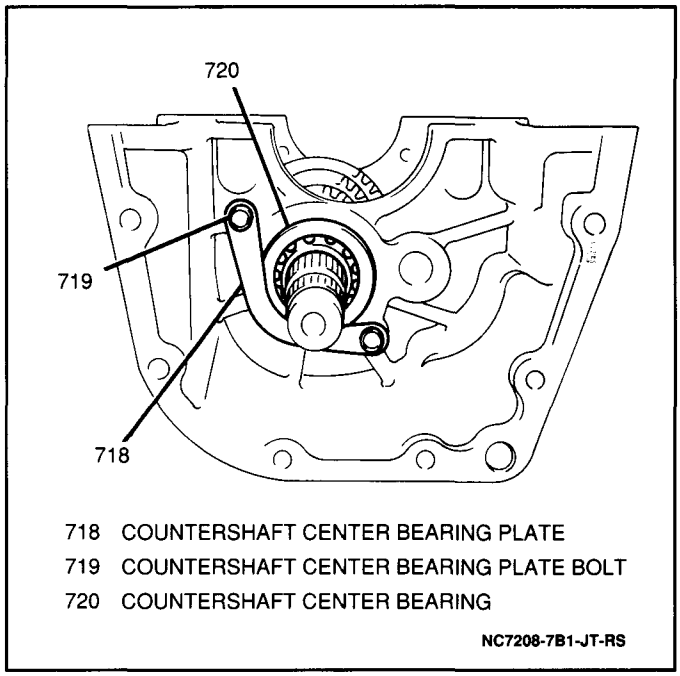

Figure 8 Countershaft Center Bearing Plate

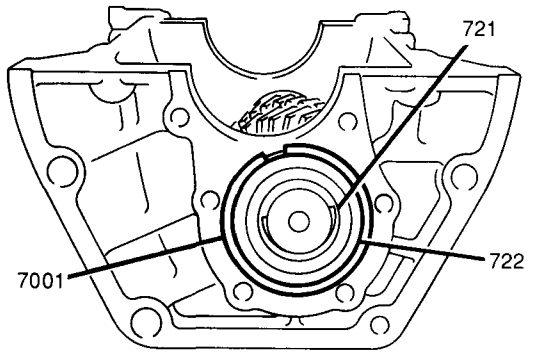

721 FRONT COUNTERSHAFT BEARING C-CLIP
722 FRONT COUNTERSHAFT BEARING
7001 FRONT COUNTERSHAFT BEARING C-RING
NC7209-7B1-JT-RS

Figure 9 Front Countershaft Bearing C-Ring

7. Front countershaft bearing C-ring from front countershaft bearing (Figure 9).

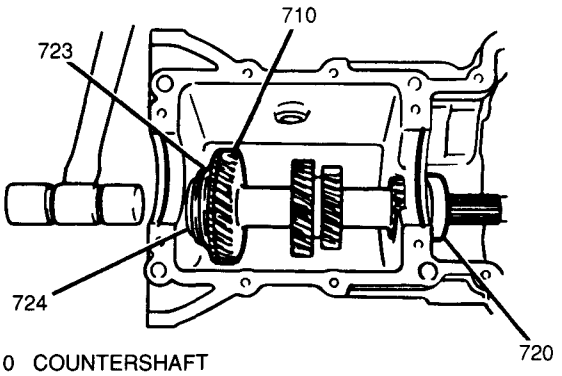

710 COUNTERSHAFT
720 COUNTERSHAFT CENTER BEARING
723 FRICTION GEAR
724 FRICTION GEAR RETAINER
NC7110-7B1-JT-RS

Figure 10 Removing Countershaft

- Lightly tap the countershaft rearward in the lower case and remove the countershaft center bearing by hand. Then, pull the countershaft forward and remove it from the lower case (Figure 10).

8. Front countershaft bearing C-clip from countershaft using the J 34757.

9. Front countershaft bearing from countershaft using the J 22888-20 with the J 22888-30 (Figure 11).

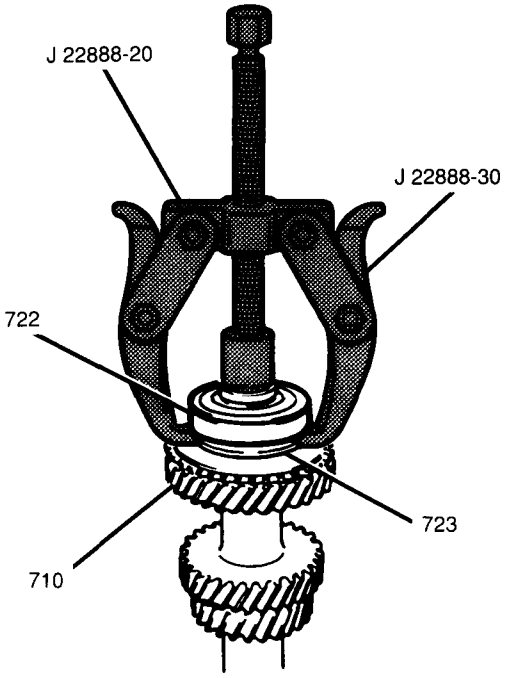

710 COUNTERSHAFT
722 FRONT COUNTERSHAFT BEARING
723 FRICTION GEAR
NC7211-7B1-JT-RS

Figure 11 Removing Front Countershaft Bearing

10. Friction gear snap ring, friction gear retainer, friction gear retainer pin, friction gear spring and friction gear from countershaft.

Clean

- Lower case mating surfaces and all countershaft components with solvent and dry thoroughly.

Inspect

- All gear tooth surfaces for excessive wear or damage and bearings for smooth rotation. Replace as necessary.

Install or Connect

Tools Required:
J 37754 Countershaft Bearing Installer
J 35664 Bearing Installer
J 35871 Countershaft Front Bearing Installer

1. Friction gear, friction gear spring, friction gear retainer pin, friction gear retainer and friction gear snap ring onto countershaft.
2. Front countershaft bearing onto countershaft using a J 35871 (Figure 12).

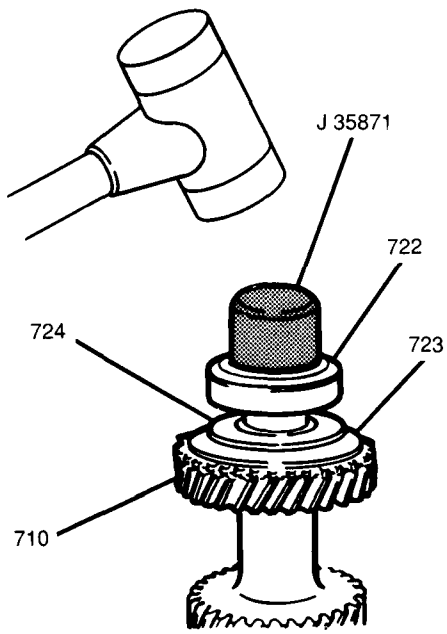

710 COUNTERSHAFT
722 FRONT COUNTERSHAFT BEARING
723 FRICTION GEAR
724 FRICTION GEAR RETAINER NC7212-7B1-JT-RS

Figure 12 Installing Front Countershaft Bearing

3. Front countershaft bearing C-clip onto countershaft.
4. Countershaft center bearing onto countershaft and countershaft into lower case by pressing countershaft and center bearing into lower case using a J 35664 with a J 37754 (Figure 13).

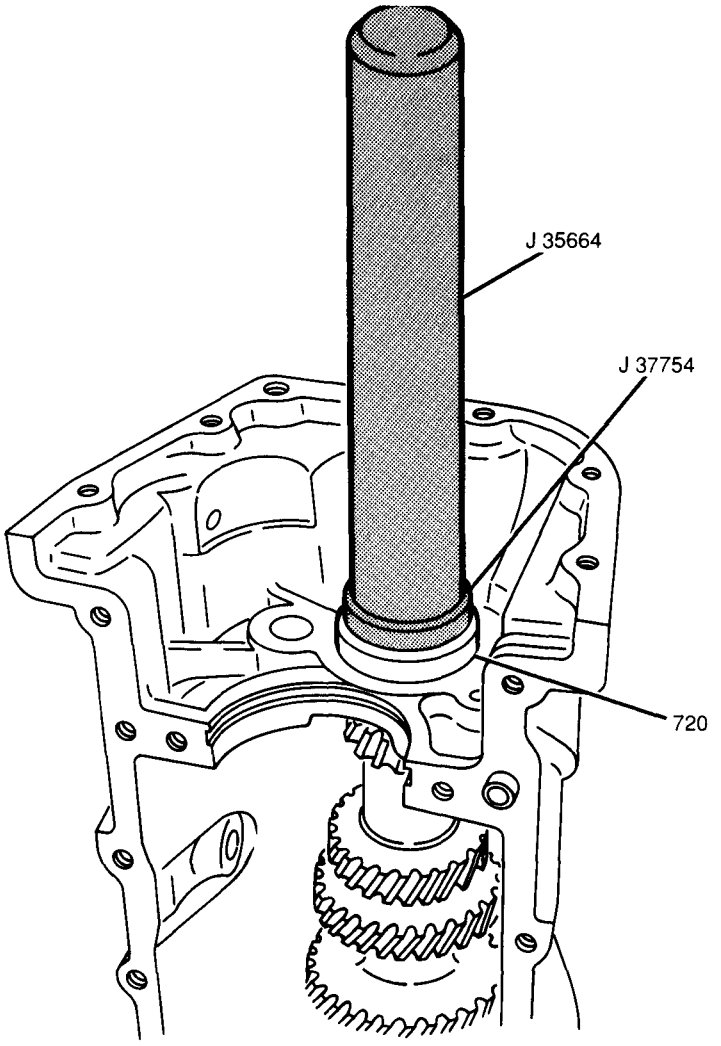

720 COUNTERSHAFT CENTER BEARING

NC7113-7B1-JT-RS

Figure 13 Installing Countershaft and Countershaft Center Bearing

5. Front countershaft bearing C-ring onto front countershaft bearing and position countershaft so that the front countershaft bearing C-ring makes light contact with the lower case (Figure 9).
- Apply Loctite® 414 GM P/N 12345093, or equivalent, to the threaded portion of the countershaft center bearing plate bolts.
6. Countershaft center bearing plate into lower case; secure with two bolts.

Tighten

- Countershaft center bearing plate bolts to 6 N·m (53 lb.in.).

7. Reverse idler gear, reverse idler gear needle bearing and reverse idler gear thrust washer onto reverse idler shaft.
- Apply Loctite® 414 GM P/N 12345093, or equivalent, to the threaded portion of the reverse idler shaft bolt.
8. Reverse idler gear with reverse idler shaft into lower case; secure with one washer and one bolt (Figure 14).

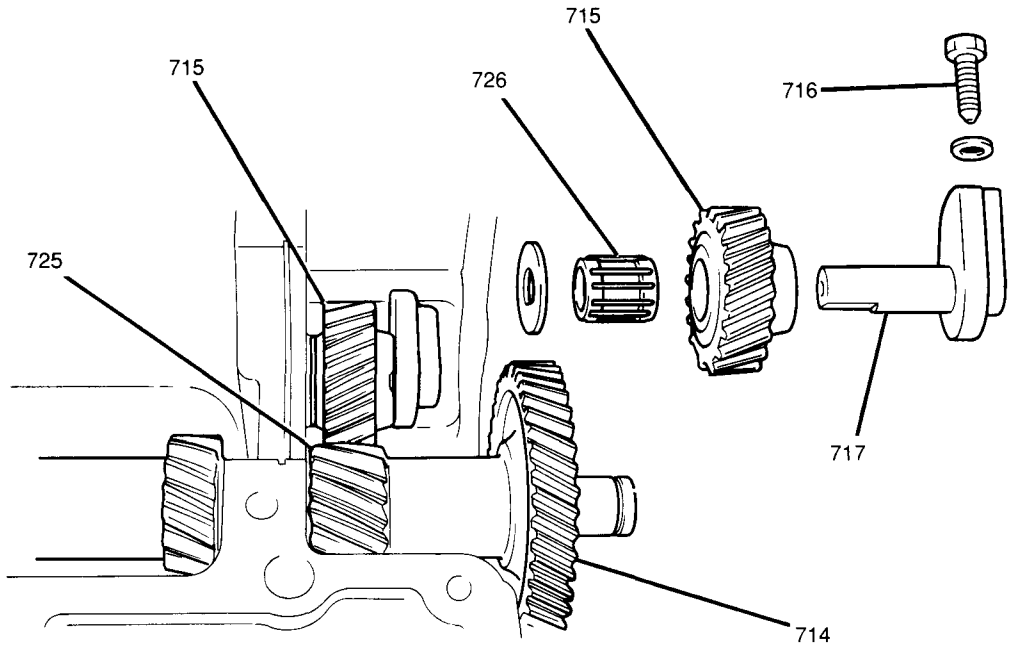

714 COUNTERSHAFT 5TH GEAR
715 REVERSE IDLER GEAR
716 REVERSE IDLER SHAFT BOLT
717 REVERSE IDLER SHAFT
725 COUNTERSHAFT REVERSE GEAR
726 REVERSE IDLER GEAR NEEDLE BEARING

NC7214-7B1-JT-RS

Figure 14 Reverse Idler Gear and Shaft Installation

Important

- An aluminum washer must be used on the reverse idler shaft bolt to seat the reverse idler shaft bolt head without causing damage to the lower case.

Tighten

- Reverse idler shaft bolt to 22 N·m (16 lb.ft.).

9. Countershaft reverse gear and countershaft 5th gear onto countershaft.
10. Rear countershaft bearing onto countershaft using the J 37754 with a J 35664 (Figure 15).

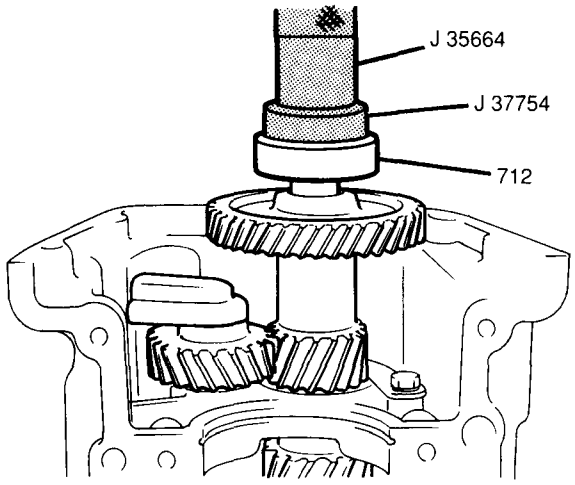

712 REAR COUNTERSHAFT BEARING NC7215-7B1-JT-RS

Figure 15 Installing Rear Countershaft Bearing

11. Rear countershaft bearing C-clip onto countershaft.

Input Shaft

Figures 16 through 20

Remove or Disconnect

Tools Required:
J 34757 Circlip Remover
J 22912-01 Split Plate
J 26941 Transmission Case Bearing Cup Remover
J 23907 Slide Hammer

1. Input shaft needle bearing from input shaft.
2. Front input shaft bearing C-clip from the input shaft using a J 34757.
3. Front input shaft bearing from input shaft using a J 22912-01 and a press arbor (Figure 16).

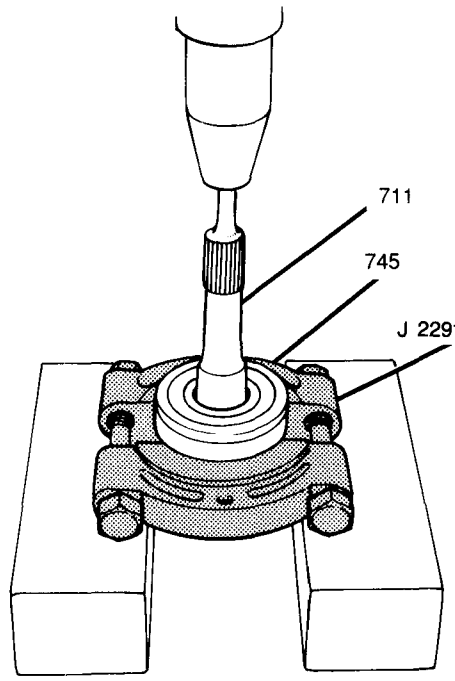

711 INPUT SHAFT
745 FRONT INPUT SHAFT BEARING NC7216-7B1-JT-RS

Figure 16 Removing Front Input Shaft Bearing

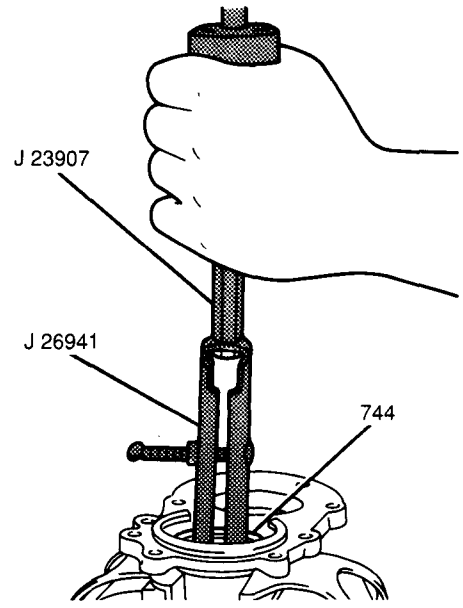

744 FRONT INPUT SHAFT OIL SEAL NC7217-7B1-JT-RS

Figure 17 Removing Front Input Shaft Oil Seal

4. Front input shaft oil seal from the input shaft bearing retainer using a J 26941 with a J 23907 (Figure 17).

Clean

1. Input shaft components with solvent and air dry.
2. Input shaft bearing retainer mating surface.

Inspect

1. Input shaft for scoring or excessive wear. Replace as necessary.
2. Input shaft bearing for roughness or wear. Replace as necessary.
3. Input shaft needle bearing for roughness or damage. Replace as necessary.

Install or Connect

Tools Required:
J 37209 Stub Shaft Seal Installer
J 37753 Bearing Installer
J 35664 Bearing Installer
J 36850 Transjel® Transmission Assembly Lubricant

- Apply J 36850 to the input shaft bearing retainer seal surface.

1. New front input shaft oil seal into the input shaft bearing retainer using a J 37209 and a hammer (Figure 18).

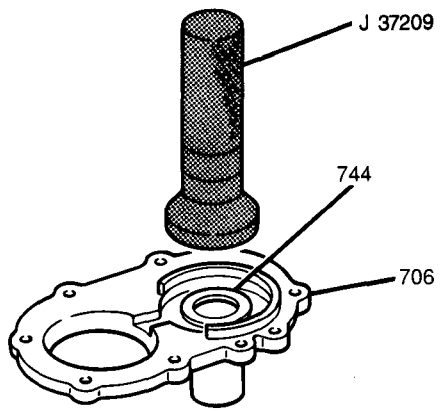

706 INPUT SHAFT BEARING RETAINER
744 FRONT INPUT SHAFT OIL SEAL NC7218-7B1-JT-RS

Figure 18 Installing Front Input Shaft Oil Seal

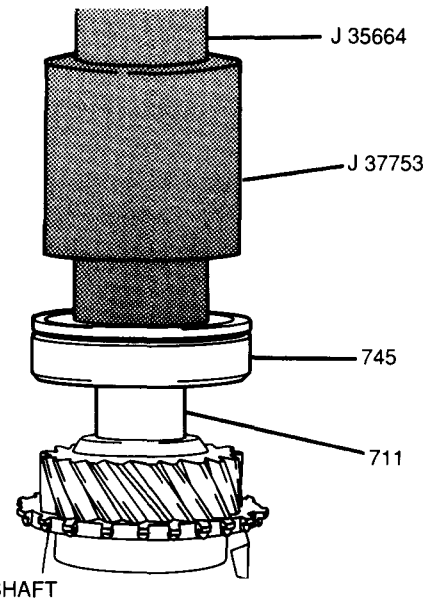

711 INPUT SHAFT
745 FRONT INPUT SHAFT BEARING NC7219-7B1-JT-RS

Figure 19 Installing Front Input Shaft Bearing

2. Front input shaft bearing onto input shaft using a J 37753 with a J 35664 and a press arbor (Figure 19).
3. Front input shaft bearing C-clip onto the input shaft.

- Apply J 36850 to the input shaft needle bearing.

4. Input shaft needle bearing into the input shaft (Figure 20).

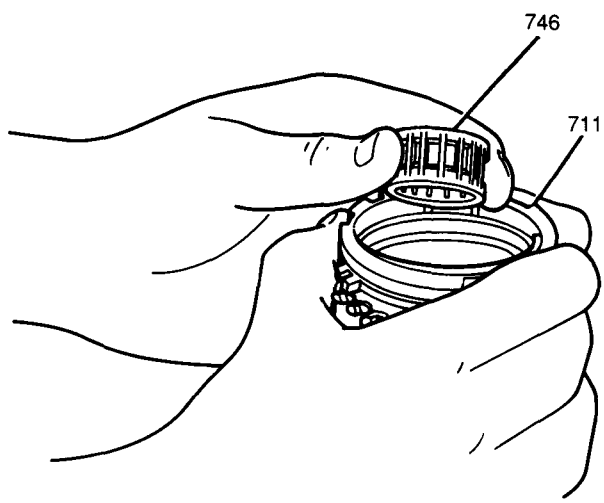

711 INPUT SHAFT
746 FRONT INPUT SHAFT NEEDLE BEARING
NC7220-7B1-JT-RS

Figure 20 Installing Input Shaft Needle Bearing

Main Shaft

Figures 21 through 43

Remove or Disconnect

Tools Required:
J 34757 Circlip Remover
J 22912-01 Split Plate

Important

- The main shaft 1st gear and reverse gear bushings are identical as are the main shaft 1st and 2nd gear needle bearings. Make note of these components and their positions during disassembly to ensure correct assembly and operation.

1. High speed and reverse hub C-clip from main shaft using a J 34757.
2. High speed synchronizer rings, high speed sleeve and hub assembly, main shaft 3rd gear and main shaft 3rd gear needle bearing from main shaft using a J 22912-01 and a press arbor (Figure 21).

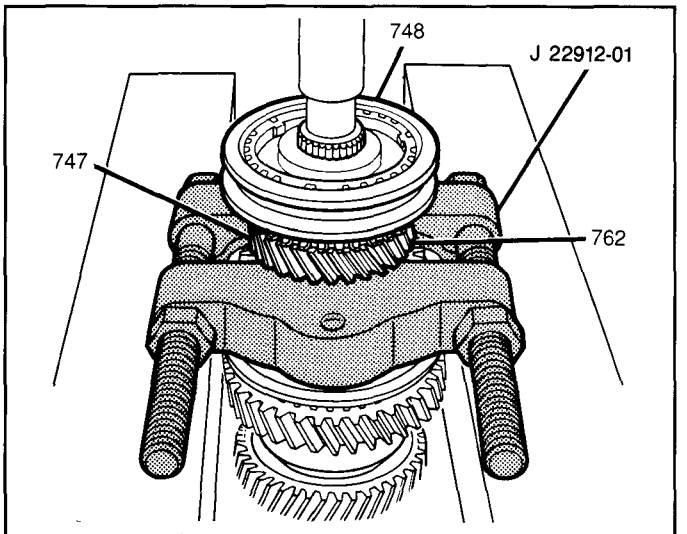

747 MAIN SHAFT 3RD GEAR
748 HIGH SPEED SLEEVE AND HUB ASSEMBLY
762 HIGH SPEED SYNCHRONIZER RING
NC7221-7B1-JT-RS

Figure 21 Removing Main Shaft 3rd Gear and High Speed Sleeve and Hub Assembly

3. High speed synchronizer sleeve from high speed synchronizer hub.
4. High speed synchronizer springs and three synchronizer keys from high speed synchronizer hub.
5. Two retaining rings and speedometer drive gear from main shaft using the J 34757.

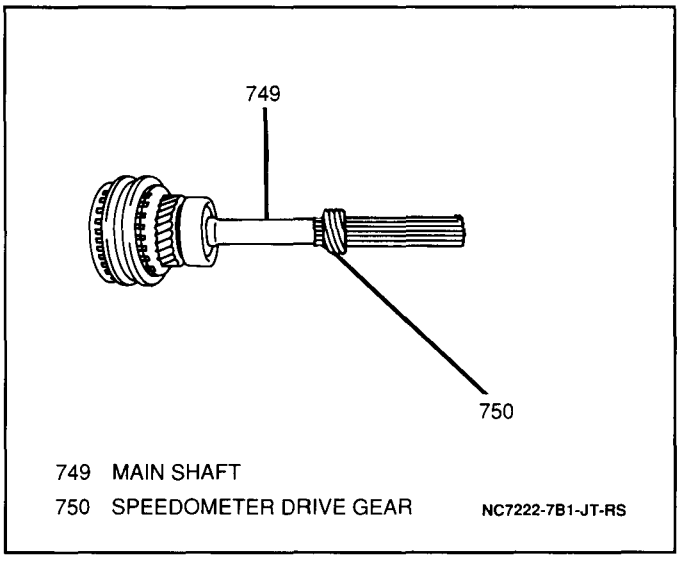

749 MAIN SHAFT
750 SPEEDOMETER DRIVE GEAR
NC7222-7B1-JT-RS

Figure 22 Removing Speedometer Drive Gear

6. Main shaft rear bearing C-clip from main shaft using the J 34757.
7. Main shaft rear bearing from main shaft using the J 22912-01 and a press arbor (Figure 23).

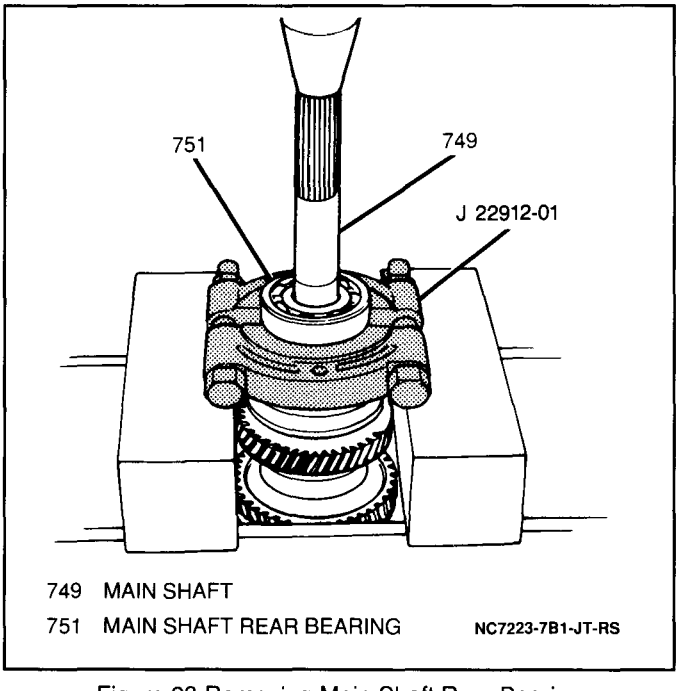

749 MAIN SHAFT
751 MAIN SHAFT REAR BEARING
NC7223-7B1-JT-RS

Figure 23 Removing Main Shaft Rear Bearing

Important

- The main shaft 5th gear and reverse gear needle bearings separate into two halves each. Make note of these components and their locations to ensure correct assembly and operation.

8. Main shaft 5th gear washer, main shaft washer ball, main shaft 5th gear, high speed synchronizer ring and main shaft 5th gear needle bearing from main shaft.
9. Reverse synchronizer sleeve from reverse synchronizer hub.
10. Reverse synchronizer springs and three synchronizer keys from reverse synchronizer hub.
11. High speed and reverse hub C-clip from main shaft using the J 34757.

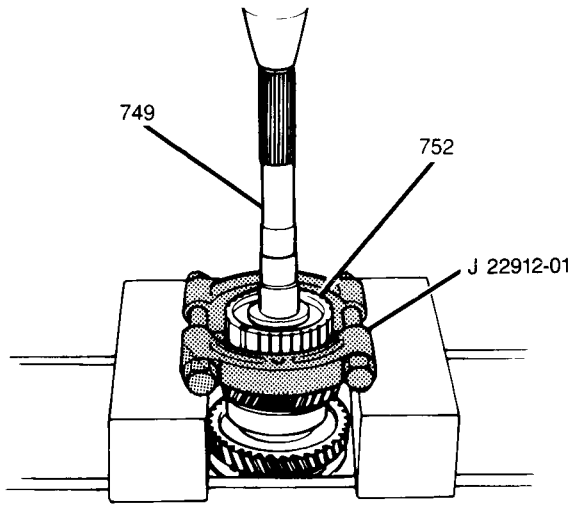

749 MAIN SHAFT
752 REVERSE SYNCHRONIZER HUB NC7224-7B1-JT-RS

Figure 24 Removing Reverse Synchronizer Hub

12. Reverse synchronizer hub from main shaft using the J 22912-01 and a press arbor (Figure 24).
13. Main shaft reverse gear and needle bearing from main shaft.

    NOTICE: DO NOT remove the main shaft bearing washer, main shaft reverse gear bushing and the main shaft center bearing in one step. The main shaft washer ball which locks the main shaft bearing washer in place could damage the main shaft or the main shaft center bearing. Remove the main shaft reverse gear bushing first, then, remove the main shaft bearing washer and main shaft washer ball before removing the bushing main shaft center bearing from the main shaft.

14. Main shaft reverse gear bushing, main shaft bearing washer and main shaft washer ball from the main shaft.
15. Main shaft center bearing from main shaft using the J 22912-01 and a press arbor.

    NOTICE: DO NOT remove the main shaft bearing washer, main shaft 1st gear, main shaft 1st gear needle bearing and low speed synchronizer ring in one step. The main shaft washer ball which locks the main shaft bearing washer in place could damage the main shaft or the main shaft 1st gear. Remove the main shaft bearing washer and main shaft washer first, then, remove the main shaft 1st gear, main shaft 1st gear needle bearing and low speed synchronizer ring.

16. Main shaft bearing washer and main shaft washer ball from main shaft.
17. Main shaft 1st gear, main shaft 1st gear needle bearing and low speed synchronizer ring from main shaft.
18. Main shaft 1st gear bushing, low speed sleeve and hub assembly, low speed synchronizer ring and main shaft 2nd gear from main shaft using the J 22912-01 and a press arbor (Figure 25).

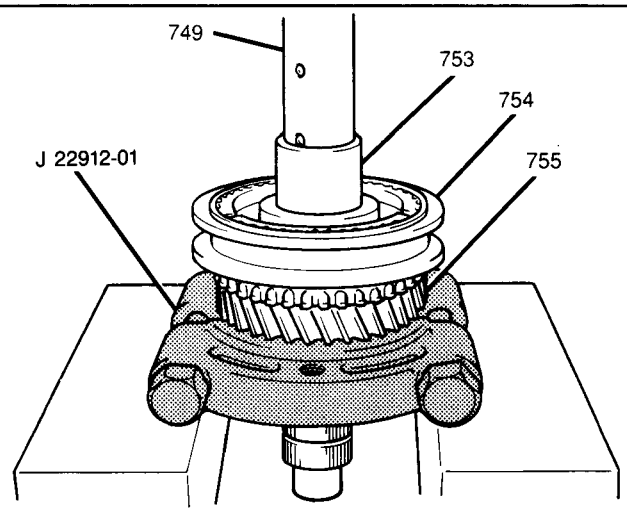

749 MAIN SHAFT
753 MAIN SHAFT 1ST GEAR BUSHING
754 LOW SPEED SLEEVE AND HUB ASSEMBLY
755 MAIN SHAFT 2ND GEAR NC7225-7B1-JT-RS

Figure 25 Removing Low Speed Sleeve and Hub Assembly

19. Main shaft 2nd gear needle bearing from main shaft.
20. Low speed synchronizer sleeve from low speed synchronizer hub.

21. Low speed synchronizer springs and synchronizer keys from low speed synchronizer hub.

Clean

- All main shaft components thoroughly with solvent and air dry.

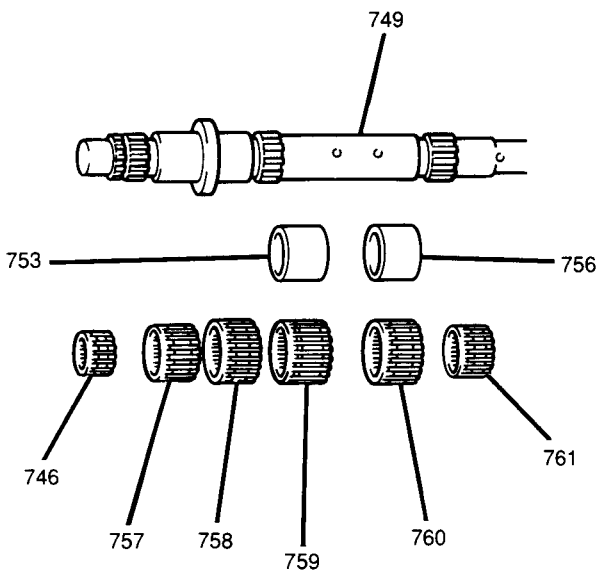

746 FRONT INPUT SHAFT NEEDLE BEARING
749 MAIN SHAFT
753 MAIN SHAFT 1ST GEAR BUSHING
756 MAIN SHAFT REVERSE GEAR BUSHING
757 MAIN SHAFT 3RD GEAR NEEDLE BEARING
758 MAIN SHAFT 2ND GEAR NEEDLE BEARING
759 MAIN SHAFT 1ST GEAR NEEDLE BEARING
760 MAIN SHAFT REVERSE GEAR NEEDLE BEARING
761 MAIN SHAFT 5TH GEAR NEEDLE BEARING

NC7226-7B1-JT-RS

Figure 26 Inspecting Main Shaft, Needle Bearings and Bushings

Inspect

1. All needle bearings for unusual wear or damage. Replace as necessary (Figure 26).
2. All ball bearings for roughness or wear. Replace as necessary.
3. Chamfered portion of each synchronizer ring for excessive wear. Replace as necessary.
4. All synchronizer springs and keys for distortion or damage. Replace as necessary.
5. Main shaft for grooves, scoring or unusual wear. Replace as necessary (Figure 26).

Measure

Tool Required:
J 26900-7 Dial Caliper

1. Clearance between each synchronizer ring and its respective gear using a feeler gage. Maximum synchronizer ring clearance is 1.0 to 1.4 mm (0.039 to 0.055-inch). If synchronizer ring clearance exceeds specification, replace the synchronizer ring and gear (Figure 27).

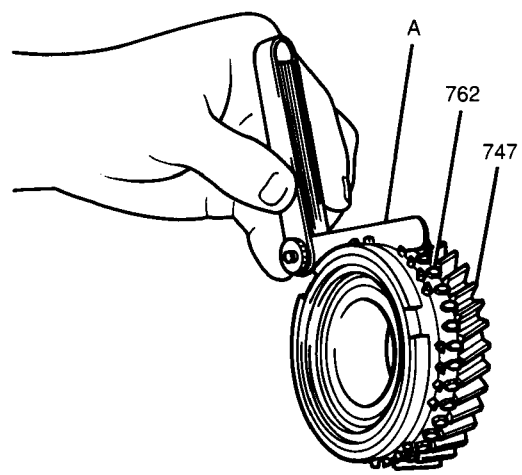

A FEELER GAGE
762 HIGH SPEED SYNCHRONIZER RING
747 MAIN SHAFT 3RD GEAR

NC7227-7B1-JT-RS

Figure 27 Measuring Synchronizer Ring Clearance

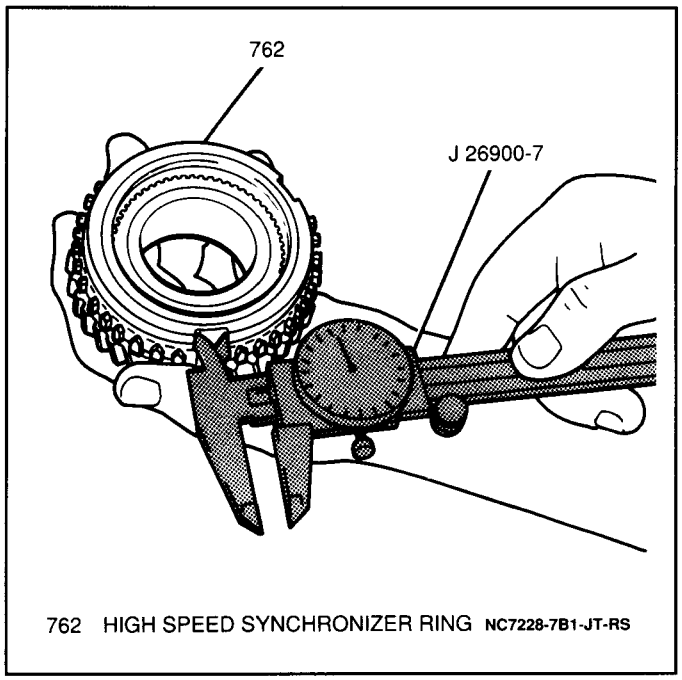

Figure 28 Measuring Synchronizer Key Slot Width

2. Key slot width of each synchronizer ring using a J 26900-7. Maximum synchronizer key slot width is 10.1 to 10.4 mm (0.397 to 0.409-inch). If synchronizer ring key slot width exceeds specification, replace the synchronizer ring (Figure 28).

3. Clearance between each gearshift fork and its respective synchronizer sleeve using a feeler gage. Maximum gearshift fork clearance is 1.0 mm (0.039-inch). If gearshift fork clearance exceeds specification, replace the gearshift fork and synchronizer sleeve (Figure 29).

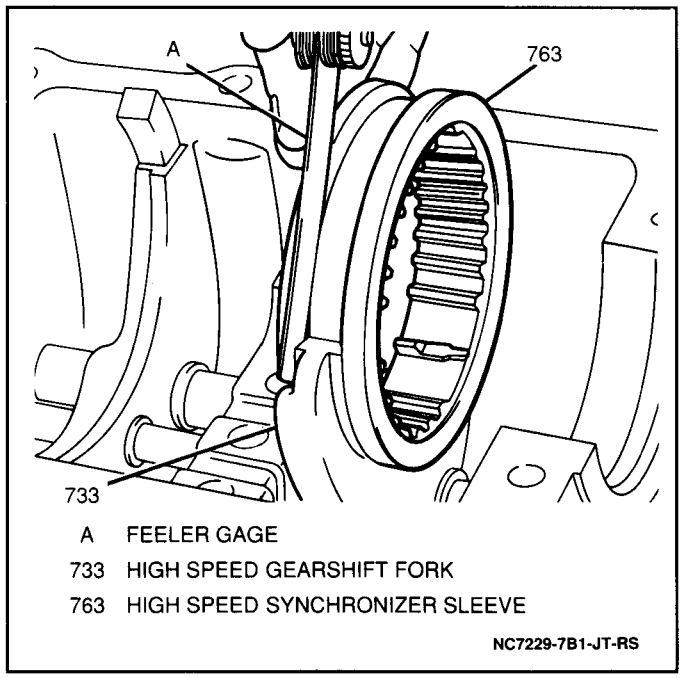

Figure 29 Measuring Gearshift Fork-to-Synchronizer Sleeve Clearance

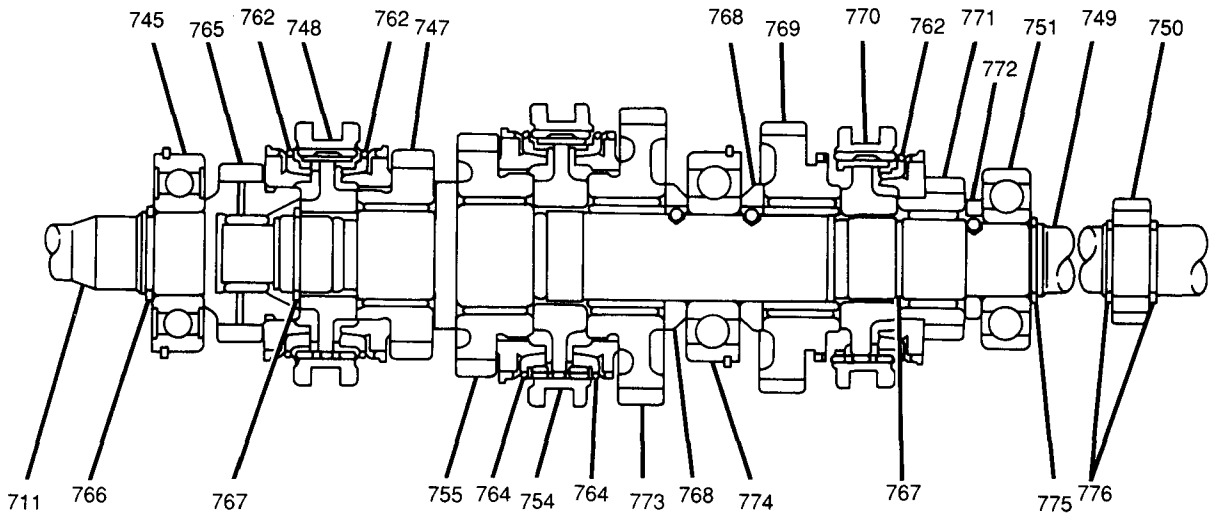

711 INPUT SHAFT
745 FRONT INPUT SHAFT BEARING
747 MAIN SHAFT 3RD GEAR
748 HIGH SPEED SLEEVE AND HUB ASSEMBLY
749 MAIN SHAFT
750 SPEEDOMETER DRIVE GEAR
751 MAIN SHAFT REAR BEARING
754 LOW SPEED SLEEVE AND HUB ASSEMBLY
755 MAIN SHAFT 2ND GEAR
762 HIGH SPEED SYNCHRONIZER RING
764 LOW SPEED SYNCHRONIZER RING
765 INPUT SHAFT 4TH GEAR
766 FRONT INPUT SHAFT BEARING C-CLIP
767 HIGH SPEED AND REVERSE HUB C-CLIP
768 MAIN SHAFT BEARING WASHER
769 MAIN SHAFT REVERSE GEAR
770 REVERSE SLEEVE AND HUB ASSEMBLY
771 MAIN SHAFT 5TH GEAR
772 MAIN SHAFT 5TH GEAR WASHER
773 MAIN SHAFT 1ST GEAR
774 MAIN SHAFT CENTER BEARING
775 MAIN SHAFT REAR BEARING C-CLIP
776 SPEEDOMETER DRIVE GEAR RETAINING RING

NC7230-7B1-JT-RS

Figure 30 Main Shaft Assembly

Install or Connect

Tools Required:
- J 37753 Bearing Installer
- J 35664 Bearing Installer
- J 28406 Bearing Installer
- J 22912-01 Split Plate
- J 35425 High Speed Hub Installer
- J 36850 Transjel® Transmission Assembly Lubricant

1. Low speed synchronizer springs and synchronizer keys onto low speed synchronizer hub (Figure 31).

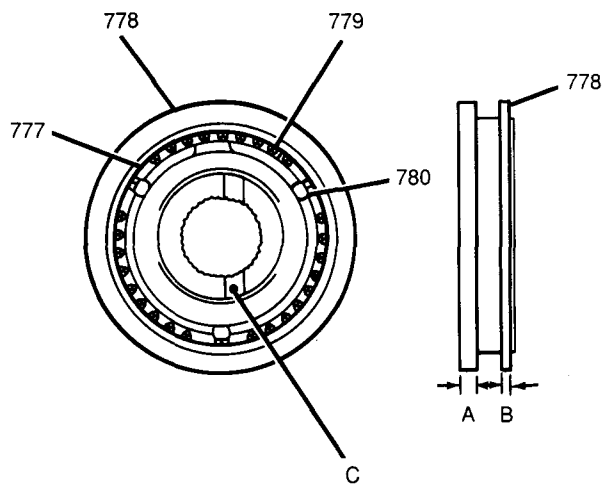

A THICK SIDE (TOWARD 2ND GEAR)
B THIN SIDE (TOWARD 1ST GEAR)
C PUNCH MARK (TOWARD 1ST GEAR)
777 LOW SPEED SYNCHRONIZER HUB
778 LOW SPEED SYNCHRONIZER SLEEVE
779 LOW SPEED SYNCHRONIZER SPRING
780 SYNCHRONIZER KEY

NC7231-7B1-JT-RS

Figure 31 Low Speed Sleeve and Hub Assembly

2. Low speed synchronizer sleeve onto low speed synchronizer hub (Figure 31).
- Apply J 36850 to the main shaft 2nd gear needle bearing.
3. Main shaft 2nd gear needle bearing, main shaft 2nd gear and low speed synchronizer ring onto main shaft (Figure 32).

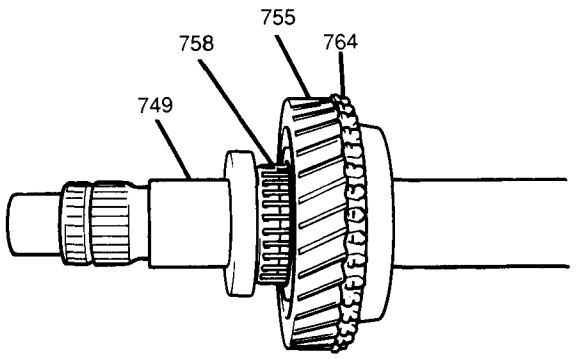

749 MAIN SHAFT
755 MAIN SHAFT 2ND GEAR
758 MAIN SHAFT 2ND GEAR NEEDLE BEARING
764 LOW SPEED SYNCHRONIZER RING

NC7232-7B1-JT-RS

Figure 32 Installing Main Shaft 2nd Gear

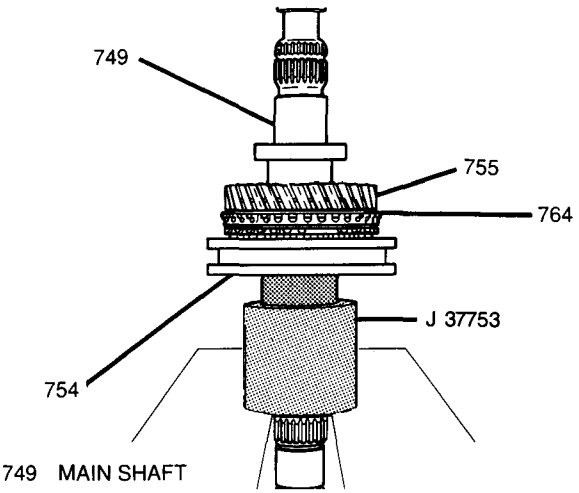

749 MAIN SHAFT
754 LOW SPEED SLEEVE AND HUB ASSEMBLY
755 MAIN SHAFT 2ND GEAR
764 LOW SPEED SYNCHRONIZER RING

NC7233-7B1-JT-RS

Figure 33 Installing Low Speed Sleeve and Hub Assembly

4. Low speed sleeve and hub assembly onto main shaft using a J 37753 and a press arbor (Figure 33).

5. Main shaft 1st gear bushing onto main shaft using the J 37753 and a press arbor (Figure 34).

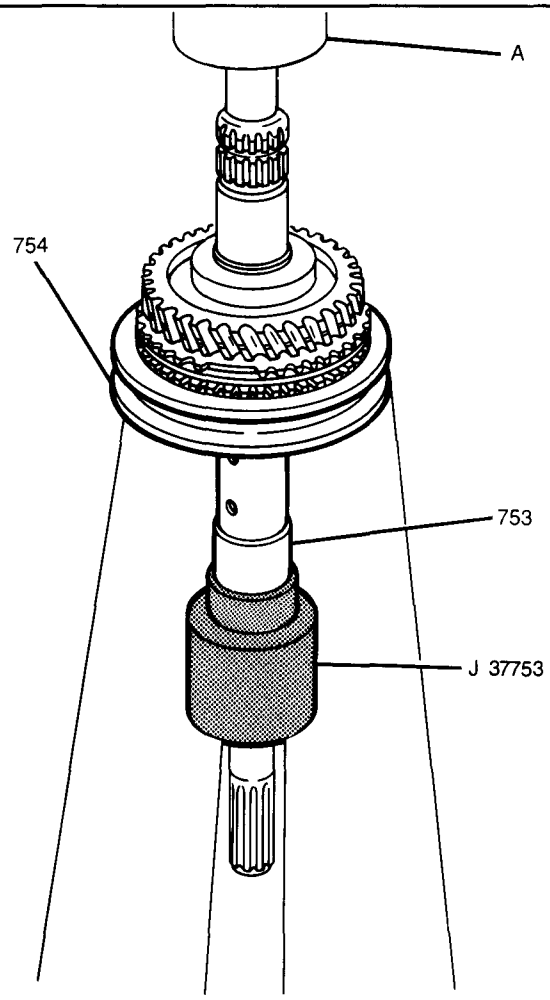

A PRESS ARBOR
753 MAIN SHAFT 1ST GEAR BUSHING
754 LOW SPEED SLEEVE AND HUB ASSEMBLY
NC7234-7B1-JT-RS

Figure 34 Installing Main Shaft 1st Gear Bushing

- Apply J 36850 to the main shaft 1st gear needle bearing.

6. Main shaft 1st gear needle bearing, low speed synchronizer ring and main shaft 1st gear onto main shaft.
7. Main shaft washer ball and main shaft bearing washer onto main shaft (Figure 35).

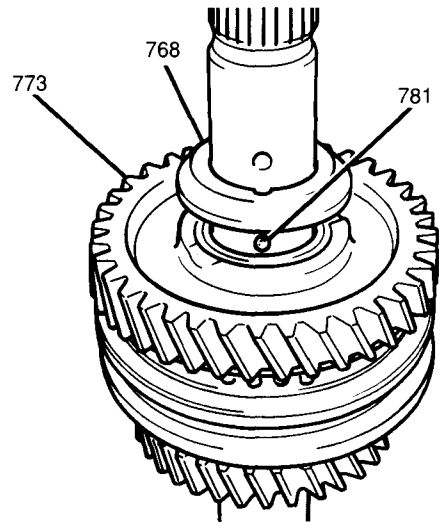

768 MAIN SHAFT BEARING WASHER
773 MAIN SHAFT 1ST GEAR
781 MAIN SHAFT WASHER BALL
NC7235-7B1-JT-RS

Figure 35 Installing Main Shaft Bearing Washer

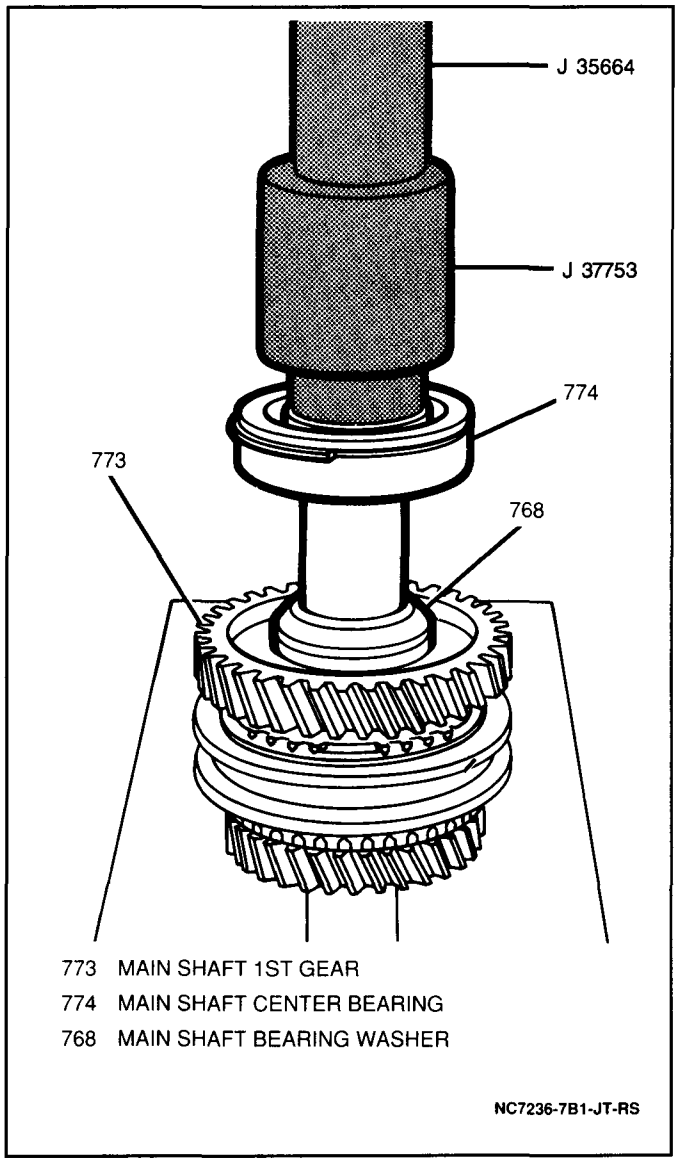

Figure 36 Installing Main Shaft Center Bearing

8. Main shaft center bearing onto main shaft using the J 37753 with a J 35664 and a press arbor (Figure 36).

9. Reverse synchronizer springs and three synchronizer keys to reverse synchronizer hub. The thick side of the synchronizer keys and synchronizer sleeve should face toward the main shaft 5th gear (Figure 37).

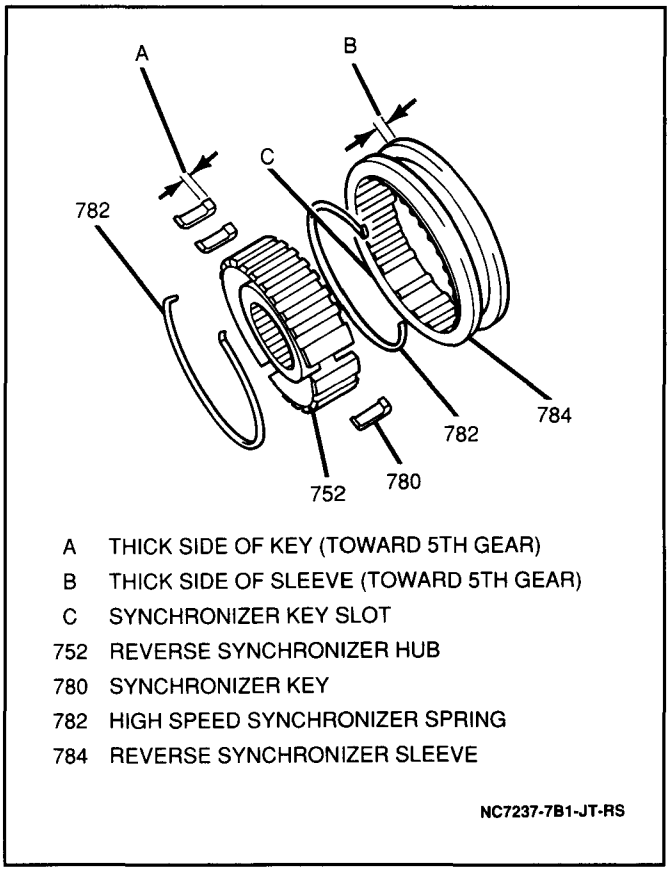

Figure 37 Reverse Sleeve and Hub Assembly

10. Reverse synchronizer sleeve to reverse synchronizer hub (Figure 37).
11. Main shaft washer ball and main shaft bearing washer to main shaft.

12. Main shaft reverse gear bushing onto main shaft using the J 37753 with the J 35664 and gently tapping (Figure 38).

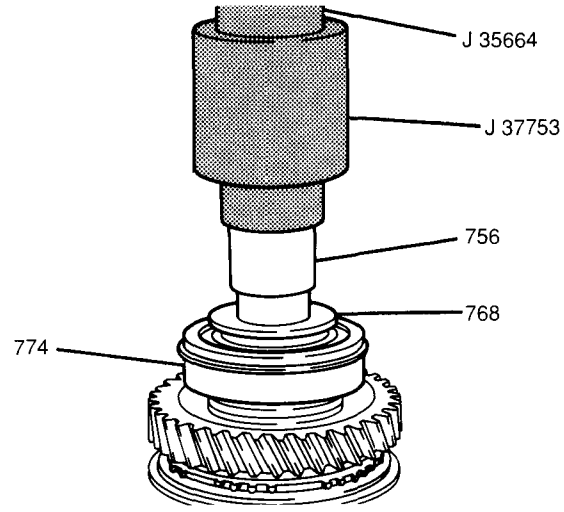

756 MAIN SHAFT REVERSE GEAR BUSHING
768 MAIN SHAFT BEARING WASHER
774 MAIN SHAFT CENTER BEARING
NC7238-7B1-JT-RS

Figure 38 Installing Main Shaft Reverse Gear Bushing

- Apply J 36850 to both halves of the main shaft reverse gear needle bearing.

13. Main shaft reverse gear needle bearing and main shaft reverse gear onto main shaft.
14. Reverse sleeve and hub assembly onto main shaft using the J 37753 with the J 35664 and gently tapping into place (Figure 39).

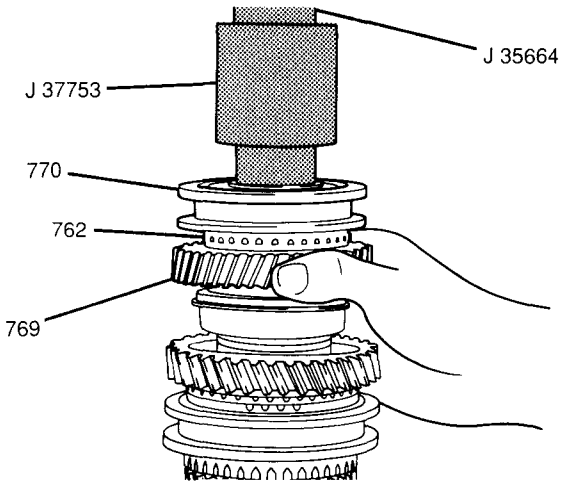

762 HIGH SPEED SYNCHRONIZER RING
769 MAIN SHAFT REVERSE GEAR
770 REVERSE SLEEVE AND HUB ASSEMBLY
NC7239-7B1-JT-RS

Figure 39 Installing Reverse Sleeve and Hub Assembly

15. High speed and reverse hub C-clip onto main shaft.
- Apply J 36850 to both halves of the main shaft 5th gear needle bearing.

16. High speed synchronizer ring, main shaft 5th gear needle bearing, main shaft 5th gear, main shaft washer ball and main shaft 5th gear washer onto main shaft with oil slot in the main shaft 5th gear washer facing the main shaft 5th gear.
17. Main shaft rear bearing onto main shaft using a J 22912-01 for support, a J 28406 and a press arbor (Figure 40).

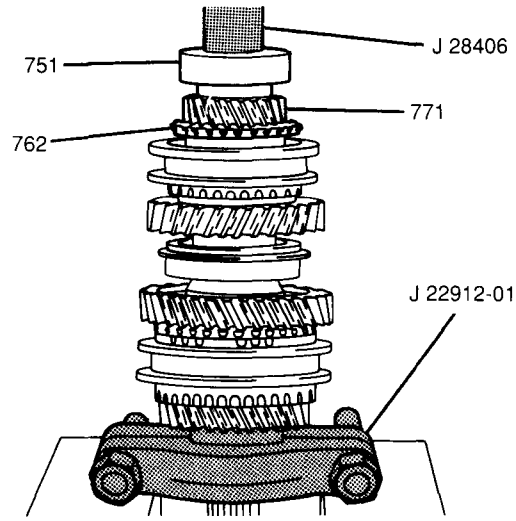

751 MAIN SHAFT REAR BEARING
762 HIGH SPEED SYNCHRONIZER RING
771 MAIN SHAFT 5TH GEAR
NC7240-7B1-JT-RS

Figure 40 Installing Main Shaft Rear Bearing

18. Main shaft rear bearing C-clip onto main shaft.
19. Speedometer drive gear onto main shaft; secure with speedometer drive gear retaining rings (Figure 41).

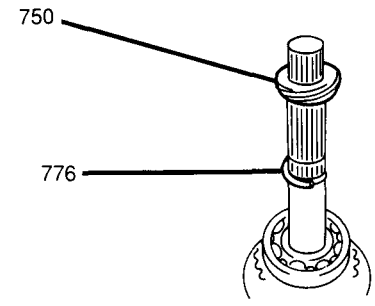

750 SPEEDOMETER DRIVE GEAR
776 SPEEDOMETER DRIVE GEAR RETAINING RING
NC7241-7B1-JT-RS

Figure 41 Installing Speedometer Drive Gear

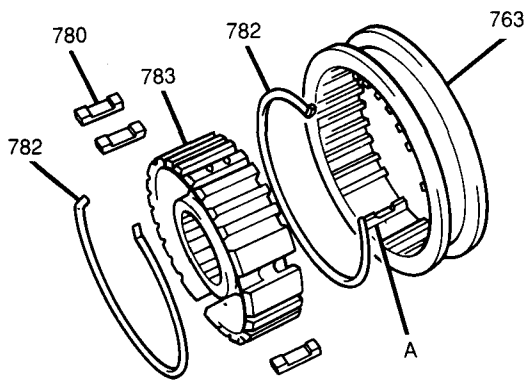

A SYNCHRONIZER KEY SLOT
763 HIGH SPEED SYNCHRONIZER SLEEVE
780 SYNCHRONIZER KEY
782 HIGH SPEED SYNCHRONIZER SPRING
783 HIGH SPEED SYNCHRONIZER HUB

NC7242-7B1-JT-RS

Figure 42 Assembling High Speed Sleeve and Hub

20. High speed synchronizer springs and three synchronizer keys onto high speed synchronizer hub (Figure 42).
21. High speed synchronizer sleeve onto high speed synchronizer hub.
- Apply J 36850 to the main shaft 3rd gear needle bearing.
22. Main shaft 3rd gear needle bearing, main shaft 3rd gear, high speed synchronizer rings and high speed sleeve and hub assembly onto main shaft using the J 22912-01 for support, a J 35425 and a press arbor (Figure 43).

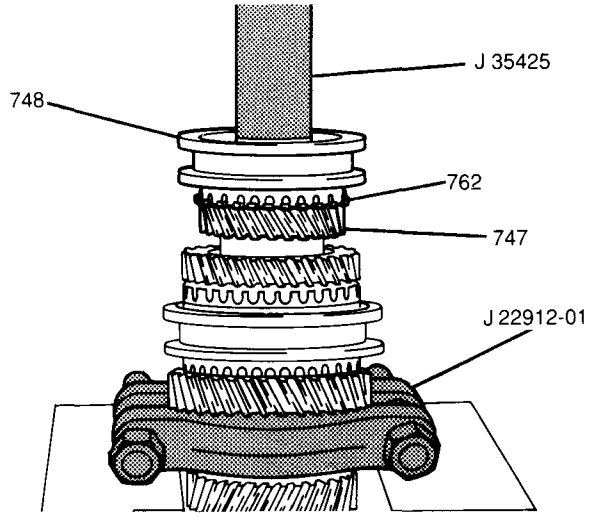

747 MAIN SHAFT 3RD GEAR
748 HIGH SPEED SLEEVE AND HUB ASSEMBLY
762 HIGH SPEED SYNCHRONIZER RING

NC7243-7B1-JT-RS

Figure 43 Installing High Speed Sleeve and Hub Assembly

23. High speed and reverse hub C-clip onto main shaft.

Upper Case, Gearshift Shafts and Gearshift Forks

Figures 29 and 44 through 55

Remove or Disconnect

1. Backup lamp switch from upper case (Figure 44).

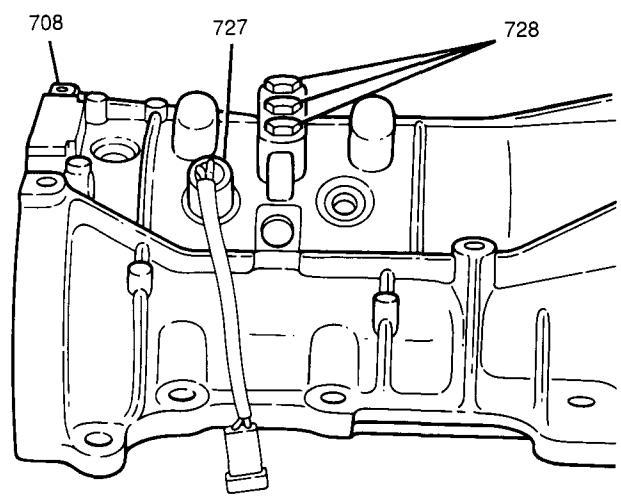

708 UPPER CASE
727 BACKUP LAMP SWITCH
728 LOCATING SPRING BOLTS

NC7244-7B1-JT-RS

Figure 44 Backup Lamp Switch

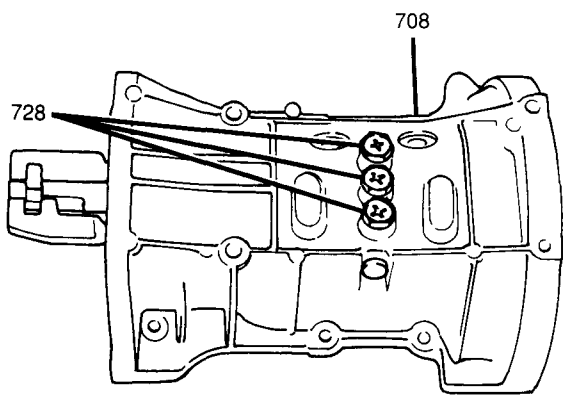

708 UPPER CASE
728 LOCATING SPRING BOLTS NC7245-7B1-JT-RS

Figure 45 Locating Spring Bolts

2. Three locating spring bolts, three set washers, three locating springs and three locating balls from upper case (Figure 45).

Important

- When removing any gearshift shaft, the interlock system will prevent gearshift shaft removal unless the other two gearshift shafts are in the neutral position.

- Place all three gearshift shafts in the neutral position.

3. Low speed gearshift fork roll pin, low speed gearshift fork and low speed gearshift shaft from upper case (Figure 46).

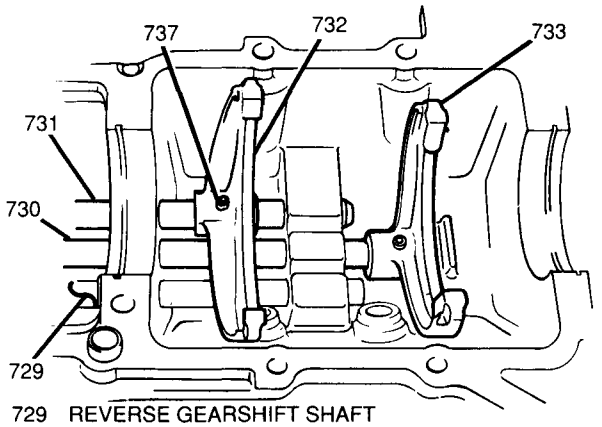

729 REVERSE GEARSHIFT SHAFT
730 HIGH SPEED GEARSHIFT SHAFT
731 LOW SPEED GEARSHIFT SHAFT
732 LOW SPEED GEARSHIFT FORK
733 HIGH SPEED GEARSHIFT FORK
737 LOW SPEED GEARSHIFT FORK ROLL PIN
NC7246-7B1-JT-RS

Figure 46 Removing Gearshift Shafts

4. High speed gearshift fork roll pin, high speed gearshift fork and high speed gearshift shaft from upper case (Figure 47).
5. Reverse gearshift shaft from upper case (Figure 47).
6. Reverse gearshift fork roll pin and reverse gearshift fork from reverse gearshift shaft.
7. Two rubber plugs and two interlock balls from upper case.
8. Interlock pin from high speed gearshift shaft.

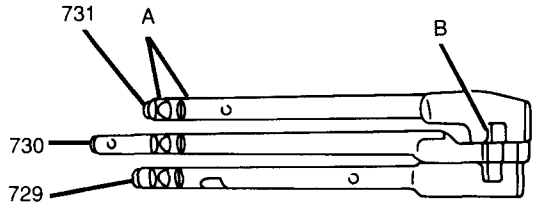

A LOCATING GROOVE
B GEARSHIFT LEVER GROOVE
729 REVERSE GEARSHIFT SHAFT
730 HIGH SPEED GEARSHIFT SHAFT
731 LOW SPEED GEARSHIFT SHAFT
NC7247-7B1-JT-RS

Figure 47 Inspecting Gearshift Shafts

Inspect

- Gearshift shafts for wear. Pay particular attention to the locating and gearshift lever grooves in the gearshift shafts (Figure 47). Replace any gearshift shaft that exhibits excessive wear or damage. Insert each gearshift shaft into upper case and check for smooth operation while working back and forth. If any gearshift shaft binds, correct by carefully sanding contact surfaces with emery cloth.

Measure

Tool Required:
J 26900-7 Dial Caliper

1. Clearance fork-to-sleeve clearance using a feeler gage (Figure 29). If clearance exceeds 1.0 mm (0.039-inch), replace the fork and synchronizer sleeve as necessary.
2. Locating spring length using a J 26900-7 (Figure 48). Standard locating spring length is 24.0 to 27.0 mm (0.945 to 1.063-inch). If a spring is less than 24.0 mm (0.945-inch), replace it.

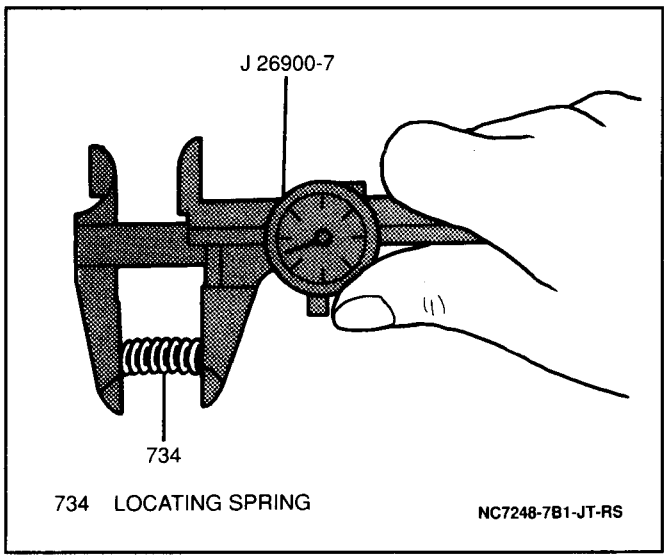

Figure 48 Measuring Locating Spring Length

Install or Connect

Important

- The reverse gearshift fork roll pin is 5 mm (0.187-inch) longer than the low speed and high speed gearshift fork roll pins (Figure 49). The clearance between the low speed and high speed gearshift forks and the upper case is not sufficient for the removal of a roll pin longer than 25 mm (0.98-inch). If the reverse gear shift fork roll pin is installed in the low speed or high speed gearshift fork, the reverse gearshift fork roll pin will contact the upper case during any future disassembly. This may inhibit transmission operation as well as making any gearshift fork removal impossible.

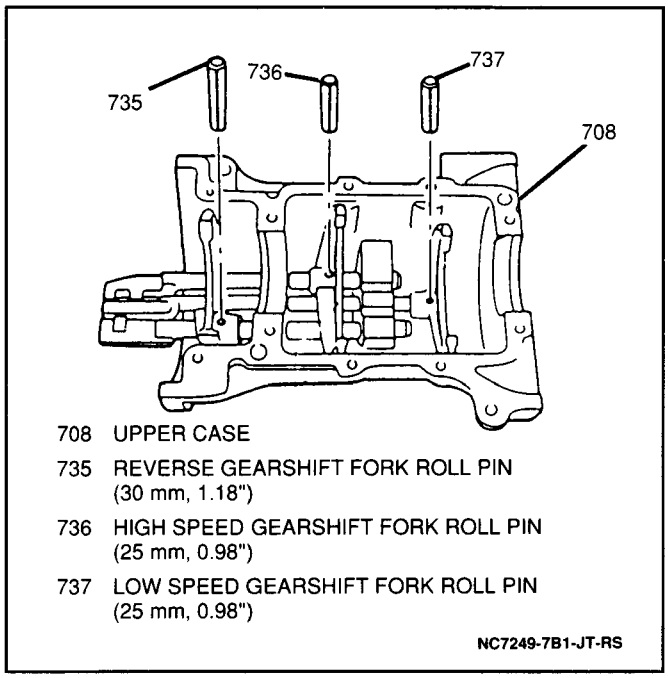

Figure 49 Gearshift Fork Roll Pin Size and Installation

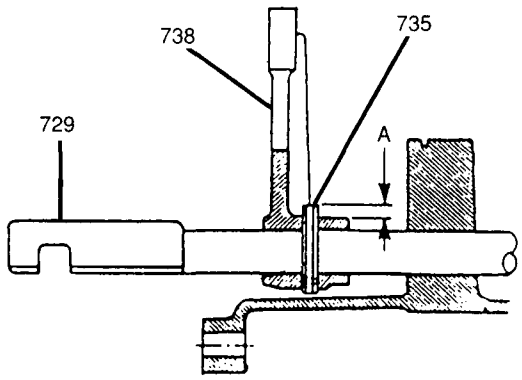

A 3.5–4.5 mm (0.138 – 0.177")
729 REVERSE GEARSHIFT SHAFT
735 REVERSE GEARSHIFT FORK ROLL PIN
738 REVERSE GEARSHIFT FORK
NC7250-7B1-JT-RS

Figure 50 Reverse Gearshift Roll Pin Installation

1. Reverse gearshift fork to reverse gearshift shaft; secure with reverse gearshift fork roll pin (Figure 50).

Important

- When installing the reverse gearshift fork roll pin, DO NOT press the roll pin in until it is flush with the gearshift fork. Allow a 3.5 to 4.5 mm (0.138 to 0.177-inch) protrusion above the gearshift fork (Figure 50).

2. Reverse gearshift shaft and interlock ball into upper case (Figure 51).

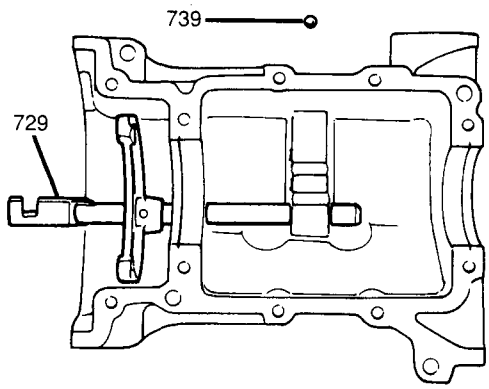

729 REVERSE GEARSHIFT SHAFT
739 INTERLOCK BALL
NC7122-7B1-JT-RS

Figure 51 Reverse Gearshift Shaft and Interlock Ball

- Place the reverse gearshift shaft into the neutral position.
- Fit interlock pin into high speed gearshift shaft.

3. High speed gearshift shaft into upper case with high speed gearshift fork; secure with high speed gearshift fork roll pin (Figure 52).

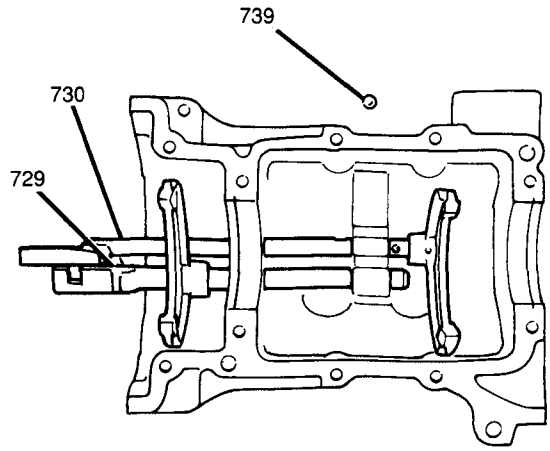

729 REVERSE GEARSHIFT SHAFT
730 HIGH SPEED GEARSHIFT SHAFT
739 INTERLOCK BALL
NC7123-7B1-JT-RS

Figure 52 High Speed Gearshift Shaft and Interlock Ball

4. Interlock ball into upper case (Figure 52).

- Place the high speed gearshift shaft into the neutral position.

5. Low speed gearshift shaft into upper case with low speed gear shift fork; secure with low speed gear shift fork roll pin.
- Apply RTV silicone sealer GM P/N 1052917, or equivalent, to the two rubber plugs.

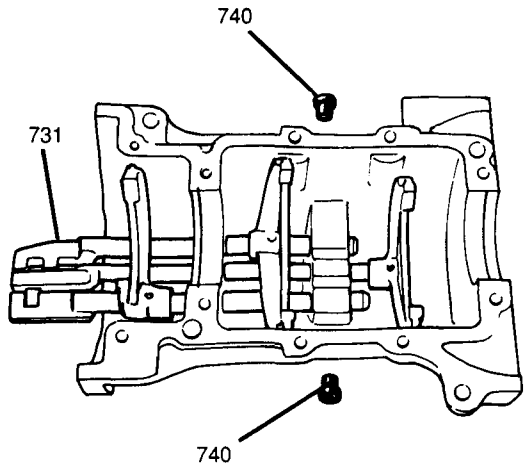

731 LOW SPEED GEARSHIFT SHAFT
740 RUBBER PLUG
NC7124-7B1-JT-RS

Figure 53 Installing Rubber Plugs

6. Two rubber plugs into upper case (Figure 53).

Inspect

- Interlock system operation (Figure 54). In 1st or 2nd gear position, a 3rd-to-4th or 5th-to-reverse gearshift should not be possible. In reverse gear position, a 1st-to-2nd or 3rd-to-4th gearshift should not be possible.

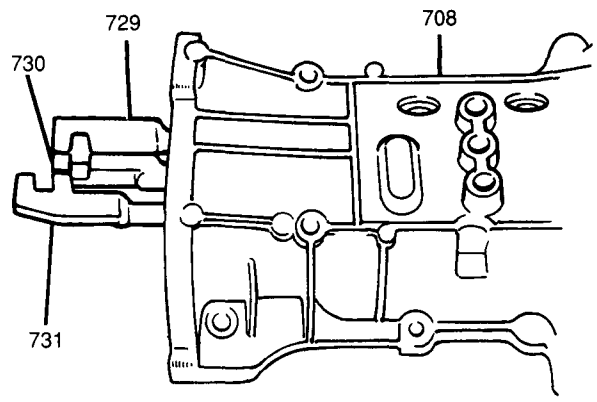

708 UPPER CASE
729 REVERSE GEARSHIFT SHAFT (NEUTRAL POSITION)
730 HIGH SPEED GEARSHIFT SHAFT (NEUTRAL POSITION)
731 LOW SPEED GEARSHIFT SHAFT (1ST GEAR POSITION)
NC7254-7B1-JT-RS

Figure 54 Inspecting Interlock System

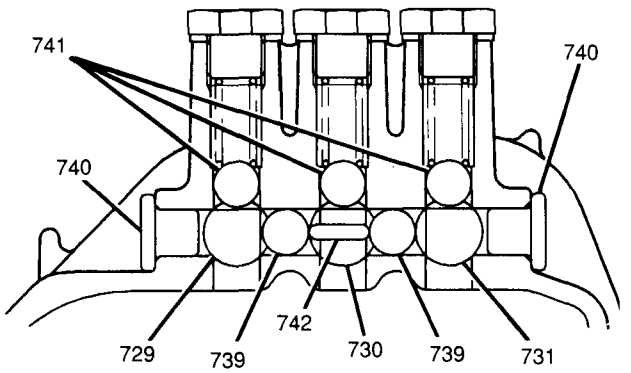

729 REVERSE GEARSHIFT SHAFT
730 HIGH SPEED GEARSHIFT SHAFT
731 LOW SPEED GEARSHIFT SHAFT
739 INTERLOCK BALL
740 RUBBER PLUG
741 LOCATING BALL
742 INTERLOCK PIN

NC7126-7B1-JT-RS

Figure 55 Interlock System Assembly

7. Three locating balls, three locating springs, three set washers and three locating spring bolts into upper case (Figure 55).

Tighten

- Locating spring bolts to 28 N·m (21 lb.ft.).

8. Backup lamp switch into upper case (Figure 44).

Tighten

- Backup lamp switch to 20 N·m (15 lb.ft.).

Extension Case

Figure 56

Remove or Disconnect

Tools Required:
J 6125-B Slide Hammer
J 23129 Converter Housing Seal and Extension Housing Oil Seal Remover

1. One bolt and speedometer driven gear case from extension case.
2. Two select return spring bolts, two select return springs and two select guide pins from extension case (Figure 56).
3. Extension case oil seal from extension case using a J 23129 with a J 6125-B.

Clean

- Extension case-to-upper and lower case mating surfaces.

Inspect

1. Extension case for cracks or porosity. Replace as necessary.
2. Select return springs for distortion or weakness. Replace as necessary.

Install or Connect

Tools Required:
J 37750 Oil Seal Installer
J 36850 Transjel® Transmission Assembly Lubricant

- Apply J 36850 to the extension case oil seal surface.

1. New extension case oil seal using a J 37771 and a hammer.

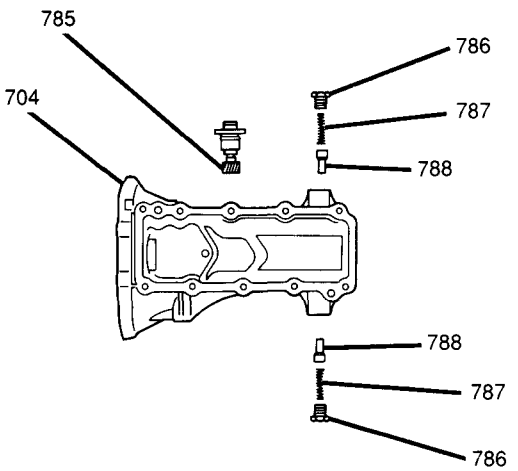

704 EXTENSION CASE
785 SPEEDOMETER DRIVEN GEAR
786 SELECT RETURN SPRING BOLT
787 SELECT RETURN SPRING
788 SELECT GUIDE PIN

NC7256-7B1-JT-RS

Figure 56 Installing Extension Case Components

2. Two select guide pins, two select return springs and two select return spring bolts into extension case (Figure 56).

Tighten

- Select return spring bolts to 32 N·m (24 lb.ft.).

- Apply J 36850 to the speedometer driven gear case O-ring.

3. Speedometer driven gear case into extension case; secure with one bolt (Figure 56).

Tighten

- Speedometer driven gear case retaining bolt to 12 N·m (106 lb.in.).

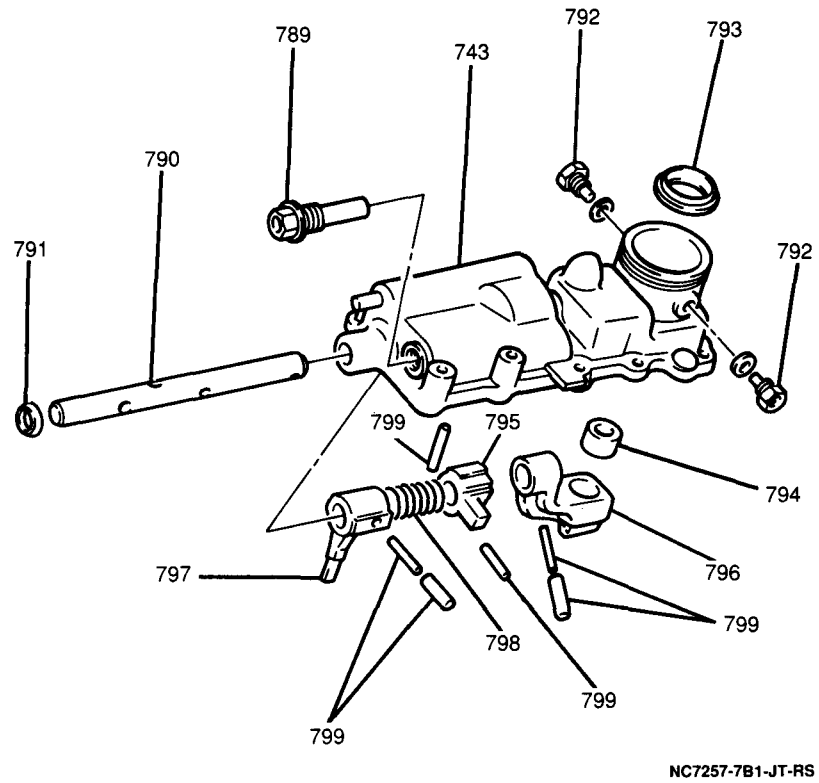

743 GEARSHIFT LEVER CASE
789 REVERSE GEARSHIFT LIMIT BOLT
790 GEARSHIFT SHAFT
791 GEARSHIFT LEVER CASE PLUG
792 LEVER LOCATING BOLT
793 GEARSHIFT LEVER CASE SEAT
794 GEARSHIFT CONTROL LEVER BUSHING
795 REVERSE GEARSHIFT LIMIT YOKE
796 GEARSHIFT ARM
797 GEARSHIFT LEVER
798 GEARSHIFT LIMIT SPRING
799 ROLL PIN

Figure 57 Gearshift Lever Case Components

Gearshift Lever Case

Figures 57, 58 and 59

Remove or Disconnect

1. Two roll pins and gearshift arm from gearshift shaft (Figure 57).
2. Gearshift control lever bushing from gearshift arm (Figure 57).
3. One roll pin from gearshift shaft releasing tension on gearshift limit spring.
4. One inner and outer roll pin from gearshift lever (Figure 57).

- Unstake gearshift lever case plug.

5. Gearshift lever case plug from gearshift lever case (Figure 57).
6. Gearshift shaft from gearshift lever case while simultaneously removing the gearshift lever, reverse gearshift limit yoke, and gearshift limit spring from the gearshift shaft.
7. Reverse gearshift limit bolt from gearshift lever case (Figure 57).

Important

- The select return components are located in either side of the extension case. For select return component removal and inspection procedures, refer to "Extension Case" earlier in this section.

8. Two lever locating bolts and two washers from gearshift lever case (Figure 57).
9. Gearshift lever case seat from gearshift lever case (Figure 57).

Clean

- All components thoroughly with solvent and air dry.

Inspect

1. Gearshift shaft by inserting into gearshift lever case and working back and forth while feeling for any binding. If gearshift shaft does not move freely in and out of the gearshift lever case, replace the gearshift lever case and gearshift shaft.
2. Gearshift lever, reverse gearshift limit yoke and gearshift arm for smooth fit and movement on the gearshift shaft. If any of the above components bind on the gearshift shaft, replace the gearshift shaft, gearshift lever, reverse gearshift limit yoke and gearshift arm.
3. Gearshift limit spring for weakness or distortion. Replace as necessary.
4. Gearshift control lever bushing for excessive wear. Replace as necessary.
5. Gearshift lever case seat for excessive wear. Replace as necessary.

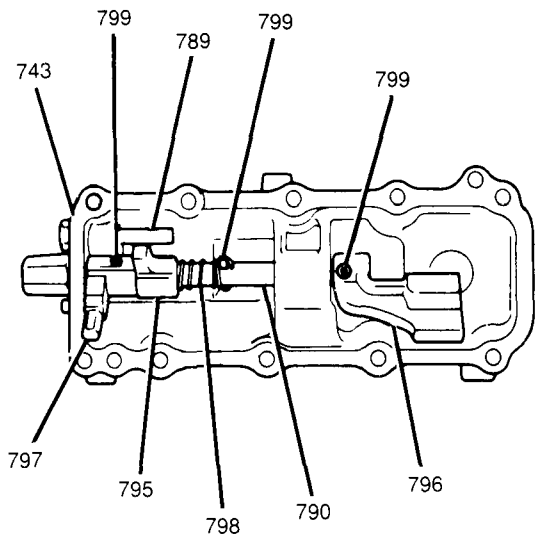

743 GEARSHIFT LEVER CASE
789 REVERSE GEARSHIFT LIMIT BOLT
790 GEARSHIFT SHAFT
795 REVERSE GEARSHIFT LIMIT YOKE
796 GEARSHIFT ARM
797 GEARSHIFT LEVER
798 GEARSHIFT LIMIT SPRING
799 ROLL PIN

NC7258-7B1-JT-RS

Figure 58 Gearshift Lever Case Assembly

Install or Connect

Tool Required:
J 36850 Transjel® Transmission Assembly Lubricant

- Apply a thin coat of J 36850 to all components prior to assembly.

1. Gearshift lever case seat into gearshift lever case.
2. Two lever locating bolts and washers into gearshift lever case.

Tighten

- Lever locating bolts to 20 N·m (15 lb.ft.).

- Apply Loctite®414 GM P/N 12345093, or equivalent, to the threaded portion of the reverse gearshift limit bolt.

3. Reverse gearshift limit bolt into gearshift lever case.

Tighten

- Reverse gearshift limit bolt to 35 N·m (26 lb.ft.).

Important

- The portion of the gearshift shaft which has been machined flat must be facing downward toward the inside of the gearshift lever case for correct installation.

4. Gearshift shaft into gearshift lever case while simultaneously installing the gearshift lever, reverse gearshift limit yoke and gearshift limit spring onto the gearshift shaft.
5. Gearshift lever case plug into gearshift lever case.

- Stake gearshift lever case plug in two places (Figure 59).

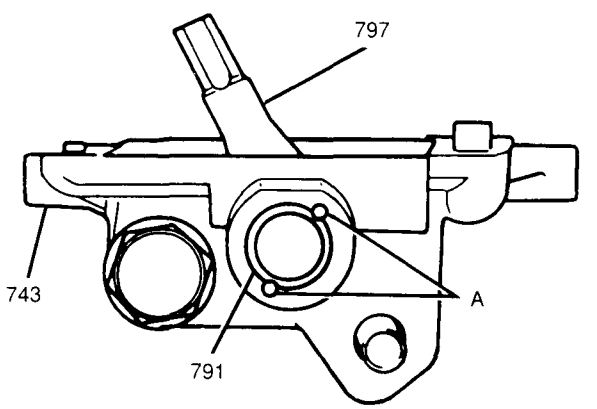

A STAKE MARKS
743 GEARSHIFT LEVER CASE
791 GEARSHIFT LEVER CASE PLUG
797 GEARSHIFT LEVER

NC7259-7B1-JT-RS

Figure 59 Staking Gearshift Lever Case Plug

6. One inner and outer roll pin into gearshift lever.
7. One roll pin into gearshift shaft to retain tension on gearshift limit spring.
8. One inner and outer roll pin into gearshift arm and gearshift shaft.

- Attach the hooked end of the gearshift limit spring around the roll pin shown in Figure 58. Then, wind the gearshift limit spring until the straight end can be fitted into the groove on the reverse gearshift limit yoke.

MANUAL TRANSMISSION ASSEMBLY

Figures 60 through 66

Install or Connect

Tool Required:
J 36850 Transjel® Transmission Assembly Lubricant

1. Input shaft with input shaft needle bearing onto main shaft (Figure 60).

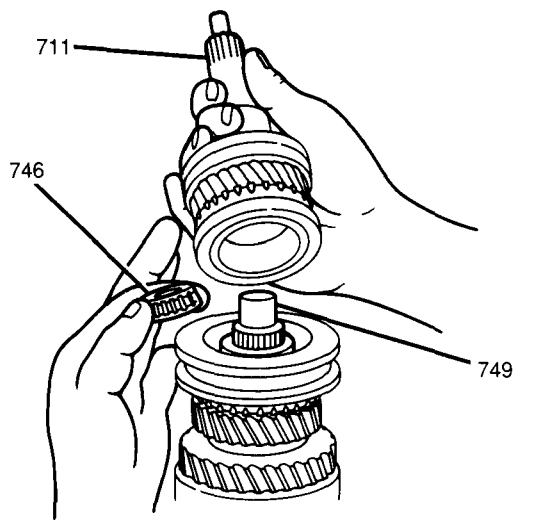

711 INPUT SHAFT
746 FRONT INPUT SHAFT NEEDLE BEARING
749 MAIN SHAFT
NC7260-7B1-JT-RS

Figure 60 Assembling Input Shaft and Main Shaft

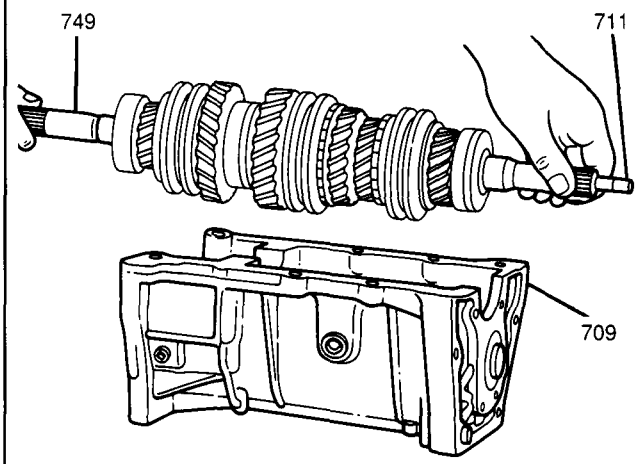

709 LOWER CASE
711 INPUT SHAFT
749 MAIN SHAFT
NC7261-7B1-JT-RS

Figure 61 Installing Main Shaft and Input Shaft Assembly

2. Main shaft and input shaft assembly into lower case (Figure 61).

- Move all gearshift shafts to their neutral position.

Inspect

- Main shaft and countershaft components for smooth engagement and rotation. If main shaft and countershaft fail to rotate smoothly, remove main shaft from lower case and inspect countershaft for binding.

- Apply RTV silicone sealer GM P/N 1052917, or equivalent, to the upper case mating surface (Figure 62).

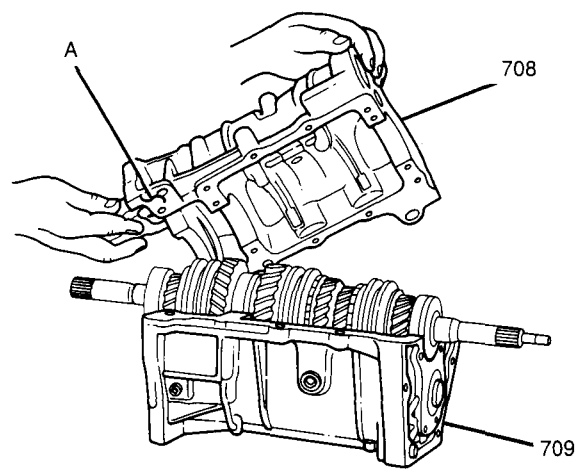

A APPLY RTV SEALER GM P/N 1052917, OR EQUIVALENT
708 UPPER CASE
709 LOWER CASE
NC7262-7B1-JT-RS

Figure 62 Assembling Upper Case and Lower Case

3. Upper case to lower case; secure with ten bolts (Figure 62).

Tighten

- Upper-to-lower case retaining bolts to 23 N·m (17 lb.ft.).

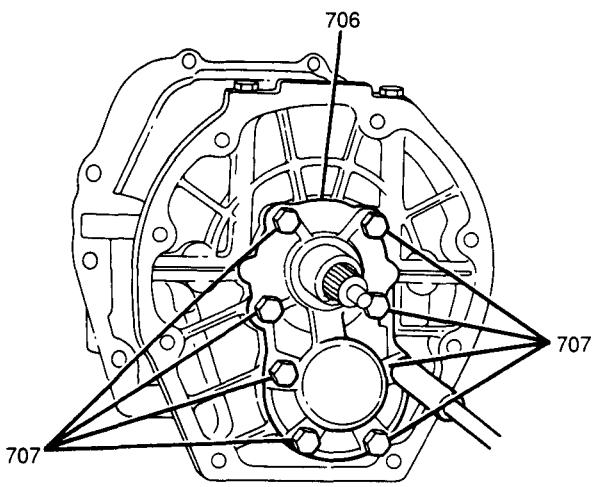

706 INPUT SHAFT BEARING RETAINER
707 INPUT SHAFT BEARING RETAINER BOLT
NC7263-7B1-JT-RS

Figure 63 Installing Input Shaft Bearing Retainer

4. Input shaft bearing retainer to upper and lower case; secure with eight bolts (Figure 63).

Tighten

- Input shaft bearing retainer bolts to 23 N·m (17 lb.ft.).

- Apply RTV sealer GM P/N 1052917, or equivalent, to the extension case mating surface (Figure 64).

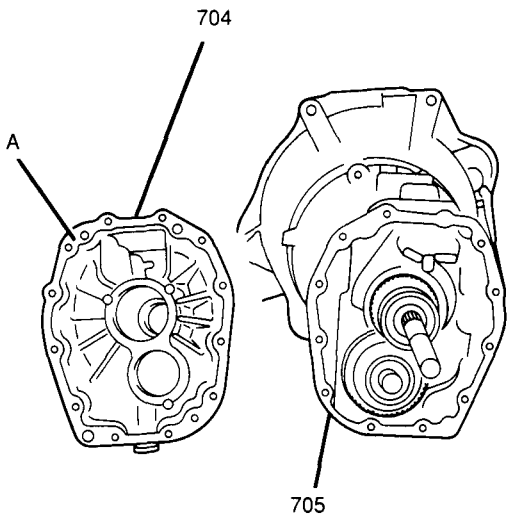

A APPLY RTV SEALER GM P/N 1052917, OR EQUIVALENT
704 EXTENSION CASE
705 TRANSMISSION ASSEMBLY
NC7264-7B1-JT-RS

Figure 64 Installing Extension Case

5. Extension case to rear of upper and lower case; secure with twelve bolts (Figure 64).

Tighten

- Extension case bolts to 23 N·m (17 lb.ft.).

- Apply RTV silicone sealer GM P/N 1052917, or equivalent, to the gearshift lever case mating surface.

6. Gearshift lever case to extension case; secure with ten bolts.

Tighten

- Gearshift lever case bolts to 17 N·m (12 lb.ft.).

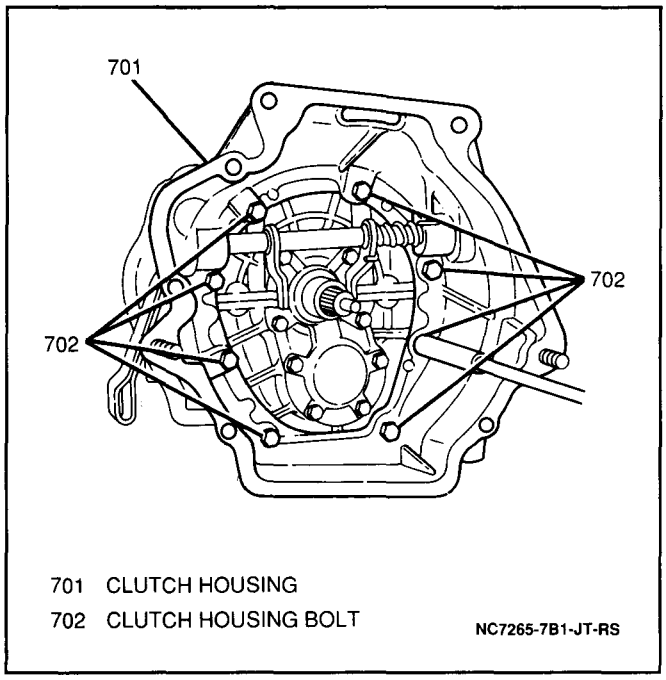

Figure 65 Installing Clutch Housing

7. Clutch housing to upper and lower case; secure with eight bolts (Figure 65).

Tighten

- Clutch housing bolts to 45 N·m (33 lb.ft.).

8. Clutch release bearing to input shaft (Figure 66).

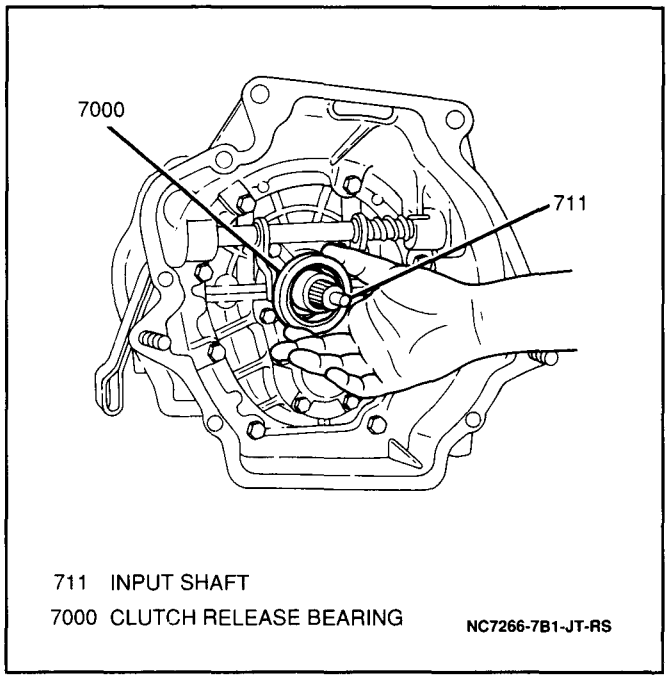

Figure 66 Installing Clutch Release Bearing

SPECIFICATIONS

FASTENER TORQUES

Countershaft Center Bearing Plate Bolts	6 N·m (53 lb.in.)
Reverse Idler Shaft Bolt	22 N·m (16 lb.ft.)
Locating Spring Bolts	28 N·m (21 lb.ft.)
Upper Case Retaining Bolts	23 N·m (17 lb.ft.)
Backup Lamp Switch	20 N·m (15 lb.ft.)
Select Return Spring Bolts	32 N·m (24 lb.ft.)
Speedometer Driven Gear Case Retaining Bolt	12 N·m (106 lb.in.)
Lever Locating Bolts	20 N·m (15 lb.ft.)
Reverse Gearshift Limit Bolt	35 N·m (26 lb.ft.)
Upper-to-Lower Case Retaining Bolts	23 N·m (17 lb.ft.)
Input Shaft Bearing Retainer Bolts	23 N·m (17 lb.ft.)
Extension Case Bolts	23 N·m (17 lb.ft.)
Gearshift Lever Case Bolts	17 N·m (12 lb.ft.)
Clutch Housing Bolts	45 N·m (33 lb.ft.)

MANUAL TRANSMISSION SPECIFICATIONS

Synchronizer Ring-to-Gear Clearance (Maximum)	1.0-1.4 mm (0.039-0.055 in.)
Synchronizer Ring Key Slot Width (Maximum)	10.1-10.4 mm (0.397-0.409 in.)
Gear Shift Fork-to-Synchronizer Sleeve Clearance (Maximum)	1.0 mm (0.039 in.)
Locating Spring Length: Standard Length	24.0-27.0 mm (0.945-1.063 in.)
Service Limit	24.0 mm (0.945 in.)

SERVICE PARTS INFORMATION

Component Name Used in Section 7B1	Reference Name in Service Parts Catalog	Group Number
Clutch Housing	Housing, Clutch	0.683
Clutch Release Bearing	Bearing, Engine Clutch Release	0.795
Clutch Housing Bolt	Bolt, Trans Rear Case (M8x1.25x30)	4.107
Extension Case	Case, Extension	4.317
Transmission Assembly	Transmission, ASM	4.103
Input Shaft Bearing Retainer.	Retainer, Input Shaft Bearing	4.104
Input Shaft Bearing Retainer Bolt	Bolt, Input Shaft Bearing Retainer (M8x1.25x25)	4.104
Upper Case	Case ASM, Transmission	4.103
Lower Case	Case ASM, Transmission	4.103
Countershaft	Shaft, Transmission Counter	4.428
Front Countershaft Bearing C-Clip	Circlip, Countershaft Front Bearing	4.423
Front Countershaft Bearing	Bearing ASM, Countershaft	4.422
Rear Countershaft Bearing	Bearing ASM, Countershaft Rear	4.423
Rear Countershaft Bearing C-Clip	Circlip, Countershaft Rear Bearing	4.423
Countershaft Reverse Gear	Gear, Transmission Countershaft Reverse	4.417
Countershaft Center Bearing Plate	Plate, Trans Countershaft Center Bearing	4.422
Countershaft Center Bearing Plate Bolt	Bolt, Trans Countershaft Center Bearing Plate (M6x1x16)	4.422
Countershaft Center Bearing	Bearing, Countershaft Center	4.422
Countershaft 5th Gear	Gear, Trans Countershaft 5th Gear	4.422
Friction Gear	Gear, Friction	4.421
Friction Gear Retainer	Retainer, Friction Gear	4.422
Reverse Idler Gear Needle Bearing	Bearing, Transmission Reverse Idler Gear	4.431
Reverse Idler Gear	Gear, Transmission Reverse Idler	4.430
Reverse Idler Shaft Bolt	Bolt, Transmission Shaft Reverse Idler Shaft	4.435
Reverse Idler Shaft	Shaft, Transmission Reverse Idler Gear	4.433
Input Shaft	Shaft, Transmission Input	4.351
Front Input Shaft Oil Seal	Seal, Input Shaft Oil	4.354
Front Input Shaft Bearing	Bearing ASM, Input Shaft Front	4.352
Front Input Shaft Needle Bearing	Bearing, Input Shaft Pocket	4.352
Front Input Shaft Bearing C-Clip	Circlip, Input Shaft Front Bearing	4.353
Main Shaft	Shaft, Transmission Main	4.403
Main Shaft 1st Gear	Gear, Main Shaft Low	4.417
Main Shaft 2nd Gear	Gear, Main Shaft 2nd	4.395

Main Shaft 3rd Gear	Gear, Main Shaft 3rd	4.415
Main Shaft 5th Gear	Gear, Main Shaft 5th	4.415
Main Shaft Reverse Gear	Gear, Transmission Main Shaft Reverse	4.417
Main Shaft Rear Bearing	Bearing ASM, Main Shaft Rear	4.408
Main Shaft 1st Gear Bushing	Bushing, Main Shaft Low Gear	4.419
Main Shaft Reverse Gear Bushing	Bushing, Transmission Main Shaft Reverse Gear	4.419
Main Shaft 1st Gear Needle Bearing	Bearing, Main Shaft Low Gear	4.419
Main Shaft 2nd Gear Needle Bearing	Bearing, Main Shaft 2nd Gear	4.398
Main Shaft 3rd Gear Needle Bearing	Bearing, Main Shaft 3rd Gear	4.352
Main Shaft 5th Gear Needle Bearing	Bearing, Main Shaft 5th Gear	4.352
Main Shaft Reverse Gear Needle Bearing	Bearing, Transmission Main Shaft Reverse Gear	4.419
Main Shaft Bearing Washer	Washer, Main Shaft Bearing	4.406
Main Shaft 5th Gear Washer	Washer, Main Shaft 5th Gear	4.415
Main Shaft Center Bearing	Bearing, Main Shaft Center	4.408
Main Shaft Rear Bearing C-Clip	Circlip, Main Shaft Rear Bearing	4.412
Backup Lamp Switch	Switch ASM, Backup Lamp	2.698
Locating Spring Bolts	Screw, Gear Shift Locating	4.311
Reverse Gearshift Shaft	Shaft, Reverse Gear Shift	4.309
High Speed Gearshift Shaft	Shaft, High Speed Gear Shift	4.309
Low Speed Gearshift Shaft	Shaft, Low Speed Gear Shift	4.309
Low Speed Gearshift Fork	Fork, Low Speed Gear Shift	4.303
High Speed Gearshift Fork.	Fork, High and Reverse Gear Shift	4.303
Reverse Gearshift Fork	Fork, High and Reverse Gear Shift	4.303
Reverse Gearshift Fork Roll Pin	Pin, Gear Shift Fork Rev	4.302
High Speed Gearshift Fork Roll Pin	Pin, Gear Shift Fork	4.303
Low Speed Gearshift Fork Roll Pin	Pin. Gear Shift Fork	4.303
Locating Ball	Ball, Gear Shift Locating	4.311
Locating Spring.	Spring, Gear Shift Locating	4.311
Interlock Ball	Ball, Gear Shift Locating	4.311
Rubber Plug	Plug, Gear Shift Locating	4.307
Interlock Pin	Roller, Gear Shift Locating	4.311
Speedometer Drive Gear Retaining Ring	Circlip, Gear	4.412
Speedometer Drive Gear	Gear, Speedo Drive	4.343
Speedometer Driven Gear	Gear, Speedo Driven	4.347
Synchronizer Key	Key, Main Shaft Low and High Speed Synchronizer Hub	4.384
Low Speed Synchronizer Hub	Hub, Main Shaft Synchronizer Low Speed	4.384
Low Speed Synchronizer Ring	Ring, Main Shaft Synchronizer Low Speed	4.384
Low Speed Synchronizer Sleeve.	Sleeve, Main Shaft Synchronizer Low Speed	4.384
Low Speed Synchronizer Spring.	Spring, Main Shaft Synchronizer Low Speed	4.384
Main Shaft Washer Ball	Ball, Main Shaft Washer	4.399
High Speed Synchronizer Hub	Hub, Main Shaft Synchronizer High Speed	4.384
High Speed Synchronizer Ring	Ring, Main Shaft Synchronizer High Speed	4.384
High Speed Synchronizer Sleeve	Sleeve, Main Shaft Synchronizer High Speed	4.384
High Speed Synchronizer Spring	Spring, Main Shaft Synchronizer High Speed	4.384
High Speed and Reverse Hub C-Clip	Circlip, High Speed and Reverse Hub..	4.399
Reverse Synchronizer Sleeve.	Sleeve, Main Shaft Synchronizer Reverse	4.384
Reverse Synchronizer Hub	Hub, Main Shaft Synchronizer Reverse	4.384
Select Return Spring Bolt	Plug, Select Return Spring.	4.302
Select Return Spring	Spring, Select Return	4.302
Select Guide Pin	Pin. Select Guide	4.302
Gearshift Lever Case	Case, Gear Shift Lever	4.105
Reverse Gearshift Limit Bolt	Bolt, Rev GR Shift Limiting	4.302
Gearshift Shaft	Shaft, Gear Shift	4.302
Gearshift Lever Case Plug	Plug, Gear Shift Lever Case Shaft	4.103
Lever Locating Bolt	Bolt, Lever Locating	4.307
Gearshift Lever Case Seat	Seat, Gear Shift Lever Case	4.012
Gearshift Control Lever Bushing	Bushing, Gear Shift Control Lever	4.037
Reverse Gearshift Limit Yoke	Yoke, Reverse Gear Shift Limiting	4.303
Gearshift Arm	Arm, Gear Shift	4.303
Gearshift Lever	Lever, Gear Shift	4.302
Gearshift Limit Spring	Spring, Gearshift Limiting	4.307
Roll Pin	Pin, Gear Shift Yoke	4.302

SPECIAL TOOLS

1
J 37637

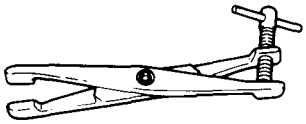

2
J 34757

3
J 22888-20

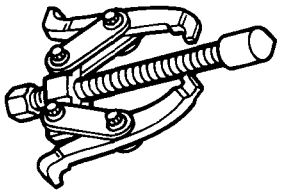

4
J 22888-30

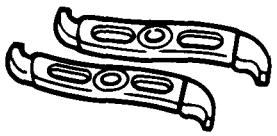

5
J 37754

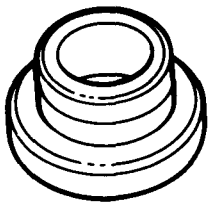

6
J 35664

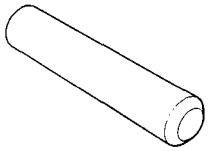

7
J 35871

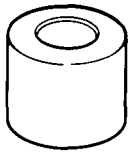

8
J 22912-01

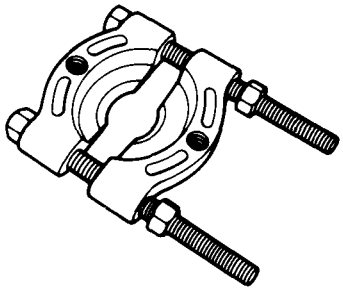

1 CASE SEPARATOR
2 CIRCLIP REMOVER
3 UNIVERSAL PULLER
4 PULLER LEGS
5 COUNTERSHAFT BEARING INSTALLER
6 BEARING INSTALLER
7 COUNTERSHAFT FRONT BEARING INSTALLER
8 SPLIT PLATE

NC7267-7B1-JT-RS

9
J 26941

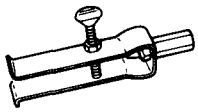

13
J 36850

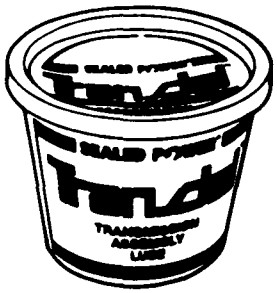

10
J 23907

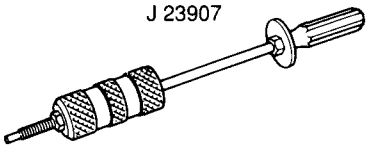

14
J 28406

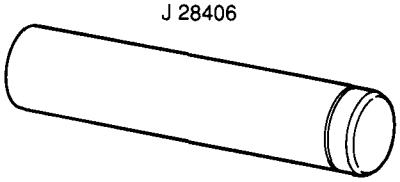

11
J 37209

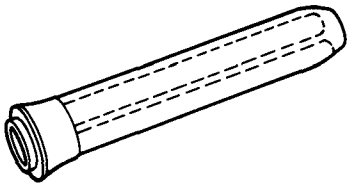

15
J 26900-7

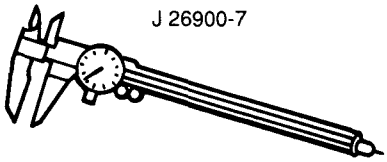

12
J 37753

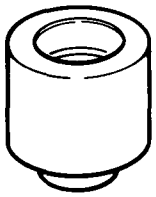

16
J 35425

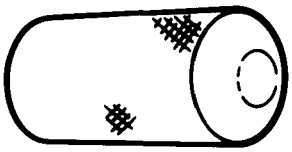

9 TRANSMISSION CASE BEARING CUP REMOVE
10 SLIDE HAMMER
11 STUB SHAFT SEAL INSTALLER
12 BEARING INSTALLER
13 TRANSJEL® TRANSMISSION ASSEMBLY LUBRICANT
14 BEARING INSTALLER
15 DIAL CALIPER
16 HIGH SPEED HUB INSTALLER

NC7268-7B1-JT-RS

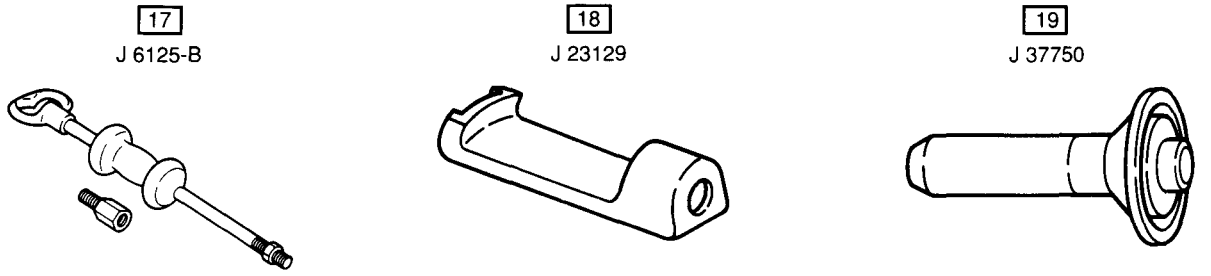

17 SLIDE HAMMER

18 CONVERTER HOUSING SEAL AND EXTENSION HOUSING OIL SEAL REMOVER

19 OIL SEAL INSTALLER

NC7269-7B1-JT-RS

SECTION 7B-11

4WD MANUAL TRANSMISSION – UNIT REPAIR

NOTICE: When fasteners are removed, always reinstall them at the same location from which they were removed. If a fastener needs to be replaced, use the correct part number fastener for that application. If the correct part number fastener is not available, a fastener of equal size and strength (or stronger) may be used. Fasteners that are not reused, and those requiring thread-locking compound, will be called out. The correct torque values must be used when installing fasteners that require them. If the above procedures are not followed, parts or system damage could result.

CONTENTS

Unit Repair 7B-11-1
Manual Transmission Disassembly 7B-11-1
Lower Case, Countershaft and Reverse Idler Gear 7B-11-2
Input Shaft 7B-11-8
Main Shaft 7B-11-9
Upper Case, Gearshift Shafts and Gearshift Forks 7B-11-18
Rear Case 7B-11-22
Gearshift Lever Case 7B-11-24
Manual Transmission Assembly 7B-11-27
Specifications 7B-11-30
Fastener Torques 7B-11-30
Manual Transmission Specifications 7B-11-30
Service Parts Information 7B-11-30
Special Tools 7B-11-32

UNIT REPAIR

MANUAL TRANSMISSION DISASSEMBLY

Figures 1 through 4

Remove or Disconnect

Tool Required:
J 37637 Case Separator

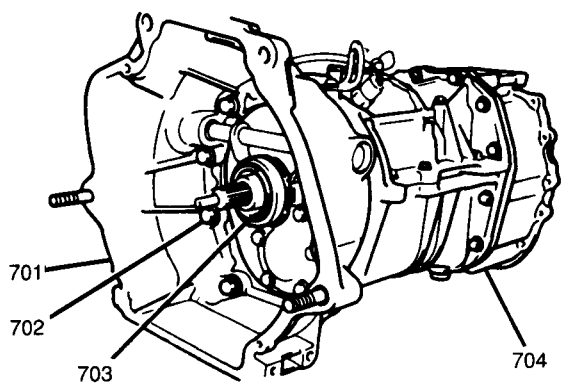

701 CLUTCH HOUSING
702 CLUTCH HOUSING BOLTS
703 CLUTCH RELEASE BEARING
704 REAR CASE

NC7101-7B2-JT-RS

Figure 1 Clutch Housing and Release Bearing

1. Clutch release bearing from input shaft (Figure 1).
2. Eight clutch housing bolts and clutch housing from upper and lower case (Figure 1).
3. Four bolts and gearshift lever case from rear case.
4. Twelve bolts and rear case from upper and lower case (Figure 2).

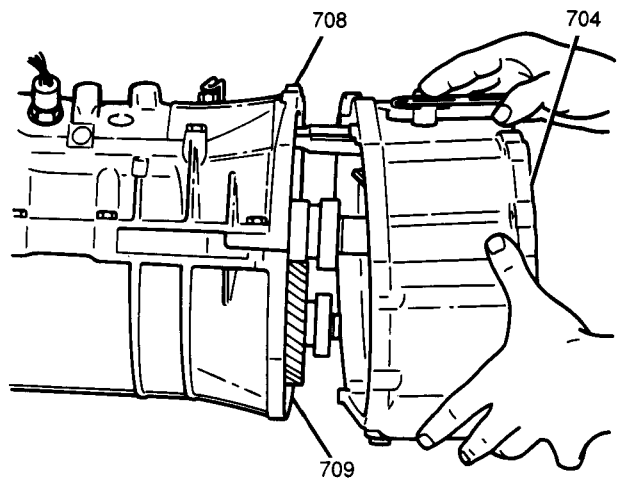

704 REAR CASE
708 UPPER CASE
709 LOWER CASE

NC7202-7B2-JT-RS

Figure 2 Removing Rear Case

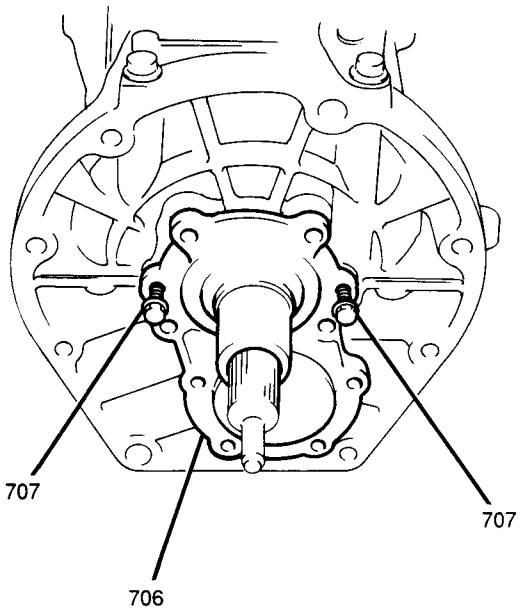

706 INPUT SHAFT BEARING RETAINER
707 INPUT SHAFT BEARING RETAINER BOLTS
NC7103-7B1-JT-RS

Figure 3 Input Shaft Bearing Retainer Removal

5. Eight bolts from input shaft bearing retainer. Thread the last two bolts into the unused holes of the input shaft bearing retainer flange (Figure 3), and tighten until the bolts push against the transmission case allowing the input shaft bearing retainer to be removed.
6. Input shaft bearing retainer from upper and lower case.
7. Ten upper-to-lower case retaining bolts and separate upper and lower case halves using a J 37637 (Figure 4).

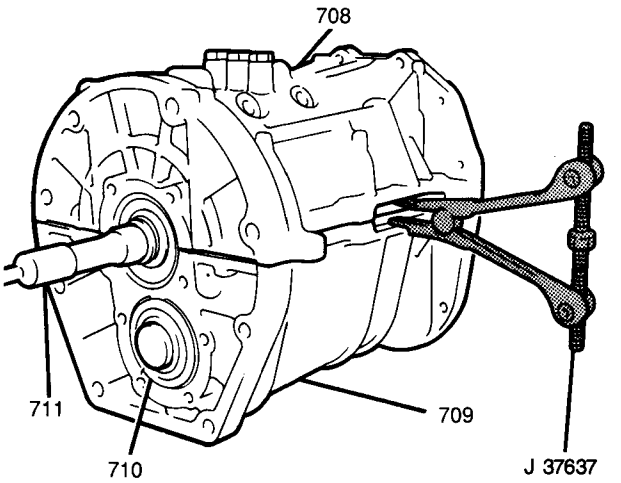

708 UPPER CASE 710 COUNTERSHAFT
709 LOWER CASE 711 INPUT SHAFT
NC7104-7B1-JT-RS

Figure 4 Separating Upper and Lower Cases

8. Main shaft and input shaft assembly from lower case.
9. Input shaft and input shaft needle bearing from main shaft.

Important

- The input shaft rides on a needle bearing between the input shaft and main shaft assembly. When separating the input shaft from the main shaft assembly, the needle bearing may remain either in the input shaft or on the main shaft assembly. Remove the input shaft needle bearing to prevent damage when servicing the input shaft and main shaft assembly.

Lower Case, Countershaft and Reverse Idler Gear

Figures 5 through 15

Remove or Disconnect

Tools Required:
J 34757 Circlip Remover
J 22888-20 Universal Puller
J 22888-30 Puller Legs

1. Rear countershaft bearing C-clip from countershaft using a J 34757 (Figure 5).

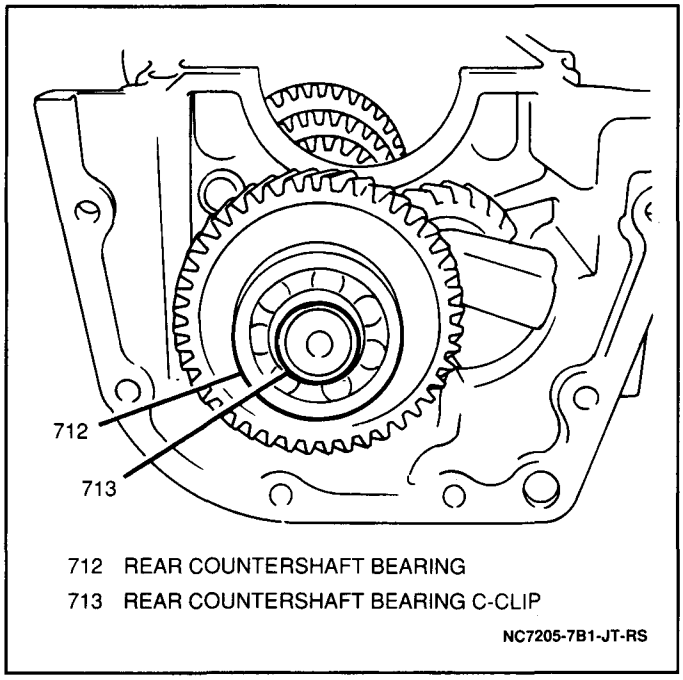

Figure 5 Rear Countershaft Bearing C-Clip

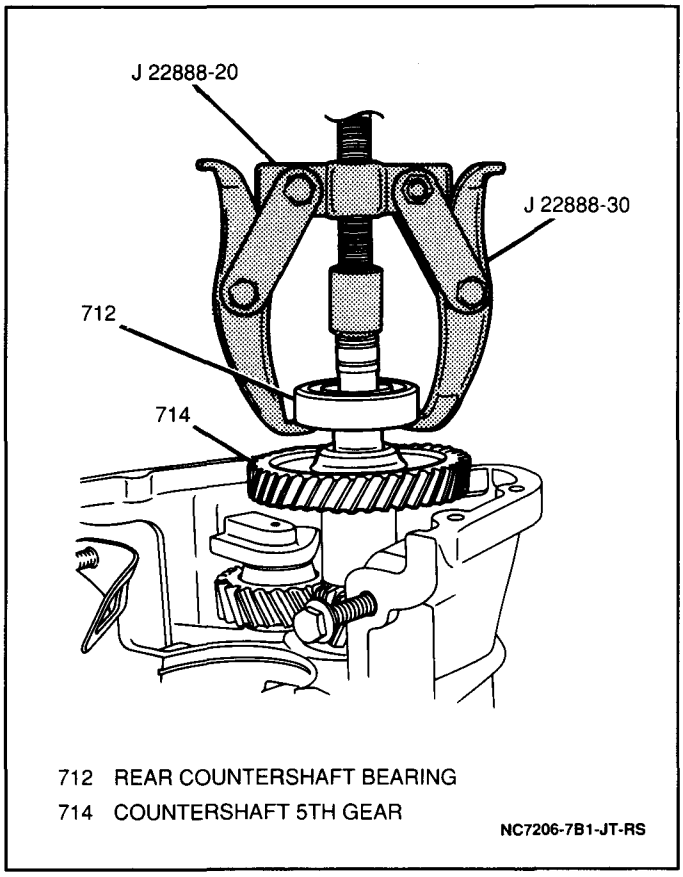

Figure 6 Removing Rear Countershaft Bearing

2. Rear countershaft bearing from countershaft using a J 22888-20 with the J 22888-30 (Figure 6).
3. Countershaft 5th gear and reverse gear from countershaft, one at a time by hand.
4. Reverse idler shaft bolt, reverse idler shaft and reverse idler gear from lower case (Figure 7).

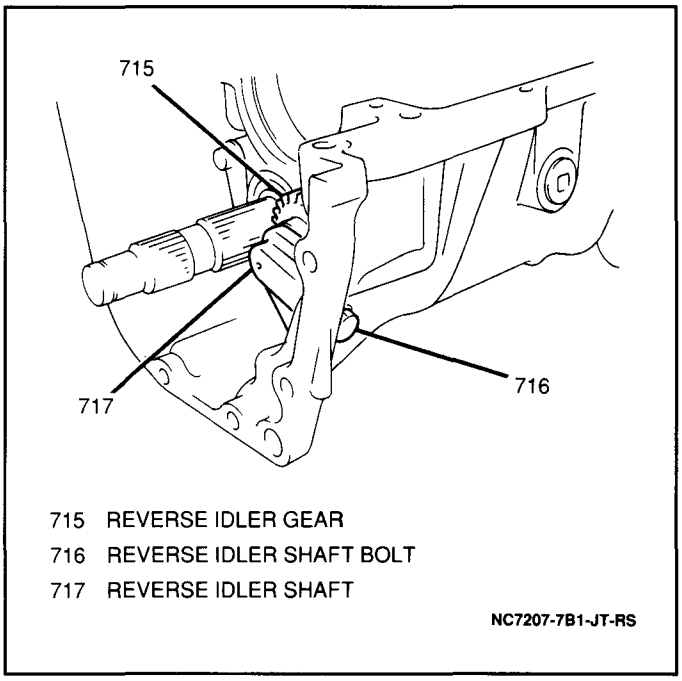

Figure 7 Reverse Idler Gear and Shaft

5. Reverse idler gear thrust washer, reverse idler gear needle bearing and reverse idler gear from reverse idler shaft.
6. Two bolts and countershaft center bearing plate from lower case (Figure 8).

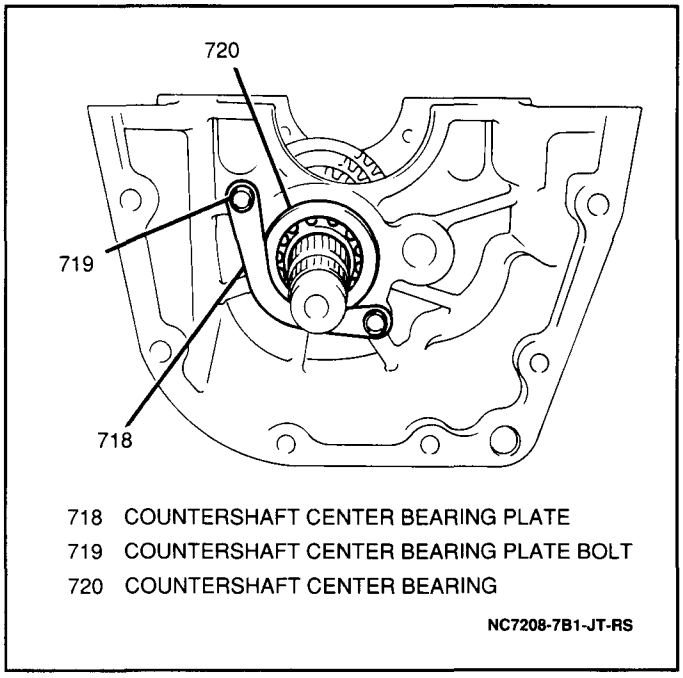

Figure 8 Countershaft Center Bearing Plate

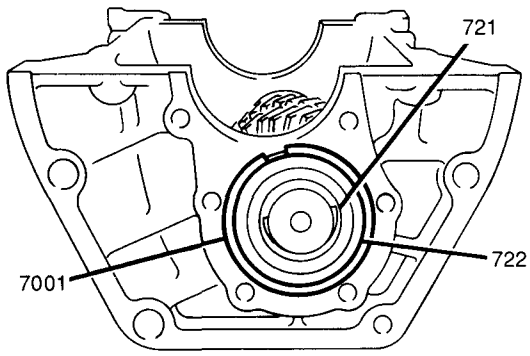

721 FRONT COUNTERSHAFT BEARING C-CLIP
722 FRONT COUNTERSHAFT BEARING
7001 FRONT COUNTERSHAFT BEARING C-RING
NC7209-7B1-JT-RS

Figure 9 Front Countershaft Bearing C-Ring

7. Front countershaft bearing C-ring from front countershaft bearing (Figure 9).

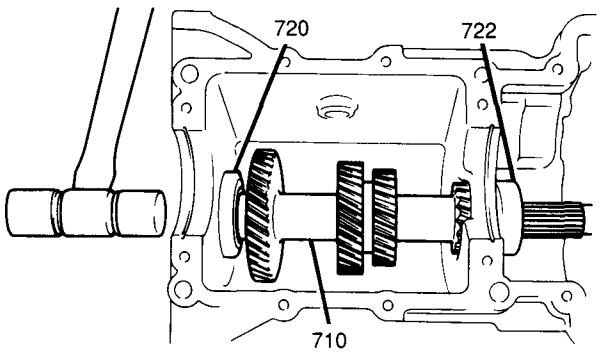

710 COUNTERSHAFT
720 COUNTERSHAFT CENTER BEARING
722 FRONT COUNTERSHAFT BEARING
NC7210-7B2-JT-RS

Figure 10 Removing Countershaft

- Lightly tap the countershaft rearward in the lower case and remove the countershaft center bearing by hand. Then, pull the countershaft forward and remove it from the lower case (Figure 10).

8. Front countershaft bearing C-clip from countershaft using the J 34757.
9. Front countershaft bearing from countershaft using the J 22888-20 with the J 22888-30 (Figure 11).

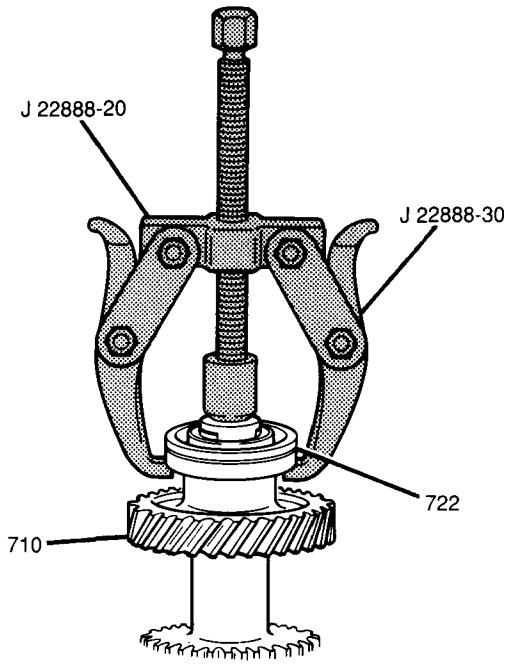

710 COUNTERSHAFT
722 FRONT COUNTERSHAFT BEARING
NC7211-7B2-JT-RS

Figure 11 Removing Front Countershaft Bearing

10. Friction gear snap ring, friction gear retainer, friction gear retainer pin, friction gear spring and friction gear from countershaft.

Clean

- Lower case mating surfaces and all countershaft components with solvent and dry thoroughly.

Inspect

- All gear tooth surfaces for excessive wear or damage and bearings for smooth rotation. Replace as necessary.

Install or Connect

Tools Required:
J 37754 Countershaft Bearing Installer
J 35664 Bearing Installer
J 35871 Countershaft Front Bearing Installer

1. Friction gear, friction gear spring, friction gear retainer pin, friction gear retainer and friction gear snap ring onto countershaft.
2. Front countershaft bearing onto countershaft using a J 35871 (Figure 12).

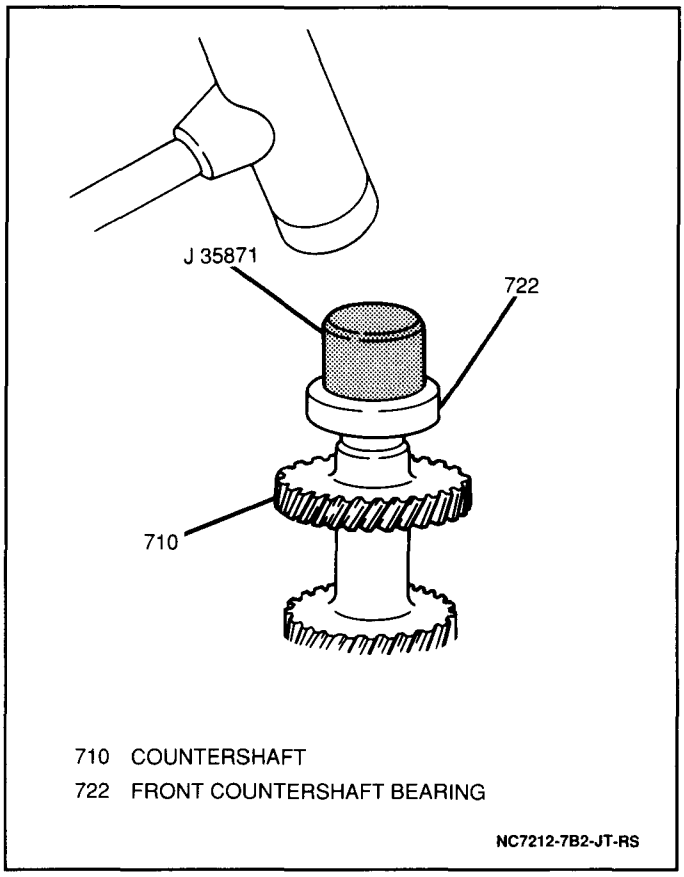

Figure 12 Installing Front Countershaft Bearing

3. Front countershaft bearing C-clip onto countershaft.
4. Countershaft center bearing onto countershaft and countershaft into lower case by pressing countershaft and center bearing into lower case using a J 35664 with a J 37754 (Figure 13).

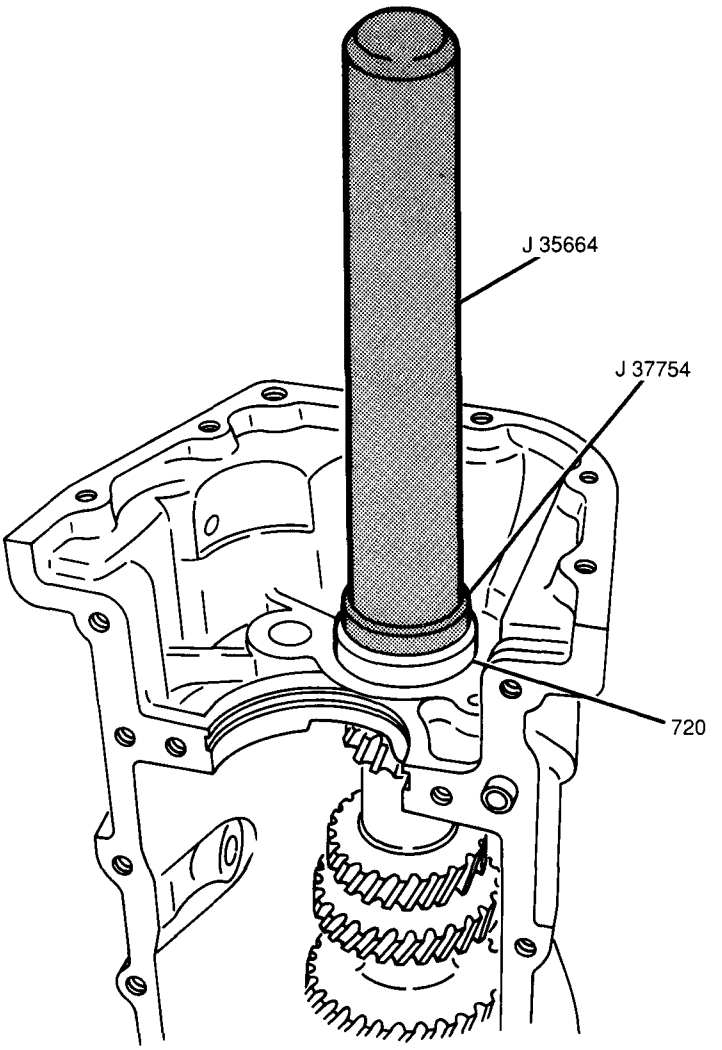

720 COUNTERSHAFT CENTER BEARING

NC7113-7B1-JT-RS

Figure 13 Installing Countershaft and Countershaft Center Bearing

5. Front countershaft bearing C-ring onto front countershaft bearing and position countershaft so that the front countershaft bearing C-ring makes light contact with the lower case (Figure 9).
- Apply Loctite® 414 GM P/N 12345093, or equivalent, to the threaded portion of the countershaft center bearing plate bolts.
6. Countershaft center bearing plate into lower case; secure with two bolts.

Tighten

- Countershaft center bearing plate bolts to 6 N·m (53 lb.in.).

7. Reverse idler gear, reverse idler gear needle bearing and reverse idler gear thrust washer onto reverse idler shaft (Figure 14).
- Apply Loctite® 414 GM P/N 12345093, or equivalent, to the threaded portion of the reverse idler shaft bolt.
8. Reverse idler gear with reverse idler shaft into lower case; secure with one washer and one bolt (Figure 14).

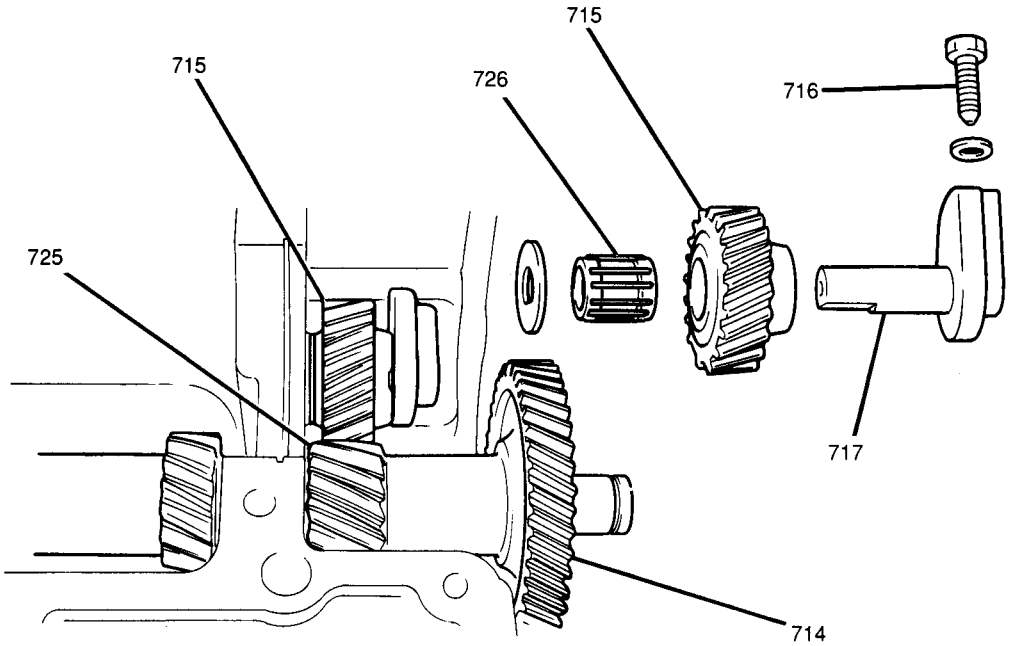

714 COUNTERSHAFT 5TH GEAR
715 REVERSE IDLER GEAR
716 REVERSE IDLER SHAFT BOLT
717 REVERSE IDLER SHAFT
725 COUNTERSHAFT REVERSE GEAR
726 REVERSE IDLER GEAR NEEDLE BEARING
NC7214-7B1-JT-RS

Figure 14 Reverse Idler Gear and Shaft Installation

Important

- An aluminum washer must be used on the reverse idler shaft bolt in order to seat the reverse idler shaft bolt head without causing damage to the lower case.

Tighten

- Reverse idler shaft bolt to 22 N·m (16 lb.ft.).

9. Countershaft reverse gear and countershaft 5th gear onto countershaft.
10. Rear countershaft bearing onto countershaft using the J 37754 with a J 35664 (Figure 15).
11. Rear countershaft bearing C-clip onto countershaft.

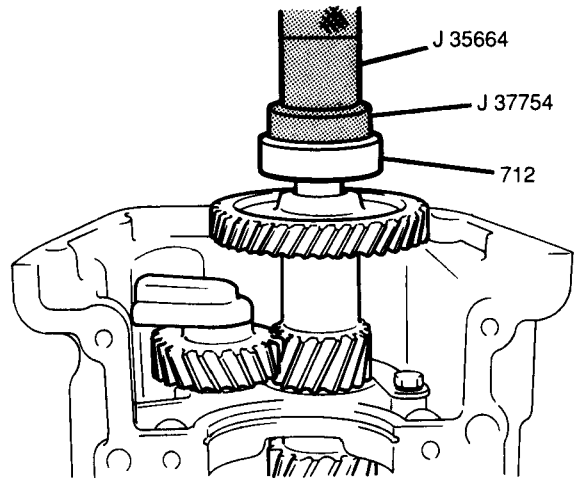

712 REAR COUNTERSHAFT BEARING NC7215-7B1-JT-RS

Figure 15 Installing Rear Countershaft Bearing

Input Shaft

Figures 16 through 20

Remove or Disconnect

Tools Required:
- J 34757 Circlip Remover
- J 22912-01 Split Plate
- J 26941 Transmission Case Bearing Cup Remover
- J 23907 Slide Hammer

1. Input shaft needle bearing from input shaft.
2. Front input shaft bearing C-clip from the input shaft using a J 34757.
3. Front input shaft bearing from input shaft using a J 22912-01 and a press arbor (Figure 16).

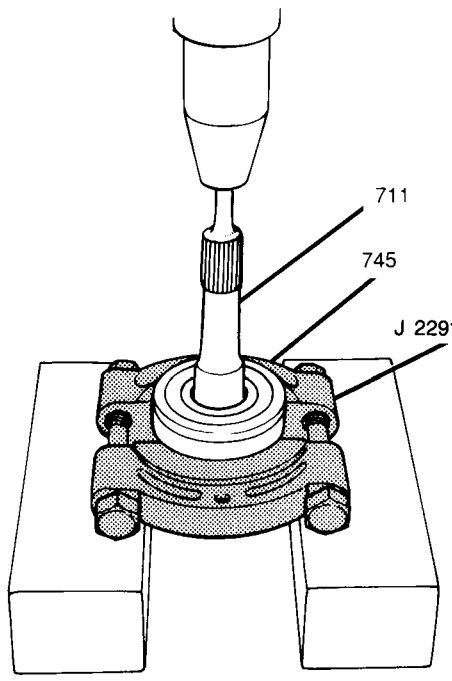

711 INPUT SHAFT
745 FRONT INPUT SHAFT BEARING NC7216-7B1-JT-RS

Figure 16 Removing Front Input Shaft Bearing

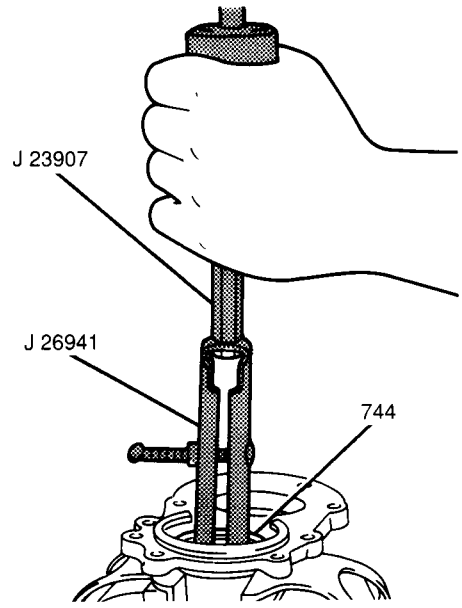

744 FRONT INPUT SHAFT OIL SEAL NC7217-7B1-JT-RS

Figure 17 Removing Front Input Shaft Oil Seal

4. Front input shaft oil seal from the input shaft bearing retainer using a J 26941 with a J 23907 (Figure 17).

Clean

1. Input shaft components with solvent and air dry.
2. Input shaft bearing retainer mating surface.

Inspect

1. Input shaft for scoring or excessive wear. Replace as necessary.
2. Input shaft bearing for roughness or wear. Replace as necessary.
3. Input shaft needle bearing for roughness or damage. Replace as necessary.

Install or Connect

Tools Required:
- J 37209 Stub Shaft Seal Installer
- J 37753 Bearing Installer
- J 35664 Bearing Installer
- J 36850 Transjel® Transmission Assembly Lubricant

- Apply J 36850 to the input shaft bearing retainer seal surface.

1. New front input shaft oil seal into the input shaft bearing retainer using a J 37209 and a hammer (Figure 18).

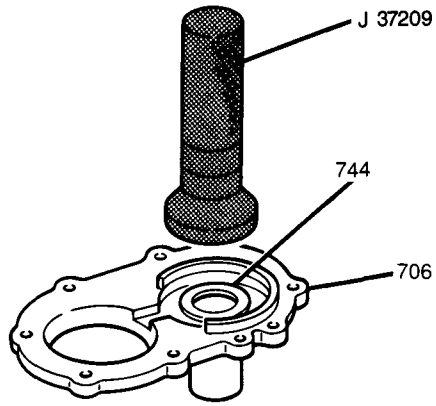

706 INPUT SHAFT BEARING RETAINER
744 FRONT INPUT SHAFT OIL SEAL NC7218-7B1-JT-RS

Figure 18 Installing Front Input Shaft Oil Seal

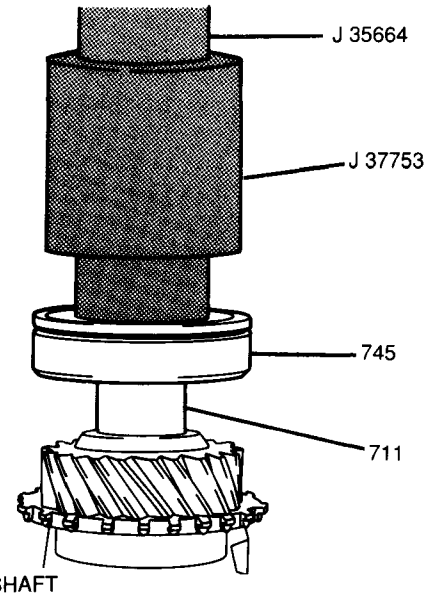

711 INPUT SHAFT
745 FRONT INPUT SHAFT BEARING NC7219-7B1-JT-RS

Figure 19 Installing Front Input Shaft Bearing

2. Front input shaft bearing onto input shaft using a J 37753 with a J 35664 and a press arbor (Figure 19).
3. Front input shaft bearing C-clip onto input shaft.
- Apply J 36850 to the input shaft needle bearing.
4. Input shaft needle bearing into input shaft (Figure 20).

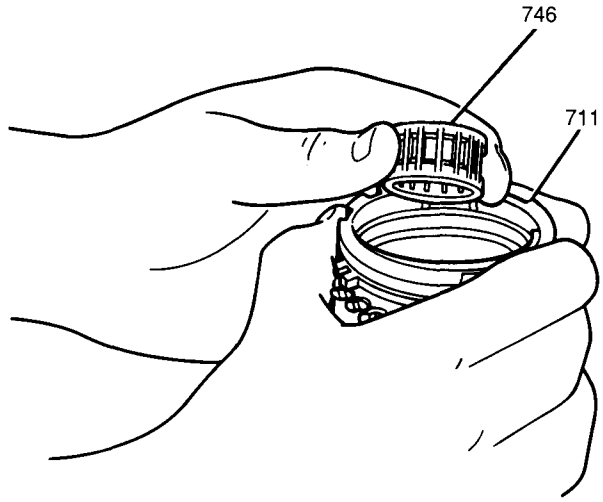

711 INPUT SHAFT
746 FRONT INPUT SHAFT NEEDLE BEARING
NC7220-7B1-JT-RS

Figure 20 Installing Input Shaft Needle Bearing

Main Shaft

Figures 20 through 41

Remove or Disconnect

Tools Required:
J 34757 Circlip Remover
J 22912-01 Split Plate

Important

- The main shaft 1st gear and reverse gear bushings are identical as are the main shaft 1st and 2nd gear needle bearings. Make note of these components and their positions during disassembly to ensure correct assembly and operation.

1. High speed and reverse hub C-clip from main shaft using a J 34757.
2. High speed synchronizer rings, high speed sleeve and hub assembly, main shaft 3rd gear and main shaft 3rd gear needle bearing from main shaft using a J 22912-01 and a press arbor (Figure 21).

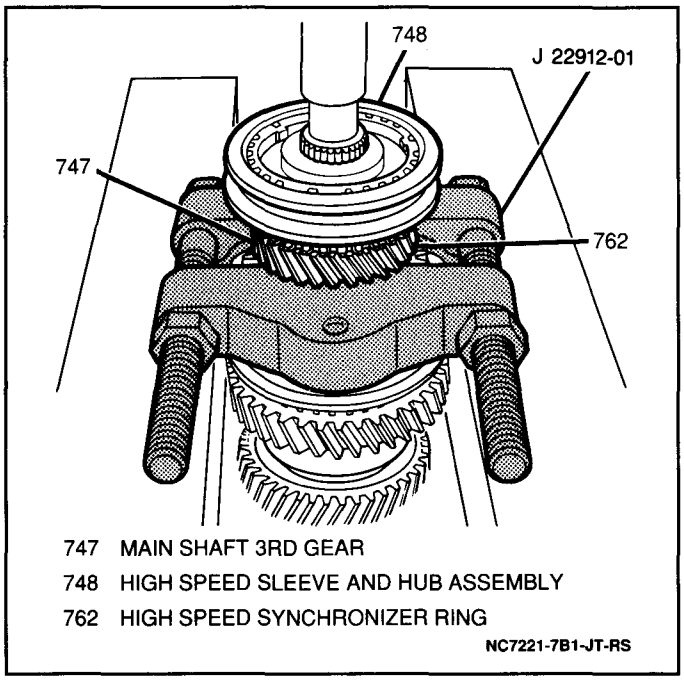

Figure 21 Removing Main Shaft 3rd Gear and High Speed Sleeve and Hub Assembly

3. High speed synchronizer sleeve from high speed synchronizer hub.
4. High speed synchronizer springs and three synchronizer keys from high speed synchronizer hub.
5. Main shaft rear bearing C-clip from main shaft using the J 34757.
6. Main shaft rear bearing from main shaft using the J 22912-01 and a press arbor (Figure 22).

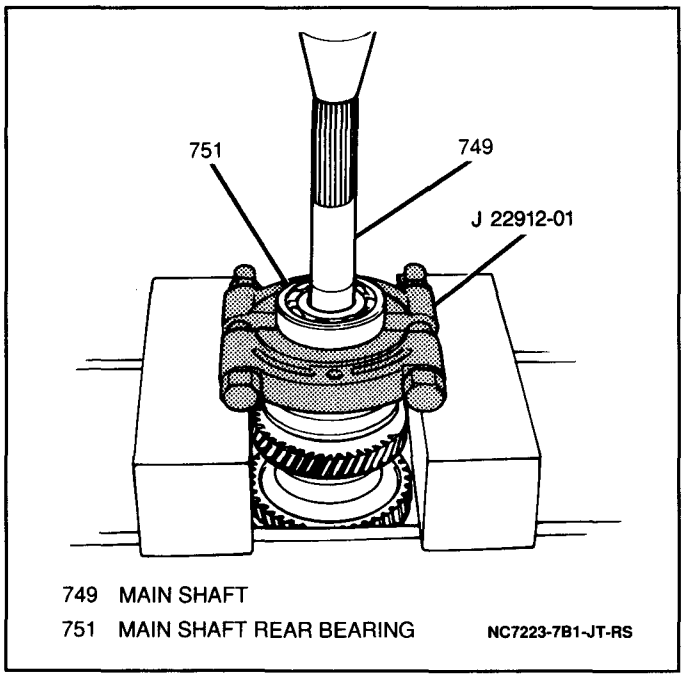

Figure 22 Removing Main Shaft Rear Bearing

Important

- The main shaft 5th gear needle bearing separates into two halves. Make note of the position and location of the main shaft 5th gear needle bearing to ensure correct assembly and operation.

7. Main shaft 5th gear washer, main shaft washer ball, main shaft 5th gear, high speed synchronizer ring and main shaft 5th gear needle bearing from main shaft.
8. Reverse synchronizer sleeve from reverse synchronizer hub.
9. Reverse synchronizer springs and three synchronizer keys from reverse synchronizer hub.
10. High speed and reverse hub C-clip from main shaft using the J 34757.

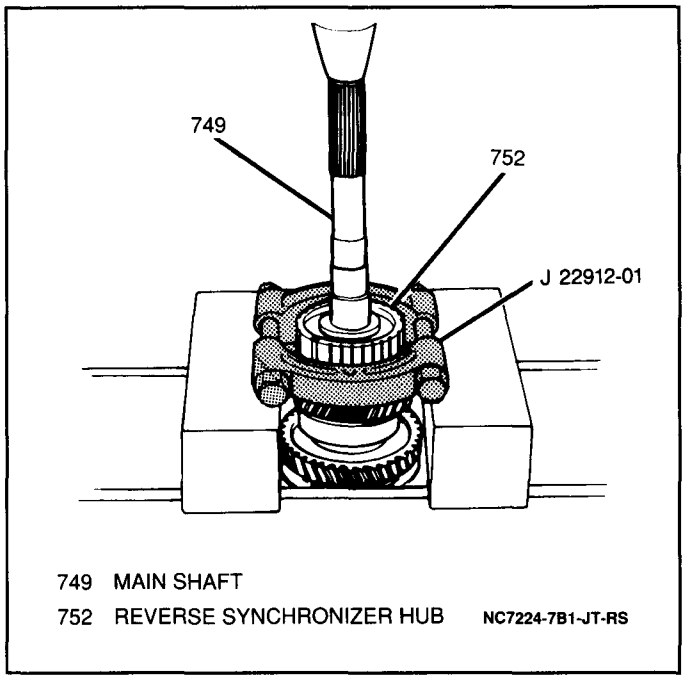

Figure 23 Removing Reverse Synchronizer Hub

11. Reverse synchronizer hub from main shaft using the J 22912-01 and a press arbor (Figure 23).
12. Main shaft reverse gear and needle bearing from main shaft.

NOTICE: DO NOT remove the main shaft bearing washer, main shaft reverse gear bushing and the main shaft center bearing in one step. The main shaft washer ball which locks the main shaft bearing washer in place could damage the main shaft or the main shaft center bearing. Remove the main shaft reverse gear bushing first, then, remove the main shaft bearing washer and main shaft washer ball before removing the bushing main shaft center bearing from the main shaft.

13. Main shaft reverse gear bushing, main shaft bearing washer and main shaft washer ball from the main shaft.
14. Main shaft center bearing from main shaft using the J 22912-01 and a press arbor.

    NOTICE: DO NOT remove the main shaft bearing washer, main shaft 1st gear, main shaft 1st gear needle bearing and low speed synchronizer ring in one step. The main shaft washer ball which locks the main shaft bearing washer in place could damage the main shaft or the main shaft 1st gear. Remove the main shaft bearing washer and main shaft washer ball first, then, remove the main shaft 1st gear, main shaft 1st gear needle bearing and low speed synchronizer ring.
15. Main shaft bearing washer and main shaft washer ball from main shaft.
16. Main shaft 1st gear, main shaft 1st gear needle bearing and low speed synchronizer ring from main shaft.
17. Main shaft 1st gear bushing, low speed sleeve and hub assembly, low speed synchronizer ring and main shaft 2nd gear from main shaft using the J 22912-01 and a press arbor (Figure 24).

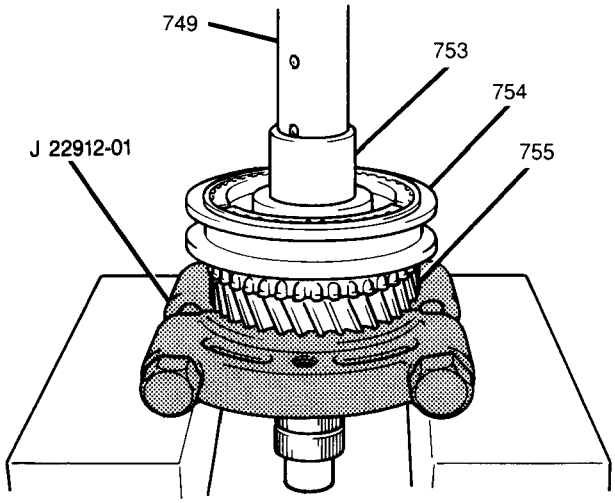

749 MAIN SHAFT
753 MAIN SHAFT 1ST GEAR BUSHING
754 LOW SPEED SLEEVE AND HUB ASSEMBLY
755 MAIN SHAFT 2ND GEAR
NC7225-7B1-JT-RS

Figure 24 Removing Low Speed Sleeve and Hub Assembly

18. Main shaft 2nd gear needle bearing from main shaft.
19. Low speed synchronizer sleeve from low speed synchronizer hub.
20. Low speed synchronizer springs and synchronizer keys from low speed synchronizer hub.

Clean

- All main shaft components thoroughly with solvent and air dry.

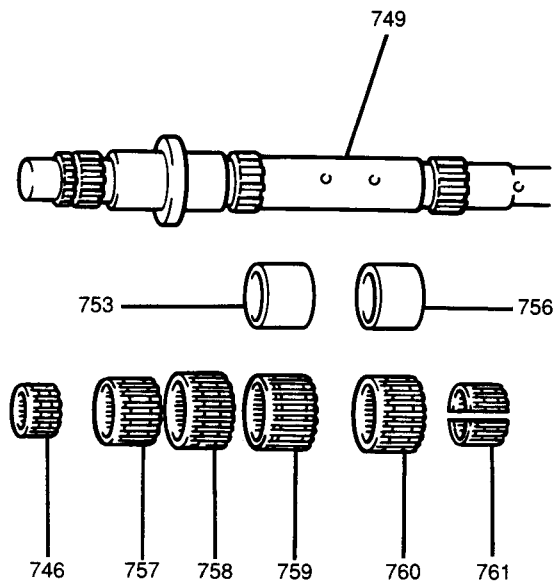

746 FRONT INPUT SHAFT NEEDLE BEARING
749 MAIN SHAFT
753 MAIN SHAFT 1ST GEARING BUSHING
756 MAIN SHAFT REVERSE GEAR BUSHING
757 MAIN SHAFT 3RD GEAR NEEDLE BEARING
758 MAIN SHAFT 2ND GEAR NEEDLE BEARING
759 MAIN SHAFT 1ST GEAR NEEDLE BEARING
760 MAIN SHAFT REVERSE GEAR NEEDLE BEARING
761 MAIN SHAFT 5TH GEAR NEEDLE BEARING
NC7225-7B2-JT-RS

Figure 25 Inspecting Main Shaft, Needle Bearings and Bushings

Inspect

1. All needle bearings for unusual wear or damage. Replace as necessary (Figure 25).
2. All ball bearings for roughness or wear. Replace as necessary.
3. Chamfered portion of each synchronizer ring for excessive wear. Replace as necessary.
4. All synchronizer springs and keys for distortion or damage. Replace as necessary.
5. Main shaft for grooves, scoring or unusual wear. Replace as necessary (Figure 25).

Measure

Tool Required:
J 26900-7 Dial Caliper

1. Clearance between each synchronizer ring and its respective gear using a feeler gage. Maximum synchronizer ring clearance is 1.0 to 1.4 mm (0.039 to 0.055-inch). If synchronizer ring clearance exceeds specification, replace the synchronizer ring and gear (Figure 26).

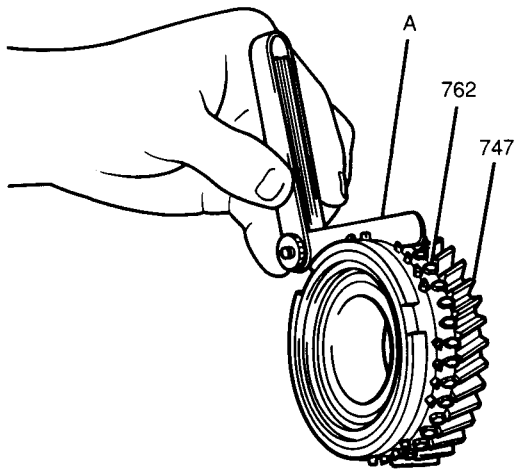

A FEELER GAGE
762 HIGH SPEED SYNCHRONIZER RING
747 MAIN SHAFT 3RD GEAR
NC7227-7B1-JT-RS

Figure 26 Measuring Synchronizer Ring Clearance

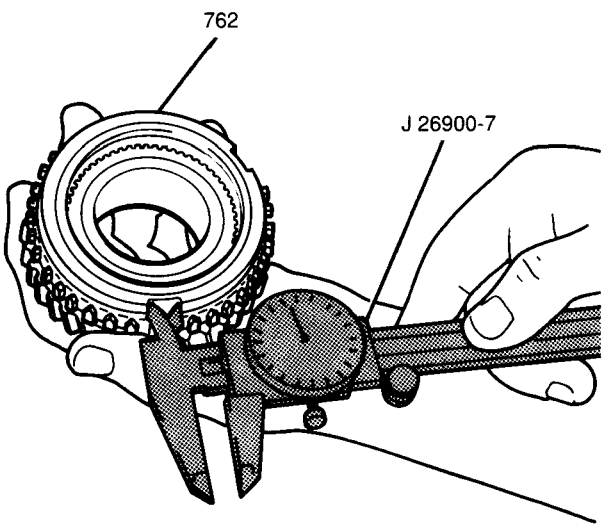

762 HIGH SPEED SYNCHRONIZER RING NC7228-7B1-JT-RS

Figure 27 Measuring Synchronizer Key Slot Width

2. Key slot width of each synchronizer ring using a J 26900-7. Maximum synchronizer key slot width is 10.1 to 10.4 mm (0.397 to 0.409-inch). If synchronizer ring key slot width exceeds specification, replace the synchronizer ring (Figure 27).
3. Clearance between each gearshift fork and its respective synchronizer sleeve using a feeler gage. Maximum gearshift fork clearance is 1.0 mm (0.039-inch). If gearshift fork clearance exceeds specification, replace the gearshift fork and synchronizer sleeve (Figure 28).

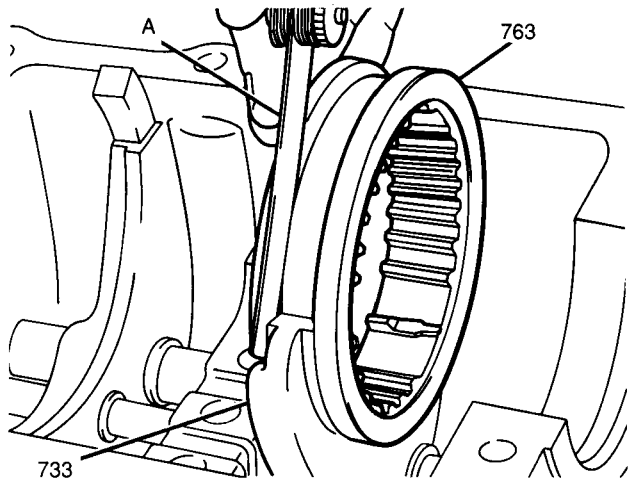

A FEELER GAGE
733 HIGH SPEED GEARSHIFT FORK
763 HIGH SPEED SYNCHRONIZER SLEEVE
NC7229-7B1-JT-RS

Figure 28 Measuring Gearshift Fork-to-Synchronizer Sleeve Clearance

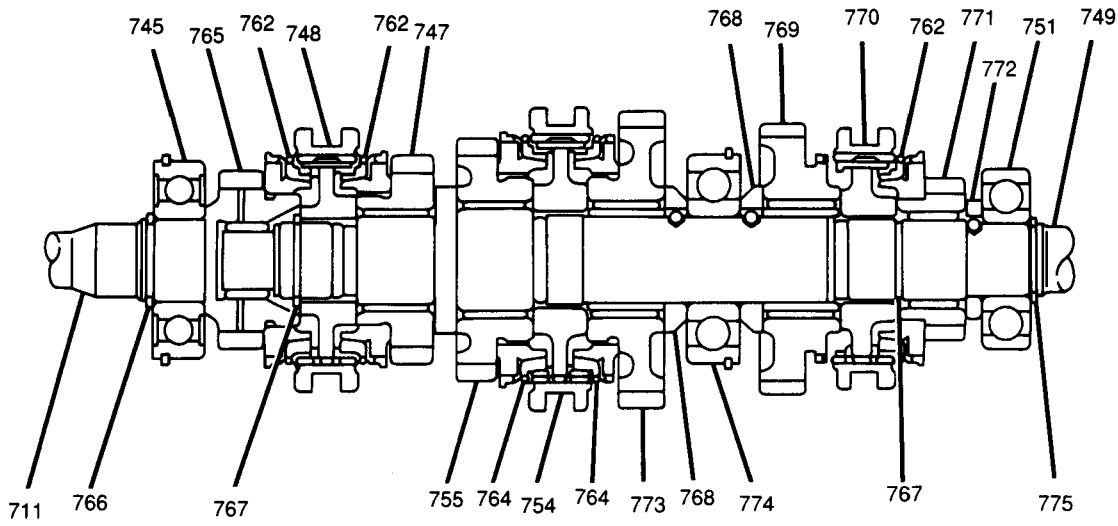

711 INPUT SHAFT
745 FRONT INPUT SHAFT BEARING
747 MAIN SHAFT 3RD GEAR
748 HIGH SPEED SLEEVE AND HUB ASSEMBLY
749 MAIN SHAFT
751 MAIN SHAFT REAR BEARING
754 LOW SPEED SLEEVE AND HUB ASSEMBLY
755 MAIN SHAFT 2ND GEAR
762 HIGH SPEED SYNCHRONIZER RING
764 LOW SPEED SYNCHRONIZER RING
765 INPUT SHAFT 4TH GEAR
766 FRONT INPUT SHAFT BEARING C-CLIP
767 HIGH SPEED AND REVERSE HUB C-CLIP
768 MAIN SHAFT BEARING WASHER
769 MAIN SHAFT REVERSE GEAR
770 REVERSE SLEEVE AND HUB ASSEMBLY
771 MAIN SHAFT 5TH GEAR
772 MAIN SHAFT 5TH GEAR WASHER
773 MAIN SHAFT 1ST GEAR
774 MAIN SHAFT CENTER BEARING
775 MAIN SHAFT REAR BEARING C-CLIP

NC7229-7B2-JT-RS

Figure 29 Main Shaft Assembly

Install or Connect

Tools Required:
- J 37753 Bearing Installer
- J 35664 Bearing Installer
- J 28406 Bearing Installer
- J 22912-01 Split Plate
- J 35425 High Speed Hub Installer
- J 36850 Transjel® Transmission Assembly Lubricant

1. Low speed synchronizer springs and synchronizer keys onto low speed synchronizer hub (Figure 31).

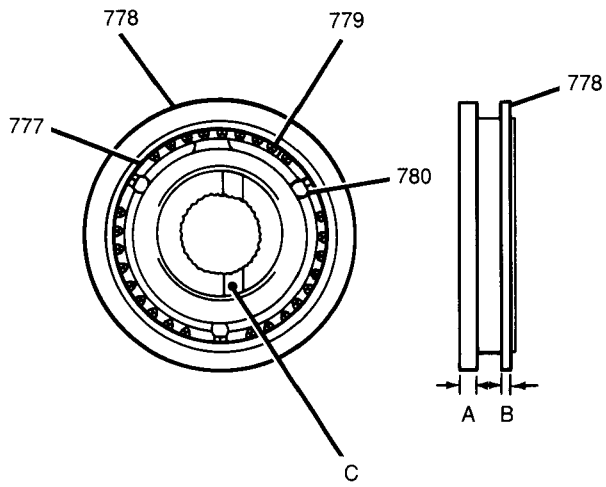

A THICK SIDE (TOWARD 2ND GEAR)
B THIN SIDE (TOWARD 1ST GEAR)
C PUNCH MARK (TOWARD 1ST GEAR)
777 LOW SPEED SYNCHRONIZER HUB
778 LOW SPEED SYNCHRONIZER SLEEVE
779 LOW SPEED SYNCHRONIZER SPRING
780 SYNCHRONIZER KEY

NC7231-7B1-JT-RS

Figure 30 Low Speed Sleeve and Hub Assembly

2. Low speed synchronizer sleeve onto low speed synchronizer hub (Figure 30).
- Apply J 36850 to the main shaft 2nd gear needle bearing.
3. Main shaft 2nd gear needle bearing, main shaft 2nd gear and low speed synchronizer ring onto main shaft (Figure 31).

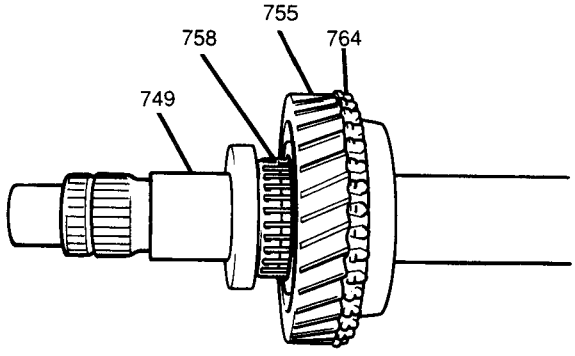

749 MAIN SHAFT
755 MAIN SHAFT 2ND GEAR
758 MAIN SHAFT 2ND GEAR NEEDLE BEARING
764 LOW SPEED SYNCHRONIZER RING

NC7232-7B1-JT-RS

Figure 31 Installing Main Shaft 2nd Gear

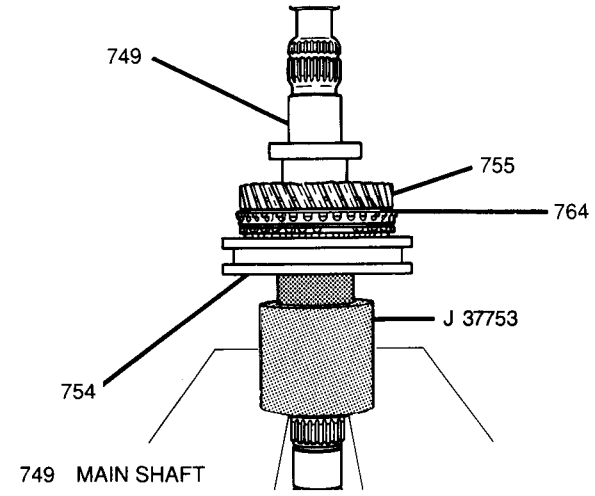

749 MAIN SHAFT
754 LOW SPEED SLEEVE AND HUB ASSEMBLY
755 MAIN SHAFT 2ND GEAR
764 LOW SPEED SYNCHRONIZER RING

NC7233-7B1-JT-RS

Figure 32 Installing Low Speed Sleeve and Hub Assembly

4. Low speed sleeve and hub assembly onto main shaft using a J 37753 and a press arbor (Figure 32).
5. Main shaft 1st gear bushing onto main shaft using the J 37753 and a press arbor (Figure 33).

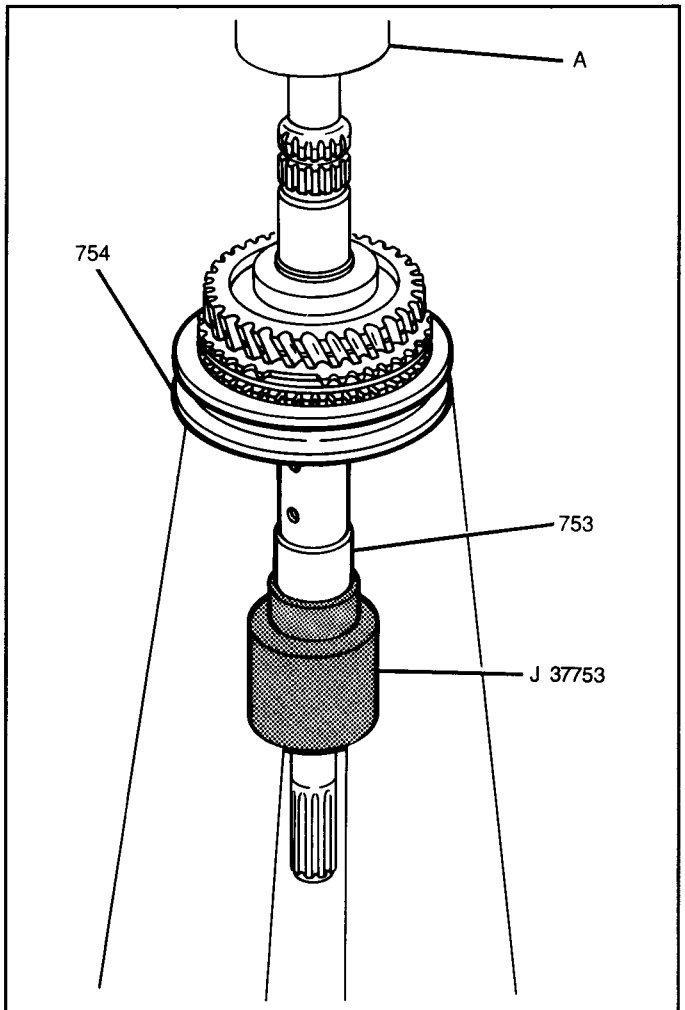

A PRESS ARBOR
753 MAIN SHAFT 1ST GEAR BUSHING
754 LOW SPEED SLEEVE AND HUB ASSEMBLY
NC7234-7B1-JT-RS

Figure 33 Installing Main Shaft 1st Gear Bushing

- Apply J 36850 to the main shaft 1st gear needle bearing.

6. Main shaft 1st gear needle bearing, low speed synchronizer ring and main shaft 1st gear onto main shaft.
7. Main shaft washer ball and main shaft bearing washer onto main shaft (Figure 34).

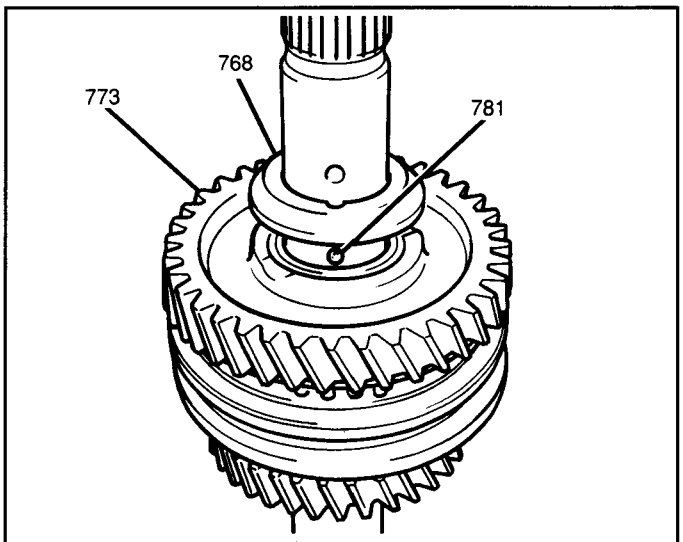

768 MAIN SHAFT BEARING WASHER
773 MAIN SHAFT 1ST GEAR
781 MAIN SHAFT WASHER BALL
NC7235-7B1-JT-RS

Figure 34 Installing Main Shaft Bearing Washer

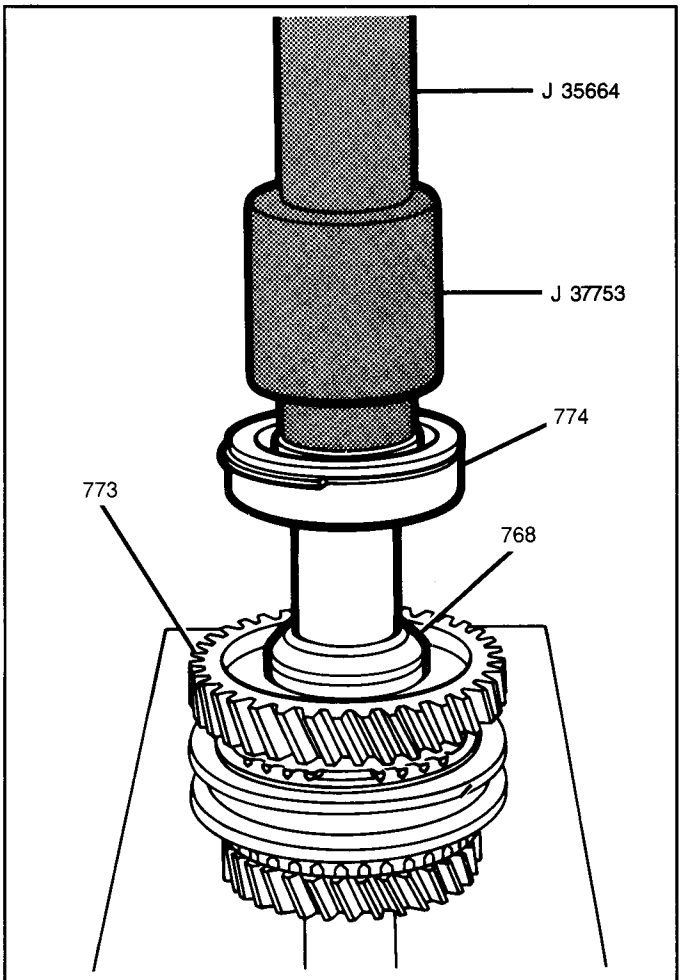

773 MAIN SHAFT 1ST GEAR
774 MAIN SHAFT CENTER BEARING
768 MAIN SHAFT BEARING WASHER

NC7236-7B1-JT-RS

Figure 35 Installing Main Shaft Center Bearing

8. Main shaft center bearing onto main shaft using the J 37753 with a J 35664 and a press arbor (Figure 35).
9. Reverse synchronizer springs and three synchronizer keys to reverse synchronizer hub. The thick side of the synchronizer keys and synchronizer sleeve should face toward the main shaft 5th gear (Figure 36).

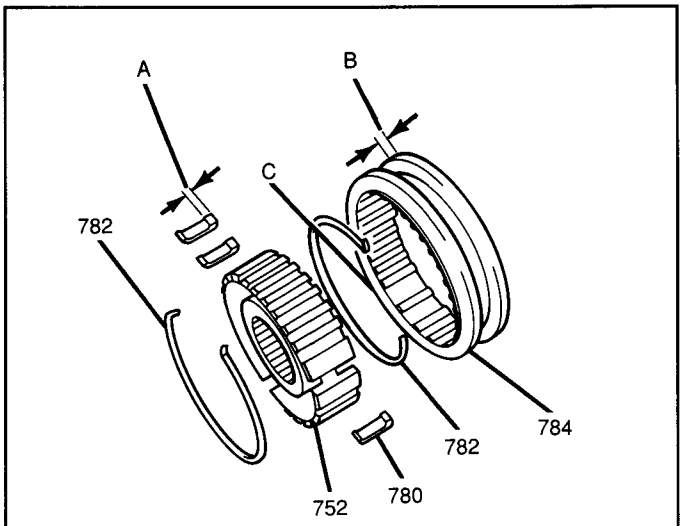

A THICK SIDE OF KEY (TOWARD 5TH GEAR)
B THICK SIDE OF SLEEVE (TOWARD 5TH GEAR)
C SYNCHRONIZER KEY SLOT
752 REVERSE SYNCHRONIZER HUB
780 SYNCHRONIZER KEY
782 HIGH SPEED SYNCHRONIZER SPRING
784 REVERSE SYNCHRONIZER SLEEVE

NC7237-7B1-JT-RS

Figure 36 Reverse Sleeve and Hub Assembly

10. Reverse synchronizer sleeve to reverse synchronizer hub (Figure 36).
11. Main shaft washer ball and main shaft bearing washer to main shaft.
12. Main shaft reverse gear bushing onto main shaft using the J 37753 with the J 35664 and gently tapping into place (Figure 37).

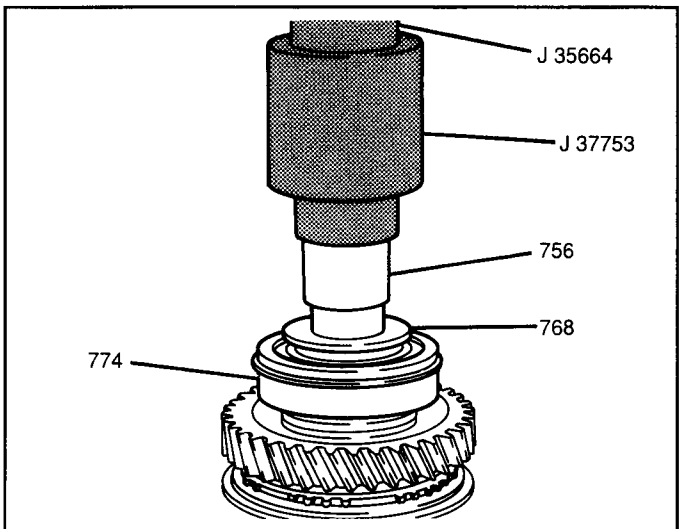

756 MAIN SHAFT REVERSE GEAR BUSHING
768 MAIN SHAFT BEARING WASHER
774 MAIN SHAFT CENTER BEARING

NC7238-7B1-JT-RS

Figure 37 Installing Main Shaft Reverse Gear Bushing

- Apply J 36850 to the main shaft reverse gear needle bearing.

13. Main shaft reverse gear needle bearing and main shaft reverse gear onto main shaft.
14. Reverse sleeve and hub assembly onto main shaft using the J 37753 with the J 35664 and gently tapping into place (Figure 38).

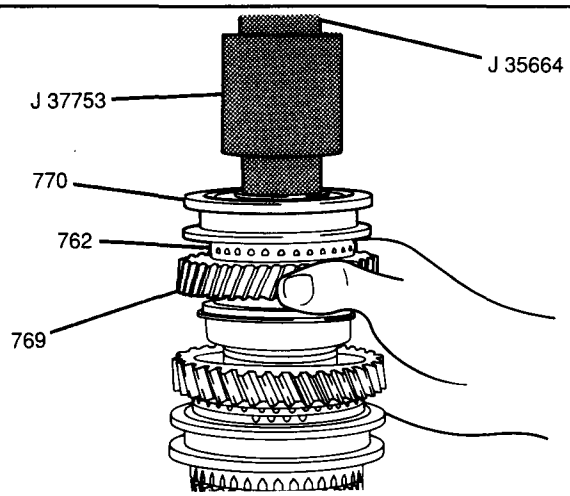

762 HIGH SPEED SYNCHRONIZER RING
769 MAIN SHAFT REVERSE GEAR
770 REVERSE SLEEVE AND HUB ASSEMBLY
NC7239-7B1-JT-RS

Figure 38 Installing Reverse Sleeve and Hub Assembly

15. High speed and reverse hub C-clip onto main shaft.
- Apply J 36850 to both halves of the main shaft 5th gear needle bearing.

16. High speed synchronizer ring, main shaft 5th gear needle bearing, main shaft 5th gear, main shaft washer ball and main shaft 5th gear washer onto main shaft with oil slot in the main shaft 5th gear washer facing the main shaft 5th gear.

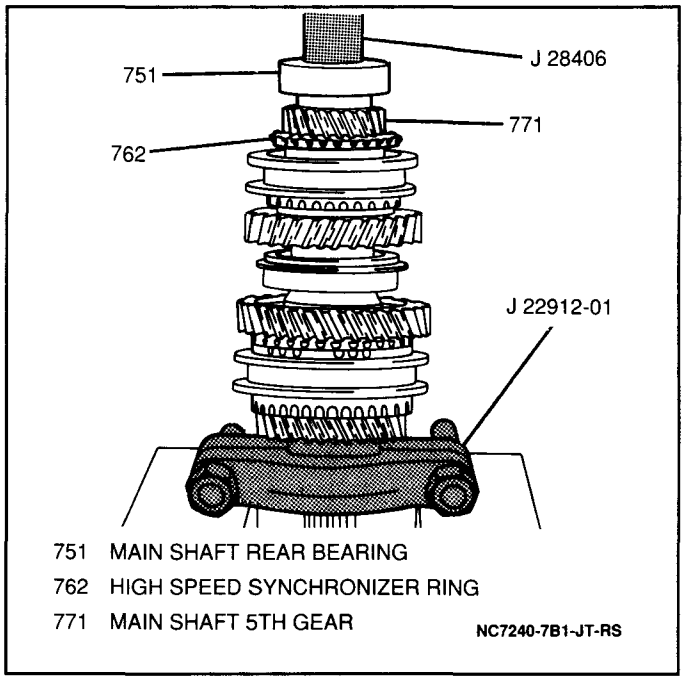

751 MAIN SHAFT REAR BEARING
762 HIGH SPEED SYNCHRONIZER RING
771 MAIN SHAFT 5TH GEAR
NC7240-7B1-JT-RS

Figure 39 Installing Main Shaft Rear Bearing

17. Main shaft rear bearing onto main shaft using a J 22912-01 for support, a J 28406 and a press arbor (Figure 39).
18. Main shaft rear bearing C-clip onto main shaft.

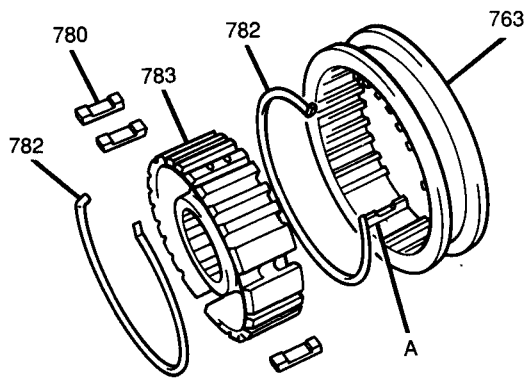

A SYNCHRONIZER KEY SLOT
763 HIGH SPEED SYNCHRONIZER SLEEVE
780 SYNCHRONIZER KEY
782 HIGH SPEED SYNCHRONIZER SPRING
783 HIGH SPEED SYNCHRONIZER HUB

NC7242-7B1-JT-RS

Figure 40 Assembling High Speed Sleeve and Hub

19. High speed synchronizer springs and three synchronizer keys onto high speed synchronizer hub (Figure 40).
20. High speed synchronizer sleeve onto high speed synchronizer hub.
- Apply J 36850 to the main shaft 3rd gear needle bearing.
21. Main shaft 3rd gear needle bearing, main shaft 3rd gear, high speed synchronizer rings and high speed sleeve and hub assembly onto main shaft using the J 22912-01 for support, a J 35425 and a press arbor (Figure 41).

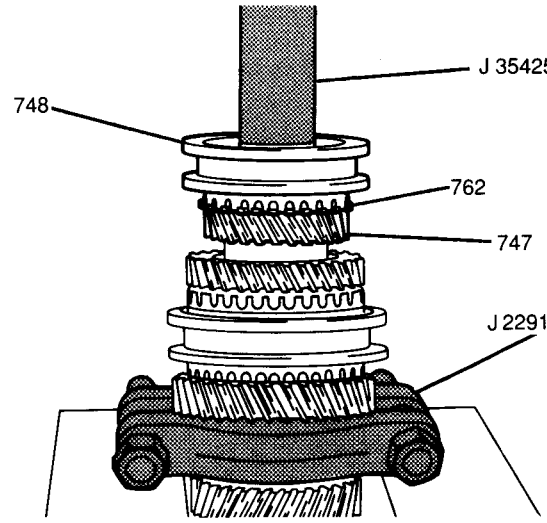

747 MAIN SHAFT 3RD GEAR
748 HIGH SPEED SLEEVE AND HUB ASSEMBLY
762 HIGH SPEED SYNCHRONIZER RING

NC7243-7B1-JT-RS

Figure 41 Installing High Speed Sleeve and Hub Assembly

22. High speed and reverse hub C-clip onto main shaft.

Upper Case, Gearshift Shafts and Gearshift Forks

Figures 28 and 42 through 52

Remove or Disconnect

1. Backup lamp switch from upper case (Figure 42).

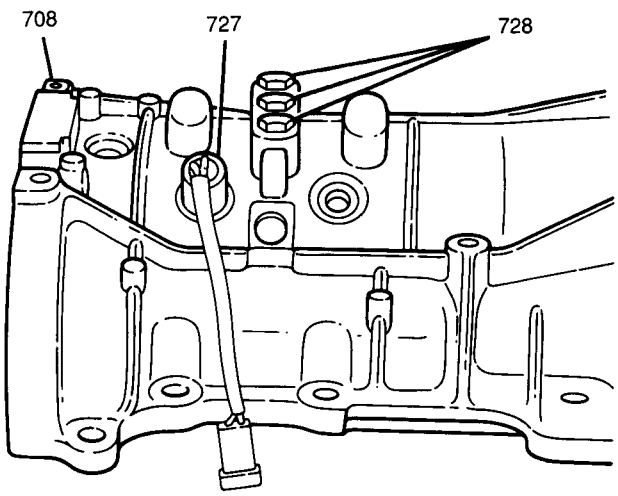

708 UPPER CASE
727 BACKUP LAMP SWITCH
728 LOCATING SPRING BOLTS

NC7244-7B1-JT-RS

Figure 42 Backup Lamp Switch and Locating Spring Bolts

2. Three locating spring bolts, three set washers, three locating springs and three locating balls from upper case (Figure 42).

Important

- When removing any gearshift shaft, the interlock system will prevent gearshift shaft removal unless the other two gearshift shafts are in the neutral position.

- Place all three gearshift shafts in the neutral position.

3. Low speed gearshift fork roll pin, low speed gearshift fork and low speed gearshift shaft from upper case (Figure 43).

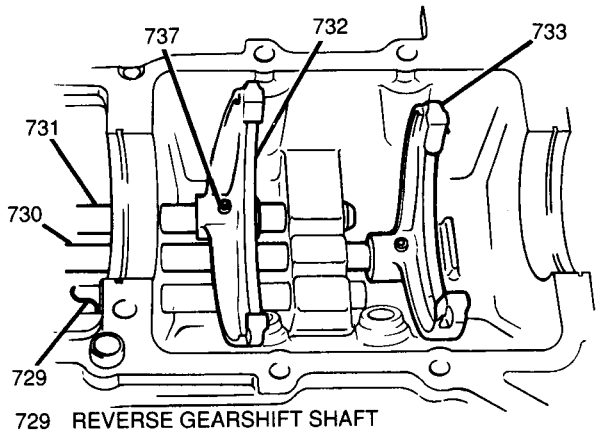

729 REVERSE GEARSHIFT SHAFT
730 HIGH SPEED GEARSHIFT SHAFT
731 LOW SPEED GEARSHIFT SHAFT
732 LOW SPEED GEARSHIFT FORK
733 HIGH SPEED GEARSHIFT FORK
737 LOW SPEED GEARSHIFT FORK ROLL PIN

NC7246-7B1-JT-RS

Figure 43 Removing Gearshift Shafts

4. High speed gearshift fork roll pin, high speed gearshift fork and high speed gearshift shaft from upper case (Figure 43).
5. Reverse gearshift shaft from upper case (Figure 43).
6. Reverse gearshift fork roll pin and reverse gearshift fork from reverse gearshift shaft.
7. Two rubber plugs and two interlock balls from upper case.
8. Interlock pin from high speed gearshift shaft.

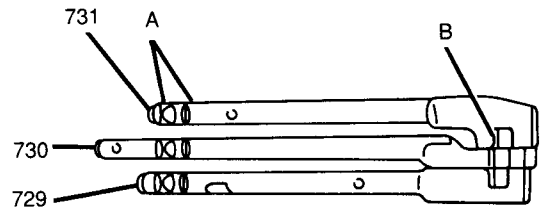

A LOCATING GROOVE
B GEARSHIFT LEVER GROOVE
729 REVERSE GEARSHIFT SHAFT
730 HIGH SPEED GEARSHIFT SHAFT
731 LOW SPEED GEARSHIFT SHAFT

NC7247-7B1-JT-RS

Figure 44 Inspecting Gearshift Shafts

Inspect

- Gearshift shafts for wear. Pay particular attention to the locating and gearshift lever grooves in the gearshift shafts (Figure 44). Replace any gearshift shaft that exhibits excessive wear or damage. Insert each gearshift shaft into upper case and check for smooth operation while working back and forth. If any gearshift shaft binds, correct by carefully sanding contact surfaces with emery cloth.

Measure

Tool Required:
J 26900-7 Dial Caliper

1. Gearshift fork-to-synchronizer sleeve clearance using a feeler gage (Figure 28). If clearance exceeds 1.0 mm (0.039-inch), replace the gearshift fork and synchronizer sleeve as necessary.
2. Locating spring length using a J 26900-7 (Figure 45). Standard locating spring length is 24.0 to 27.0 mm (0.945 to 1.063-inch). If a spring is less than 24.0 mm (0.945-inch), replace it.

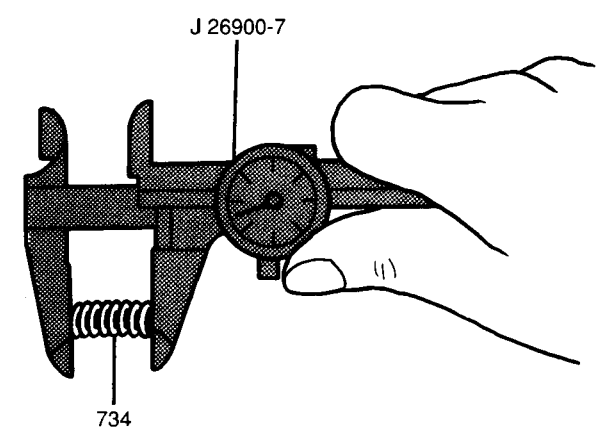

734 LOCATING SPRING

NC7248-7B1-JT-RS

Figure 45 Measuring Locating Spring Length

Install or Connect

Important

- The reverse gearshift fork roll pin is 5 mm (0.187-inch) longer than the low speed and high speed gearshift fork roll pins (Figure 46). The clearance between the low speed and high speed gearshift forks and the upper case is not sufficient for the removal of a roll pin longer than 25 mm (0.98-inch). If the reverse gear shift fork roll pin is installed in the low speed or high speed gearshift fork, the reverse gearshift fork roll pin will contact the upper case during any future disassembly. This may inhibit transmission operation as well as making any gearshift fork removal impossible.

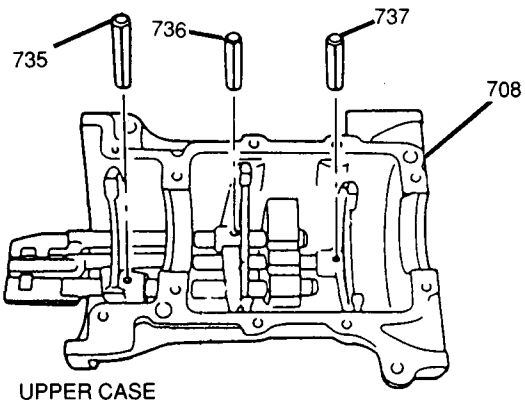

708 UPPER CASE
735 REVERSE GEARSHIFT FORK ROLL PIN (30 mm, 1.18")
736 HIGH SPEED GEARSHIFT FORK ROLL PIN (25 mm, 0.98")
737 LOW SPEED GEARSHIFT FORK ROLL PIN (25 mm, 0.98")

NC7249-7B1-JT-RS

Figure 46 Gearshift Fork Roll Pin Size and Installation

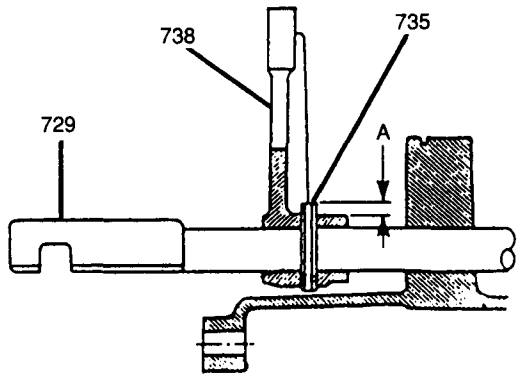

A 3.5–4.5 mm (0.138 – 0.177")
729 REVERSE GEARSHIFT SHAFT
735 REVERSE GEARSHIFT FORK ROLL PIN
738 REVERSE GEARSHIFT FORK

NC7250-7B1-JT-RS

Figure 47 Reverse Gearshift Roll Pin Installation

1. Reverse gearshift fork to reverse gearshift shaft; secure with reverse gearshift fork roll pin (Figure 47).

Important

- When installing the reverse gearshift fork roll pin, DO NOT press the roll pin in until it is flush with the gearshift fork. Allow a 3.5 to 4.5 mm (0.138 to 0.177-inch) protrusion above the reverse gearshift fork (Figure 47).

2. Reverse gearshift shaft and interlock ball into upper case (Figure 48).

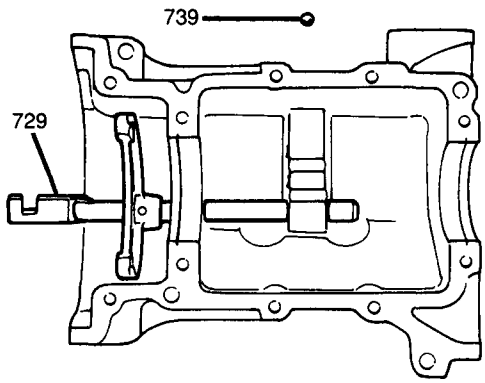

729 REVERSE GEARSHIFT SHAFT
739 INTERLOCK BALL

NC7122-7B1-JT-RS

Figure 48 Reverse Gearshift Shaft and Interlock Ball

- Place the reverse gearshift shaft into the neutral position.
- Fit interlock pin into the high speed gearshift shaft.

3. High speed gearshift shaft into upper case with high speed gearshift fork; secure with high speed gearshift fork roll pin (Figure 49).

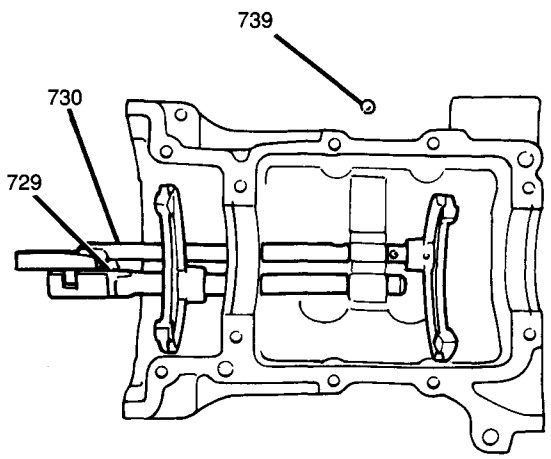

729 REVERSE GEARSHIFT SHAFT
730 HIGH SPEED GEARSHIFT SHAFT
739 INTERLOCK BALL
NC7123-7B1-JT-RS

Figure 49 High Speed Gearshift Shaft and Interlock Ball

4. Interlock ball into upper case (Figure 49).

- Place the high speed gearshift shaft into the neutral position.

5. Low speed gearshift shaft into upper case with low speed gearshift fork; secure with low speed gearshift fork roll pin.

- Apply RTV silicone sealer GM P/N 1052917, or equivalent, to the two rubber plugs (Figure 50).

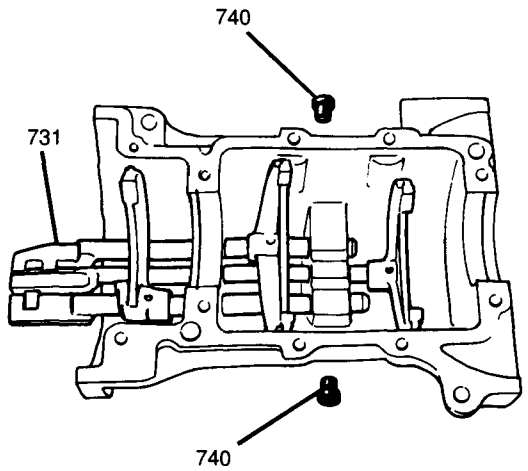

731 LOW SPEED GEARSHIFT SHAFT
740 RUBBER PLUG
NC7124-7B1-JT-RS

Figure 50 Installing Rubber Plugs

6. Two rubber plugs into upper case (Figure 50).

Inspect

- Interlock system operation (Figure 51). In 1st or 2nd gear position, a 3rd-to-4th or 5th-to-reverse gearshift should not be possible. In reverse gear position, a 1st-to-2nd or 3rd-to-4th gearshift should not be possible.

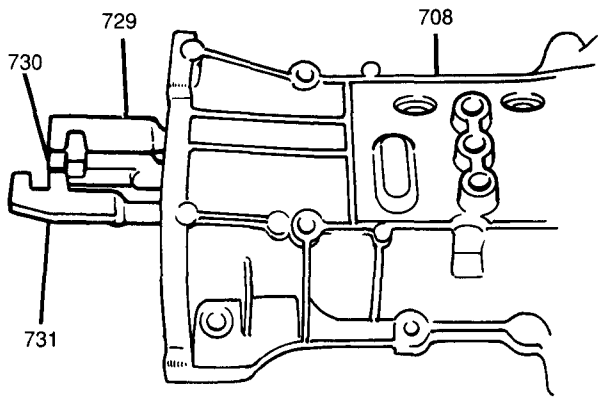

708 UPPER CASE
729 REVERSE GEARSHIFT SHAFT (NEUTRAL POSITION)
730 HIGH SPEED GEARSHIFT SHAFT (NEUTRAL POSITION)
731 LOW SPEED GEARSHIFT SHAFT (1ST GEAR POSITION)
NC7254-7B1-JT-RS

Figure 51 Inspecting Interlock System

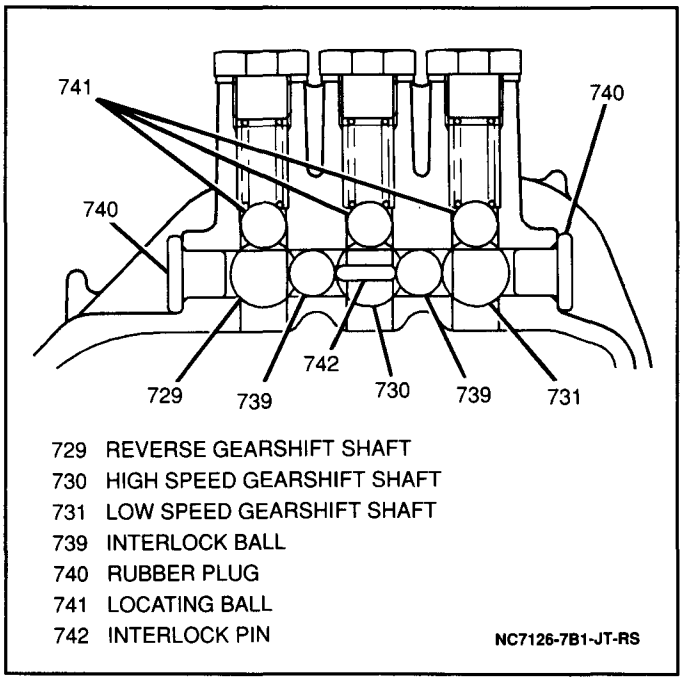

Figure 52 Interlock System Assembly

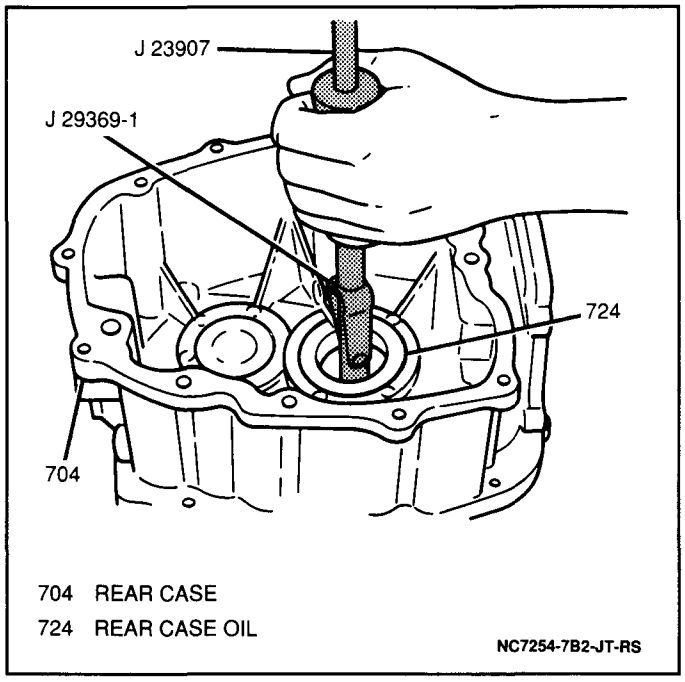

Figure 53 Removing Rear Case Oil Seal

7. Three locating balls, three locating springs, three set washers and three locating spring bolts into upper case (Figure 52).

Tighten

- Locating spring bolts to 28 N·m (21 lb.ft.).

8. Backup lamp switch into upper case (Figure 42).

Tighten

- Backup lamp switch to 20 N·m (15 lb.ft.).

Rear Case

Figures 53 through 56

Remove or Disconnect

Tools Required:
J 23907 Slide Hammer
J 29369-1 Output Shaft Bearing Remover
J 35664 Bearing Installer

1. Rear case oil seal from rear case using a J 29369-1 with a J 23907 (Figure 53).

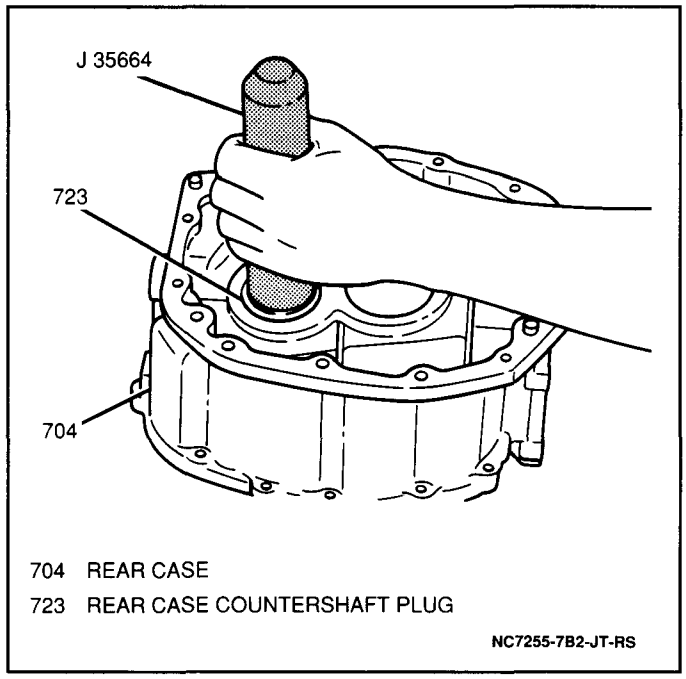

Figure 54 Removing Rear Case Countershaft Plug

2. Rear case countershaft plug from rear case using a J 35664 and a hammer (Figure 54).

Clean

- Rear case mating surface.

Inspect

- Rear case for cracks or porosity. Replace as necessary.

Install or Connect

Tools Required:
- J 37750 Oil Seal Installer
- J 37758 Countershaft Rear Plug Installer
- J 8092 Driver Handle
- J 36850 Transjel® Transmission Assembly Lubricant

1. Rear case countershaft plug into rear case using a J 37758 with a J 8092 and a hammer (Figure 55).

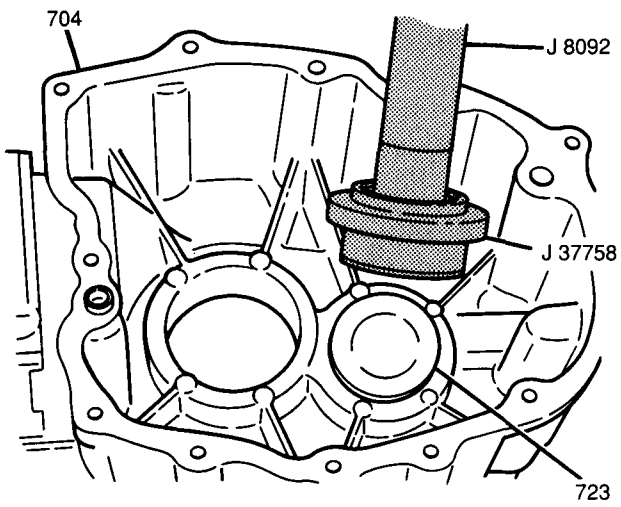

704 REAR CASE
723 REAR CASE COUNTERSHAFT PLUG
NC7256-7B2-JT-RS

Figure 55 Installing Rear Case Countershaft Plug

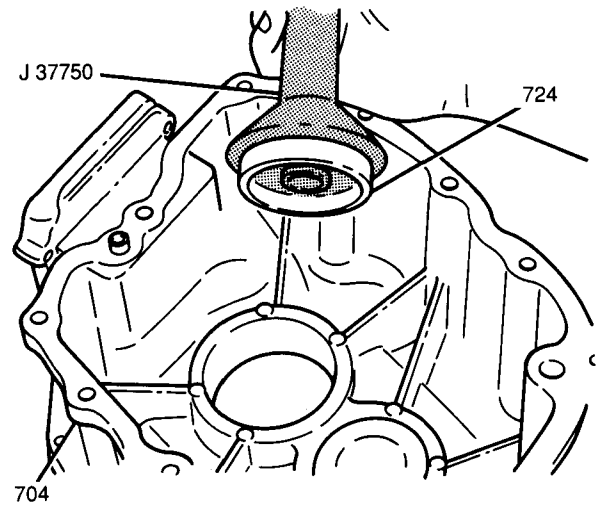

704 REAR CASE
724 REAR CASE OIL SEAL
NC7257-7B2-JT-RS

Figure 56 Installing Rear Case Oil Seal

2. New rear case oil seal into rear case using a J 37750 and a hammer (Figure 56).
- Apply J 36850 to the new rear case oil seal lip.

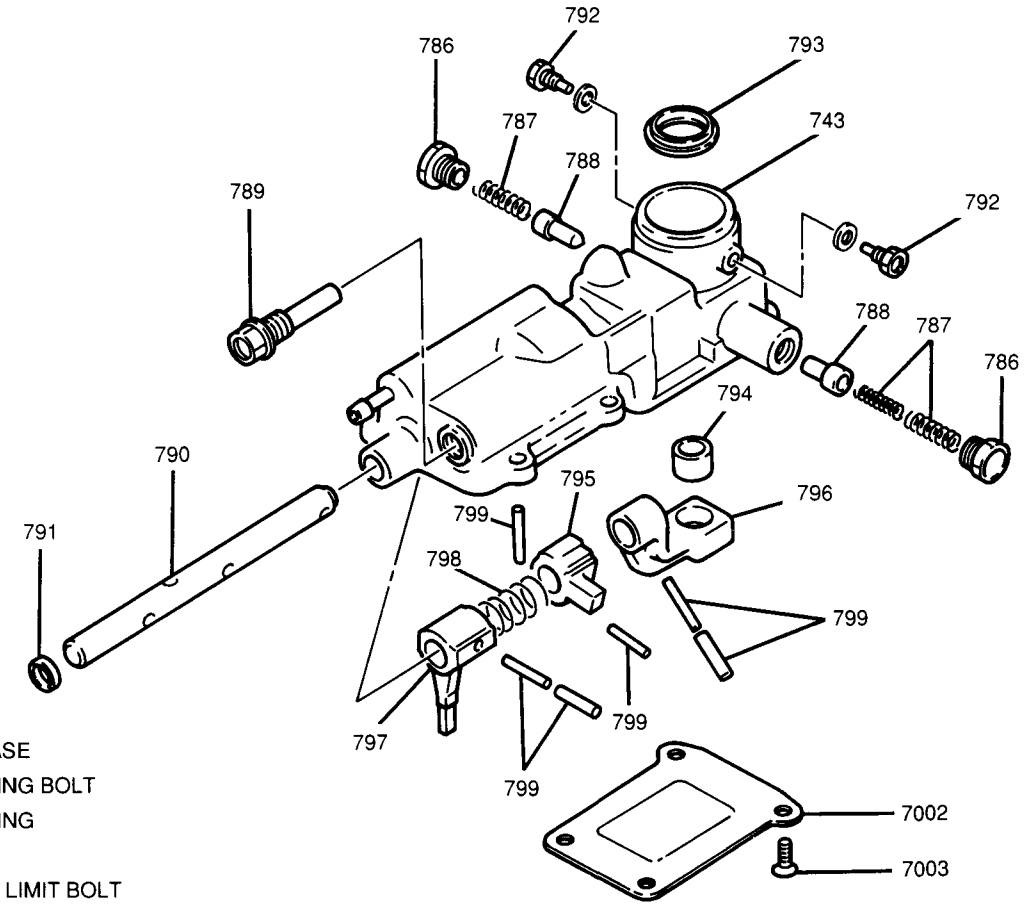

743 GEARSHIFT LEVER CASE
786 SELECT RETURN SPRING BOLT
787 SELECT RETURN SPRING
788 SELECT GUIDE PIN
789 REVERSE GEARSHIFT LIMIT BOLT
790 GEARSHIFT SHAFT
791 GEARSHIFT LEVER CASE PLUG
792 LEVER LOCATING BOLT
793 GEARSHIFT LEVER CASE SEAT
794 GEARSHIFT CONTROL LEVER BUSHING
795 REVERSE GEARSHIFT LIMIT YOKE
796 GEARSHIFT ARM
797 GEARSHIFT LEVER
798 GEARSHIFT LIMIT SPRING
799 ROLL PIN
7002 GEARSHIFT LEVER CASE PLATE
7003 GEARSHIFT LEVER CASE PLATE SCREW

NC7258-7B2-JT-RS

Figure 57 Gearshift Lever Case Components

Gearshift Lever Case

Figures 57 through 62

Remove or Disconnect

1. Four screws and gearshift lever case plate from bottom of gearshift lever case (Figure 58).

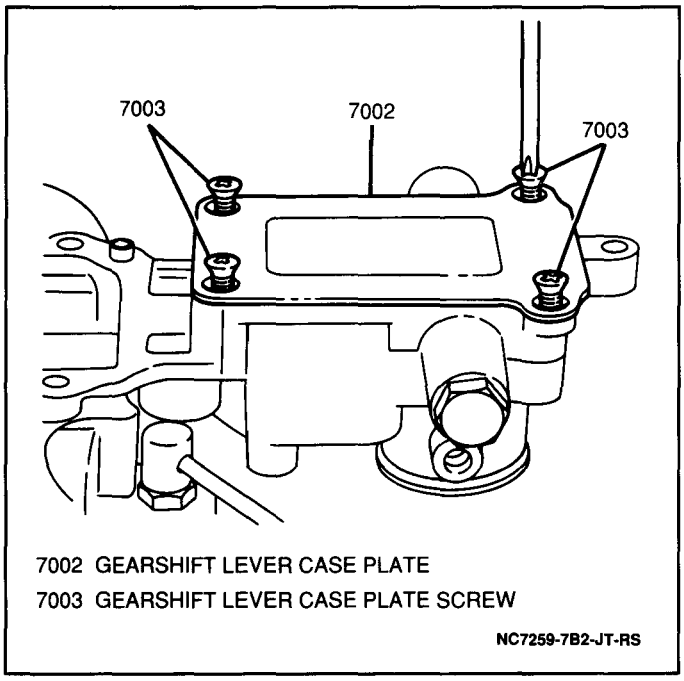

Figure 58 Removing Gearshift Lever Case Plate

2. One inner and outer roll pin and gearshift arm from gearshift shaft (Figure 57).
3. Gearshift control lever bushing from gearshift arm (Figure 57).
4. One roll pin from gearshift shaft releasing tension on gearshift limit spring (Figure 59).

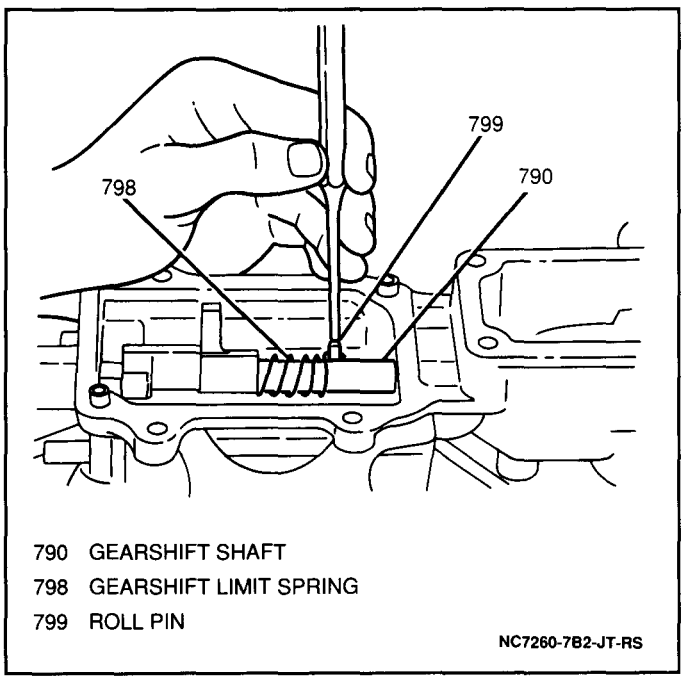

Figure 59 Removing Roll Pin From Gearshift Limit Spring

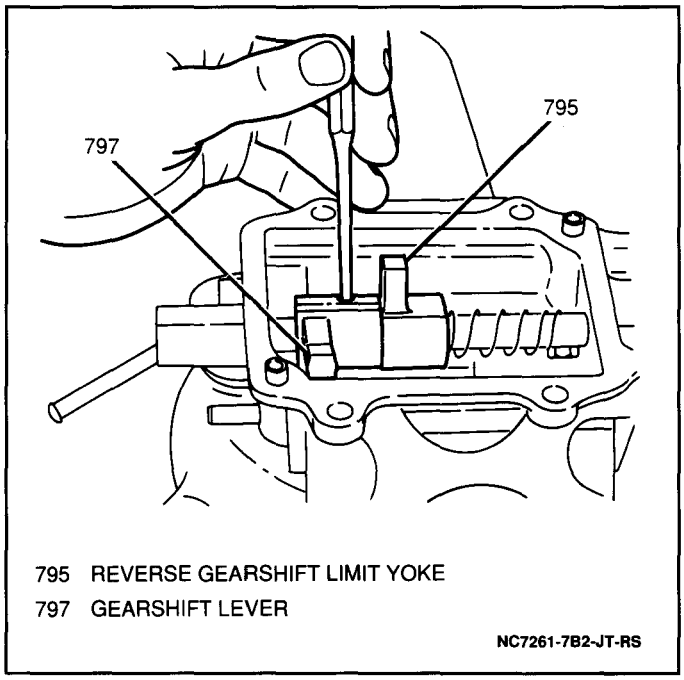

Figure 60 Removing Roll Pin From Gearshift Lever

5. One inner and outer roll pin from gearshift lever (Figure 60).
6. One roll pin from reverse gearshift limit yoke (Figure 60).
- Unstake gearshift lever case plug.
7. Gearshift lever case plug from gearshift lever case (Figure 61).

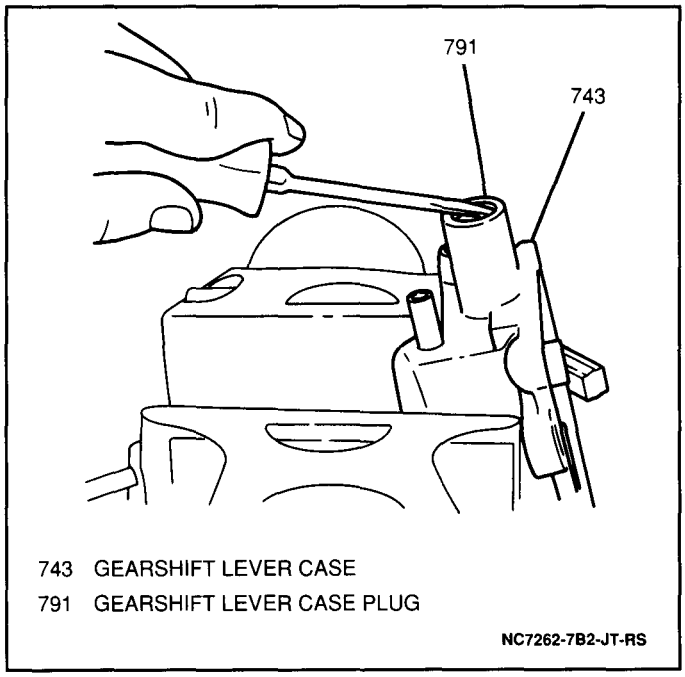

Figure 61 Removing Gearshift Lever Case Plug

8. Gearshift shaft from gearshift lever case while simultaneously removing the gearshift lever, reverse gearshift limit yoke, and gearshift limit spring from the gearshift shaft (Figure 57).
9. Reverse gearshift limit bolt from gearshift lever case (Figure 57).

Important

- The gearshift lever case contains an inner and outer select return spring on the left side only. The right side contains a single select return spring. Note the location of these springs to ensure correct assembly.

10. Two select return spring bolts, three select return springs and two select guide pins from gearshift lever case (Figure 57).
11. Two lever locating bolts and two washers from gearshift lever case (Figure 57).
12. Gearshift lever case seat from gearshift lever case (Figure 57).

Clean

1. Gearshift lever case mating surfaces.
2. All gearshift lever case components thoroughly with solvent and air dry.

Inspect

1. Gearshift shaft by inserting into gearshift lever case and working back and forth while feeling for any binding. If gearshift shaft does not move freely in and out of the gearshift lever case, replace the gearshift lever case and gearshift shaft.
2. Gearshift lever, reverse gearshift limit yoke and gearshift arm for smooth fit and movement on the gearshift shaft. If any of the above components bind on the gearshift shaft, replace the gearshift shaft, gearshift lever, reverse gearshift limit yoke and gearshift arm.
3. Gearshift limit spring for weakness or distortion. Replace as necessary.
4. Gearshift control lever bushing for excessive wear. Replace as necessary.
5. Gearshift lever case seat for excessive wear. Replace as necessary.

Install or Connect

Tool Required:
J 36850 Transjel® Transmission Assembly Lubricant

- Apply a thin coat of J 36850 to all components prior to assembly.

1. Gearshift lever case seat into gearshift lever case.
2. Two lever locating bolts and washers into gearshift lever case (Figure 59).

Tighten

- Lever locating bolts to 20 N·m (15 lb.ft.).

3. Two select guide pins, three select return springs and two select return spring bolts into gearshift lever case (Figure 58).

Tighten

- Select return spring bolts to 32 N·m (24 lb.ft.).

- Apply Loctite® 414 GM P/N 12345093, or equivalent, to the threaded portion of the reverse gearshift limit bolt.

4. Reverse gearshift limit bolt into gearshift lever case (Figure 57).

Tighten

- Reverse gearshift limit bolt to 35 N·m (26 lb.ft.).

Important

- The portion of the gearshift shaft which has been machined flat must be facing downward toward the inside of the gearshift lever case for correct installation.

5. Gearshift shaft into gearshift lever case while simultaneously installing the gearshift lever, reverse gearshift limit yoke and gearshift limit spring onto the gearshift shaft (Figure 57).
6. Gearshift lever case plug into gearshift lever case.

- Stake gearshift lever case plug in two places.

7. One roll pin into reverse gearshift limit yoke.
8. One inner and outer roll pin into gearshift lever (Figure 60).
9. One roll pin into gearshift shaft to retain tension on gearshift limit spring (Figure 59).
10. Gearshift control lever bushing into gearshift arm.
11. One inner and outer roll pin into gearshift arm and gearshift shaft.

- Attach the hooked end of the gearshift limit spring around the roll pin shown in Figure 59. Then, wind the gearshift limit spring until the straight end can be fitted into the groove on the reverse gearshift limit yoke.
- Apply RTV silicone sealer GM P/N 1052917, or equivalent, to the gearshift lever case plate mating surface on the gear shift lever case (Figure 62).

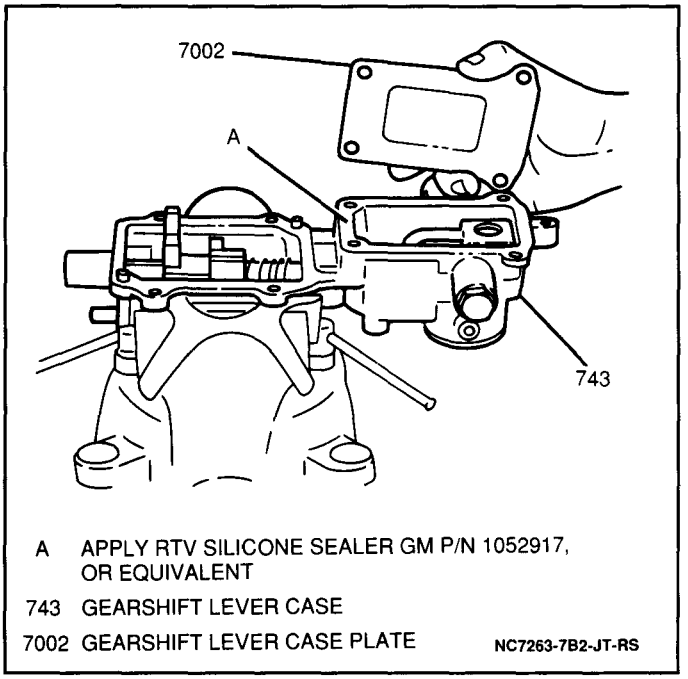

Figure 62 Installing Gearshift Lever Case Plate

12. Gearshift lever case plate onto bottom of gearshift lever case; secure with four screws.

MANUAL TRANSMISSION ASSEMBLY

Figures 63 through 69

Install or Connect

Tool Required:
J 36850 Transjel® Transmission Assembly Lubricant

1. Input shaft with input shaft needle bearing onto main shaft (Figure 63).

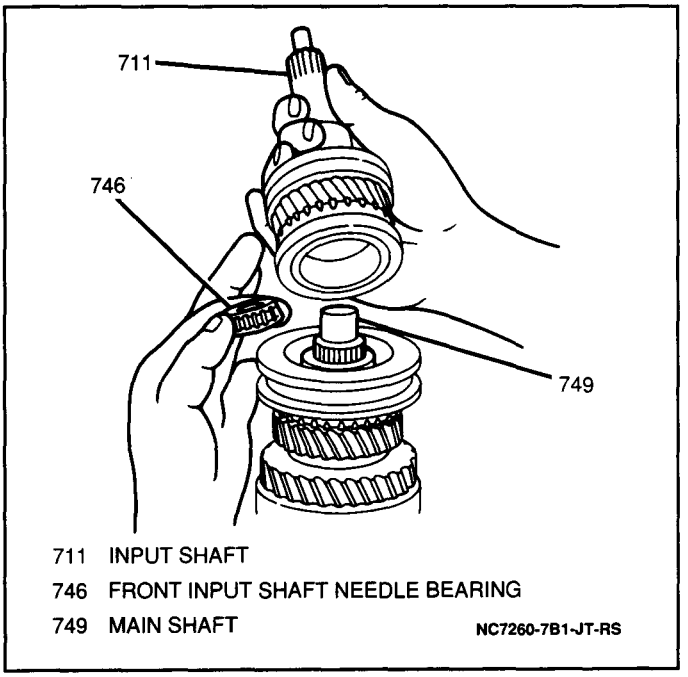

Figure 63 Assembling Input Shaft and Main Shaft

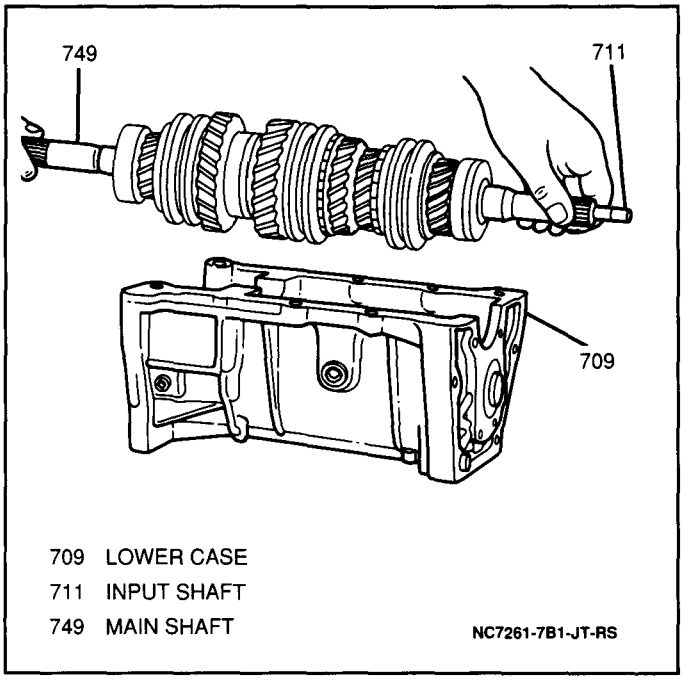

Figure 64 Installing Main Shaft and Input Shaft Assembly

2. Main shaft and input shaft assembly into lower case (Figure 64).

- Move all gearshift shafts to their neutral position.

Inspect

- Main shaft and countershaft components for smooth engagement and rotation. If the main shaft and countershaft fail to rotate smoothly, remove main shaft from lower case and inspect countershaft for binding.

- Apply RTV silicone sealer GM P/N 1052917, or equivalent, to the upper case mating surface (Figure 65).

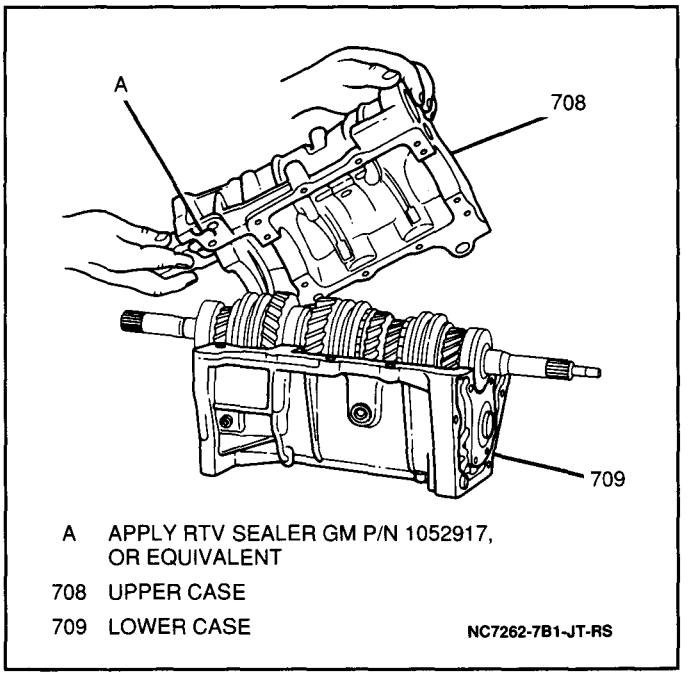

Figure 65 Assembling Upper Case and Lower Case

3. Upper case to lower case; secure with ten bolts (Figure 65).

Tighten

- Upper-to-lower case retaining bolts to 23 N·m (17 lb.ft.).

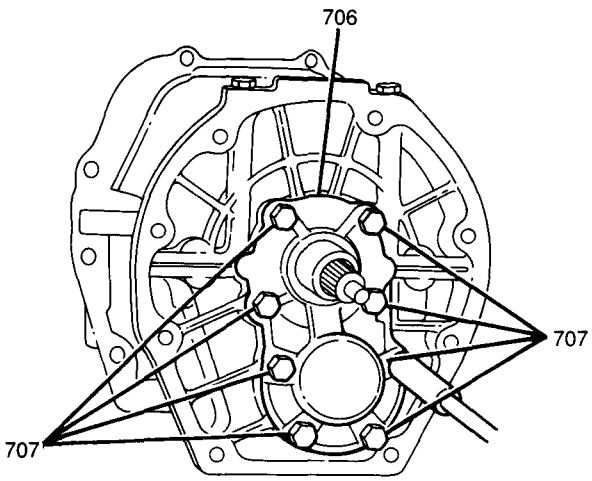

706 INPUT SHAFT BEARING RETAINER
707 INPUT SHAFT BEARING RETAINER BOLT
NC7263-7B1-JT-RS

Figure 66 Installing Input Shaft Bearing Retainer

4. Input shaft bearing retainer to upper and lower case; secure with eight bolts (Figure 66).

Tighten

- Input shaft bearing retainer bolts to 23 N·m (17 lb.ft.).

- Apply RTV sealer GM P/N 1052917, or equivalent, to the rear case mating surface (Figure 67).

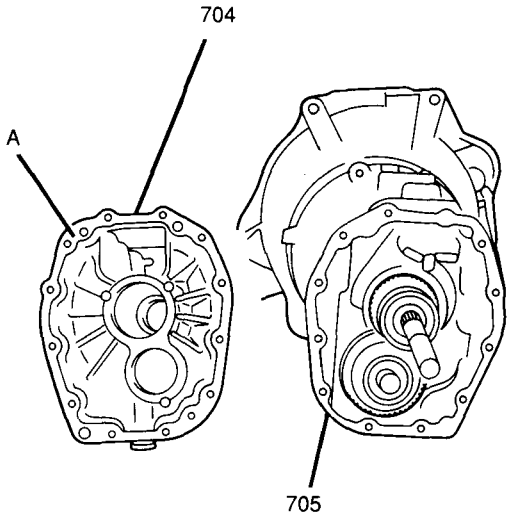

A APPLY RTV SEALER GM P/N 1052917, OR EQUIVALENT
704 REAR CASE
705 TRANSMISSION ASSEMBLY
NC7268-7B2-JT-RS

Figure 67 Installing Rear Case

5. Rear case to rear of upper and lower case; secure with twelve bolts (Figure 67).

Tighten

- Rear case bolts to 23 N·m (17 lb.ft.).

- Apply RTV silicone sealer GM P/N 1052917, or equivalent, to the gearshift lever case mating surface.

6. Gearshift lever case to rear case; secure with ten bolts.

Tighten

- Gearshift lever case bolts to 17 N·m (12 lb.ft.).

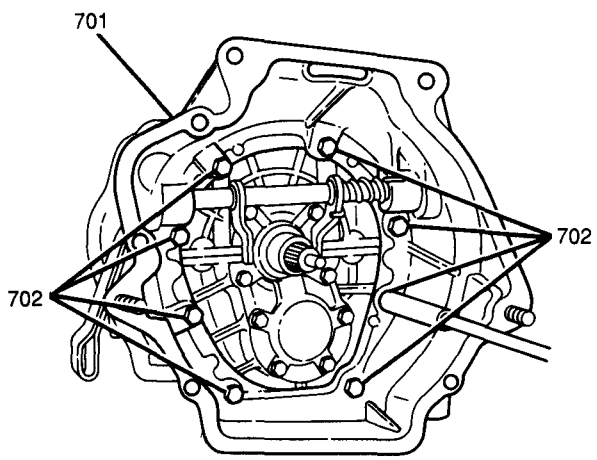

701 CLUTCH HOUSING
702 CLUTCH HOUSING BOLT
NC7265-7B1-JT-RS

Figure 68 Installing Clutch Housing

7. Clutch housing to upper and lower case; secure with eight bolts (Figure 68).

Tighten

- Clutch housing bolts to 45 N·m (33 lb.ft.).

8. Clutch release bearing to input shaft (Figure 69).

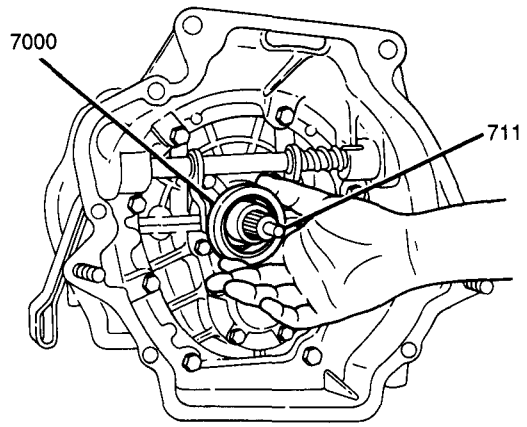

711 INPUT SHAFT
7000 CLUTCH RELEASE BEARING
NC7266-7B1-JT-RS

Figure 69 Installing Clutch Release Bearing

SPECIFICATIONS

FASTENER TORQUES

Countershaft Center Bearing Plate Bolts	6 N·m (53 lb.in.)
Reverse Idler Shaft Bolt	22 N·m (16 lb.ft.)
Locating Spring Bolts	28 N·m (21 lb.ft.)
Backup Lamp Switch	20 N·m (15 lb.ft.)
Lever Locating Bolts	20 N·m (15 lb.ft.)
Select Return Spring Bolts	32 N·m (24 lb.ft.)
Reverse Gearshift Limit Bolt	35 N·m (26 lb.ft.)
Upper-to-Lower Case Retaining Bolts	23 N·m (17 lb.ft.)
Input Shaft Bearing Retainer Bolts	23 N·m (17 lb.ft.)
Rear Case Bolts	23 N·m (17 lb.ft.)
Gearshift Lever Case Bolts	17 N·m (12 lb.ft.)
Clutch Housing Bolts	45 N·m (33 lb.ft.)

MANUAL TRANSMISSION SPECIFICATIONS

Synchronizer Ring-to-Gear Clearance (Maximum)	1.0-1.4 mm (0.039-0.055 in.)
Synchronizer Ring Key Slot Width (Maximum)	10.1-10.4 mm (0.397-0.409 in.)
Gear Shift Fork-to-Synchronizer Sleeve Clearance (Maximum)	1.0 mm (0.039 in.)
Locating Spring Length:	
Standard Length	24.0-27.0 mm (0.945-1.063 in.)
Service Limit	24.0 mm (0.945 in.)

SERVICE PARTS INFORMATION

Component Name Used in Section 7B1	Reference Name in Service Parts Catalog	Group Number
Clutch Housing	Housing, Clutch	0.683
Clutch Release Bearing	Bearing, Engine Clutch Release	0.795
Clutch Housing Bolt	Bolt, Trans Rear Case (M8x1.25x30)	4.107
Rear Case	Transmission ASM	4.317
Transmission Assembly	Transmission, ASM	4.103
Input Shaft Bearing Retainer	Retainer, Input Shaft Bearing	4.104
Input Shaft Bearing Retainer Bolt	Bolt, Input Shaft Bearing Retainer (M8x1.25x25)	4.104
Upper Case	Case ASM, Transmission	4.103
Lower Case	Case ASM, Transmission	4.103
Countershaft	Shaft, Transmission Counter	4.428
Front Countershaft Bearing C-Clip	Circlip, Countershaft Front Bearing	4.423
Front Countershaft Bearing	Bearing ASM, Countershaft	4.422
Rear Countershaft Bearing	Bearing ASM, Countershaft Rear	4.423
Rear Countershaft Bearing C-Clip	Circlip, Countershaft Rear Bearing	4.423
Countershaft Reverse Gear	Gear, Transmission Countershaft Reverse	4.417
Countershaft Center Bearing Plate	Plate, Trans Countershaft Center Bearing	4.422
Countershaft Center Bearing Plate Bolt	Bolt, Trans Countershaft Center Bearing Plate (M6x1x16)	4.422
Countershaft Center Bearing	Bearing, Countershaft Center	4.422
Countershaft 5th Gear	Gear, Trans Countershaft 5th Gear	4.422
Reverse Idler Gear Needle Bearing	Bearing, Transmission Reverse Idler Gear	4.431
Reverse Idler Gear	Gear, Transmission Reverse Idler	4.430
Reverse Idler Shaft Bolt	Bolt, Transmission Shaft Reverse Idler Shaft	4.435
Reverse Idler Shaft	Shaft, Transmission Reverse Idler Gear	4.433
Input Shaft	Shaft, Transmission Input	4.351
Front Input Shaft Oil Seal	Seal, Input Shaft Oil	4.354
Front Input Shaft Bearing	Bearing ASM, Input Shaft Front	4.352
Front Input Shaft Needle Bearing	Bearing, Input Shaft Pocket	4.352
Front Input Shaft Bearing C-Clip	Circlip, Input Shaft Front Bearing	4.353
Main Shaft	Shaft, Transmission Main	4.403
Main Shaft 1st Gear	Gear, Main Shaft Low	4.417
Main Shaft 2nd Gear	Gear, Main Shaft 2nd	4.395
Main Shaft 3rd Gear	Gear, Main Shaft 3rd	4.415
Main Shaft 5th Gear	Gear, Main Shaft 5th	4.415

Main Shaft Reverse Gear	Gear, Transmission Main Shaft Reverse	4.417
Main Shaft Rear Bearing	Bearing ASM, Main Shaft Rear	4.408
Main Shaft 1st Gear Bushing	Bushing, Main Shaft Low Gear	4.419
Main Shaft Reverse Gear Bushing	Bushing, Transmission Main Shaft Reverse Gear	4.419
Main Shaft 1st Gear Needle Bearing	Bearing, Main Shaft Low Gear	4.419
Main Shaft 2nd Gear Needle Bearing	Bearing, Main Shaft 2nd Gear	4.398
Main Shaft 3rd Gear Needle Bearing	Bearing, Main Shaft 3rd Gear	4.352
Main Shaft 5th Gear Needle Bearing	Bearing, Main Shaft 5th Gear	4.352
Main Shaft Reverse Gear Needle Bearing	Bearing, Transmission Main Shaft Reverse Gear	4.419
Main Shaft Bearing Washer	Washer, Main Shaft Bearing	4.406
Main Shaft 5th Gear Washer	Washer, Main Shaft 5th Gear	4.415
Main Shaft Center Bearing	Bearing, Main Shaft Center	4.408
Main Shaft Rear Bearing C-Clip	Circlip, Main Shaft Rear Bearing	4.412
Backup Lamp Switch	Switch ASM, Backup Lamp	2.698
Locating Spring Bolts	Screw, Gear Shift Locating	4.311
Reverse Gearshift Shaft	Shaft, Reverse Gear Shift	4.309
High Speed Gearshift Shaft	Shaft, High Speed Gear Shift	4.309
Low Speed Gearshift Shaft	Shaft, Low Speed Gear Shift	4.309
Low Speed Gearshift Fork	Fork, Low Speed Gear Shift	4.303
High Speed Gearshift Fork	Fork, High and Reverse Gear Shift	4.303
Reverse Gearshift Fork	Fork, High and Reverse Gear Shift	4.303
Reverse Gearshift Fork Roll Pin	Pin, Gear Shift Fork Rev	4.302
High Speed Gearshift Fork Roll Pin	Pin, Gear Shift Fork	4.303
Low Speed Gearshift Fork Roll Pin	Pin. Gear Shift Fork	4.303
Locating Ball	Ball, Gear Shift Locating	4.311
Locating Spring	Spring, Gear Shift Locating	4.311
Interlock Ball	Ball, Gear Shift Locating	4.311
Rubber Plug	Plug, Gear Shift Locating	4.307
Interlock Pin	Roller, Gear Shift Locating	4.311
Synchronizer Key	Key, Main Shaft Low and High Speed Synchronizer Hub	4.384
Low Speed Synchronizer Hub	Hub, Main Shaft Synchronizer Low Speed	4.384
Low Speed Synchronizer Ring	Ring, Main Shaft Synchronizer Low Speed	4.384
Low Speed Synchronizer Sleeve	Sleeve, Main Shaft Synchronizer Low Speed	4.384
Low Speed Synchronizer Spring	Spring, Main Shaft Synchronizer Low Speed	4.384
Main Shaft Washer Ball	Ball, Main Shaft Washer	4.399
High Speed Synchronizer Hub	Hub, Main Shaft Synchronizer High Speed	4.384
High Speed Synchronizer Ring	Ring, Main Shaft Synchronizer High Speed	4.384
High Speed Synchronizer Sleeve	Sleeve, Main Shaft Synchronizer High Speed	4.384
High Speed Synchronizer Spring	Spring, Main Shaft Synchronizer High Speed	4.384
High Speed and Reverse Hub C-Clip	Circlip, High Speed and Reverse Hub	4.399
Reverse Synchronizer Sleeve	Sleeve, Main Shaft Synchronizer Reverse	4.384
Reverse Synchronizer Hub	Hub, Main Shaft Synchronizer Reverse	4.384
Select Return Spring Bolt	Plug, Select Return Spring	4.302
Select Return Spring	Spring, Select Return	4.302
Select Guide Pin	Pin, Select Guide	4.302
Gearshift Lever Case	Case, Gear Shift Lever	4.105
Reverse Gearshift Limit Bolt	Bolt, Rev GR Shift Limiting	4.302
Gearshift Shaft	Shaft, Gear Shift	4.302
Gearshift Lever Case Plug	Plug, Gear Shift Lever Case Shaft	4.103
Lever Locating Bolt	Bolt, Lever Locating	4.307
Gearshift Lever Case Seat	Seat, Gear Shift Lever Case	4.012
Gearshift Control Lever Bushing	Bushing, Gear Shift Control Lever	4.037
Reverse Gearshift Limit Yoke	Yoke, Reverse Gear Shift Limiting	4.303
Gearshift Arm	Arm, Gear Shift	4.303
Gearshift Lever	Lever, Gear Shift	4.302
Gearshift Limit Spring	Spring, Gearshift Limiting	4.307
Roll Pin	Pin, Gear Shift Yoke	4.302

SPECIAL TOOLS

1
J 37637

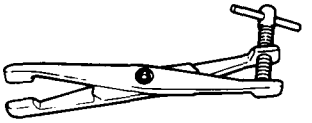

2
J 34757

3
J 22888-20

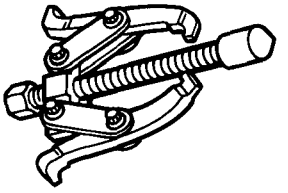

4
J 22888-30

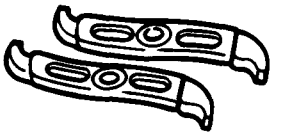

5
J 37754

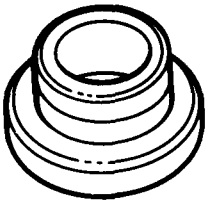

6
J 35664

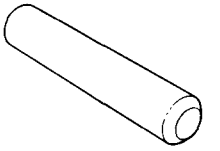

7
J 35871

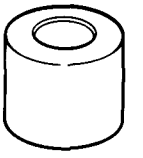

8
J 22912-01

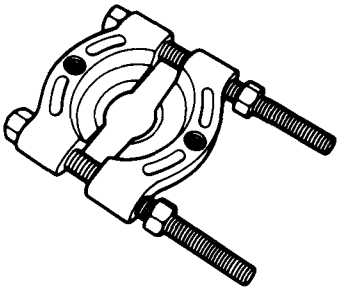

1 CASE SEPARATOR
2 CIRCLIP REMOVER
3 UNIVERSAL PULLER
4 PULLER LEGS
5 COUNTERSHAFT BEARING INSTALLER
6 BEARING INSTALLER
7 COUNTERSHAFT FRONT BEARING INSTALLER
8 SPLIT PLATE

NC7267-7B1-JT-RS

9
J 26941

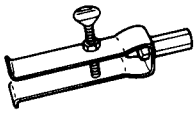

10
J 23907

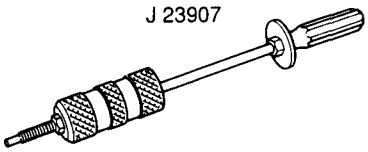

11
J 37209

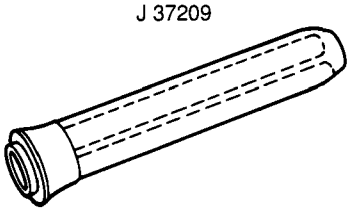

12
J 37753

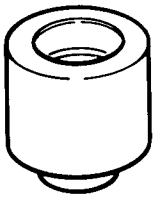

13
J 36850

14
J 28406

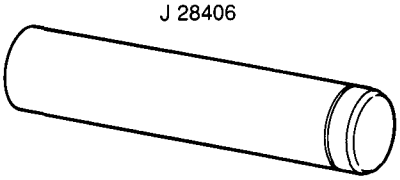

15
J 26900-7

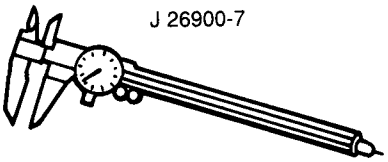

16
J 35425

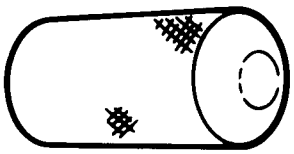

9 TRANSMISSION CASE BEARING CUP REMOVE
10 SLIDE HAMMER
11 STUB SHAFT SEAL INSTALLER
12 BEARING INSTALLER
13 TRANSJEL® TRANSMISSION ASSEMBLY LUBRICANT
14 BEARING INSTALLER
15 DIAL CALIPER
16 HIGH SPEED HUB INSTALLER

NC7268-7B1-JT-RS

17
J 29369-1

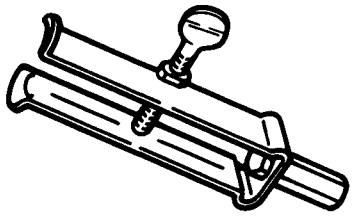

19
J 37758

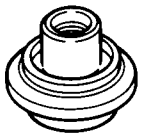

18
J 37750

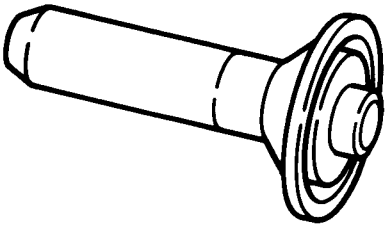

20
J 8092

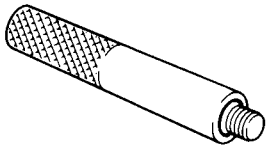

17 OUTPUT SHAFT BEARING REMOVER
18 OIL SEAL INSTALLER
19 COUNTERSHAFT REAR PLUG INSTALLER
20 DRIVER HANDLE

NC7273-7B2-JT-RS

SECTION 7C

CLUTCH

CAUTION: When servicing clutch parts, do not create dust by grinding or sanding clutch disc or by cleaning parts with a dry brush or with compressed air. (A water dampened cloth — NOT SOAKED — should be used.) The clutch disc contains asbestos fibers which can become airborne if dust is created during servicing. Breathing dust containing asbestos fibers may cause serious bodily harm.

NOTICE: When fasteners are removed, always reinstall them at the same location from which they were removed. If a fastener needs to be replaced, use the correct part number fastener for that application. If the correct part number fastener is not available, a fastener of equal size and strength (or stronger) may be used. Fasteners that are not reused, and those requiring thread-locking compound, will be called out. The correct torque values must be used when installing fasteners that require them. If the above procedures are not followed, parts or system damage could result.

CONTENTS

General Description 7C-3
Principal Components 7C-3
Driving Members 7C-3
Driven Member 7C-3
Operating Members 7C-3
Clutch Pedal Position (CPP) Switch 7C-3
Diagnosis 7C-3
Preliminary Checks 7C-3
Clutch "Spin Down" Time 7C-4
On-Vehicle Service 7C-6
Clutch Pedal Assembly 7C-6
Clutch Pedal Height Adjustment 7C-9
Clutch Pedal Free Travel Adjustment 7C-9
Clutch Pedal Position (CPP) Switch 7C-10
Clutch Cable 7C-11
Pressure Plate, Clutch Disc and Flywheel 7C-13
Clutch Pilot Bearing 7C-15
Clutch Release Bearing 7C-16
Clutch Release Shaft and Bushings 7C-16
Specifications 7C-19
Fastener Torques 7C-19
Clutch Specifications 7C-19
Service Parts Information 7C-19
Special Tools 7C-21

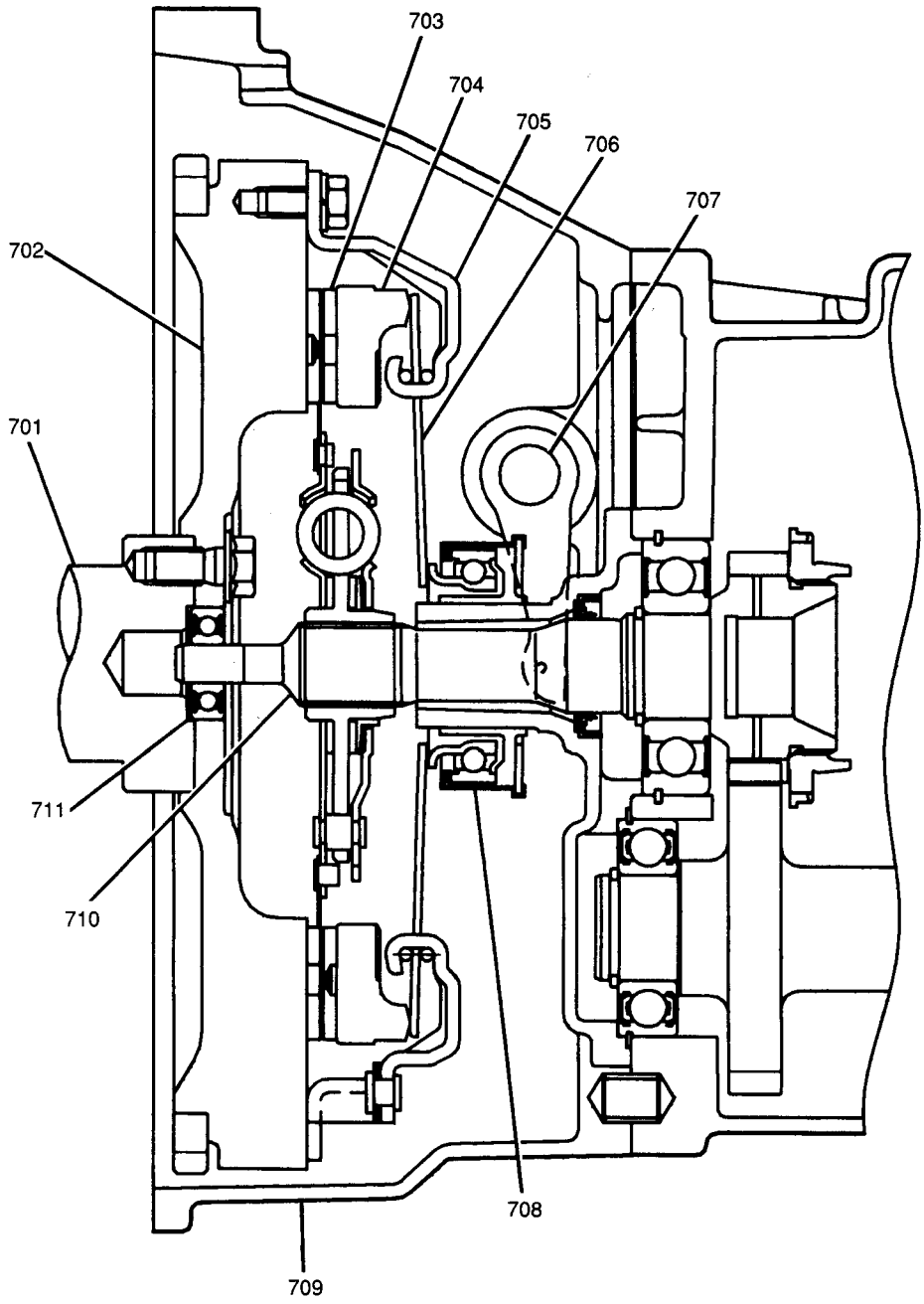

701 CRANKSHAFT
702 FLYWHEEL
703 CLUTCH DISC
704 PRESSURE PLATE
705 PRESSURE PLATE COVER
706 DIAPHRAGM SPRING
707 CLUTCH RELEASE SHAFT
708 CLUTCH RELEASE BEARING
709 CLUTCH HOUSING
710 INPUT SHAFT
711 CLUTCH PILOT BEARING

NC7601-7C-JT-RS

Figure 1 Clutch Components

GENERAL DESCRIPTION

PRINCIPAL COMPONENTS

The clutch assembly contains three major components: The clutch disc, the pressure plate and the clutch release bearing (Figure 1). The clutch disc is a single, dry disc fitted with four torsional coil springs which help to reduce shock upon engine engagement with the transmission. The hub of the clutch disc is splined to the transmission input shaft causing the transmission input shaft to turn when the clutch disc is engaged. The pressure plate cover, which contains the pressure plate and its diaphragm spring, is bolted to the engine flywheel. Pressure on the the diaphragm spring is controlled by a set of tapering levers which surround the diaphragm spring. The clutch release bearing rests against the diaphragm spring levers. When the clutch is engaged (clutch pedal released), the pressure plate presses the clutch disc against the flywheel causing the clutch disc to turn and rotate the transmission input shaft.

When the clutch disc is disengaged (clutch pedal depressed), the clutch release bearing pushes in on the diaphragm spring levers, releasing pressure against the clutch disc and disengaging engine torque to the transmission input shaft.

The clutch assembly is engaged and disengaged by a release shaft. This release shaft is connected to the clutch cable by the clutch release lever. The clutch cable is connected to the clutch pedal. When the clutch pedal is depressed, the clutch cable pulls the release lever and turns the release shaft. The release shaft pushes the release bearing into the diaphragm spring levers — releasing pressure against the clutch disc and disengaging it.

Driving Members

The driving members consist of the flywheel and pressure plate. Both of these surfaces are machined to a smooth finish to produce little or no vibration or noise upon clutch engagement. The pressure plate is fitted inside the pressure plate cover and is not serviceable. If the pressure plate appears excessively worn or damaged upon inspection, the pressure plate and cover must be replaced as an assembly. The flywheel can be removed and machined if necessary. When removing the engine flywheel during clutch service, an index mark (reference mark) should be made in relation to its position on the engine crankshaft. If this precaution is not observed, an engine imbalance may result.

Driven Member

The driven member is a single clutch disc fitted with four torsional coil springs that are placed between the driven surface and the splined hub. These springs help reduce the shock of engine torque upon clutch engagement. The driven surface of the clutch disc consists of an asbestos material that is riveted onto the driven plate of the clutch disc and is resistant to frictional heat that can occur during clutch engagement and disengagement.

OPERATING MEMBERS

The operating members control clutch engagement/disengagement and are known as the clutch release system. The clutch release system consists of:

- The clutch release bearing.
- The clutch release shaft.
- The clutch release lever.
- The clutch cable.
- The clutch pedal shaft arm.
- The clutch pedal.

When the clutch pedal is depressed, the clutch pedal shaft causes the clutch pedal shaft arm to turn. As the clutch pedal shaft arm turns, it pulls on the clutch cable which is connected by a clevis to the clutch pedal shaft arm. The cable pulls on the clutch release lever which turns the clutch release shaft. As the clutch release shaft turns, it pushes the clutch release bearing into the pressure plate diaphragm spring levers. This releases the pressure plate from the clutch disc and disengages the engine from the transmission.

CLUTCH PEDAL POSITION (CPP) SWITCH

The CPP switch is mounted above the clutch pedal and contacts the clutch pedal lever. This switch is incorporated into the starter motor circuit to prevent the engine from being started with the clutch engaged or the transmission in gear. When the clutch pedal is not depressed, an open in the starter motor circuit exists preventing starter motor operation. When the clutch pedal is depressed, the circuit is closed, making the starter motor circuit complete and operational. For diagnosis of the CPP switch, refer to SECTION 8A.

DIAGNOSIS

PRELIMINARY CHECKS

Before attempting to repair the clutch, transmission or related components for any reason other than an obvious fault, the problem and probable cause should be identified. Most clutch and manual transmission problems are revealed by shifting difficulties such as high shift effort, gear clash or gear grinding. When any of these problems occur, a careful analysis of these conditions should be made before removing the clutch or transmission for repairs.

Inspect

1. Engine idle speed. Refer to SECTION 6E.
2. Clutch pedal height. Refer to "Clutch Pedal Height Adjustment" later in this section.
3. Clutch pedal free travel. Refer to "Clutch Pedal Free Travel Adjustment" later in this section.
4. Clutch cable for wear or damage. Refer to "Clutch Cable" later in this section.

CLUTCH "SPIN DOWN" TIME

1. Run the engine at normal idle with the transmission in neutral and the clutch engaged.
2. Disengage the clutch (clutch pedal depressed), wait approximately nine seconds and shift the transmission into reverse.
3. If a grinding noise is heard, check the clutch for engagement.

After performing the preliminary checks and checking clutch spin down time, use the "Clutch Diagnosis Chart" to assist in proper diagnosis of clutch problems.

CONDITION	INSPECT COMPONENT	FOR PROBABLE CAUSE
FAILS TO RELEASE (PEDAL DEPRESSED TO FLOOR — GEARSHIFT CONTROL LEVER DOES NOT MOVE FREELY IN AND OUT OF REVERSE GEAR WITHOUT GEAR CLASH)	CLUTCH CABLE	IMPROPER PEDAL FREE TRAVEL ADJUSTMENT
	CLUTCH PEDAL	FOREIGN OBJECT BETWEEN CLUTCH PEDAL AND FLOOR
		IMPROPER PEDAL STOP ADJUSTMENT
	CLUTCH RELEASE BEARING	IMPROPERLY INSTALLED IN RELEASE SHAFT FORK
	PRESSURE PLATE	LOOSE PRESSURE PLATE COVER BOLTS
	CLUTCH DISC	IMPROPER SPIN DOWN TIME — REFER TO "CLUTCH SPIN DOWN TIME"
SLIPPING	CLUTCH CABLE	IMPROPERLY ADJUSTED CAUSING PARTIAL CLUTCH ENGAGEMENT
	PRESSURE PLATE	WEAK DIAPHRAGM SPRING
	CLUTCH DISC	OIL CONTAMINATION (OIL SOAKED)
		EXCESSIVELY WORN, EXPLODED OR DAMAGED
GABBING (CHATTERING)	ENGINE MOUNTS	LOOSE OR WORN
	PRESSURE PLATE	WARPED PRESSURE PLATE SURFACE
		BURNED OR SMEARED RESIN ON PRESSURE PLATE SURFACE
	CLUTCH DISC	OIL CONTAMINATION (OIL SOAKED)
		EXCESSIVELY WORN, EXPLODED OR DAMAGED
		WORN OR BROKEN TORSION SPRINGS
		WORN SPLINES IN DISC HUB
	FLYWHEEL	FLYWHEEL SURFACE RUNOUT
		BURNED OR SMEARED RESIN ON FLYWHEEL SURFACE
	TRANSMISSION INPUT SHAFT	WORN OR DAMAGED SPLINES

NC7602-7C-JT-RS

Figure 2 Clutch Diagnosis Chart — 1 of 2

CONDITION	INSPECT COMPONENT	FOR PROBABLE CAUSE
CLUTCH RELEASE BEARING NOISE WITH CLUTCH FULLY ENGAGED	CLUTCH RELEASE BEARING	IMPROPERLY INSTALLED
		WORN OR DAMAGED
	CLUTCH RELEASE SHAFT	LOOSE OR WORN BUSHINGS
PEDAL STAYS ON FLOOR	CLUTCH CABLE	BROKEN OR DISCONNECTED
	CLUTCH PEDAL RETURN SPRING	LOOSE OR MISPOSITIONED
	CLUTCH RELEASE SHAFT	BINDING IN CLUTCH HOUSING
HARD PEDAL EFFORT	CLUTCH CABLE	BINDING OR MISADJUSTED
	CLUTCH RELEASE SHAFT	BINDING IN CLUTCH HOUSING
	PRESSURE PLATE	BINDING OR DAMAGED DIAPHRAGM SPRING

NC7603-7C-JT-RS

Figure 3 Clutch Diagnosis Chart — 2 of 2

ON-VEHICLE SERVICE

CLUTCH PEDAL ASSEMBLY

Figures 4 through 7

Remove or Disconnect

Important

- Before removing the clutch pedal shaft arm from the clutch pedal shaft, place a reference mark on the clutch pedal shaft and clutch pedal shaft arm to ensure correct assembly. If the clutch pedal shaft arm is installed in a position other than the one from which it was removed, the clutch release lever travel will increase or decrease resulting in a misadjusted clutch pedal.

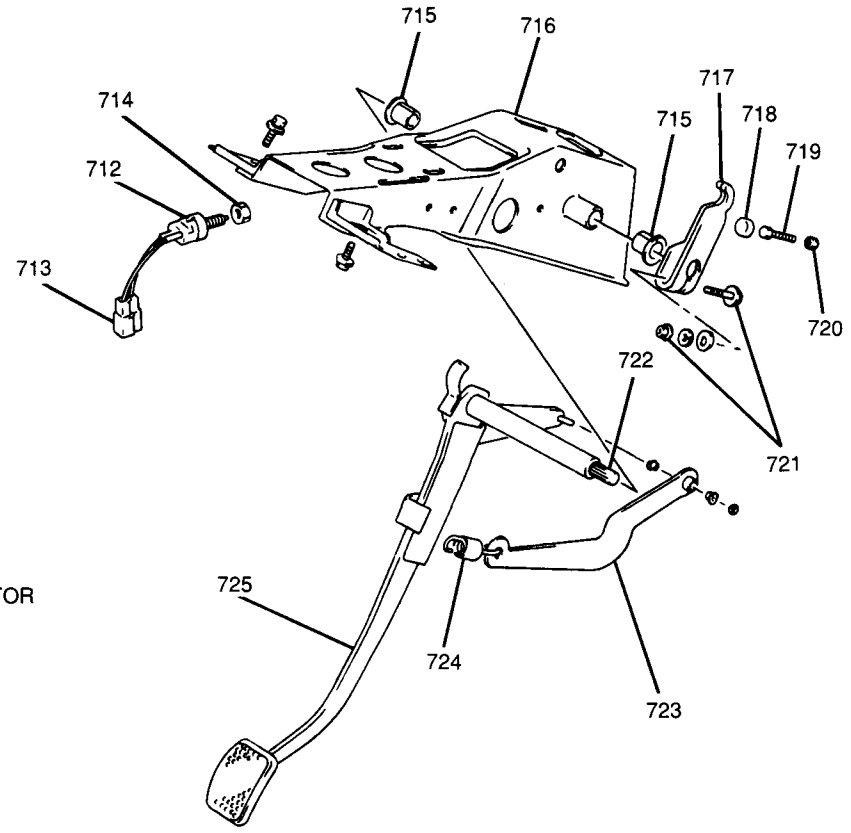

712 CLUTCH PEDAL POSITION (CPP) SWITCH
713 CPP SWITCH ELECTRICAL CONNECTOR
714 CPP SWITCH LOCKNUT
715 CLUTCH PEDAL SHAFT BUSHING
716 BRAKE PEDAL BRACKET
717 CLUTCH PEDAL SHAFT ARM
718 CLUTCH PEDAL STOP CUSHION
719 CLUTCH PEDAL STOP BOLT
720 CLUTCH PEDAL STOP LOCKNUT
721 CLUTCH PEDAL SHAFT ARM BOLT AND NUT
722 CLUTCH PEDAL SHAFT
723 CLUTCH PEDAL RETURN SPRING LEVER
724 CLUTCH PEDAL RETURN SPRING
725 CLUTCH PEDAL

Figure 4 Clutch Pedal Components

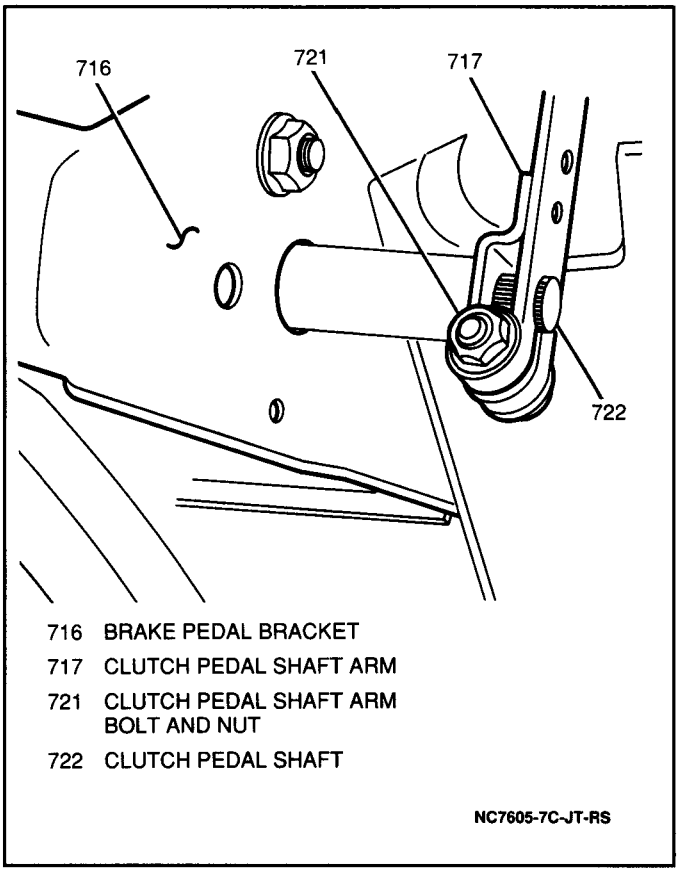

Figure 5 Clutch Pedal Shaft Arm

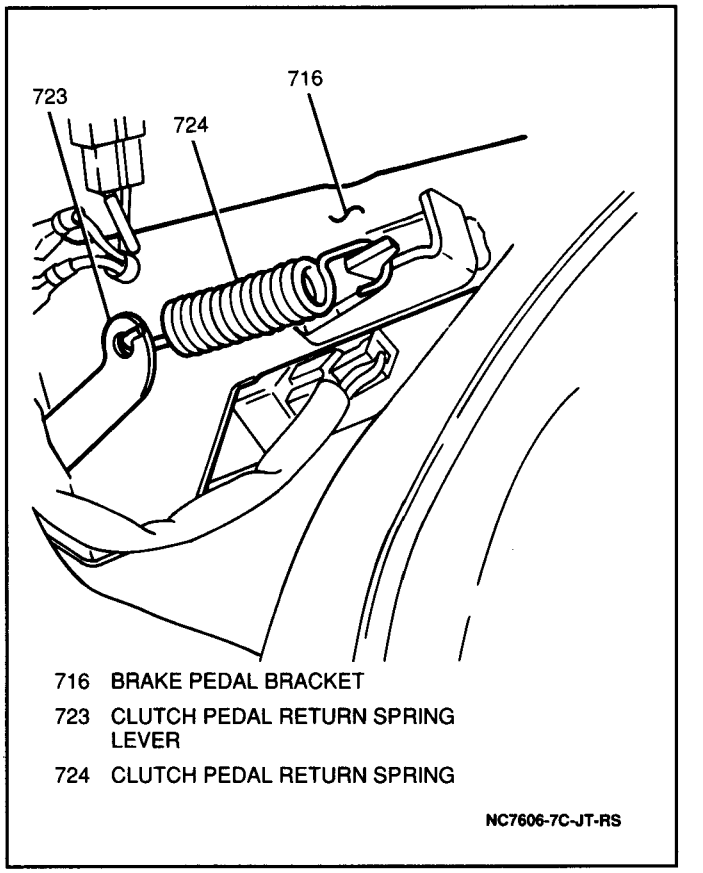

Figure 6 Clutch Pedal Return Spring

1. One nut, one bolt and clutch pedal shaft arm from clutch pedal shaft (Figure 5).
2. Clutch pedal return spring from brake pedal bracket (Figure 6).

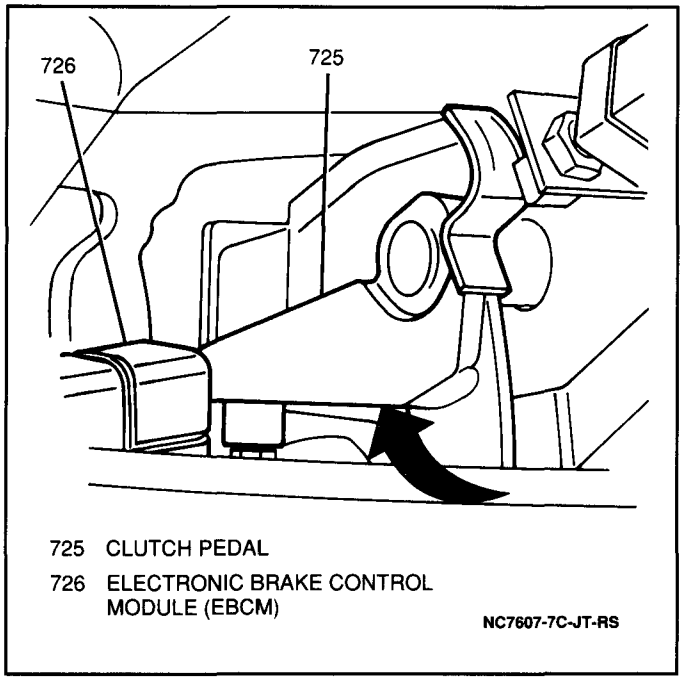

Figure 7 Removing Clutch Pedal

- Push clutch pedal in to clear the electronic brake control module (EBCM) and slide the clutch pedal to the left (Figure 7).

3. Clutch pedal, clutch pedal return spring lever and clutch pedal return spring from brake pedal bracket.
4. Clutch pedal shaft bushings from brake pedal bracket (Figure 4).

Inspect

1. Clutch pedal shaft and clutch pedal shaft bushings for excessive wear. Replace as necessary.
2. Clutch pedal lever for distortion or bending. Replace as necessary.
3. Clutch pedal return spring for distortion or weakness. Replace as necessary.

Install or Connect

1. Clutch pedal shaft bushings into brake pedal bracket (Figure 4).

- Apply a thin coat of lithium grease to the inside of the clutch pedal shaft bushings.

2. Clutch pedal, clutch pedal return spring lever and clutch pedal return spring into brake pedal bracket.
3. Clutch pedal return spring to brake pedal bracket (Figure 6).
4. Clutch pedal shaft arm onto clutch pedal shaft aligning index marks made during removal; secure with one bolt and one nut (Figure 5).

Tighten

- Clutch pedal shaft arm bolt and nut to 24 N·m (17 lb.ft.).

Important

- For clutch adjustment procedures, refer to "Clutch Pedal Height Adjustment" and "Clutch Pedal Free Travel Adjustment" later in this section.

CLUTCH PEDAL HEIGHT ADJUSTMENT

Figures 4 and 8

1. Loosen the clutch pedal stop locknut (Figure 4).
2. Turn the clutch pedal stop bolt counterclockwise to lower the clutch pedal toward the floor, or clockwise to raise the clutch pedal height away from floor. Clutch pedal height should be 5.0 mm (0.2-inch) above brake pedal height (Figure 8).

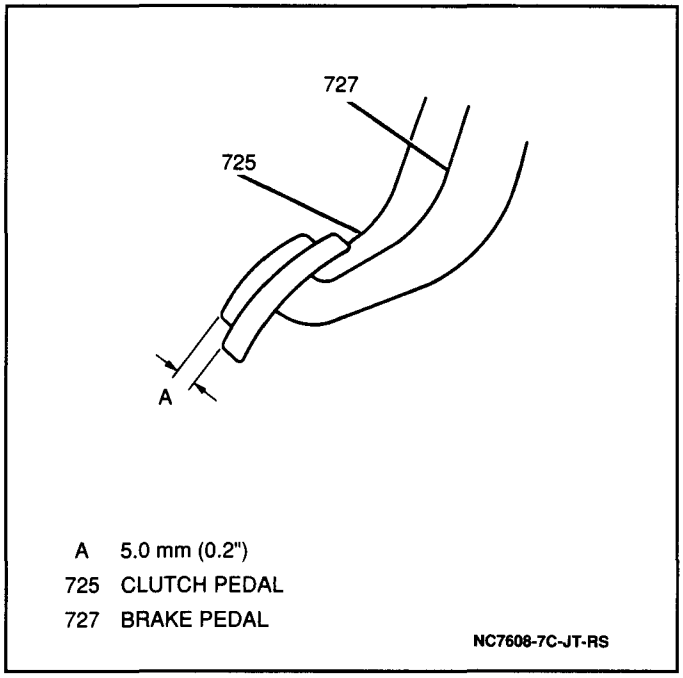

Figure 8 Adjusting Clutch Pedal Height

Tighten

- Clutch pedal stop locknut to 13 N·m (115 lb.in.).

CLUTCH PEDAL FREE TRAVEL ADJUSTMENT

Figure 9

Inspect

- Clutch pedal height adjustment. Refer to "Clutch Pedal Height Adjustment" earlier in this section.

1. Depress the clutch pedal lightly until tension on the clutch cable can be felt.
2. Measure clutch pedal free travel. Clutch pedal free travel should 15 to 25 mm (0.6 to 1.1-inch).

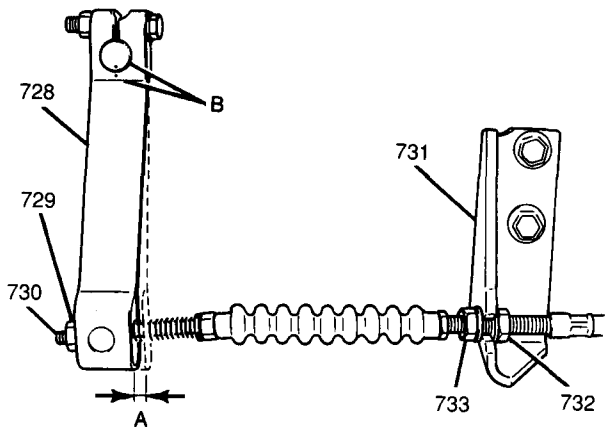

A 0.5–1.5 mm (0.02–0.06")
B CLUTCH RELEASE LEVER AND SHAFT ALIGNMENT MARKS
728 CLUTCH RELEASE LEVER
729 CLUTCH RELEASE LEVER ADJUSTMENT NUT
730 CLUTCH CABLE
731 CLUTCH CABLE BRACKET
732 CLUTCH CABLE ADJUSTMENT NUT "A"
733 CLUTCH CABLE ADJUSTMENT NUT "B"

NC7609-7C-JT-RS

Figure 9 Adjusting Clutch Pedal and Clutch Release Lever Free Travel

If clutch pedal free travel is below specification, raise vehicle, loosen clutch cable adjustment nut "B" at the clutch cable bracket until clutch pedal free travel is within specification. Then, tighten clutch cable adjustment nut "A." If clutch pedal free travel is above specification, raise vehicle, loosen both clutch cable adjustment nuts "A" and "B" at the clutch cable bracket and tighten clutch cable adjustment nut "A" until clutch pedal free travel is within specification. Then, tighten adjustment nut "B" (Figure 9).

Tighten

- Clutch cable adjustment nuts "A" and "B" to 18 N·m (13 lb.ft.).

- Raise and suitably support vehicle. Refer to SECTION 0A.

3. Measure clutch release lever free travel adjustment. Clutch release lever free travel should be 0.5 to 1.5 mm (0.02 to 0.06-inch) (Figure 9).

If clutch release lever free travel is below specification, loosen the clutch release lever adjustment nut until clutch release lever free travel is within specification. If clutch release lever free travel is above specification, tighten the clutch release lever adjustment nut until clutch release lever free travel is within specification (Figure 9).

Important

- Make sure marks on the clutch release lever and the clutch release shaft are aligned with each other (Figure 9). If marks are not aligned, remove the clutch release lever from the clutch release shaft, align marks and repeat free travel adjustment procedures.

- Lower vehicle.

CLUTCH PEDAL POSITION (CPP) SWITCH

Figures 10, 11 and 12

Remove or Disconnect

1. Negative (-) battery cable.
2. CPP switch electrical connector from CPP switch.

- Loosen CPP switch locknut (Figure 10).

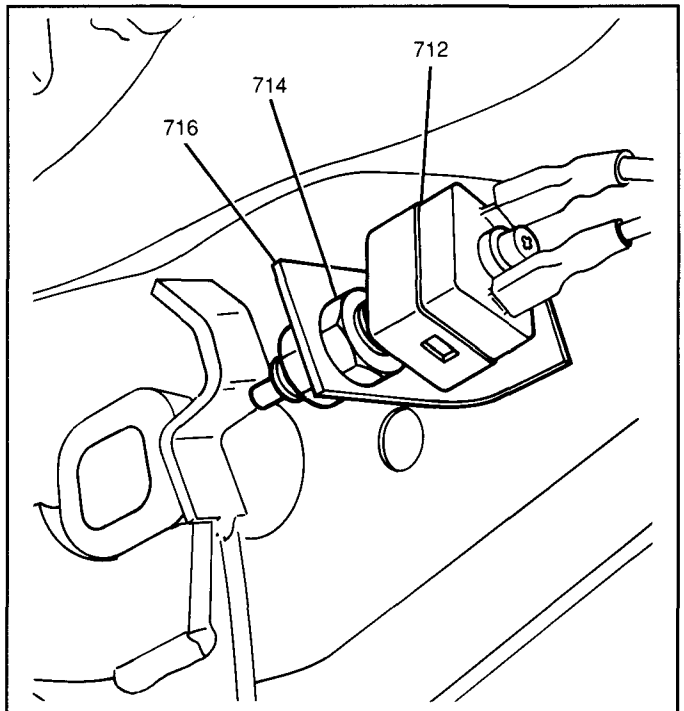

712 CLUTCH PEDAL POSITION (CPP) SWITCH
714 CPP SWITCH LOCKNUT
716 BRAKE PEDAL BRACKET

PC7610-7C-JT-RS

Figure 10 Clutch Pedal Position (CPP) Switch at Brake Pedal Bracket

3. CPP switch from brake pedal bracket by turning counterclockwise.

Inspect

- For CPP switch diagnosis, refer to SECTION 8A.

Install or Connect

1. CPP switch into brake pedal bracket by turning clockwise.

Adjust

Tool Required:
J 39200 Digital Multimeter

- CPP switch by inserting the probes of a J 39200 into either side of the CPP switch electrical connector.

A. Depress the clutch pedal to within 50 to 70 mm (2.0 to 2.7-inches) from the floor (Figure 11).

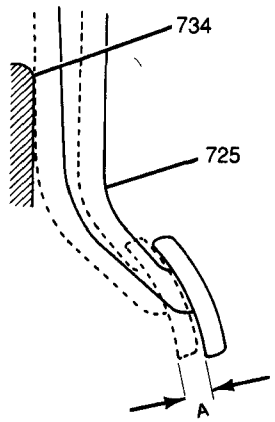

A 50–70 mm (2.0–2.7")
725 CLUTCH PEDAL
734 FLOOR
NC7611-7C-JT-RS

Figure 11 Clutch Pedal Distance From Floor For Clutch Pedal Position (CPP) Switch Adjustment

B. Screw the CPP switch clockwise into the brake pedal bracket until continuity is obtained.

Tighten

- CPP switch locknut to 13 N·m (115 lb.in.).

2. CPP switch electrical connector to CPP switch.
3. Negative (-) battery cable.

Tighten

- Negative (-) battery cable-to-negative (-) battery terminal retainer to 15 N·m (11 lb.ft.).

CLUTCH CABLE

Figures 9, 13, 14 and 15

Remove or Disconnect

- Raise and suitably support vehicle. Refer to SECTION 0A.
- Loosen clutch cable adjustment nuts "A" and "B" (Figure 9).

1. One nut and clutch cable from clutch release lever and clutch cable bracket (Figure 9).
2. Clutch cable from two clutch cable clamps below radiator.

- Lower vehicle.

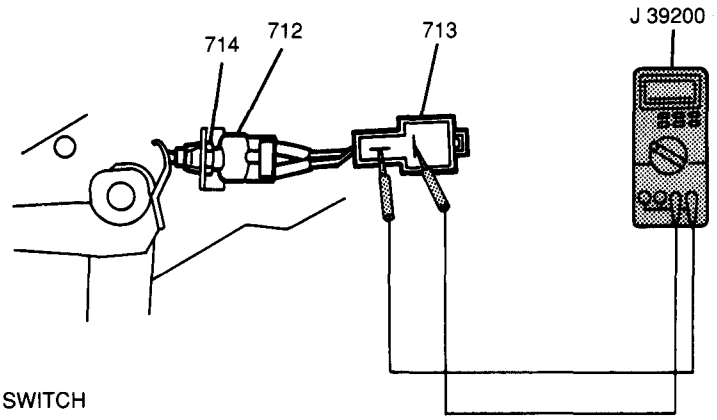

712 CLUTCH PEDAL POSITION (CPP) SWITCH
713 CPP SWITCH ELECTRICAL CONNECTOR
714 CPP SWITCH LOCKNUT
PC7612-7C-JT-RS

Figure 12 Adjusting Clutch Pedal Position (CPP) Switch

3. Clutch cable from upper clutch cable clamp at left front strut tower (Figure 13).

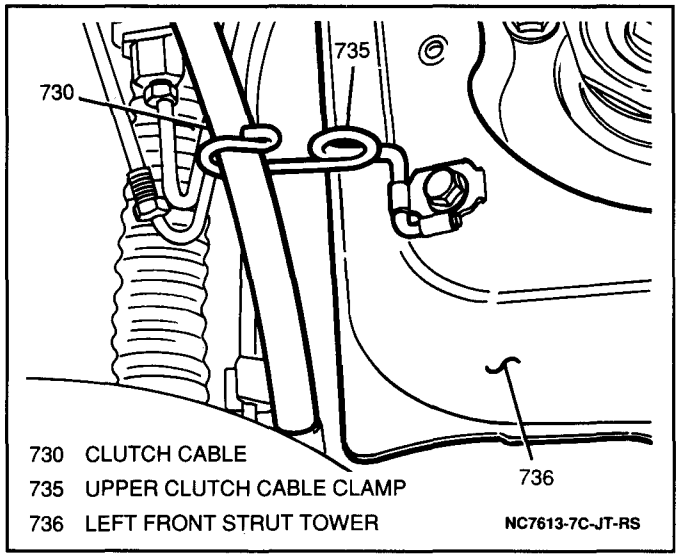

Figure 13 Clutch Cable at Upper Clutch Cable Clamp

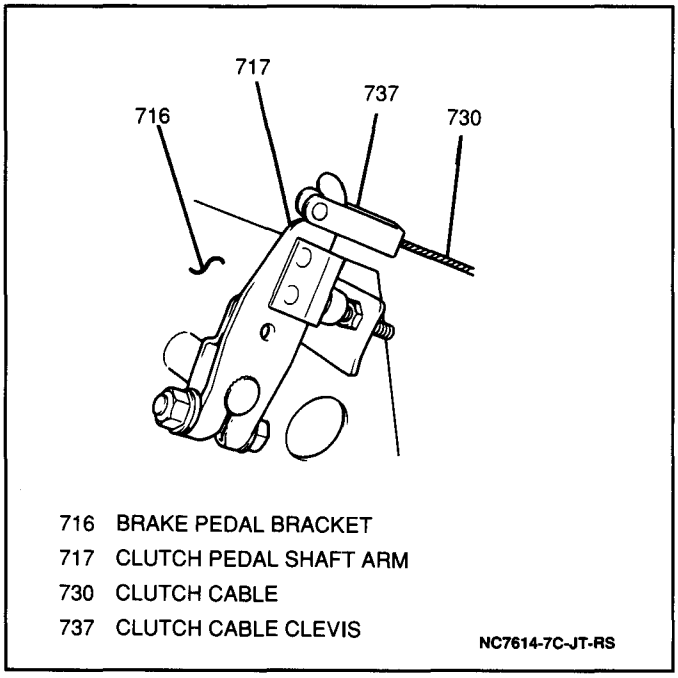

Figure 14 Clutch Cable Clevis at Clutch Pedal Shaft Arm

4. Clutch cable clevis from clutch pedal shaft arm (Figure 14).

5. Two clutch cable grommet bolts and clutch cable from vehicle from engine compartment side of bulkhead (Figure 15).

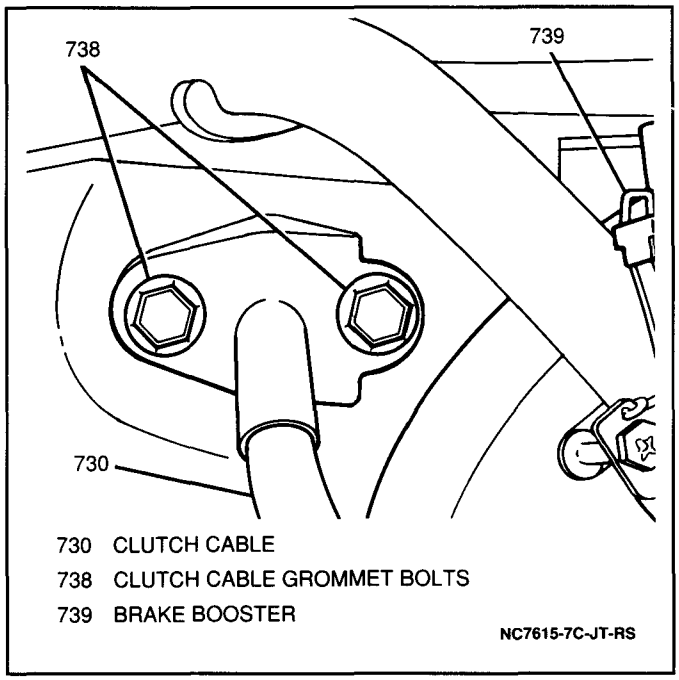

Figure 15 Clutch Cable Grommet Bolts

Inspect

- Clutch cable for fraying or kinks. Replace as necessary.

Install or Connect

1. Clutch cable into bulkhead from engine compartment side; secure with two clutch cable grommet bolts (Figure 15).

   Tighten

   - Clutch cable grommet bolts to 8 N·m (70 lb.in.).
2. Clutch cable clevis to clutch pedal shaft arm (Figure 14).
3. Clutch cable into upper clutch cable clamp at left front strut tower (Figure 13).

- Raise and suitably support vehicle. Refer to SECTION 0A.

4. Clutch cable into two clutch cable clamps below radiator.
5. Clutch cable into clutch release lever and clutch cable bracket; secure with clutch release lever adjustment nut (Figure 9).

- Lower vehicle.

Adjust

- For clutch cable adjustment procedures, refer to "Clutch Pedal Height Adjustment" and "Clutch Pedal Free Travel Adjustment" earlier in this section.

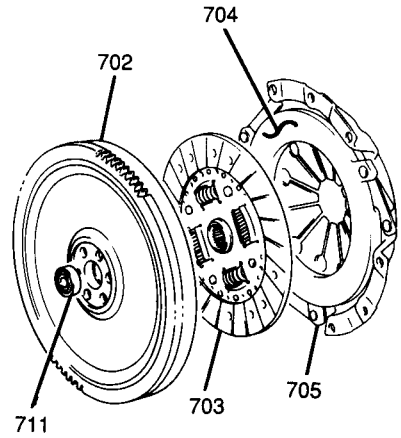

702 FLYWHEEL
703 CLUTCH DISC
704 PRESSURE PLATE
705 PRESSURE PLATE COVER
711 CLUTCH PILOT BEARING

NC7616-7C-JT-RS

Figure 16 Pressure Plate, Clutch Disc and Flywheel

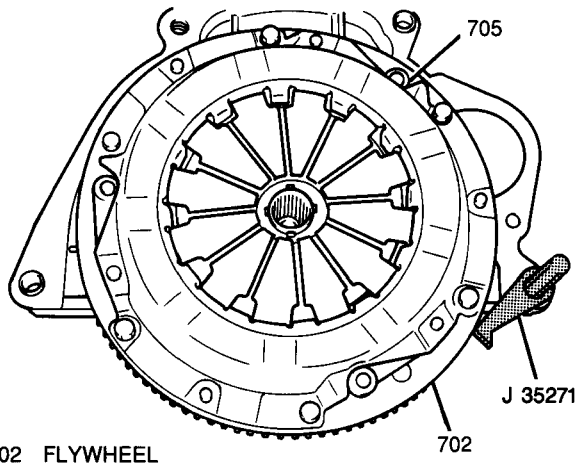

702 FLYWHEEL
705 PRESSURE PLATE COVER

NC7617-7C-JT-RS

Figure 17 Holding Flywheel Stationary

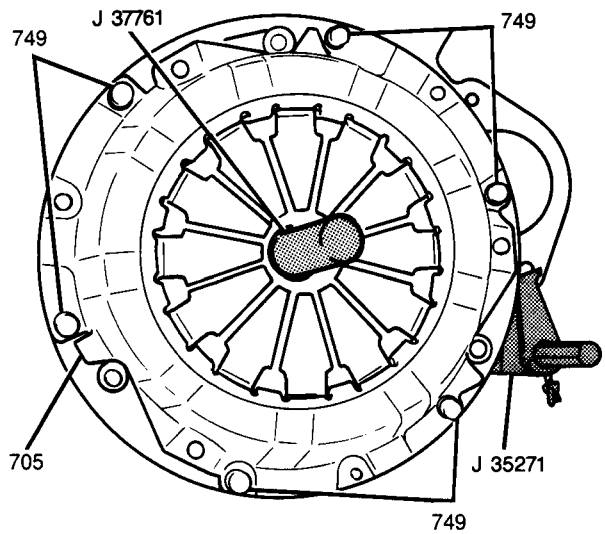

705 PRESSURE PLATE COVER
749 PRESSURE PLATE COVER BOLTS

NC7618-7C-JT-RS

Figure 18 Supporting Clutch Disc

PRESSURE PLATE, CLUTCH DISC AND FLYWHEEL

Figures 16 through 21

Remove or Disconnect

Tools Required:
J 37761 Clutch Alignment Arbor
J 35271 Flywheel Holder

1. Manual transmission assembly from vehicle. Refer to SECTION 7B.

- Install a J 35271 to the engine block in order to hold the flywheel stationary (Figure 17).
- Install a J 37761 to support the clutch disc during pressure plate removal (Figure 18).
- Slowly loosen the six pressure plate cover bolts evenly until pressure plate diaphragm spring tension is completely released.

2. Six pressure plate cover bolts and pressure plate assembly from flywheel.
3. Clutch disc and the J 37761 from flywheel.
4. The J 35271 from the engine block.

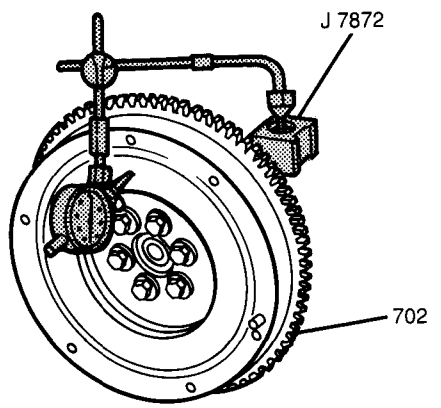

702 FLYWHEEL NC7619-7C-JT-RS

Figure 19 Measuring Flywheel Runout

Measure

Tool Required:
J 7872 Magnetic Base Indicator Set

- Flywheel for runout using a J 7872 and slowly turning the flywheel using a flywheel wrench. If flywheel runout exceeds 0.1 mm (0.004-inch), the flywheel must be resurfaced or replaced (Figure 19).

Important

- The flywheel should be indexed (reference marked) before removal to ensure correct installation. If the flywheel is installed in a position other than the one from which it was removed, poor engine balance may result.

5. Six flywheel bolts and flywheel from crankshaft noting flywheel position on crankshaft.

Important

- DO NOT use alcohol based solvents or other cleaning agents on the clutch disc. Using solvents on the clutch disc may cause slipping and premature clutch wear.

Clean

1. Flywheel and pressure plate-to-clutch disc mating surfaces of all oil, grease and metallic particles.
2. Clutch disc using a clean, dry cloth.

Inspect

1. Flywheel and pressure plate for:
   - Cracks.
   - Heat checking.
   - Grooves or excessive wear.
   - Bent or broken pressure plate fingers.
   - Weak or damaged diaphragm spring.

If any of the above conditions exist, do not attempt to disassemble or repair the pressure plate assembly. If the flywheel or pressure plate appears excessively worn, replace the flywheel and/or pressure plate as necessary.

2. Pilot bearing for smooth rotation. If the bearing does not spin freely, replace it. Refer to "Clutch Pilot Bearing" later in this section.
3. Clutch disc for:
   - Cracks.
   - Excessive wear.
   - Damaged or weak torsional springs.

Measure

Tools Required:
J 26900-5 Vernier Caliper
J 7872 Magnetic Base Indicator Set

1. Clutch disc wear by using a J 26900-5 and measuring the depth of each rivet head depression (Figure 20). Standard rivet head depth should measure 1.2 mm (0.05-inch). If the clutch rivet depth is less than 0.5 mm (0.02-inch), replace the clutch disc.

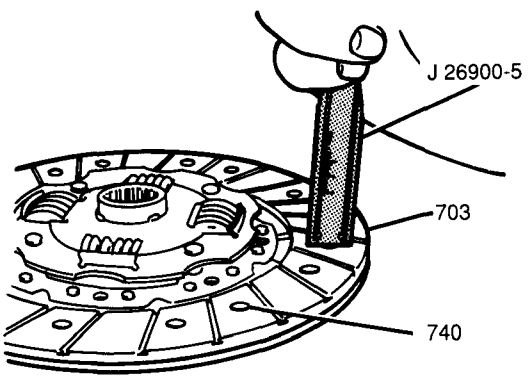

703 CLUTCH DISC
710 CLUTCH DISC RIVET NC7620-7C-JT-RS

Figure 20 Measuring Clutch Disc Rivet Depth

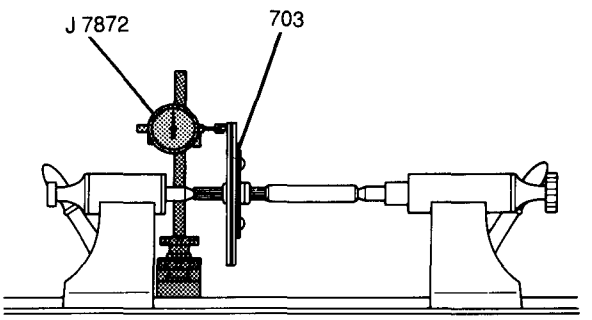

703 CLUTCH DISC NC7621-7C-JT-RS

Figure 21 Measuring Clutch Disc Runout

2. Clutch disc for runout using a J 7872. Place the disc between two horizontal arbors and turn slowly while measuring runout (Figure 21). If clutch disc runout exceeds 0.8 mm (0.031-inch), replace the clutch disc.

Install or Connect

Tools Required:
J 37761 Clutch Alignment Arbor
J 35271 Flywheel Holder

1. Flywheel to crankshaft aligning index marks made during removal; secure with six flywheel bolts.

Tighten

- Flywheel bolts to 65 N·m (48 lb.ft.).

2. The J 35271 to the engine block in order to hold the flywheel stationary (Figure 17).

Important

- When installing the clutch disc, make sure the torsional springs are offset to the rear facing the transmission.

3. Clutch disc to the flywheel using the J 37761 clutch alignment arbor to center the disc on the flywheel and support the disc in place (Figure 18).
4. Pressure plate to flywheel; secure with six pressure plate cover bolts.

Tighten

- All six pressure plate cover bolts evenly in a diagonal pattern to prevent clutch disc distortion. Then, tighten all six bolts in the same diagonal pattern to 23 N·m (17 lb.ft.).

- Remove the J 35271 from the engine block and the J 37761 from the clutch disc.
- Lubricate the transmission input shaft splines and clutch release bearing with a thin coat of wheel bearing lubricant GM P/N 1051344, or equivalent.
- Lubricate the pilot bearing with a thin coat of wheel bearing lubricant GM P/N 1051344, or equivalent.

5. Manual transmission assembly into vehicle. Refer to SECTION 7B.

CLUTCH PILOT BEARING

Figures 22 and 23

Remove or Disconnect

Tools Required:
J 34839 Pinion Bearing Remover
J 37764 Pilot Bearing Remover Adapter
J 23907 Clutch Pilot Bearing Remover

1. Manual transmission assembly from vehicle. Refer to SECTION 7B.
2. Pressure plate and clutch disc from flywheel. Refer to "Pressure Plate, Clutch Disc and Flywheel" earlier in this section.
3. Clutch pilot bearing from crankshaft using a J 34839 with a J 37764 and a J 23907 (Figure 22).

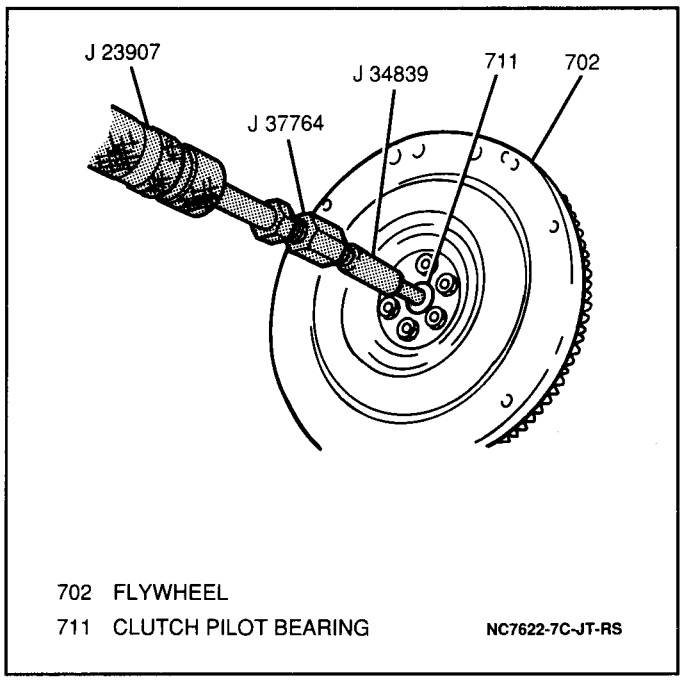

Figure 22 Removing Clutch Pilot Bearing

Inspect

- Clutch pilot bearing for scoring, binding or rough operation. Replace as necessary.

Install or Connect

Tools Required:
J 7079-2 Driver Handle
J 34848 Clutch Pilot Bearing Installer

1. Clutch pilot bearing into crankshaft using a J 34848 with a J 7079-2 (Figure 23).

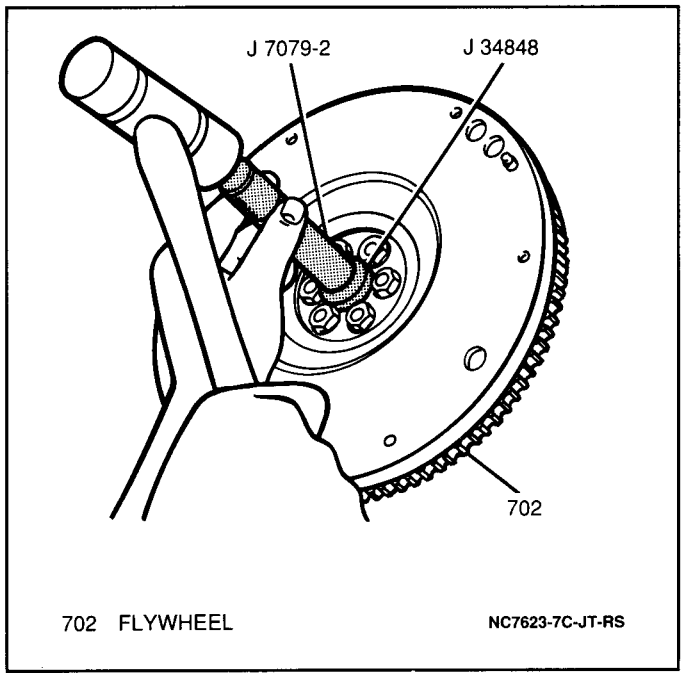

Figure 23 Installing Clutch Pilot Bearing

2. Clutch disc and pressure plate to flywheel. Refer to "Pressure Plate, Clutch Disc and Flywheel" earlier in this section.
3. Manual transmission assembly into vehicle. Refer to SECTION 7B.

CLUTCH RELEASE BEARING

Figure 24

Remove or Disconnect

1. Manual transmission assembly from vehicle. Refer to SECTION 7B.
2. Clutch release shaft return spring from clutch release shaft fork (Figure 24).

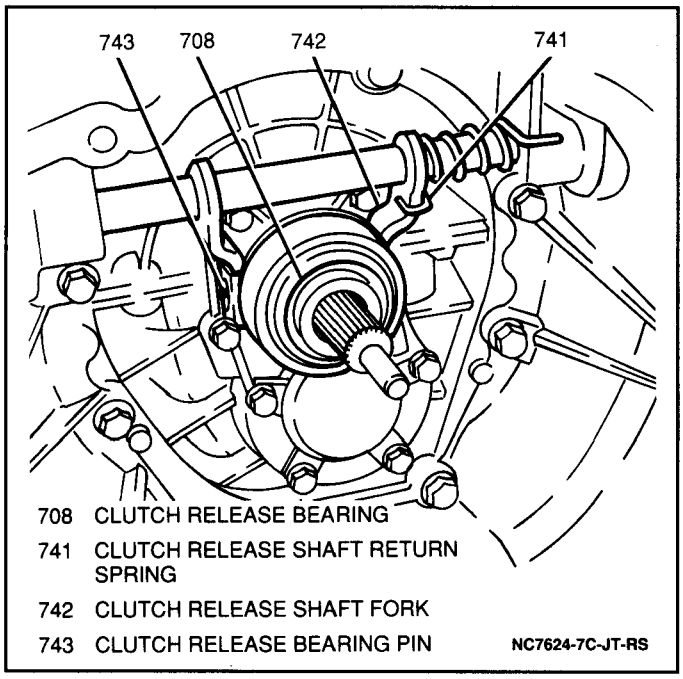

Figure 24 Removing Clutch Release Shaft Return Spring

3. Clutch release bearing pin from clutch release shaft fork and clutch release bearing from transmission input shaft (Figure 24).

Important

- DO NOT clean the clutch release bearing with degreaser or solvents. Cleaning the clutch release bearing with degreaser or solvents will damage the bearing seals. Use a clean, dry solvent free cloth.

Clean

- Clutch release bearing with a clean, dry solvent free cloth.

Inspect

- Clutch release bearing for external damage and smooth rotation. If external damage exists or bearing does not operate smoothly, replace the clutch release bearing.

Install or Connect

- Apply a thin coat of wheel bearing lubricant GM P/N 1051344, or equivalent, to the transmission input shaft.
1. Clutch release bearing onto the transmission input shaft; secure to clutch release shaft fork with clutch release bearing pin (Figure 24).
2. Clutch release shaft return spring to the clutch release shaft fork (Figure 24).
3. Manual transmission assembly into vehicle. Refer to SECTION 7B.

CLUTCH RELEASE SHAFT AND BUSHINGS

Figures 24 and 25 through 28

Remove or Disconnect

Tool Required:
J 36037 Clutch Shaft Outer Bushing Installer

1. Manual transmission assembly from vehicle. Refer to SECTION 7B.
2. Clutch release shaft return spring from clutch release shaft fork (Figure 24).
3. Clutch release bearing pin from clutch release shaft fork and clutch release bearing from transmission input shaft (Figure 24).
- Turn transmission on its left side so that the clutch release shaft is vertical.

707 CLUTCH RELEASE SHAFT
708 CLUTCH RELEASE BEARING
741 CLUTCH RELEASE SHAFT RETURN SPRING
742 CLUTCH RELEASE SHAFT FORK
743 CLUTCH RELEASE BEARING PIN
744 CLUTCH RELEASE SHAFT SEAL
745 RIGHT CLUTCH RELEASE SHAFT BUSHING
746 LEFT CLUTCH RELEASE SHAFT BUSHING
747 CLUTCH RELEASE SHAFT BUSHING PLUG

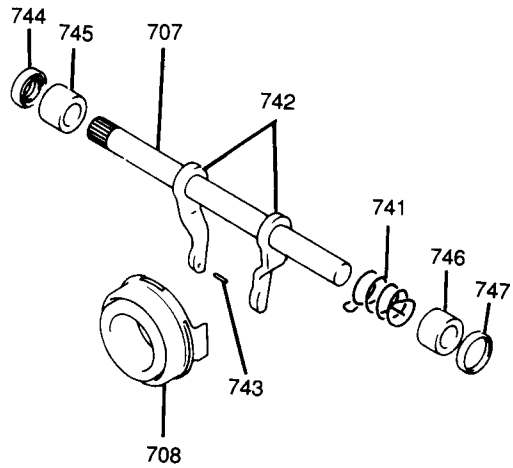

NC7625-7C-JT-RS

Figure 25 Clutch Release Shaft Components

4. Clutch release shaft seal and right clutch release shaft bushing from clutch release shaft bore in clutch housing and down on the clutch release shaft using a J 36037 until the right clutch release shaft bushing contacts the clutch release shaft fork (Figure 26).

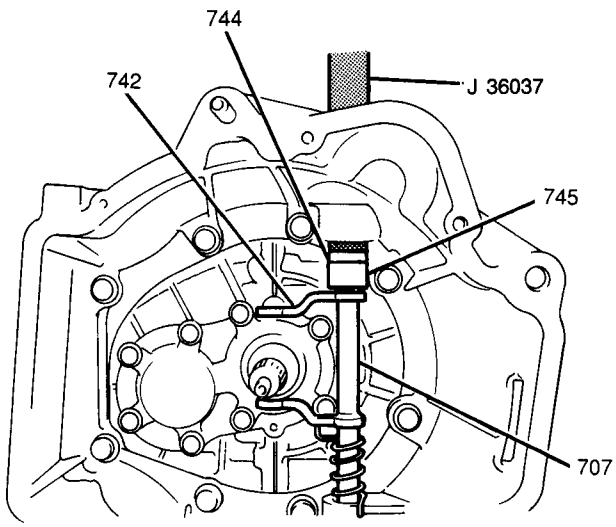

707 CLUTCH RELEASE SHAFT
742 CLUTCH RELEASE SHAFT FORK
744 CLUTCH RELEASE SHAFT SEAL
745 RIGHT CLUTCH RELEASE SHAFT BUSHING

NC7626-7C-JT-RS

Figure 26 Removing Clutch Release Shaft Seal and Right Clutch Release Shaft Bushing

5. Clutch release shaft from clutch housing.
6. Clutch release shaft seal, right clutch release shaft bushing and clutch release shaft return spring from clutch release shaft.
7. Left clutch release shaft bushing and clutch release shaft bushing plug from clutch release shaft bore in clutch housing using the J 36037 with a suitable press arbor extension and gently tapping with a hammer from the inside out (Figure 27).

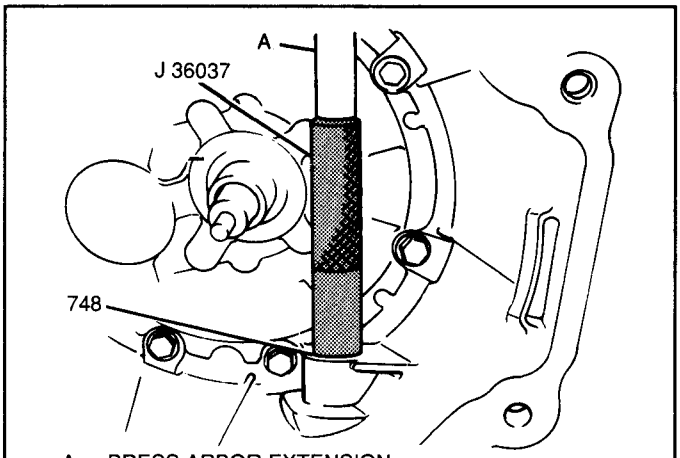

A PRESS ARBOR EXTENSION
748 CLUTCH HOUSING RELEASE SHAFT BORE

NC7627-7C-JT-RS

Figure 27 Removing Left Clutch Release Shaft Bushing and Plug

Inspect

1. Transmission input shaft bearing retainer for scoring or other damage. If the sleeve on the input shaft bearing retainer is excessively worn or damaged, replace input shaft bearing retainer. Refer to SECTION 7B-10 (2WD vehicles) or SECTION 7B-11 (4WD vehicles).
2. Clutch release shaft return spring for distortion or weakness. Replace as necessary.
3. Clutch release shaft for distortion or damage. Replace as necessary.

Install or Connect

Tool Required:
J 36037 Clutch Shaft Outer Bushing Installer

1. Clutch release shaft bushing plug and left clutch release shaft bushing into clutch housing release shaft bore using the J 36037 with a suitable press arbor extension and gently tapping with a hammer from the inside out.
2. Clutch release shaft return spring onto clutch release shaft.
3. Clutch release shaft into clutch housing.
4. Right clutch release shaft bushing and clutch release shaft seal down on the clutch release shaft and into the right clutch housing release shaft bore using a J 36037 (Figure 28).

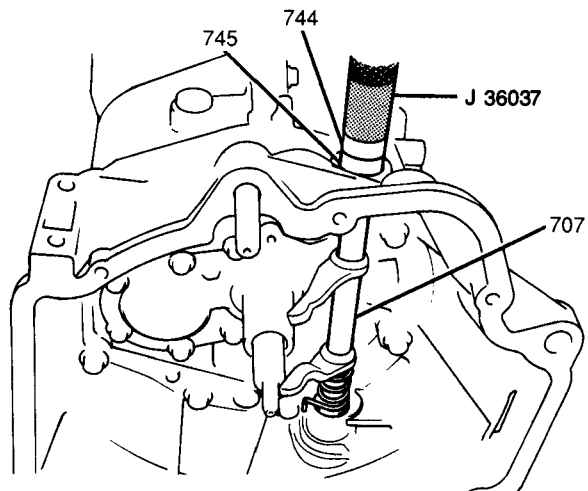

707 CLUTCH RELEASE SHAFT
744 CLUTCH RELEASE SHAFT SEAL
745 RIGHT CLUTCH RELEASE SHAFT BUSHING

NC7628-7C-JT-RS

Figure 28 Installing Right Clutch Release Shaft Bushing and Seal

- Turn transmission over so that the clutch release shaft is above the input shaft and horizontal.

5. Clutch release bearing onto transmission input shaft; secure with clutch release bearing pin.
6. Clutch release shaft return spring onto the clutch release shaft fork.
7. Manual transmission assembly into vehicle. Refer to SECTION 7B.

SPECIFICATIONS

FASTENER TORQUES

Clutch Pedal Shaft Arm Bolt and Nut	24 N·m (17 lb.ft.)
Clutch Cable Adjustment Nuts "A" and "B".	18 N·m (13 lb.ft.)
Clutch Pedal Position (CPP) Switch Locknut	13 N·m (115 lb.in.)
Clutch Cable Grommet Bolts	8 N·m (70 lb.in.)
Flywheel Bolts	65 N·m (48 lb.ft.)
Pressure Plate Cover Bolts	23 N·m (17 lb.ft.)
Negative (-) Battery Cable-to-Negative (-) Battery Terminal Retainer	15 N·m (11 lb.ft.)

CLUTCH SPECIFICATIONS

Clutch Pedal Height Difference	5 mm (0.2 in.)
Clutch Pedal Free Travel	15-25 mm (0.6-1.1 in.)
Clutch Release Lever Travel	0.5-1.5 mm (0.02-0.06 in.)
Clutch Pedal Position (CPP) Switch Adjustment Clutch Pedal Distance from floor	50-70 mm (2.0-2.7 in.)
Flywheel Runout (Maximum)	0.1 mm (0.004 in.)
Clutch Disc Rivet Head Depth	
Standard	1.2 mm (0.05 in.)
Service Limit	0.5 mm (0.02 in.)
Clutch Disc Runout (Maximum)	0.8 mm (0.031 in.)

SERVICE PARTS INFORMATION

Component Name Used in Section 7C	Reference Name in Service Parts Catalog	Group Number
Clutch Housing	Housing, Clutch	0.683
Input Shaft	Shaft, Input	4.403
Clutch Pilot Bearing	Bearing, Engine Flywheel Input Shaft w/Manual Trans	4.352
Flywheel	Flywheel, Engine W/Manual Trans	0.666
Clutch Disc	Plate, Clutch	0.886
Pressure Plate	Cover ASM, Engine Clutch	0.859
Pressure Plate Cover	Cover ASM, Engine Clutch	0.859
Diaphragm Spring	Cover ASM, Engine Clutch	0.859
Clutch Release Shaft	Shaft, Engine Clutch Release	0.795
Clutch Release Shaft Return Spring	Spring, Engine Clutch Release Return	0.796
Clutch Release Shaft Fork	Shaft, Engine Clutch Release	0.795
Clutch Release Bearing	Bearing, Engine Clutch Release	0.799
Clutch Release Bearing Pin	Pin, Engine Clutch Release Fork	0.875
Clutch Release Shaft Seal	Seal, Engine Clutch Release Shaft Oil	0.805
Right Clutch Release Shaft Bushing	Bushing, Engine Clutch Release Shaft	0.799
Left Clutch Release Shaft Bushing	Bushing, Engine Clutch Release Shaft	0.799
Clutch Release Shaft Bushing Plug	Plug, Clutch Release Shaft Bushing	0.805
Clutch Pedal Position (CPP) Switch	Switch ASM, Clutch Start	4.054
Clutch Pedal Position (CPP) Switch Locknut	Switch ASM, Clutch Start	4.054
Clutch Pedal Position (CPP) Switch Electrical Connector	Switch ASM, Clutch Start	4.054
Clutch Pedal Shaft Bushing	Bushing, Clutch Pedal Shaft	0.831
Clutch Pedal Shaft Arm	Arm, Clutch Pedal Shaft	0.830
Clutch Pedal Stop Cushion	Cushion, Clutch Pedal Return	0.829
Clutch Pedal Stop Bolt	Bolt, Clutch Pedal Height Adjuster	0.841
Clutch Pedal Stop Locknut	Nut, Clutch Pedal Height Adjuster	0.841
Clutch Pedal Shaft Arm Bolt	Bolt, Clutch Pedal Shaft Arm	0.837
Clutch Pedal Shaft Arm Nut	Nut, (M8x1.25x6.5)	8.915
Clutch Pedal Shaft	Pedal, Clutch	0.830
Clutch Pedal Return Spring Lever	Spring ASM, Clutch Pedal	0.844
Clutch Pedal Return Spring	Spring ASM, Clutch Pedal	0.844
Clutch Pedal	Pedal, Clutch	0.830
Clutch Release Lever	Arm, Engine Clutch Release Shaft	0.796
Clutch Release Lever Adjustment Nut	Nut, Engine Clutch Cable to Lever Mounting	0.854
Clutch Cable	Cable ASM, Engine Clutch	0.854
Clutch Cable Bracket	Bracket, Clutch Cable	0.855
Clutch Cable Adjustment Nut "A"	Cable ASM, Engine Clutch	0.854

Clutch Cable Adjustment Nut "B"	Cable ASM, Engine Clutch	0.854
Upper Clutch Cable Clamp	Clamp, Clutch Cable No.1	0.854
Lower Clutch Cable Clamp	Clamp, Clutch Cable No.2	0.854
Clutch Cable Clevis	Cable ASM, Engine Clutch	0.854
Clutch Cable Grommet Bolts	Bolt, Engine Clutch Cable (6x1x16)	0.854

SPECIAL TOOLS

1
J 39200

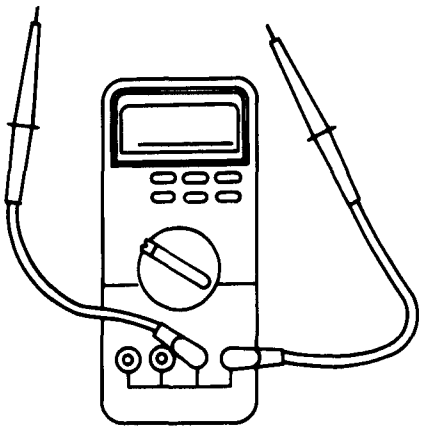

4
J 7872

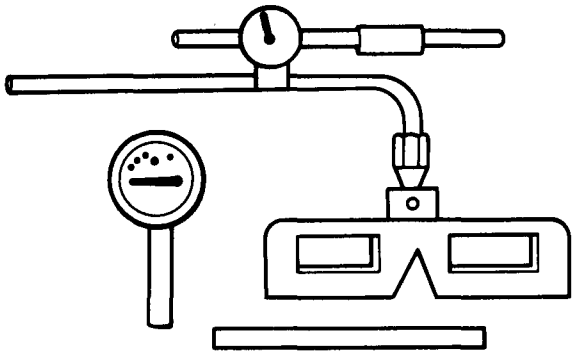

2
J 37761

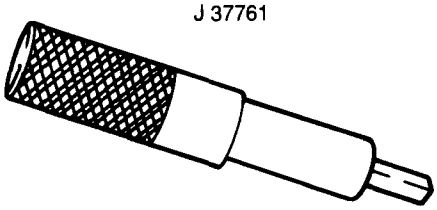

5
J 26900-5

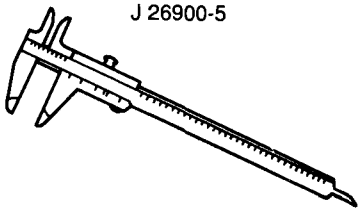

3
J 35271

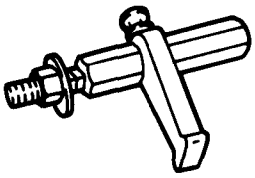

6
J 34839

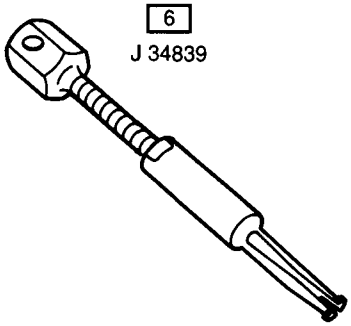

7
J 37764

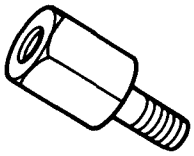

1 DIGITAL MULTIMETER
2 CLUTCH ALIGNMENT ARBOR
3 FLYWHEEL HOLDER
4 MAGNETIC BASE INDICATOR SET
5 VERNIER CALIPER
6 PINION BEARING REMOVER
7 PILOT BEARING REMOVER ADAPTER

PC7629-7C-JT-RS

8
J 23907

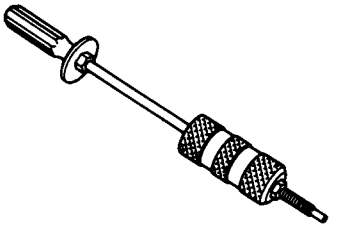

10
J 34848

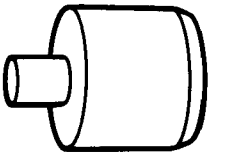

9
J 7079-2

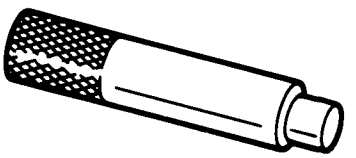

11
J 36037

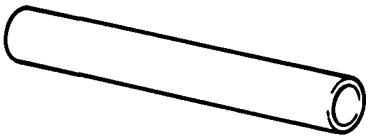

8 CLUTCH PILOT BEARING REMOVER
9 DRIVER HANDLE
10 CLUTCH PILOT BEARING INSTALLER
11 CLUTCH SHAFT OUTER BUSHING INSTALLER

NC7630-7C-JT-RS

SECTION 7D

TRANSFER CASE

NOTICE: When fasteners are removed, always reinstall them at the same location from which they were removed. If a fastener needs to be replaced, use the correct part number fastener for that application. If the correct part number fastener is not available, a fastener of equal size and strength (or stronger) may be used. Fasteners that are not reused, and those requiring thread-locking compound, will be called out. The correct torque values must be used when installing fasteners that require them. If the above procedures are not followed, parts or system damage could result.

CONTENTS

General Description 7D-1
Operation 7D-3
Diagnosis 7D-6
Oil Leak Diagnosis 7D-7
General Method 7D-7
Powder Method 7D-7
Dye and Black Light Method 7D-7
Transfer Case Oil Leak Repair 7D-9
Case Porosity Repair 7D-9
On-Vehicle Service 7D-9
Checking Transfer Case Oil Level 7D-9
Changing Transfer Case Oil 7D-10
Transfer Case Skid Plate 7D-10
Gearshift Control Lever 7D-11
Four-Wheel Drive Switch 7D-11
Speedometer Driven Gear 7D-12
Speedometer Cable 7D-13
Front Output Shaft Oil Seal 7D-14
Rear Output Shaft Oil Seal 7D-15
Torque Stopper Bushing 7D-16
Transfer Case Rear Mount 7D-18
Transfer Case Assembly 7D-19
Unit Repair 7D-21
Transfer Case Disassembly 7D-21
Transfer Case Assembly 7D-32
Specifications 7D-41
Fastener Torques 7D-41
Transfer Case Specifications 7D-41
Fluid Capacities 7D-41
Service Parts Information 7D-41
Special Tools 7D-44

GENERAL DESCRIPTION

The transfer case, located at the rear of the transmission, is responsible for transferring engine torque to the front and rear wheels on vehicles equipped with four-wheel drive. The transfer case contains an input gear, countershaft and counter gear, rear output shaft, low output gear and a front output shaft (for front drive) connected and driven by a drive chain.

The transfer case gearshift control lever can be placed in four positions: "4H" (direct connection with the transmission output shaft), "4L" (speed reduction by the input gear, counter gear and low output gear), "N" (by way of the reduction clutch sleeve located between the input gear and the low output gear) and "2H" (high speed to the rear wheels only). The front drive shift fork mechanism also has an auxiliary spring to ensure a smooth shift from "4H" to "2H."

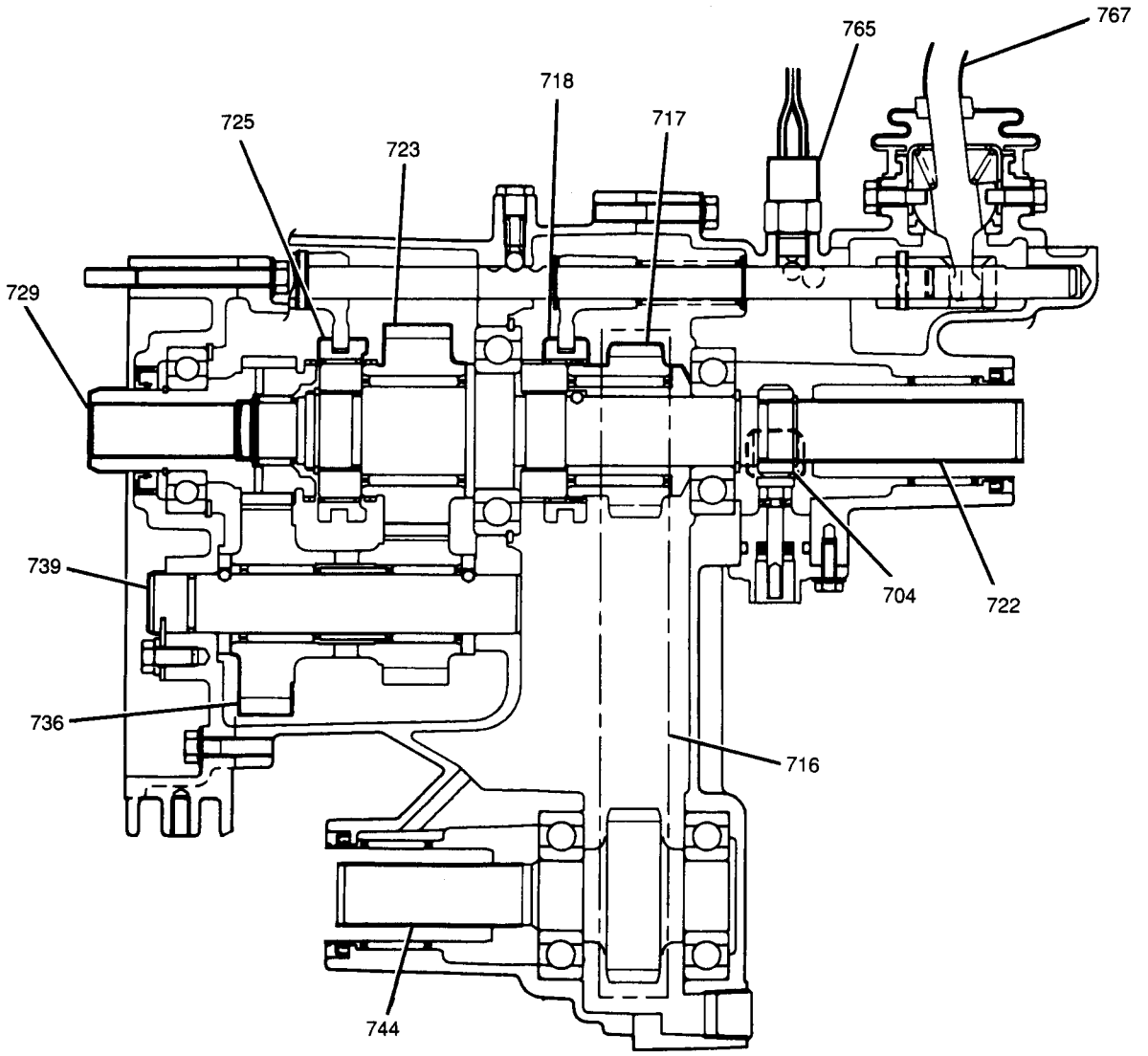

704 SPEEDOMETER DRIVEN GEAR
716 DRIVE CHAIN
717 DRIVE SPROCKET
718 FRONT DRIVE CLUTCH SLEEVE
722 REAR OUTPUT SHAFT
723 LOW OUTPUT GEAR
725 REDUCTION CLUTCH SLEEVE
729 INPUT GEAR
736 COUNTER GEAR
739 COUNTERSHAFT
744 FRONT OUTPUT SHAFT
765 FOUR-WHEEL DRIVE SWITCH
767 GEARSHIFT CONTROL LEVER

NC7701-7D-JT-RS

Figure 1 Transfer Case Cross Section

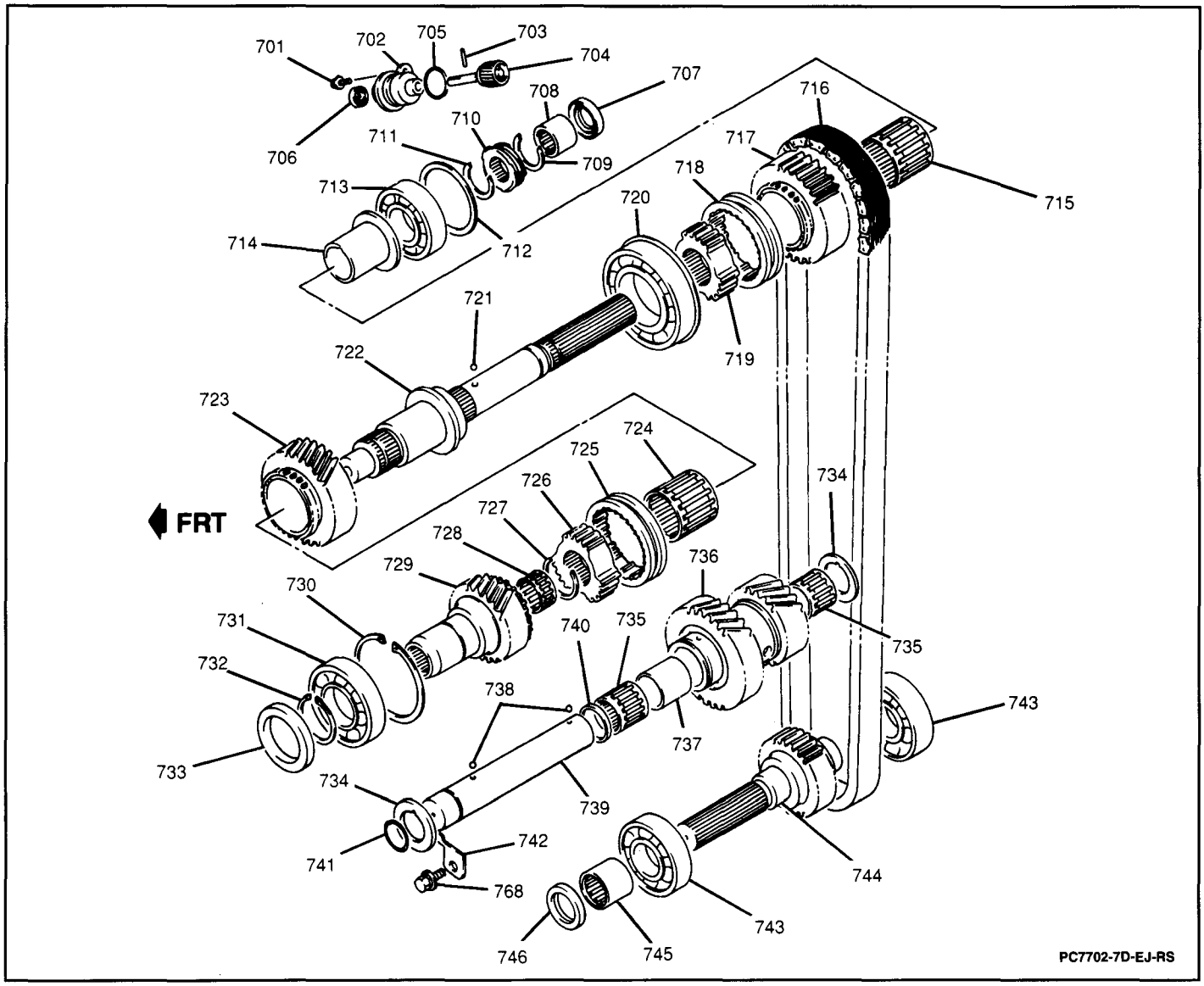

Figure 2 Transfer Case Internal Components

OPERATION

Figure 4

Two-Wheel Drive Operation

When the transfer case gearshift control lever is placed in the "2H" position, the reduction shift fork moves the reduction clutch sleeve forward. This action engages the transfer case input gear with the rear output shaft. In this manner, torque applied from the transmission output shaft flows in a 1:1 ratio through the transfer case to only the rear propeller shaft (Figure 4).

High Speed Four-Wheel Drive Operation

When the transfer case gearshift control lever is placed in the "4H" position, the reduction shift fork moves the reduction clutch sleeve forward. This action engages the transfer case input gear with the rear output shaft. In this manner, torque applied from the transmission output shaft flows in a 1:1 ratio through the transfer case to the rear propeller shaft.

Additionally, the front drive shift fork moves the front drive clutch sleeve backward. This action engages the front drive clutch hub with the drive sprocket. Once engaged, the drive sprocket turns the drive chain and applies torque through the front output shaft to the front propeller shaft (Figure 4).

701 SPEEDOMETER DRIVEN GEAR CASE RETAINING BOLT
702 SPEEDOMETER DRIVEN GEAR CASE
703 SPEEDOMETER DRIVEN GEAR CASE ROLL PIN
704 SPEEDOMETER DRIVEN GEAR
705 SPEEDOMETER DRIVEN GEAR CASE O–RING
706 SPEEDOMETER DRIVEN GEAR LIP SEAL
707 REAR OUTPUT SHAFT OIL SEAL
708 REAR OUTPUT SHAFT NEEDLE BEARING
709 SPEEDOMETER DRIVE GEAR C–CLIP
710 SPEEDOMETER DRIVE GEAR
711 REAR OUTPUT SHAFT REAR BEARING C–CLIP
712 SELECTIVE SHIM
713 REAR OUTPUT SHAFT REAR BEARING
714 DRIVE SPROCKET BUSHING
715 DRIVE SPROCKET NEEDLE BEARING
716 DRIVE CHAIN
717 DRIVE SPROCKET
718 FRONT DRIVE CLUTCH SLEEVE
719 FRONT DRIVE CLUTCH HUB
720 REAR OUTPUT SHAFT FRONT BEARING
721 REAR OUTPUT SHAFT WASHER BALL
722 REAR OUTPUT SHAFT
723 LOW OUTPUT GEAR
724 LOW OUTPUT GEAR NEEDLE BEARING
725 REDUCTION CLUTCH SLEEVE
726 REDUCTION CLUTCH HUB
727 REDUCTION CLUTCH HUB C–CLIP
728 INPUT GEAR NEEDLE BEARING
729 INPUT GEAR
730 INPUT GEAR BEARING C–CLIP
731 INPUT GEAR BEARING
732 INPUT GEAR C–CLIP
733 INPUT GEAR OIL SEAL
734 COUNTERSHAFT WASHER
735 COUNTERSHAFT NEEDLE BEARING
736 COUNTER GEAR
737 COUNTERSHAFT SPACER
738 COUNTERSHAFT WASHER BALL
739 COUNTERSHAFT
740 COUNTERSHAFT FRICTION RING
741 COUNTERSHAFT O–RING
742 COUNTERSHAFT CASE PLATE
743 FRONT OUTPUT SHAFT BEARING
744 FRONT OUTPUT SHAFT
745 FRONT OUTPUT SHAFT NEEDLE BEARING
746 FRONT OUTPUT SHAFT OIL SEAL
768 COUNTERSHAFT CASE PLATE BOLT

PC7799-7D-EJ-RS

Figure 3 Transfer Case Internal Components – Legend

Low Speed Four-Wheel Drive Operation

When the transfer case gearshift control lever is placed in the "4L" position, the reduction shift fork moves the reduction clutch sleeve backward. This action engages the input gear with the low output gear – lowering the output gear ratio considerably.

At the same time, the front drive shift fork moves the front drive clutch sleeve backward. This action engages the front drive clutch hub with the drive sprocket. Once engaged, the drive sprocket turns the drive chain and provides torque through the front output shaft to the front propeller shaft (Figure 4).

Neutral "N" Position

When the transfer case gearshift control lever is placed in the "N" position, the reduction shift fork moves the reduction clutch sleeve to the neutral position between the input gear and the low output gear. This action disengages the input gear from the rear output shaft and interrupts the torque flow to the front or rear output shafts (Figure 4).

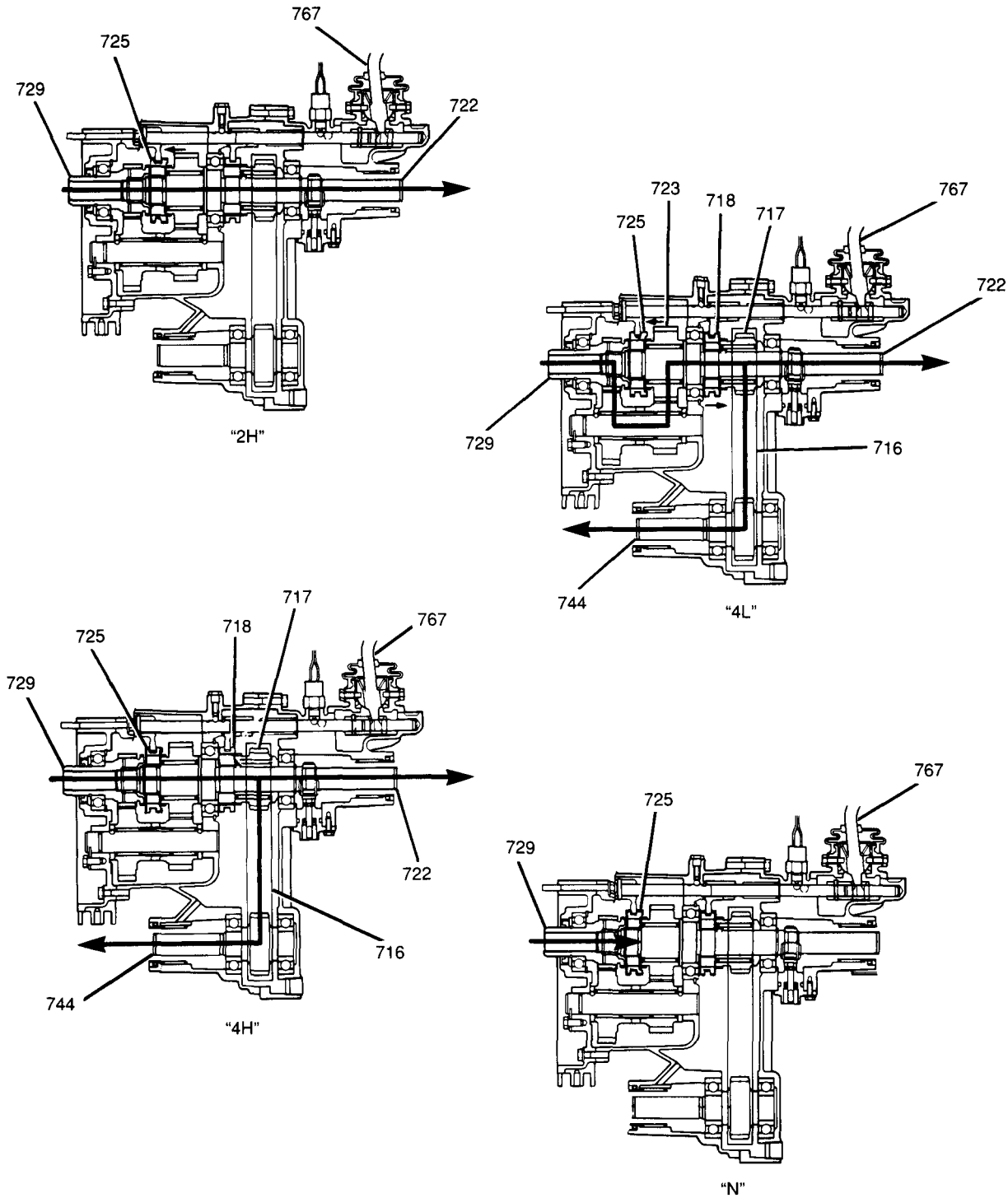

716	DRIVE CHAIN	725	REDUCTION CLUTCH SLEEVE
717	DRIVE SPROCKET	729	INPUT GEAR
718	FRONT DRIVE CLUTCH SLEEVE	744	FRONT OUTPUT SHAFT
722	REAR OUTPUT SHAFT	767	GEARSHIFT CONTROL LEVER
723	LOW OUTPUT GEAR		

NC7703-7D-JT-RS

Figure 4 Transfer Case Operation

DIAGNOSIS

Before attempting to repair the transfer case or related components for any reason other than mechanical failure, the condition and probable causes should be identified. Transfer case failures are revealed by shifting difficulties such as excessive shifting effort, gear clash, or gear grinding. When any of these conditions occur, the following inspections should be made before disassembling the transfer case.

Inspect

1. Transfer case oil level for insufficient or incorrect oil. Refer to "Checking Transfer Case Oil Level" later in this section.
2. Transfer case mounts for wear or looseness. Refer to "Torque Stopper Bushing" or "Transfer Case Rear Mount" later in this section.
3. Gearshift control lever for distortion or excessive wear. Refer to "Gearshift Control Lever" later in this section.

After performing the above inspections, refer to the "Transfer Case Diagnosis Chart" for diagnosis of transfer case noise and shifting difficulties under various conditions (Figure 5).

CONDITION	INSPECT COMPONENT	FOR PROBABLE CAUSE
TRANSFER CASE NOISY IN ALL GEARSHIFT CONTROL LEVER POSITIONS	TRANSFER CASE OIL LEVEL	INSUFFICIENT OR IMPROPER LUBRICANT
	TIRES	WEAR, UNDER INFLATION OR IMPROPER SIZE
	INPUT GEAR BEARING	WEAR OR DAMAGE
	REAR OUTPUT SHAFT BEARINGS	WEAR OR DAMAGE
TRANSFER CASE DIFFICULT TO SHIFT OR WILL NOT SHIFT INTO DESIRED RANGE	TRANSFER CASE OIL LEVEL	INSUFFICIENT OR IMPROPER LUBRICANT
	REDUCTION SHIFT SHAFT	BINDING IN CENTER OR REAR CASE
	FRONT DRIVE SHIFT SHAFT	BINDING IN CENTER OR REAR CASE
	FRONT DRIVE SHIFT FORK SPRING, C–CLIP OR SHAFT STOP WASHER	WEAKNESS, DISTORTION OR MISPOSITIONED
GRINDING NOISE OR TRANSFER CASE JUMPS OUT OF "4H" OR "4L"	FRONT DRIVE CLUTCH SLEEVE	EXCESSIVE WEAR OR DAMAGE
	REDUCTION CLUTCH SLEEVE	EXCESSIVE WEAR OR DAMAGE
	DRIVE SPROCKET CLUTCHING TEETH	EXCESSIVE WEAR OR DAMAGE
	REDUCTION CLUTCH HUB	EXCESSIVE WEAR OR DAMAGE
FOUR-WHEEL DRIVE WILL NOT ENGAGE	MANUAL LOCKING FRONT HUBS	HUB DIALS IN "FREE" POSITION
	AUTOMATIC LOCKING FRONT HUBS	EXCESSIVE WEAR OR DAMAGE

NC7704-7D-JT-RS

Figure 5 Transfer Case Diagnosis Chart

OIL LEAK DIAGNOSIS

Figure 6

Most transfer case oil leaks can be located without removing the transfer case from the vehicle. Methods most commonly used to locate leaks are the general method, the powder method, and the dye and black light method.

The transfer case components are constructed of aluminum and separated into four pieces: the front case, the center case, the rear case and the gearshift lever case. If a leak exists between any of the transfer case components, the transfer case must be removed from the vehicle for repair. Refer to "Unit Repair" later in this section for transfer case unit repair procedures.

General Method

1. Verify that the leak is transfer case oil.
2. Thoroughly clean the suspected leak area.
3. Drive the vehicle for 24 km (15 miles) or until normal operating temperatures are reached.
4. Park the vehicle over clean paper or cardboard.
5. Turn the ignition switch to the "OFF" position and wait approximately 30 minutes.
6. Inspect paper for spots in relation to its position under the transfer case assembly.
7. Make the necessary repairs.

Powder Method

1. Thoroughly clean the suspected leak area with solvent.
2. Apply an aerosol powder or baby powder to the suspected leak area.
3. Drive the vehicle for 24 km (15 miles) or until normal operating temperatures are reached.
4. Turn the ignition switch to the "OFF" position.
5. Inspect the suspected leak area and trace the leak path through the powder to find the source.
6. Make the necessary repairs.

Dye and Black Light Method

Tools Required:
J 28428-D High Intensity Black Light
J 28431-6 Fluorescent Oil Additive

1. Raise and suitably support vehicle. Refer to SECTION 0A.
2. Add 30 ml (1 oz.) of J 28431-6 into the transfer case oil level/filler plug.
3. Lower vehicle.
4. Drive vehicle for 24 km (15 miles) or until normal operating temperatures are reached..
5. Turn the ignition switch to the "OFF" position.
6. Raise and suitably support vehicle. Refer to SECTION 0A.
7. Using a J 28428-D, locate the source of the leak.
8. Make the necessary repairs.

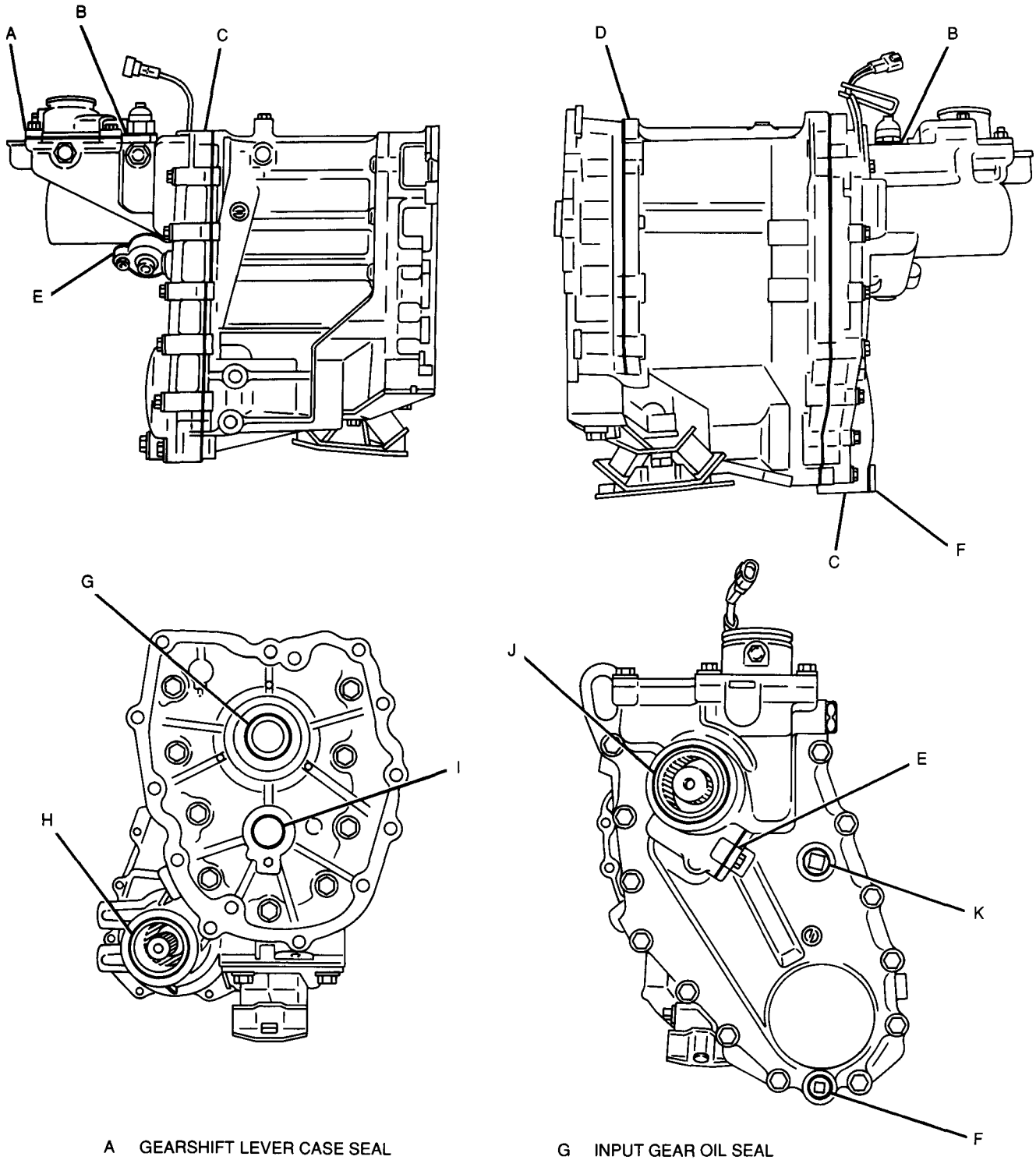

A	GEARSHIFT LEVER CASE SEAL	G	INPUT GEAR OIL SEAL
B	FOUR–WHEEL DRIVE SWITCH O–RING	H	FRONT OUTPUT SHAFT OIL SEAL
C	REAR CASE-TO-CENTER CASE SEAL	I	COUNTERSHAFT O–RING
D	FRONT CASE-TO-CENTER CASE SEAL	J	REAR OUTPUT SHAFT OIL SEAL
E	SPEEDOMETER DRIVEN GEAR CASE O-RING	K	TRANSFER CASE OIL LEVEL/FILLER PLUG
F	TRANSFER CASE DRAIN PLUG		

NC7705-7D-JT-RS

Figure 6 Possible Points of Oil Leaks

TRANSFER CASE OIL LEAK REPAIR

Once the leak has been located, its cause must be determined in order to carry out the proper repair. For example, if a case component is resealed but the mating surface is damaged, resealing will not repair the leak. The damaged mating surface must be repaired or replaced.

Before any repairs are attempted, however, always check for the following conditions:

Important

- The transfer case does not use gaskets to seal major case components. RTV silicone sealer GM P/N 1052917, or equivalent, should be used where applicable.

- Oil level is too high.
- Plugged breather vent.
- Improperly torqued fasteners, dirty or damaged threads.
- Warped flanges or mating surfaces.
- Scratches, burrs or other damage to mating surfaces.
- Insufficient or excessive amounts of sealer.
- Cracking or porosity of the component.
- Improper sealant used where applicable.
- Damaged seal bore.
- Damaged or worn seal.
- Scratched, nicked or damaged propeller shaft surfaces.
- Loose or worn bearing causing excessive seal wear.

CASE POROSITY REPAIR

1. Drive the vehicle for 24 km (15 miles) or until normal operating temperatures are reached.
2. Turn the ignition switch to the "OFF" position.
3. Clean the leak area with solvent and air dry.

   CAUTION: Epoxy cement may cause skin irritation and eye damage. Read and follow all information on the container label as provided by the manufacturer.

4. Mix a sufficient amount of epoxy cement GM P/N 1052533, or equivalent, following the manufacturer's recommendations.
5. While the transfer case is hot, apply epoxy cement with a clean, dry soldering acid brush.
6. Allow the epoxy to cure for three hours before starting the engine.
7. Repeat the fluid leak diagnosis procedure to verify the repair.

ON-VEHICLE SERVICE

CHECKING TRANSFER CASE OIL LEVEL

Figure 7

1. Raise and suitably support vehicle. Refer to SECTION 0A.
2. Remove transfer case oil level/filler plug from transfer case (Figure 7).

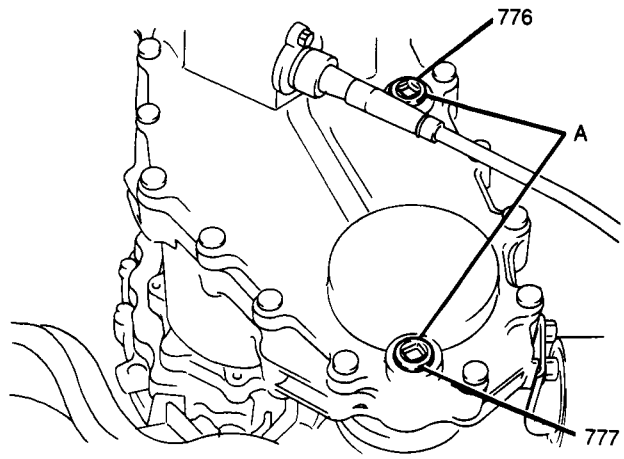

A APPLY LOCTITE® PIPE SEALANT GM P/N 1052080, OR EQUIVALENT
776 TRANSFER CASE OIL LEVEL/FILLER PLUG
777 TRANSFER CASE DRAIN PLUG
NC7706-7D-JT-RS

Figure 7 Transfer Case Oil Level/Filler and Drain Plugs

Inspect

- Transfer case oil level. Oil level should be even with the bottom of the oil level/filler plug hole. If the oil level is below the bottom of the oil level/filler plug hole, adjust oil level accordingly with synthetic 75W-90 GL4 lubricant GM P/N 12345871, or equivalent, until the oil level reaches the bottom of the oil level/filler plug hole (Figure 7).

3. Apply Loctite® pipe sealant GM P/N 1052080, or equivalent, to the threaded portion of the transfer case oil level/filler plug.
4. Install transfer case oil level/filler plug into transfer case (Figure 7).

   Tighten

   - Transfer case oil level/filler plug to 28 N·m (21 lb.ft.).

5. Lower vehicle.

CHANGING TRANSFER CASE OIL

Figures 7 and 8

1. Raise and suitably support vehicle. Refer to SECTION 0A.

Important

- It is not necessary to remove the transfer case skid plate in order to gain access to the transfer case drain plug. An access opening in the transfer case skid plate has been provided for wrench access as well as transfer case oil drainage (Figure 8).

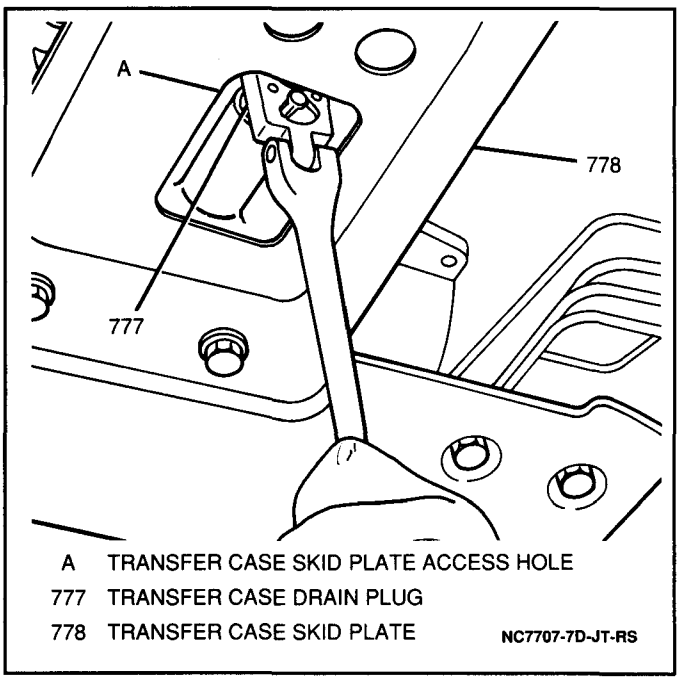

Figure 8 Removing Transfer Case Drain Plug

2. Place a drain pan or suitable container underneath transfer case.
3. Remove transfer case oil level/filler plug from transfer case (Figure 7).
4. Remove transfer case drain plug from transfer case and drain transfer case oil (Figure 8).
5. Apply Loctite® pipe sealant GM P/N 1052080, or equivalent, to the threaded portion of the transfer case drain plug.
6. Transfer case drain plug into transfer case (Figure 8).

Tighten

- Transfer case drain plug to 28 N·m (21 lb.ft.).

7. Add approximately 1.7 liters (1.8 qts.) of synthetic 75W-90 GL4 lubricant GM P/N 12345871, or equivalent, into the oil level/filler plug hole. Oil level should be even with the bottom of the oil level/filler plug hole.
8. Apply Loctite® pipe sealant GM P/N 1052080, or equivalent, to the threaded portion of the transfer case oil level/filler plug.
9. Transfer case oil level/filler plug into transfer case (Figure 7).

Tighten

- Transfer case oil level/filler plug to 28 N·m (21 lb.ft.).

10. Lower vehicle.

TRANSFER CASE SKID PLATE

Figure 9

Remove or Disconnect

- Raise and suitably support vehicle. Refer to SECTION 0A.

1. Two bolts and transfer case skid plate from transfer case crossmember (Figure 9).

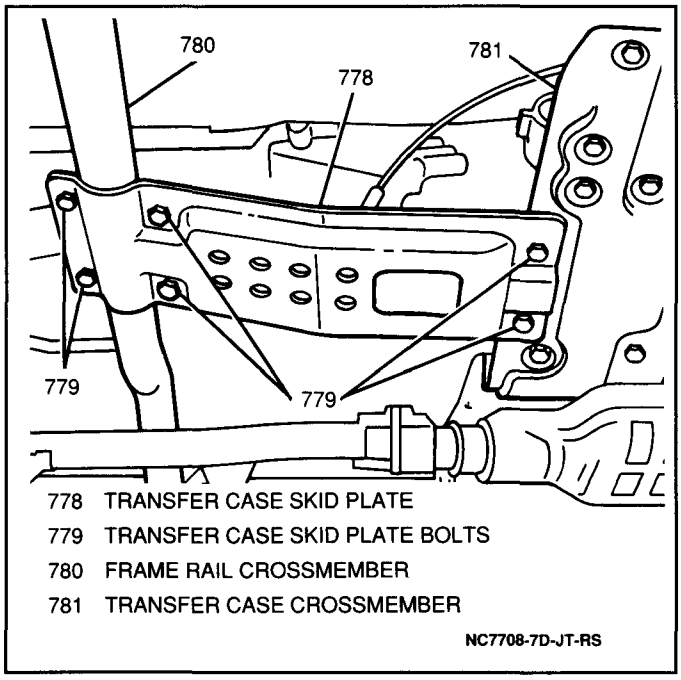

Figure 9 Transfer Case Skid Plate

2. Four bolts and transfer case skid plate from frame rail crossmember (Figure 9).

Inspect

- Transfer case skid plate for distortion or damage. Replace as necessary.

Install or Connect

1. Transfer case skid plate to frame rail crossmember; secure with four bolts (Figure 9).
2. Transfer case skid plate to transfer case crossmember; secure with two bolts (Figure 9).

Tighten

- Transfer case skid plate bolts to 54 N·m (40 lb.ft.).

- Lower vehicle.

GEARSHIFT CONTROL LEVER

Figures 10, 11 and 12

Remove or Disconnect

1. Two screws, two plastic retainers and console box from floor.
2. One screw and gearshift control lever knob from gearshift control lever (Figure 10).

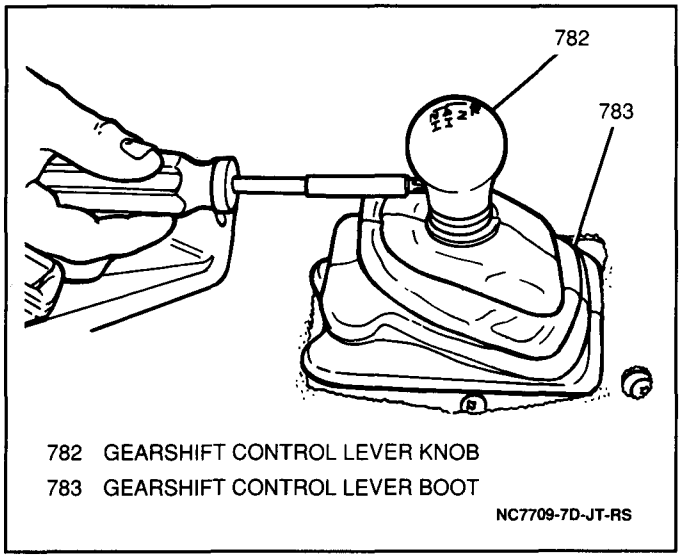

Figure 10 Removing Gearshift Control Lever Knob

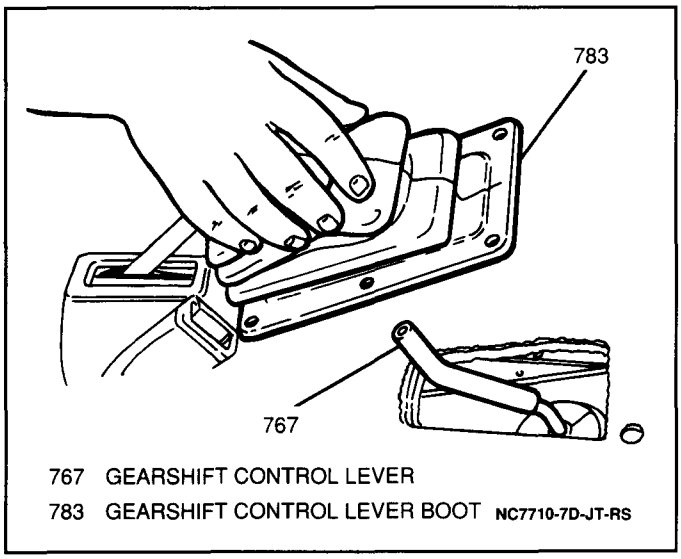

Figure 11 Removing Gearshift Control Lever Boot

3. Six screws, boot cover and gearshift control lever boot from gearshift control lever (Figure 11).
4. One clamp and gearshift lever case boot from gear shift lever case.
5. Gearshift control lever from gearshift lever case by pushing down on the gearshift control lever pivot and turning counterclockwise 90 degrees (1/4 turn) and lifting up (Figure 12).

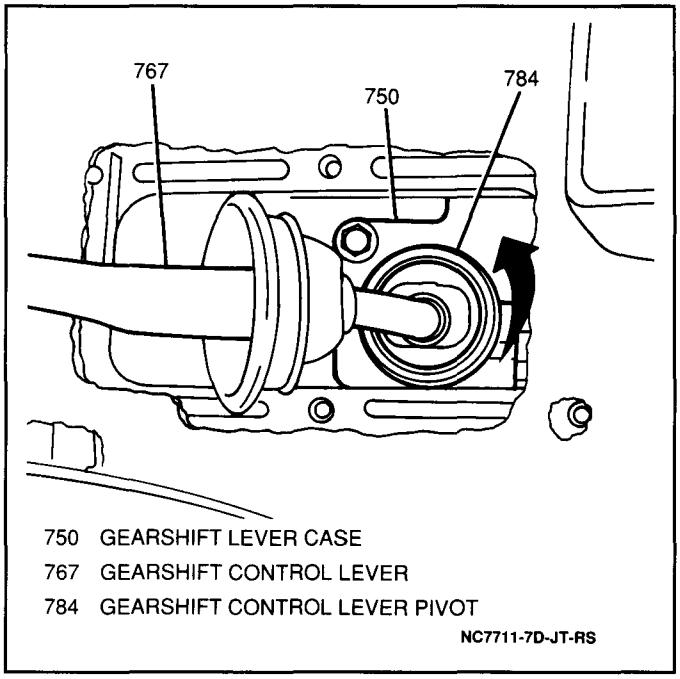

Figure 12 Removing Gearshift Control Lever

Inspect

1. Gearshift control lever for distortion or excessive wear. Replace as necessary.
2. Gearshift control lever boot and gearshift lever case cover boot for tears or other damage. Replace as necessary.

Install or Connect

1. Gearshift control lever into gearshift lever case and pushing down on the shift control lever pivot and turning clockwise 90 degrees (1/4 turn) and releasing.
2. Gearshift lever case boot to gearshift lever case; secure with one clamp.
3. Gearshift control lever boot and boot cover onto gearshift control lever; secure with six screws (Figure 11).
4. Gearshift control lever knob onto gearshift control lever; secure with one screw (Figure 10).
5. Console box to floor; secure with two plastic retainers and two screws.

FOUR-WHEEL DRIVE SWITCH

Figures 10 through 13

For four-wheel drive switch diagnosis procedures, refer to SECTION 8A.

Remove or Disconnect

1. Negative (-) battery cable.
2. Two screws, two plastic retainers and console box from floor.
3. One screw and gearshift control lever knob from gearshift control lever (Figure 10).

4. Six screws, boot cover and gearshift control lever boot from gearshift control lever (Figure 11).
5. One clamp and gearshift lever case boot from gear shift lever case.
6. Gearshift control lever from gearshift lever case by pushing down on the gearshift control lever pivot and turning counterclockwise 90 degrees (1/4 turn) and lifting up (Figure 12).
7. Four-wheel drive switch electrical connector from four-wheel drive switch (Figure 13).

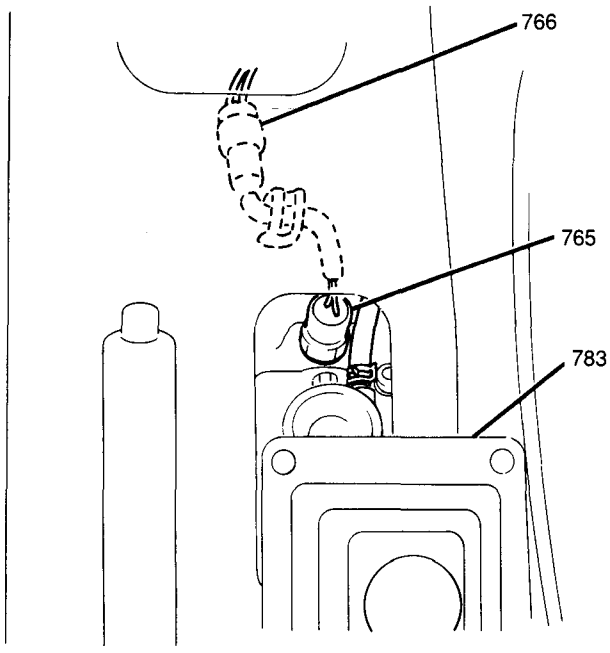

765 FOUR-WHEEL DRIVE SWITCH
766 FOUR-WHEEL DRIVE SWITCH ELECTRICAL CONNECTOR
783 GEARSHIFT CONTROL LEVER BOOT
NC7712-7D-JT-RS

Figure 13 Four-Wheel Drive Switch

8. Four-wheel drive switch from transfer case by turning counterclockwise (Figure 13).

Inspect

- Four-wheel drive switch O-ring for cuts or other damage. Replace as necessary.

Install or Connect

1. Four-wheel drive switch into transfer case by turning clockwise (Figure 13).

Tighten

- Four-wheel drive switch to 19 N·m (14 lb.ft.).

2. Four-wheel drive switch electrical connector to four-wheel drive switch (Figure 13).
3. Gearshift control lever into gearshift lever case and pushing down on the shift control lever pivot and turning clockwise 90 degrees (1/4 turn) and releasing.
4. Gearshift lever case boot to gearshift lever case; secure with one clamp.
5. Gearshift control lever boot and boot cover onto gearshift control lever; secure with six screws (Figure 11).
6. Gearshift control lever knob onto gearshift control lever; secure with one screw (Figure 10).
7. Console box to floor; secure with two plastic retainers and two screws.
8. Negative (-) battery cable.

Tighten

- Negative (-) battery cable-to-negative (-) battery terminal retainer to 15 N·m (11 lb.ft.).

SPEEDOMETER DRIVEN GEAR

Figures 14 through 17

Remove or Disconnect

- Raise and suitably support vehicle. Refer to SECTION 0A.

1. Speedometer cable from speedometer driven gear case (Figure 14).

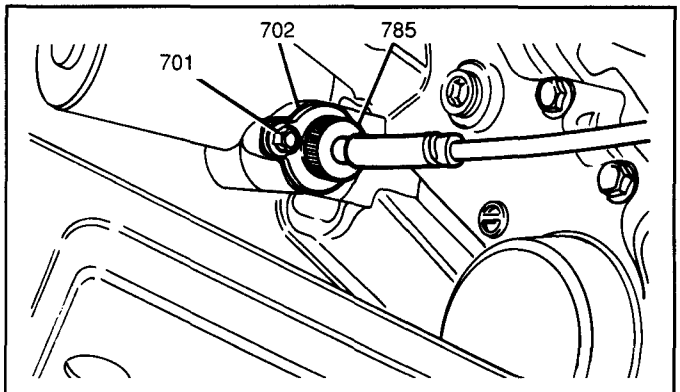

701 SPEEDOMETER DRIVEN GEAR CASE RETAINING BOLT
702 SPEEDOMETER DRIVEN GEAR CASE
785 SPEEDOMETER CABLE
NC7713-7D-JT-RS

Figure 14 Speedometer Cable at Speedometer Driven Gear Case

2. Retaining bolt and speedometer driven gear case from transfer case (Figure 14).
3. One roll pin and speedometer driven gear from speedometer driven gear case (Figure 15).

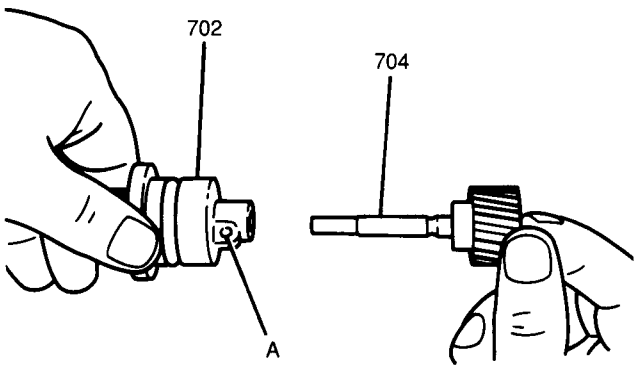

A ROLL PIN CAVITY (ROLL PIN REMOVED)
702 SPEEDOMETER DRIVEN GEAR CASE
704 SPEEDOMETER DRIVEN GEAR
NC7714-7D-JT-RS

Figure 15 Removing Speedometer Driven Gear

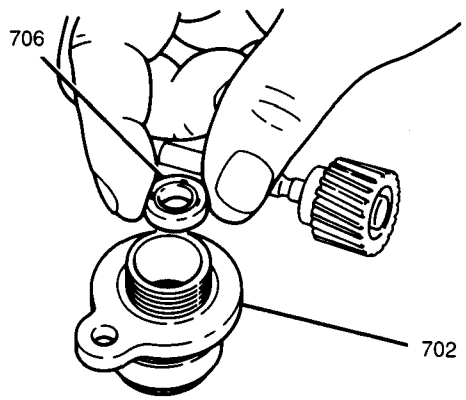

702 SPEEDOMETER DRIVEN GEAR CASE
706 SPEEDOMETER DRIVEN GEAR LIP SEAL
NC7715-7D-JT-RS

Figure 16 Removing Speedometer Driven Gear Lip Seal

4. Speedometer driven gear lip seal from speedometer driven gear case (Figure 16).

Inspect

1. Speedometer driven gear for excessive wear or damage. Replace as necessary.

Install or Connect

Tools Required:
J 34833 Valve Guide Remover
J 36850 Transjel® Transmission Assembly Lubricant

- Apply J 36850 to the new speedometer driven gear lip seal.

1. New speedometer driven gear lip seal into the speedometer driven gear case using a J 34833 (Figure 17).

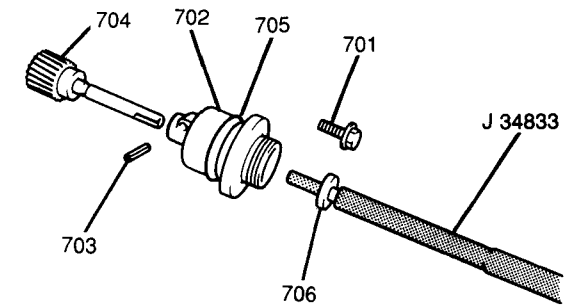

701 SPEEDOMETER DRIVEN GEAR CASE RETAINING BOLT
702 SPEEDOMETER DRIVEN GEAR CASE
703 SPEEDOMETER DRIVEN GEAR CASE ROLL PIN
704 SPEEDOMETER DRIVEN GEAR
705 SPEEDOMETER DRIVEN GEAR CASE O–RING
706 SPEEDOMETER DRIVEN GEAR LIP SEAL
NC7716-7D-JT-RS

Figure 17 Installing Speedometer Driven Gear Lip Seal

2. Speedometer driven gear into the speedometer driven gear case; secure with one roll pin (Figure 17).

- Apply J 36850 to the speedometer driven gear case O-ring (Figure 17).

3. Speedometer driven gear case into transfer case; secure with retaining bolt (Figure 14).

Tighten

- Speedometer driven gear case retaining bolt to 10 N·m (89 lb.in.).

4. Speedometer cable to speedometer driven gear case (Figure 14).

- Lower vehicle.

Speedometer Cable

For speedometer cable service procedures, refer to SECTION 8C.

FRONT OUTPUT SHAFT OIL SEAL

Figures 7, 8, 18 and 19

Remove or Disconnect

Tools Required:
J 26941 Needle Bearing Puller
J 23907 Slide Hammer

- Raise and suitably support vehicle. Refer to SECTION 0A.
- Place a drain pan or suitable container underneath transfer case.

1. Transfer case oil level/filler plug from transfer case (Figure 7).
2. Transfer case drain plug from transfer case and drain transfer case oil (Figure 8).

Important

- An index mark (reference mark) should be placed on the front propeller shaft pinion flange yoke and front differential pinion flange to ensure that the front propeller shaft is installed in the same position from which it was removed. If this precaution is not observed, a driveline imbalance may result causing vibration, premature component wear or other undesirable conditions.

- Place an index mark on the front propeller shaft pinion flange yoke and the front differential pinion flange.

3. Four bolts, four nuts and front propeller shaft from vehicle.
4. Front output shaft oil seal from transfer case using a J 26941 with a J 23907 (Figure 18).

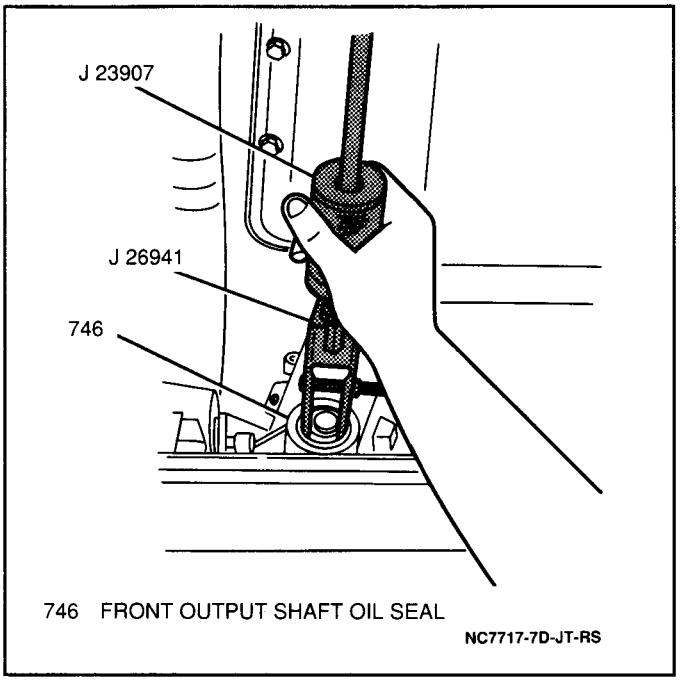

Figure 18 Removing Front Output Shaft Oil Seal

Install or Connect

Tools Required:
J 37751 Oil Seal Installer
J 36850 Transjel® Transmission Assembly Lubricant

1. New front output shaft oil seal into transfer case using a J 37751 (Figure 19).

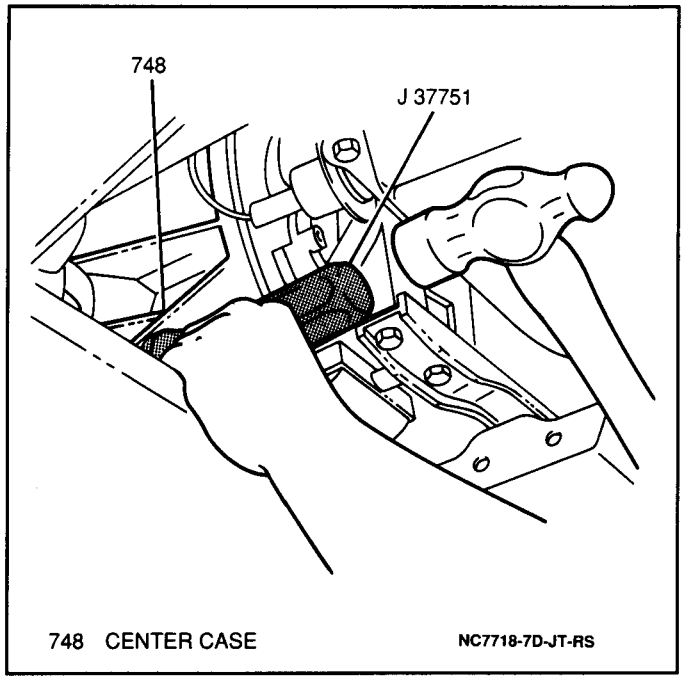

Figure 19 Installing Front Output Shaft Oil Seal

- Apply J 36850 to the new front output shaft oil seal lip.

2. Front propeller shaft into vehicle aligning reference marks made during removal; secure with four bolts and four nuts.

Tighten

- Front propeller shaft bolts and nuts to 50 N·m (37 lb.ft.).

- Apply Loctite® pipe sealant GM P/N 1052080, or equivalent, to the threaded portion of the transfer case drain plug.

3. Transfer case drain plug into transfer case.

Tighten

- Transfer case drain plug to 28 N·m (21 lb.ft.).

- Add approximately 1.7 liters (1.8 qts.) of synthetic 75W-90 GL4 lubricant GM P/N 12345871, or equivalent, into the transfer case oil level/filler plug hole. Oil level should be even with the bottom of the oil level/filler plug hole.
- Apply Loctite® pipe sealant GM P/N 1052080, or equivalent, to the threaded portion of the transfer case oil level/filler plug.

4. Transfer case oil level/filler plug into the transfer case.

Tighten

- Transfer case oil level/filler plug to 28 N·m (21 lb.ft.).

- Lower vehicle.

REAR OUTPUT SHAFT OIL SEAL

Figures 20 and 21

Remove or Disconnect

Tools Required:
J 26941 Needle Bearing Puller
J 23907 Slide Hammer

- Raise and suitably support vehicle. Refer to SECTION 0A.

Important

- An index mark (reference mark) should be made on the rear propeller shaft pinion flange yoke and rear differential pinion flange to ensure that the rear propeller shaft is installed in the same position from which it was removed. If this precaution is not observed, a driveline imbalance may result causing vibration, premature component wear or other undesirable conditions.

- Place an index mark on the rear propeller shaft pinion flange yoke and the rear differential pinion flange.

1. Four bolts, four nuts and rear propeller shaft from vehicle.
2. Rear output shaft oil seal from transfer case using a J 26941 with a J 23907 (Figure 20).

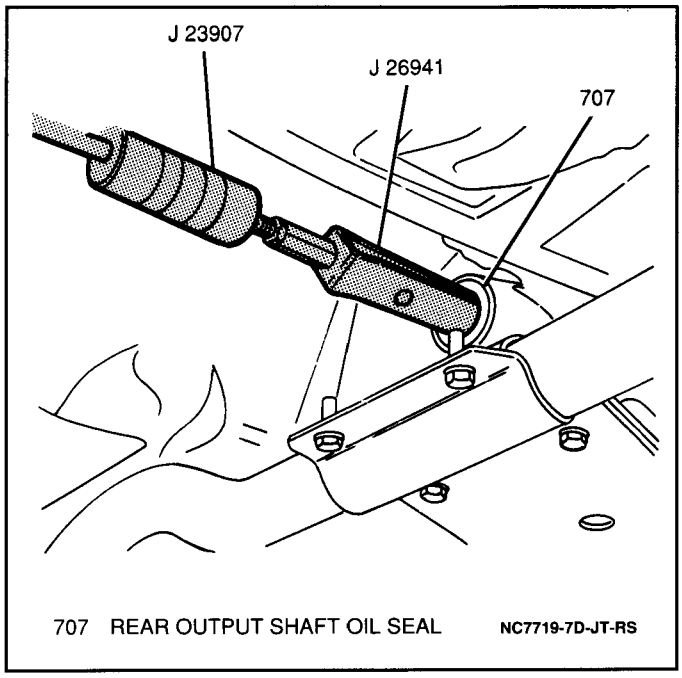

Figure 20 Removing Rear Output Shaft Oil Seal

Install or Connect

Tools Required:
J 37751 Oil Seal Installer
J 36850 Transjel® Transmission Assembly Lubricant

1. New rear output shaft oil seal into transfer case using a J 37751 (Figure 21).

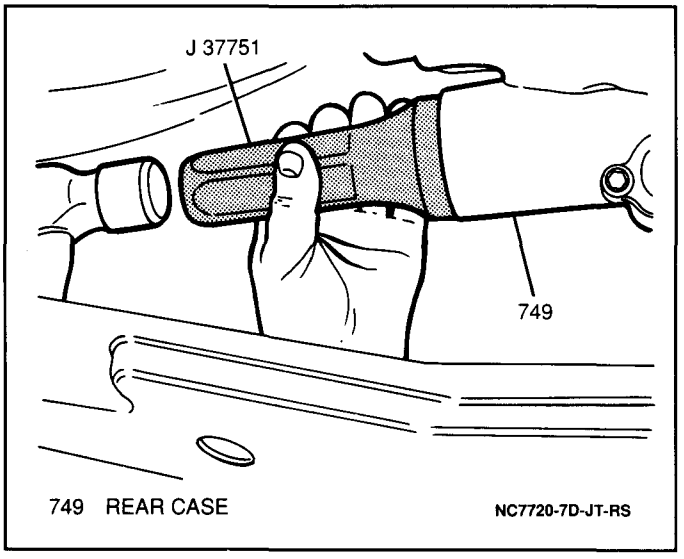

Figure 21 Installing Rear Output Shaft Oil Seal

- Apply J 36850 to the new rear output shaft oil seal lip.

2. Rear propeller shaft into vehicle; secure with four bolts and four nuts.

Tighten

- Rear propeller shaft bolts and nuts to 50 N·m (37 lb.ft.).

Inspect

- Transfer case oil level. Refer to "Checking Transfer Case Oil Level" earlier in this section.

- Apply Loctite® pipe sealant GM P/N 1052080, or equivalent, to the threaded portion of the transfer case oil level/filler plug.

3. Transfer case oil level/filler plug into transfer case.

Tighten

- Transfer case oil level/filler plug to 28 N·m (21 lb.ft.).

- Lower vehicle.

TORQUE STOPPER BUSHING

Figures 22 through 25

Remove or Disconnect

Tool Required:
J 21777-101 Side Bearing Disc

- Raise and suitably support vehicle. Refer to SECTION 0A.

1. One bolt, speedometer cable clip and ground wire from torque stopper housing (Figure 22).
2. One through bolt and nut from torque stopper bushing and torque stopper bracket.

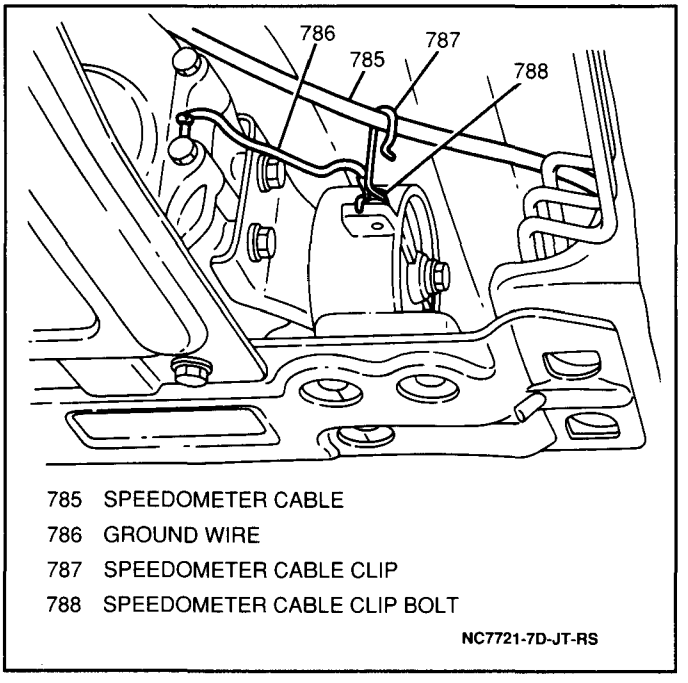

Figure 22 Speedometer Cable Clip at Torque Stopper Housing

3. Three bolts and torque stopper housing from transfer case crossmember.

NOTICE: When pressing the torque stopper bushing in or out of the torque stopper housing, the flush end of the torque stopper housing must be facing downward toward the press support (Figure 23).

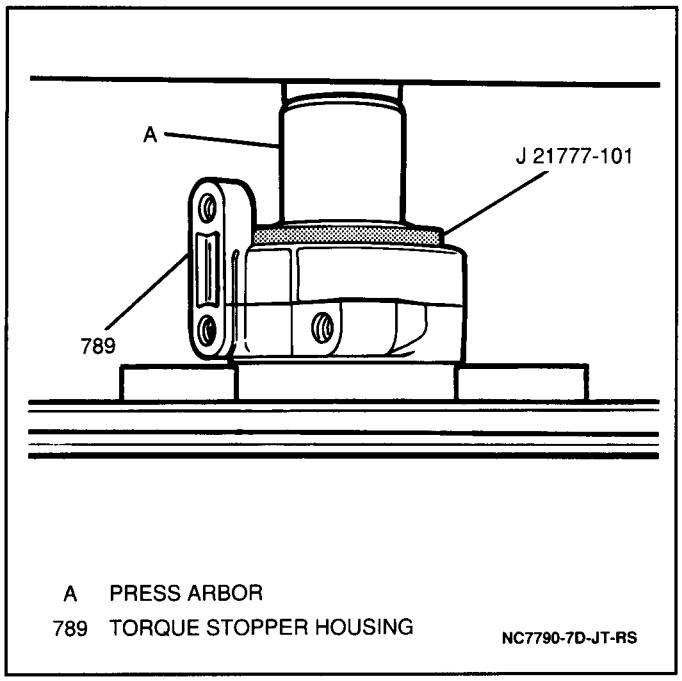

Figure 23 Removing Torque Stopper Bushing

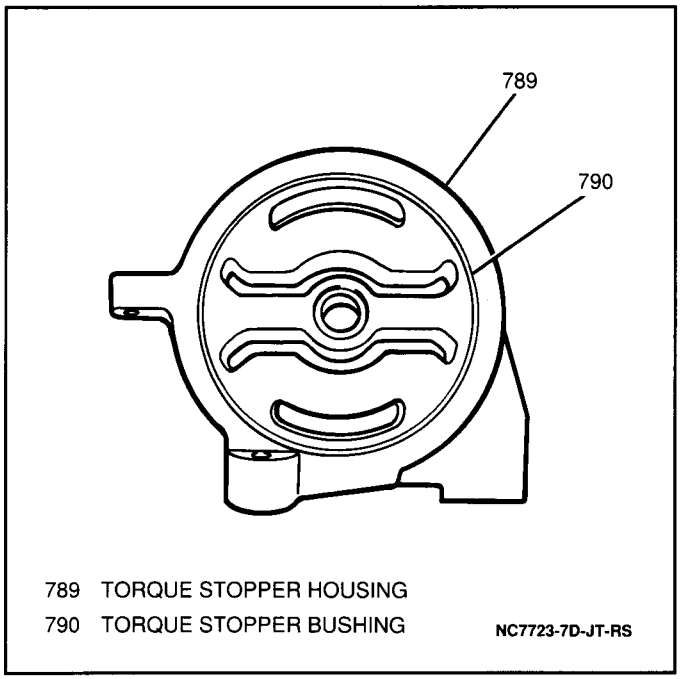

Figure 24 Torque Stopper Bushing and Housing Alignment

4. Torque stopper bushing from torque stopper bushing housing using a J 21777-101 and a press arbor (Figure 23).

Inspect

- Torque stopper bushing for excessive wear or damage. Replace as necessary.

Install or Connect

Tools Required:
J 21777-101 Side Bearing Disc
J 36850 Transjel® Transmission Assembly Lubricant

Important

- When installing the torque stopper bushing, align the gaps in the bushing horizontally in the torque stopper housing (Figure 24). If the torque stopper bushing is not aligned correctly in the torque stopper housing, insufficient torque absorption under high throttle conditions may result.

1. Torque stopper bushing into torque stopper housing using a J 21777-101 and a press arbor (Figure 25).

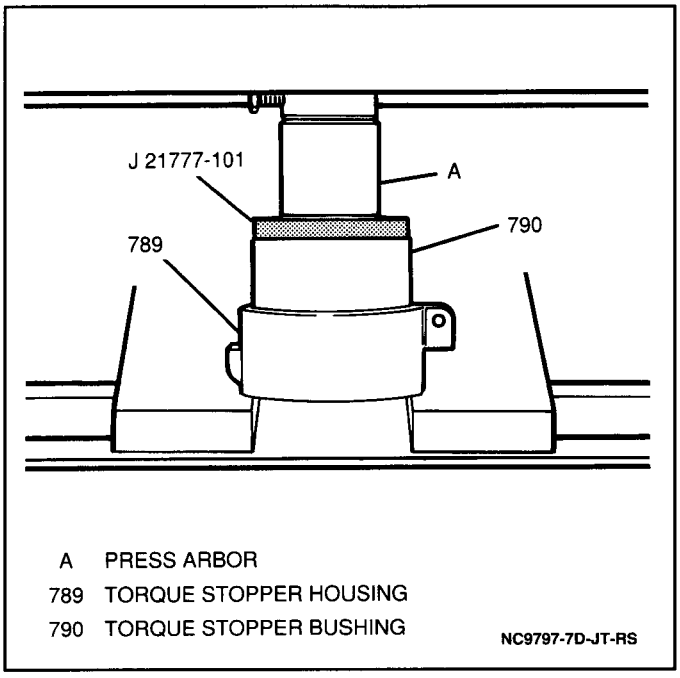

Figure 25 Installing Torque Stopper Bushing

2. Torque stopper housing to transfer case crossmember; secure with three bolts.

Tighten

- Torque stopper mounting bolts to 50 N·m (37 lb.ft.).

3. One through bolt and nut to torque stopper bushing and torque stopper bracket.

Tighten

- Torque stopper bushing through bolt and nut to 50 N·m (37 lb.ft.).

4. Ground wire and speedometer cable clip to torque stopper housing; secure with one bolt (Figure 22).

Tighten

- Speedometer cable clip bolt to 10 N·m (89 lb.in.).

- Lower vehicle.

TRANSFER CASE REAR MOUNT

Figures 26 and 27

Remove or Disconnect

- Raise and suitably support vehicle. Refer to SECTION 0A.
- Support transfer case and transmission assemblies with a suitable hydraulic jack.

1. Two bolts and separate transfer case skid plate from transfer case crossmember (Figure 26).

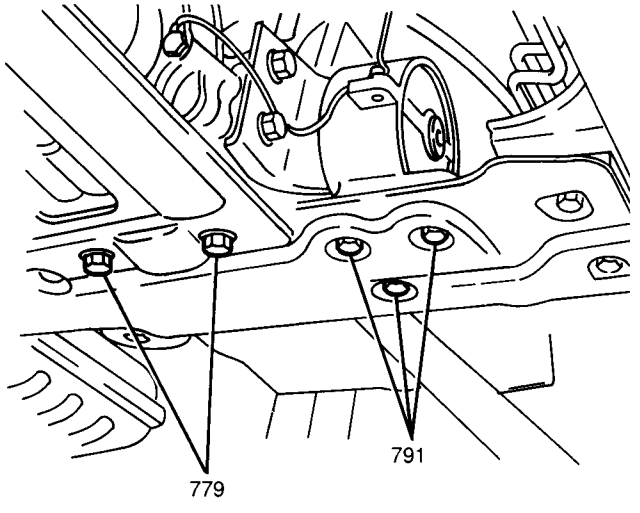

779 TRANSFER CASE SKID PLATE BOLTS
791 TORQUE STOPPER MOUNTING BOLTS
NC7725-7D-JT-RS

Figure 26 Torque Stopper and Transfer Case Skid Plate Bolts

2. Three torque stopper mounting bolts from transfer case crossmember (Figure 26).
3. Six bolts and transfer case crossmember from undercarriage (Figure 27).

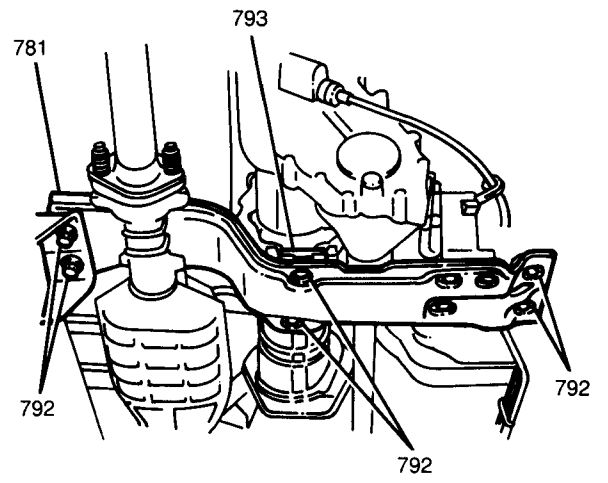

781 TRANSFER CASE CROSSMEMBER
792 TRANSFER CASE CROSSMEMBER BOLTS
793 TRANSFER CASE REAR MOUNT NC7726-7D-JT-RS

Figure 27 Transfer Case Crossmember Bolts

4. One bolt and transfer case rear mount from transfer case.

Inspect

- Transfer case rear mount for excessive wear or damage. Replace as necessary.

Install or Connect

1. Transfer case rear mount to transfer case; secure with one bolt.

Tighten

- Transfer case rear mount bolt to 50 N·m (37 lb.ft.).

2. Transfer case crossmember to undercarriage; secure with six crossmember bolts (Figure 27).

Tighten

- Transfer case crossmember bolts to 50 N·m (37 lb.ft.).

3. Three torque stopper mounting bolts to transfer case crossmember (Figure 26).

Tighten

- Torque stopper mounting bolts to 50 N·m (37 lb.ft.).

4. Transfer case skid plate to transfer case crossmember; secure with two bolts (Figure 26).

Tighten

- Transfer case skid plate bolts to 54 N·m (40 lb.ft.).

- Remove hydraulic transmission jack.
- Lower vehicle.

TRANSFER CASE ASSEMBLY

Figures 7, 10, 11, 12, 13, 22 and 26 through 29

Remove or Disconnect

1. Negative (-) battery cable.
2. Two screws, two plastic retainers and console box from floor.
3. One screw and gearshift control lever knob from gearshift control lever (Figure 10).
4. Six screws, boot cover and gearshift control lever boot from gearshift control lever (Figure 11).
5. One clamp and gearshift lever case boot from gearshift lever case.
6. Gearshift control lever from gearshift lever case by pushing down on the gearshift control lever pivot and turning counterclockwise 90 degrees (1/4 turn) and lifting up (Figure 12).
7. Four-wheel drive switch electrical connector from four wheel drive switch (Figure 13).
8. Four bolts from fan shroud at radiator.

- Raise and suitably support vehicle. Refer to SECTION 0A.

9. Two bolts and separate transfer case skid plate from transfer case crossmember (if equipped) (Figure 26).

- Place a drain pan or suitable container underneath transfer case.

10. Transfer case oil level/filler plug from transfer case (Figure 7).
11. Transfer case drain plug from transfer case and drain transfer case oil (Figure 7).

Important

- An index mark (reference mark) should be made on the front and rear propeller shaft pinion flange yokes and the front and rear differential pinion flanges to ensure that the front and rear propeller shafts are installed in the same positions from which they where removed. If this precaution is not observed, a driveline imbalance may result causing vibration, premature component wear or other undesirable conditions.

- Place an index mark on the front propeller shaft pinion flange yoke and the front differential pinion flange.

12. Four bolts, four nuts and front propeller shaft from vehicle.

- Place an index mark on the rear propeller shaft pinion flange yoke and the differential pinion flange.

13. Four bolts, four nuts and rear propeller shaft from vehicle.
14. Speedometer cable from speedometer driven gear case (Figure 14).
15. One bolt, speedometer cable clip and ground wire from torque stopper housing (Figure 22).
16. Two bolts, two nuts and exhaust pipe bracket from rear case (manual transmission) or transfer adapter case (automatic transmission) and three way catalytic converter (TWC).
17. Two bolts and separate forward pipe/TWC assembly from intermediate pipe/muffler.
18. Three nuts from exhaust manifold and forward pipe/TWC assembly from vehicle.

- Support transfer case with a suitable hydraulic jack.

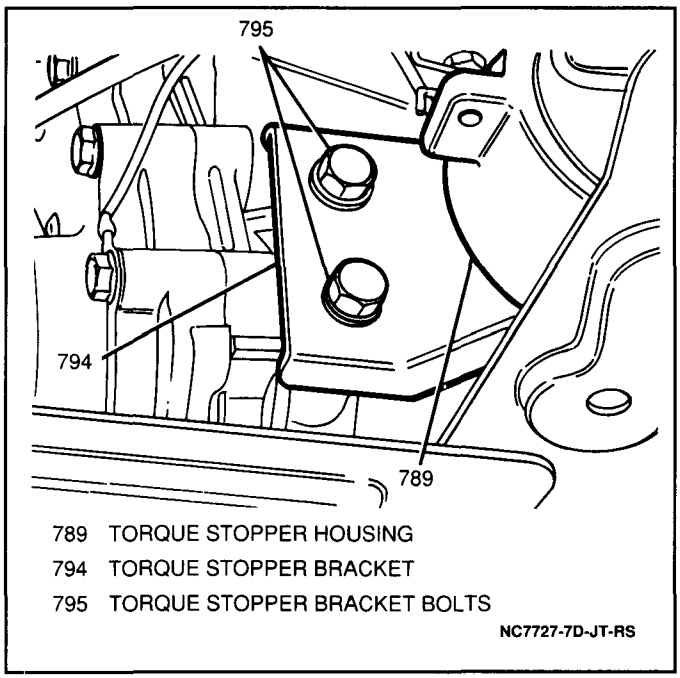

Figure 28 Torque Stopper Bracket

19. Two bolts from torque stopper bracket (Figure 28).
20. Six bolts and transfer case crossmember from undercarriage (Figure 27).

- Place a wood block with the dimensions shown in Figure 29 between the distributor gear housing and the bulkhead to prevent the distributor and other components from being damaged when the transfer case is lowered.

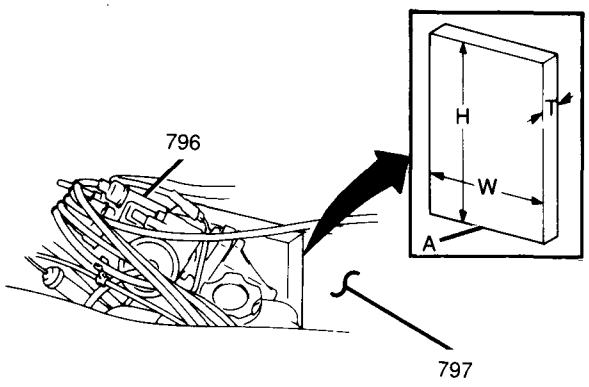

A WOOD BLOCK
H 200 mm (8.0")
T 45 mm (1.8")
W 100-150 mm (4.0-6.0")
796 DISTRIBUTOR CAP
797 BULKHEAD
NC7728-7D-JT-RS

Figure 29 Wood Block Support

- Lower transfer case slowly until engine contacts its support point on the wood block.

21. One clamp and breather hose from gearshift lever case.
22. Eleven transfer case-to-transmission bolts.

- Slide transfer case off transmission output shaft and slowly lower transfer case making sure there are no obstructions.

Inspect

- For disassembly and inspection procedures, refer to "Unit Repair" later in this section.

Install or Connect

- Raise transfer case into position and slide onto transmission output shaft.

1. Eleven transfer case-to-transmission bolts.

Tighten

- Transfer case-to-transmission bolts to 28 N·m (21 lb.ft.).

2. Breather hose to gearshift lever case; secure with one clamp.

- Raise transfer case slowly until engine is no longer in contact with the wood block between the bulkhead and the distributor gear housing (Figure 29).
- Remove wood block.

3. Transfer case crossmember to undercarriage; secure with six bolts (Figure 27).

Tighten

- Transfer case crossmember bolts to 50 N·m (37 lb.ft.).

4. Two bolts to torque stopper bracket (Figure 28).

Tighten

- Torque mount bracket bolts to 50 N·m (37 lb.ft.).

- Remove hydraulic jack from underneath transfer case.

5. Forward pipe/TWC assembly to vehicle; secure with three nuts at exhaust manifold.

Tighten

- Forward pipe/TWC assembly nuts to 50 N·m (37 lb.ft.).

6. Forward pipe/TWC assembly to intermediate pipe/muffler; secure with two bolts.

Tighten

- Muffler pipe-to-TWC bolts to 50 N·m (37 lb.ft.).

7. Exhaust pipe bracket to rear case (manual transmission) or transfer adapter case (automatic transmission), and TWC; secure with two bolts and two nuts.

Tighten

- Exhaust pipe bracket bolts and nuts to 60 N·m (44 lb.ft.).

8. Speedometer cable clip and ground wire to torque stopper housing; secure with one bolt (Figure 22).

Tighten

- Speedometer cable clip bolt to 10 N·m (89 lb.in.).

9. Speedometer cable to speedometer driven gear case (Figure 14).
10. Rear propeller shaft into vehicle aligning reference marks made during removal; secure with four bolts and four nuts.

Tighten

- Rear propeller shaft bolts and nuts to 50 N·m (37 lb.ft.).

11. Front propeller shaft into vehicle aligning reference marks made during removal; secure with four bolts and four nuts.

Tighten

- Front propeller shaft bolts and nuts to 50 N·m (37 lb.ft.).

- Apply Loctite® pipe sealant GM P/N 1052080, or equivalent, to the threaded portion of the transfer case drain plug.

12. Transfer case drain plug into transfer case (Figure 7).

Tighten

- Transfer case drain plug to 28 N·m (21 lb.ft.).

- Add approximately 1.7 liters (1.8 qts.) of synthetic 75W-90 GL4 lubricant GM P/N 12345871, or equivalent, into the transfer case oil level/filler plug hole. Oil level should be even with the bottom of the oil level/filler plug.
- Apply Loctite® pipe sealant GM P/N 1052080, or equivalent, to the threaded portion of the transfer case oil level/filler plug.

13. Transfer case oil level/filler plug into transfer case (Figure 7).

Tighten

- Transfer case oil level/filler plug to 28 N·m (21 lb.ft.).

14. Transfer case skid plate to transfer case crossmember; secure with two bolts (if equipped) (Figure 26).

Tighten

- Transfer case skid plate bolts to 54 N·m (40 lb.ft.).

- Lower vehicle.

15. Four bolts to fan shroud at radiator.

Tighten

- Fan shroud bolts to 10 N·m (89 lb.in.).

16. Four-wheel drive switch electrical connector to four-wheel drive switch (Figure 13).
17. Gearshift control lever into gearshift lever case and pushing down on the shift control lever pivot and turning clockwise 90 degrees (1/4 turn) and releasing.
18. Gearshift lever case boot to gearshift lever case; secure with one clamp.
19. Gearshift control lever boot and boot cover onto gearshift control lever; secure with six screws (Figure 11).
20. Gearshift control lever knob onto gearshift control lever; secure with one screw (Figure 10).
21. Console box to floor; secure with two plastic retainers and two screws.
22. Negative (-) battery cable.

Tighten

- Negative (-) battery cable-to-negative (-) battery terminal retainer to 15 N·m (11 lb.ft.).

UNIT REPAIR

TRANSFER CASE DISASSEMBLY

Figures 30 through 65

Remove or Disconnect

Tools Required:
- J 37637 Case Separator
- J 8433 Bearing Puller
- J 37756 Output Shaft Bearing Puller Adapter
- J 26941 Needle Bearing Puller
- J 23907 Slide Hammer
- J 34757 Output Shaft Ring Remover
- J 39497 Friction Ring Remover and Installer
- J 22912-01 Split Plate
- J 34844 Front Shaft Bearing Remover
- J 28406 Input Gear Bearing Remover

1. Four-wheel drive switch and steel ball from rear case (Figure 30).

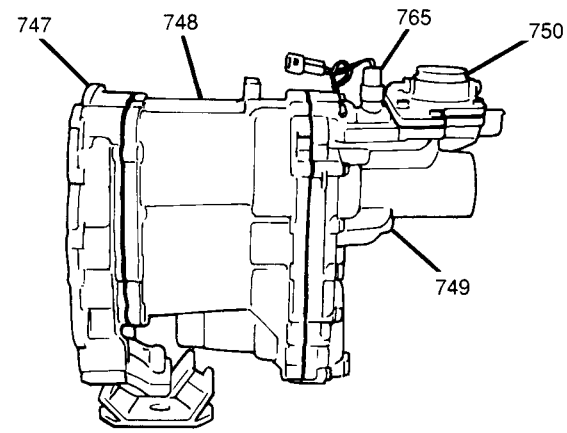

747 FRONT CASE
748 CENTER CASE
749 REAR CASE
750 GEARSHIFT LEVER CASE
765 FOUR-WHEEL DRIVE SWITCH

NC0703-7D-JT-RS

Figure 30 Transfer Case Components

- Use of a magnet will aid in the removal of steel ball from the rear case.

2. One bolt and speedometer driven gear case from rear case.
3. Five bolts and gearshift lever case from rear case (Figure 31).

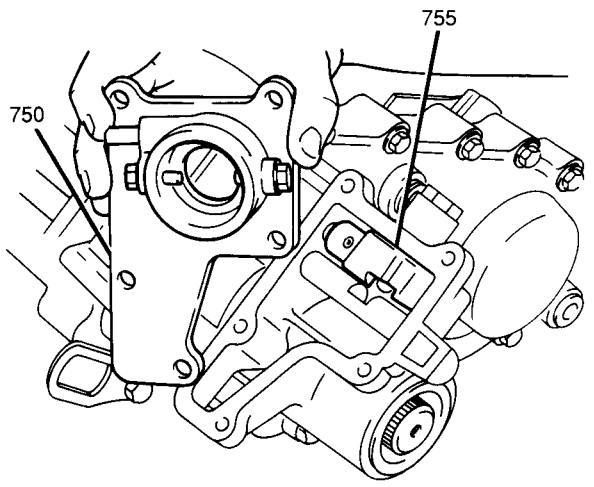

750 GEARSHIFT LEVER CASE
755 REDUCTION SHIFT YOKE
NC0704-7D-JT-RS

Figure 31 Removing Gearshift Lever Case

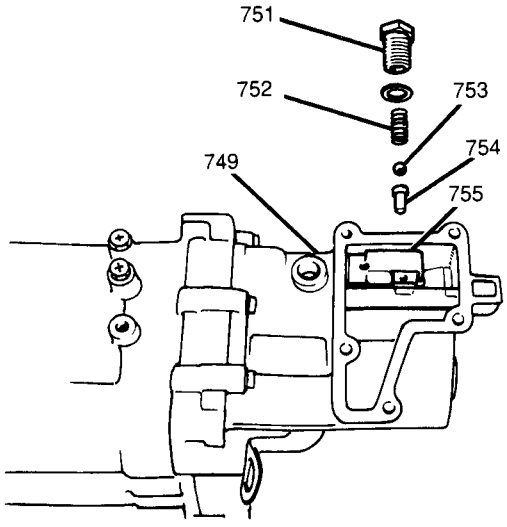

749 REAR CASE
751 SELECT RETURN SPRING BOLT
752 SELECT RETURN SPRING
753 SELECT RETURN BALL
754 SELECT RETURN PIN
755 REDUCTION SHIFT YOKE
NC7731-7D-JT-RS

Figure 32 Select Return System

4. Select return spring bolt, washer, select return spring, select return ball and select return pin from the rear case (Figure 32).

Important

- Driving the reduction shift yoke roll pin down will cause the pin to fall down into the transfer case assembly. Use a magnet during removal or remove the reduction shift yoke roll pin after removing the rear case.

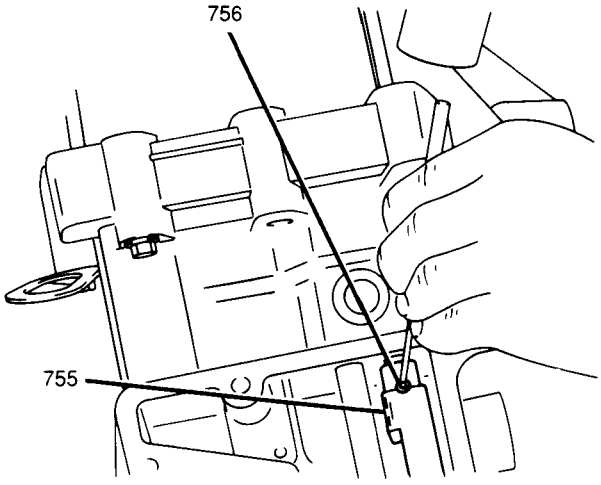

755 REDUCTION SHIFT YOKE
756 REDUCTION SHIFT YOKE ROLL PIN
NC7732-7D-JT-RS

Figure 33 Removing Reduction Shift Yoke Roll Pin

5. Reduction shift yoke roll pin from the reduction shift yoke using a standard drift punch and a hammer (Figure 33).

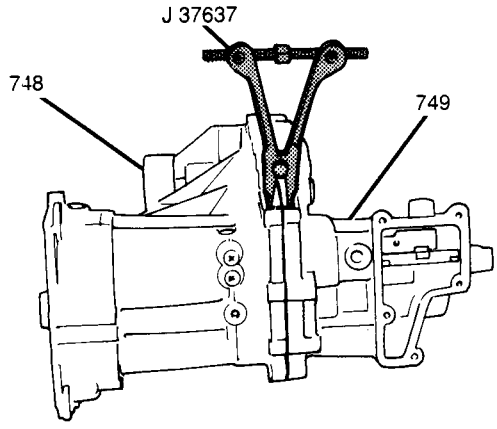

748 CENTER CASE
749 REAR CASE
NC7733-7D-JT-RS

Figure 34 Separating Center and Rear Cases

- Slide the reduction shift yoke rearward and pull the reduction shift yoke off of reduction shift shaft and out of rear case.

6. Fifteen rear case bolts and separate the rear case from the center case using a J 37637 (Figures 34 and 35).

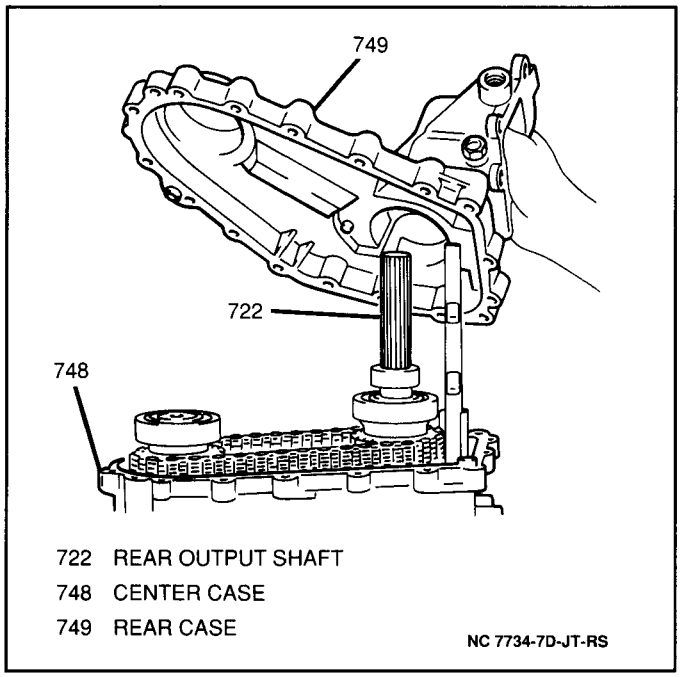

Figure 35 Removing Rear Case

7. Selective shim from top of rear output shaft rear bearing.

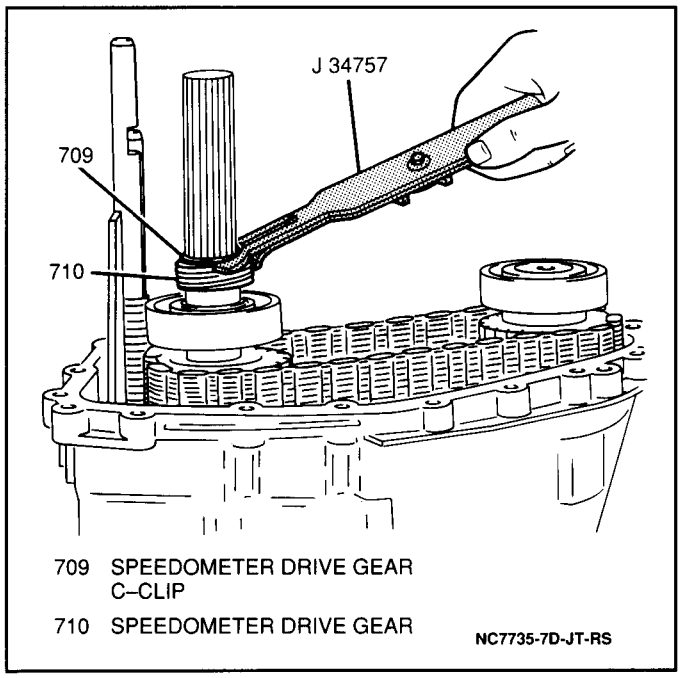

Figure 36 Removing Speedometer Drive Gear

8. Speedometer drive gear C-clip and speedometer drive gear from the rear output shaft using a J 34757 (Figure 36).
9. Rear output shaft rear bearing C-clip from the rear output shaft using the J 34757 (Figure 37).

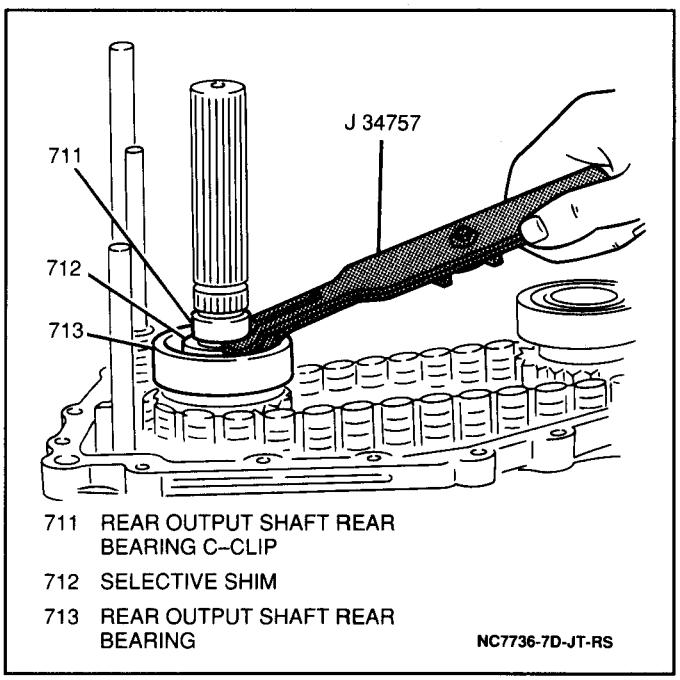

Figure 37 Removing Rear Output Shaft Rear Bearing C-Clip

10. Rear output shaft rear bearing from the rear output shaft using a J 8433 with a J 37756 (Figure 38).

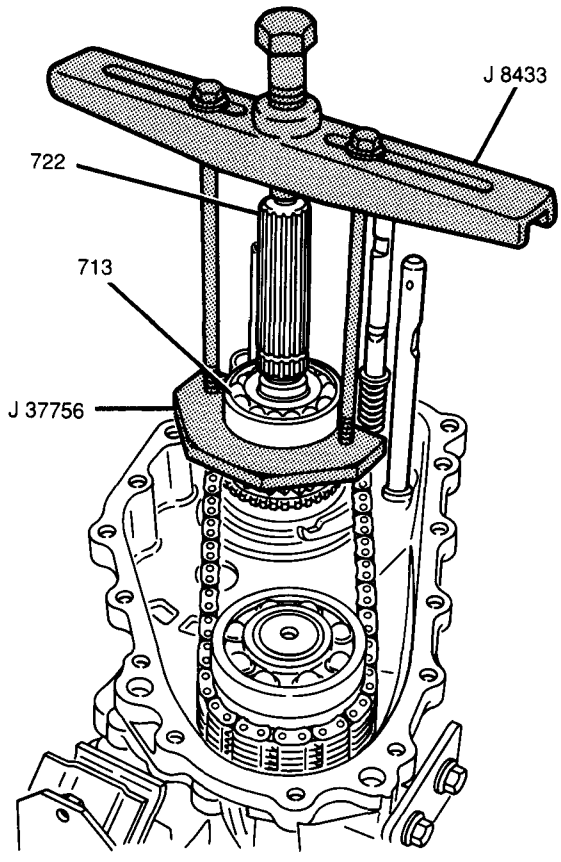

713 REAR OUTPUT SHAFT REAR BEARING
722 REAR OUTPUT SHAFT
NC7737-7D-JT-RS

Figure 38 Removing Rear Output Shaft Rear Bearing

Important

- Use caution not to lose the rear output shaft washer ball underneath the drive sprocket bushing during drive sprocket bushing removal.

11. Drive sprocket bushing and drive sprocket needle bearing from the rear output shaft (Figure 39).

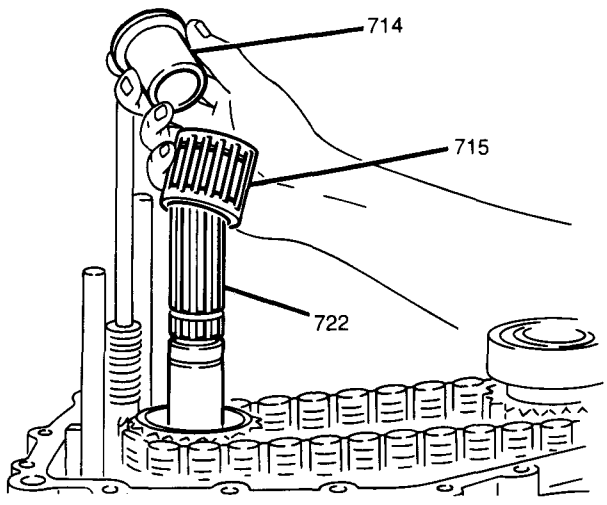

714 DRIVE SPROCKET BUSHING
715 DRIVE SPROCKET NEEDLE BEARING
722 REAR OUTPUT SHAFT
NC7738-7D-JT-RS

Figure 39 Removing Drive Sprocket Needle Bearing and Drive Sprocket Bushing

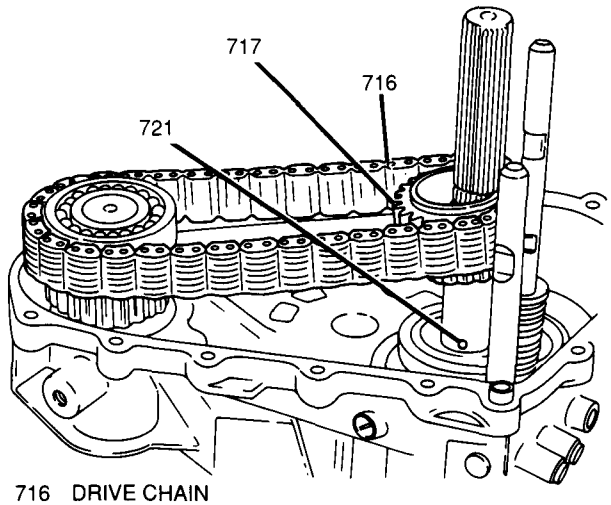

716 DRIVE CHAIN
717 DRIVE SPROCKET
721 REAR OUTPUT SHAFT WASHER BALL
NC7739-7D-JT-RS

Figure 40 Removing Drive Sprocket and Drive Chain

12. Drive sprocket, drive chain and rear output shaft washer ball from the rear output shaft and front output shaft (Figure 40).
13. Rear output shaft oil seal from the rear case using a J 26941 with a J 23907 (Figure 41).
14. Rear output shaft needle bearing from the rear case using the J 26941 with the J 23907 (Figure 42).
15. One bolt and countershaft case plate from front case (Figure 43).

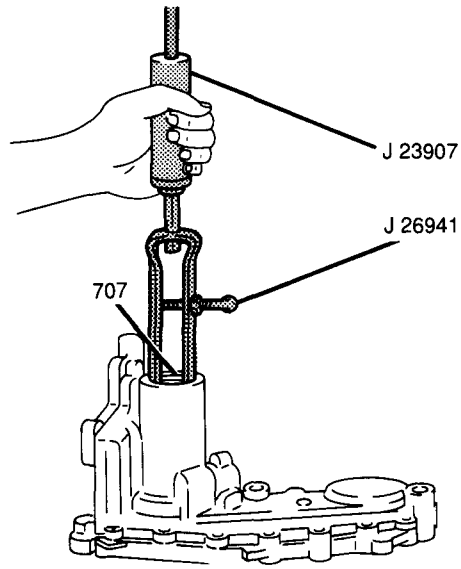

707 REAR OUTPUT SHAFT OIL SEAL

NC7740-7D-JT-RS

Figure 41 Removing Rear Output Shaft Oil Seal

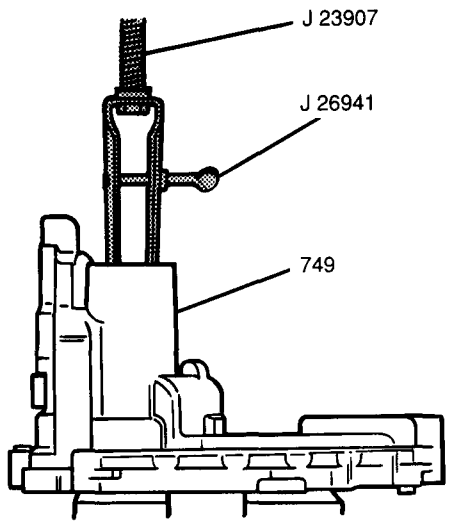

749 REAR CASE

NC7741-7D-JT-RS

Figure 42 Removing Rear Output Shaft Needle Bearing

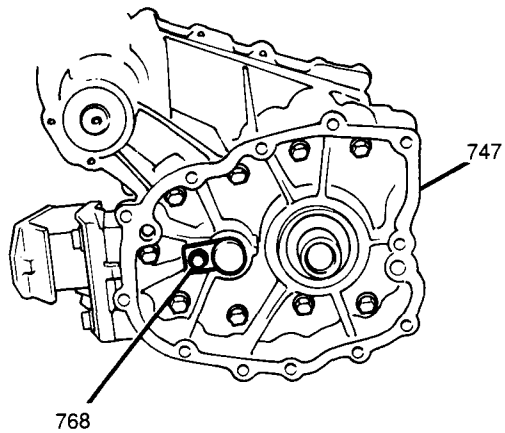

747 FRONT CASE

768 COUNTERSHAFT CASE PLATE BOLT

NC7742-7D-JT-RS

Figure 43 Countershaft Case Plate Bolt

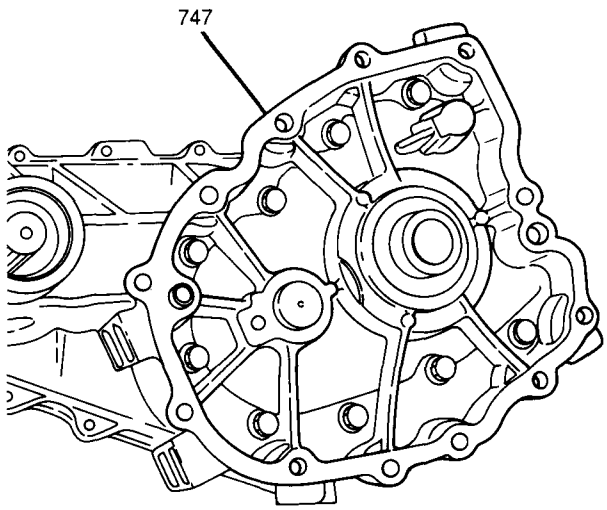

747 FRONT CASE

NC0716-7D-JT-RS

Figure 44 Removing Front Case Bolts

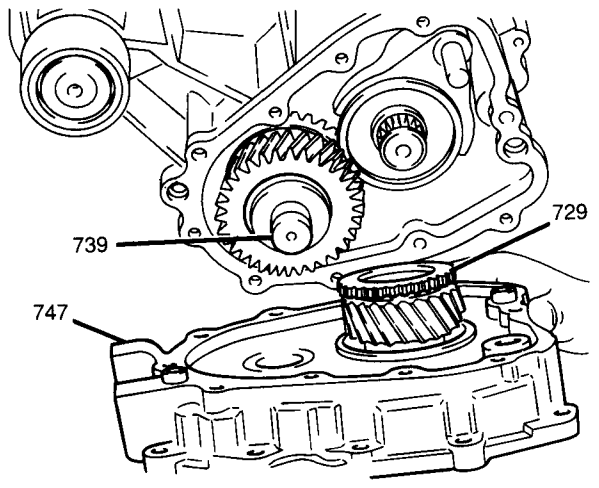

729 INPUT GEAR
739 COUNTERSHAFT
747 FRONT CASE

NC7744-7D-JT-RS

Figure 45 Removing Front Case

16. Nine front case bolts and separate front case from center case (Figures 44 and 45).
17. Countershaft assembly from center case.

Important

- Use caution not to lose the countershaft washer balls which come out from between the countershaft and countershaft washers (front and rear).

18. Countershaft washers and washer balls from countershaft (Figure 46).
19. Counter gear, countershaft needle bearings and countershaft spacer from countershaft (Figure 46).

Important

- Neither the countershaft friction ring or O-ring should be removed unless absolutely necessary. If either is removed they must be replaced with new components.

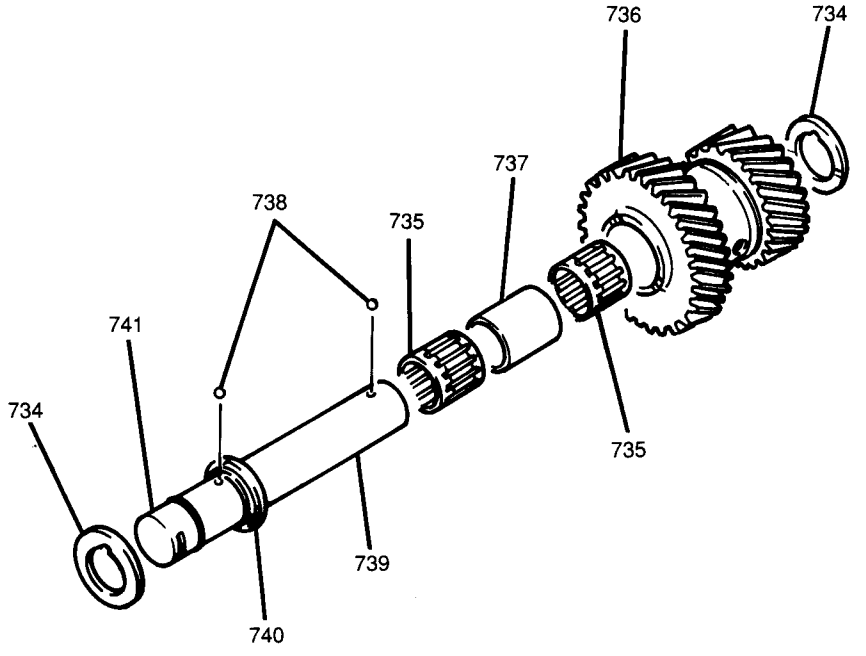

734 SHAFT WASHER
735 SHAFT NEEDLE BEARING
736 COUNTER GEAR
737 SHAFT SPACER
738 SHAFT WASHER BALL
739 COUNTERSHAFT
740 FRICTION RING
741 SHAFT O-RING

NC0718-7D-JT-RS

Figure 46 Countershaft Assembly

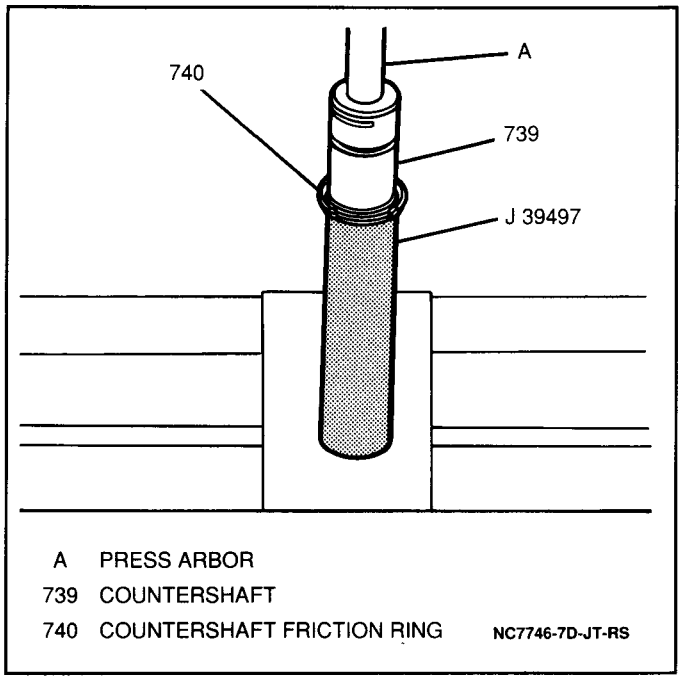

Figure 47 Removing Countershaft Friction Ring

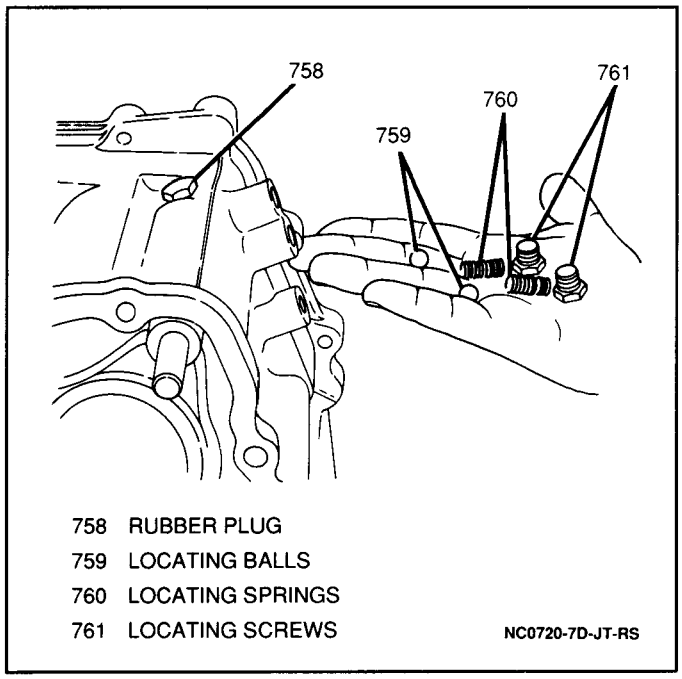

Figure 48 Removing Locating Balls

Inspect

1. Countershaft friction ring for excessive wear or damage. Replace as necessary.
2. Countershaft O-ring for cuts or other damage. Replace as necessary.

20. Countershaft O-ring from countershaft.
21. Countershaft friction ring from countershaft using J 39497 and a press arbor (Figure 47).
22. Two rubber plugs, two locating screws, two washers, two locating springs and two locating balls from center case (Figure 48).

Important

- Make note of the alignment marks on the reduction clutch sleeve and hub and the front drive clutch sleeve and hub in order to ensure correct alignment during assembly. If no alignment marks exist, scribe new marks in both the reduction clutch sleeve and hub and the front drive clutch sleeve and hub.

23. Reduction shift shaft, reduction shift fork and reduction clutch sleeve from rear output shaft in front of center case (Figure 49).

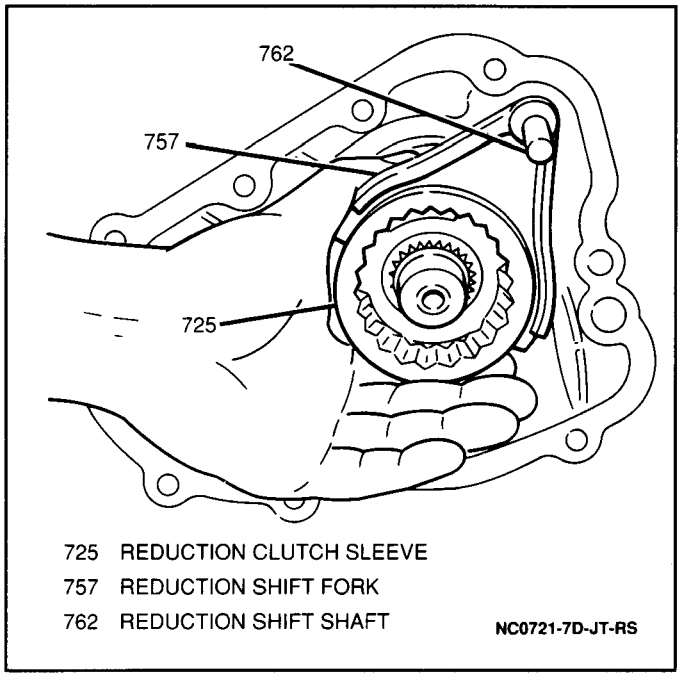

Figure 49 Removing Reduction Clutch Sleeve and Reduction Shift Shaft

24. Front drive shift shaft, front drive shift fork, front drive clutch sleeve and front drive clutch hub from rear output shaft in rear of the center case.
25. Interlock ball from center case passage.
26. Reduction hub C-clip from rear output shaft using the J 34757.
27. Reduction clutch hub, low output gear and low output gear needle bearing from rear output shaft (Figure 50).

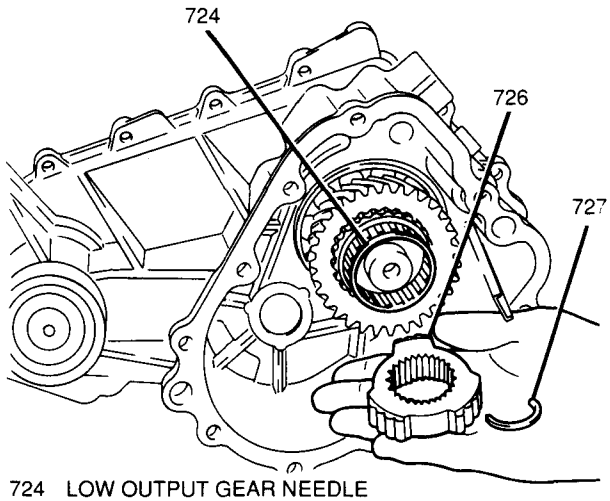

724 LOW OUTPUT GEAR NEEDLE BEARING
726 REDUCTION CLUTCH HUB
727 REDUCTION CLUTCH HUB C–CLIP
NC7749-7D-JT-RS

Figure 50 Removing Reduction Clutch Hub

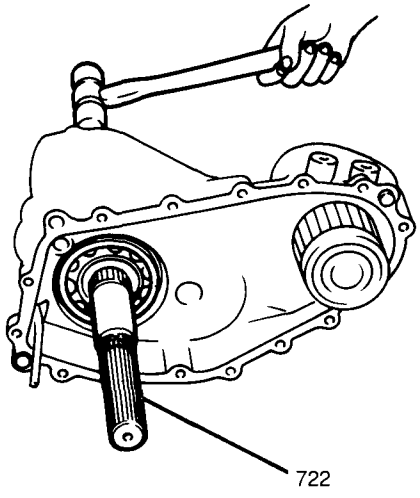

722 REAR OUTPUT SHAFT
NC7750-7D-JT-RS

Figure 51 Removing Rear Output Shaft

28. Rear output shaft from center case using a plastic mallet (Figure 52).

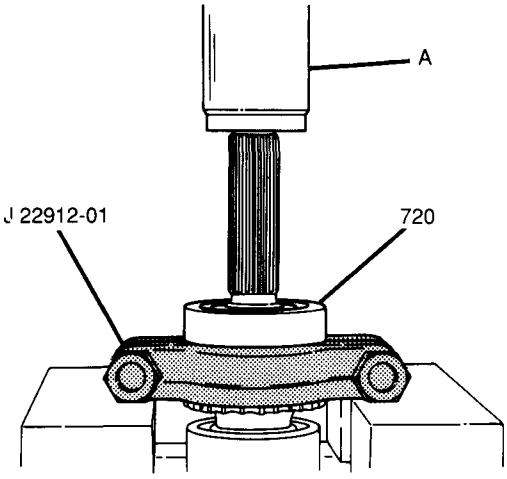

A PRESS ARBOR
720 REAR OUTPUT SHAFT FRONT BEARING
NC7751-7D-JT-RS

Figure 52 Removing Rear Output Shaft Front Bearing

29. Rear output shaft front bearing from rear output shaft using a J 22912-01 and a press arbor (Figure 52).

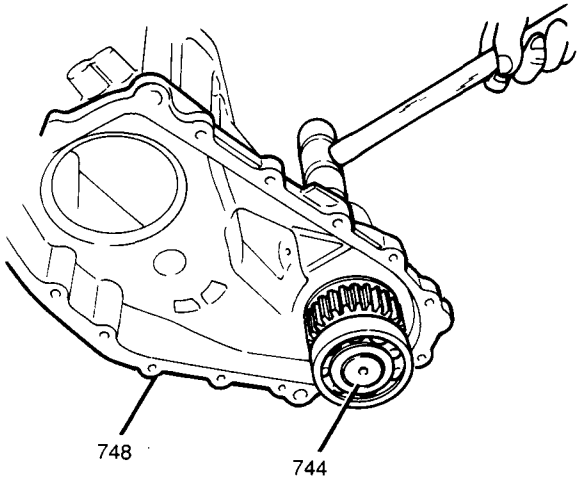

744 OUTPUT FRONT SHAFT
748 CENTER CASE
NC7752-7D-JT-RS

Figure 53 Front Output Shaft

30. Front output shaft and bearings from center case using a plastic mallet (Figure 53).

31. One bolt and case gutter from the center case (Figure 54).
32. Front output shaft oil seal from center case using the J 26941 with the J 23907 (Figure 55).
33. Front output shaft needle bearing from center case using the J 26941 with the J 23907 (Figure 56).

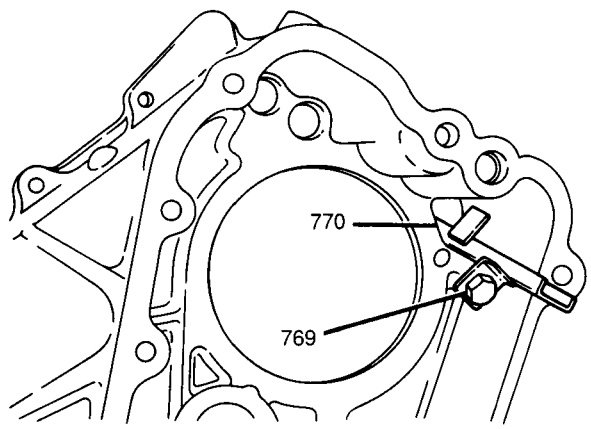

769 CASE GUTTER BOLT
770 CASE GUTTER
NC0726-7D-JT-RS

Figure 54 Removing Case Gutter

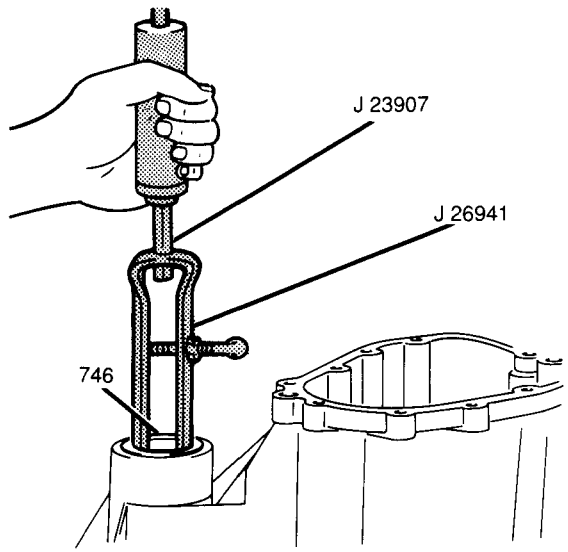

746 FRONT OUTPUT SHAFT OIL SEAL
NC7754-7D-JT-RS

Figure 55 Removing Front Output Shaft Oil Seal

34. Front output shaft bearings from front output shaft using a J 22912-01 with a J 34844 and a press arbor (Figure 57).

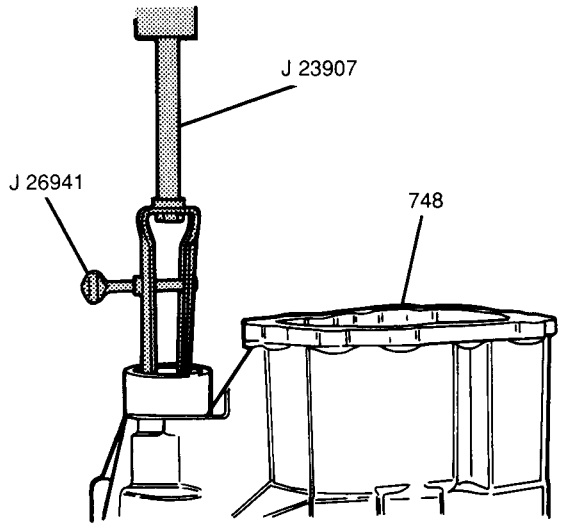

748 CENTER CASE
NC 7755-7D-JT-RS

Figure 56 Removing Front Output Shaft Needle Bearing

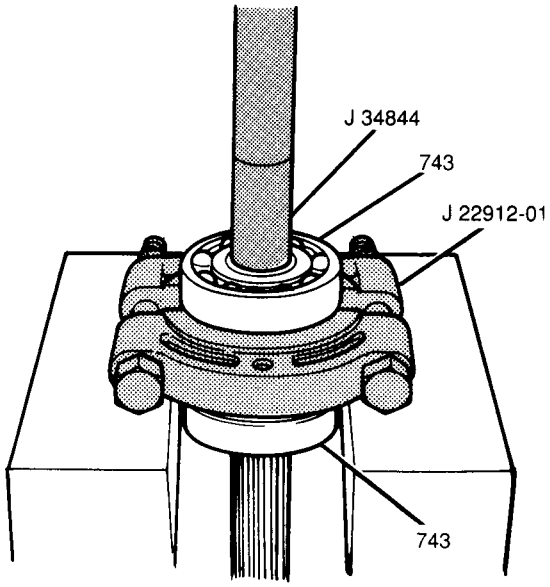

743 FRONT OUTPUT SHAFT BEARING
NC7756-7D-JT-RS

Figure 57 Removing Front Output Shaft Bearings

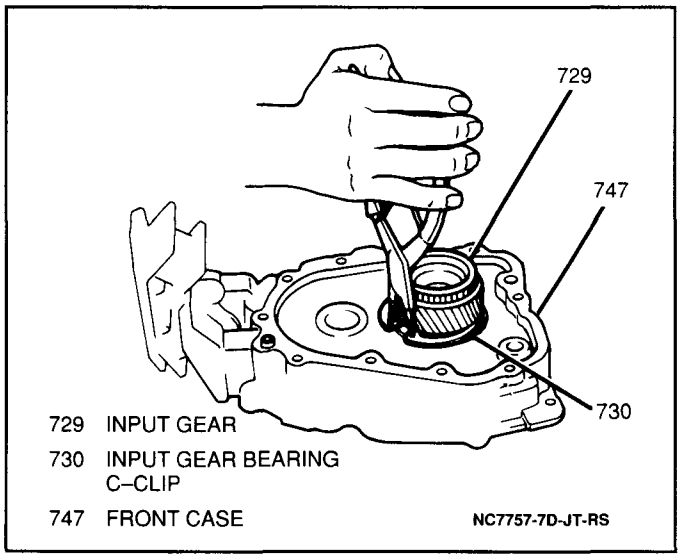

Figure 58 Removing Input Gear Bearing C-Clip

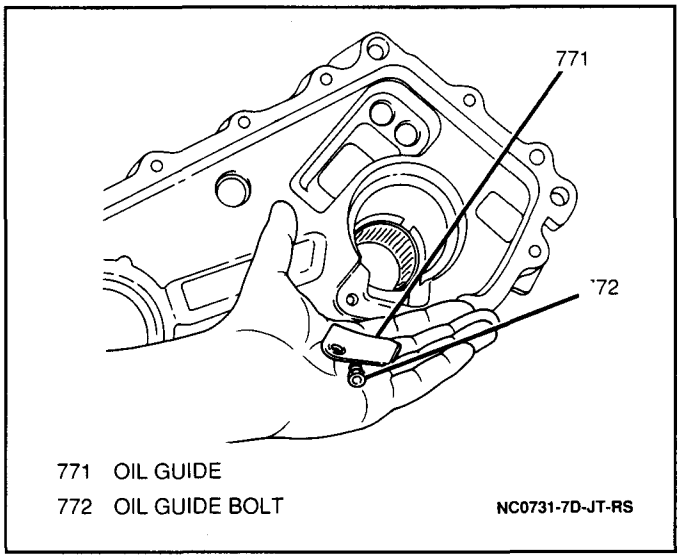

Figure 60 Removing Oil Guide

35. Input gear bearing C-clip from input gear (Figure 58).
36. Input gear from front case using a plastic mallet (Figure 59).

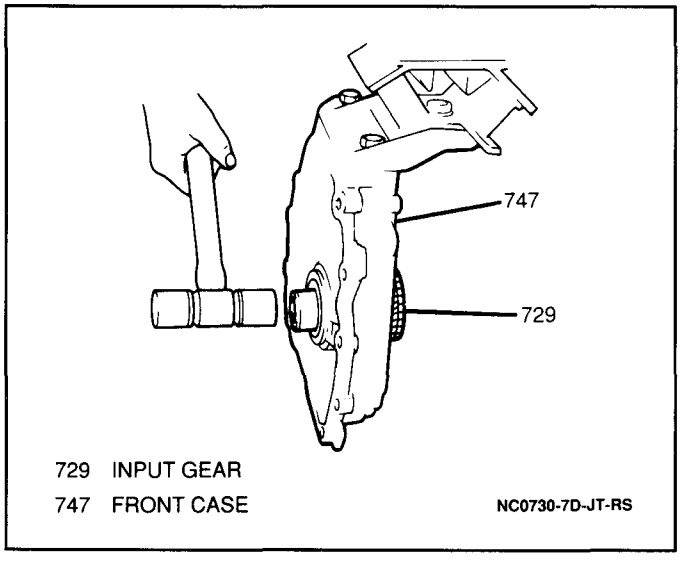

Figure 59 Removing Input Gear From Front Case

37. One bolt and oil guide from rear case (Figure 60).
38. Input gear oil seal from front case using the J 26941 with the J 23907 (Figure 61).

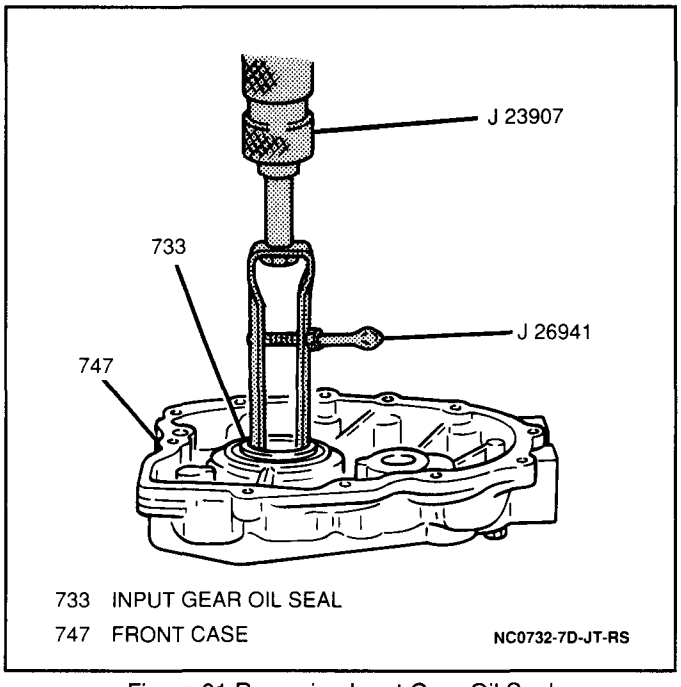

Figure 61 Removing Input Gear Oil Seal

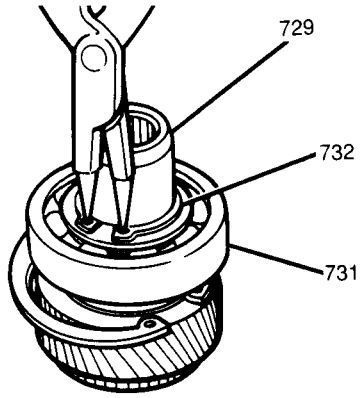

729 INPUT GEAR
731 INPUT GEAR BEARING
732 INPUT GEAR C-CLIP NC0733-7D-JT-RS

Figure 62 Removing Input Gear C-Clip

39. Input gear C-clip from input gear (Figure 62).
40. Input gear bearing from input gear using the J 22912-01 with a J 28406 and a press arbor (Figure 63).

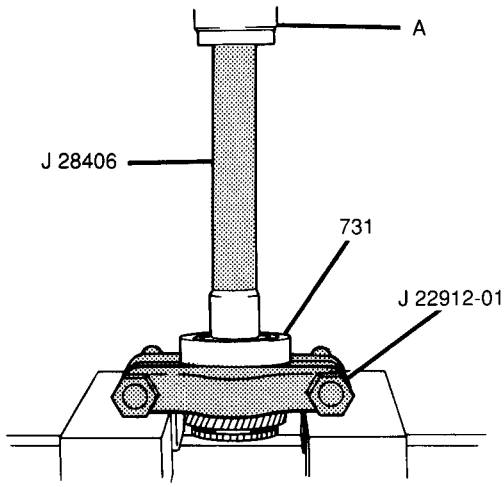

A PRESS ARBOR
731 INPUT GEAR BEARING NC0734-7D-JT-RS

Figure 63 Removing Input Gear Bearing

41. One roll pin from reduction shift fork and reduction shift fork from reduction shift shaft.
42. Two C-clips, shaft stop washer, front drive shift fork and front drive fork spring from front drive shift shaft.

Clean

1. Front case, rear case and center case with clean solvent and dry thoroughly. Pay particular attention to all case component mating surfaces to ensure proper case sealing.
2. All internal components with solvent and dry thoroughly.

Inspect

1. Front case, rear case, center case and gearshift lever case for cracks or porosity. Replace as necessary.
2. Drive teeth and clutching teeth of all gears and sprockets for broken or chipped teeth and gear clash damage.
3. Shift shafts and forks for excessive wear or distortion. Replace as necessary.
4. Clutch hubs and sleeves for poor fit and cracked or broken teeth. Replace as necessary.
5. Locating springs for weakness or distortion. Replace as necessary.

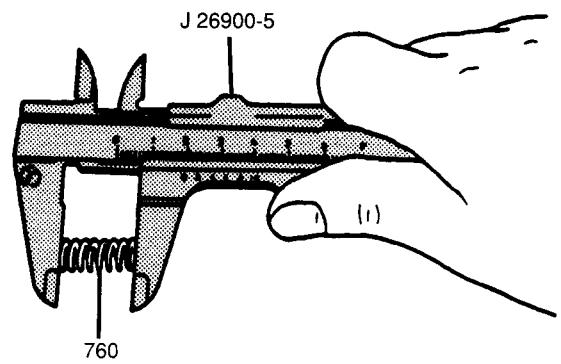

760 LOCATING SPRING NC0735-7D-JT-RS

Figure 64 Measuring Locating Springs

Measure

Tool Required:
J 26900-5 Vernier Caliper

1. Each locating spring using a J 26900-5 (Figure 64). Standard spring length should be 19.5 mm (0.768-inch). If spring length measures below 18.0 mm (0.709-inch), replace the springs as necessary.

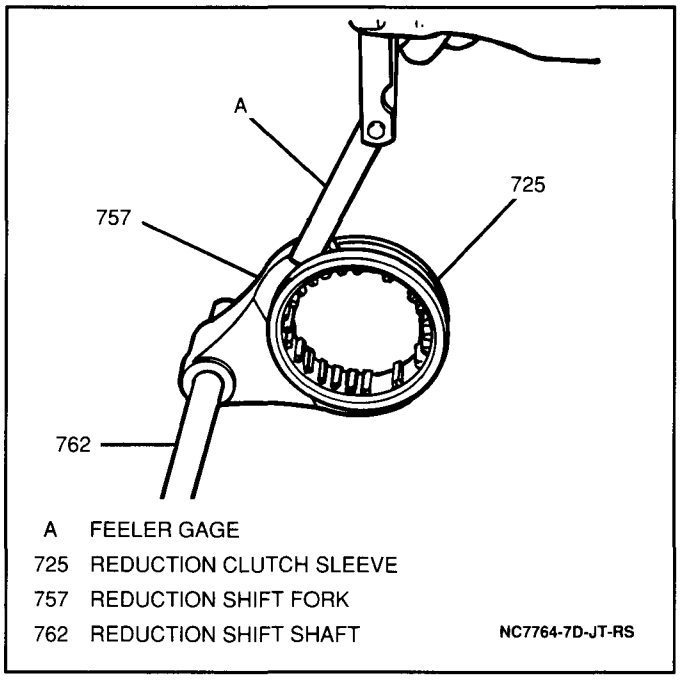

Figure 65 Measuring Shift Fork-to-Clutch Sleeve Clearance

2. Shift fork-to-clutch sleeve clearance using a feeler gage. Maximum shift fork-to-clutch sleeve clearance is 1.0 mm (0.039-inch). If clearance exceeds specification, replace the shift fork and clutch sleeve as necessary (Figure 65).

TRANSFER CASE ASSEMBLY

Figures 66 through 86

Install or Connect

Tools Required:
- J 6133-01 Input Gear Bearing Installer
- J 37752 Oil Seal Installer
- J 35871 Input Gear Installer
- J 35664 Press Tube/Bearing Installer
- J 22912-01 Split Plate
- J 37757 Needle Bearing Installer
- J 37753 Bearing Installer
- J 36183 Output Rear Shaft Installer
- J 39497 Friction Ring Remover and Installer
- J 37751 Oil Seal Installer
- J 36850 Transjel® Transmission Assembly Lubricant

1. Front drive shift shaft C-clip, shaft stop washer, front drive shift fork spring, front drive shift fork and shaft stop washer onto front drive shift shaft; secure with front drive shift shaft C-clip (Figure 66).

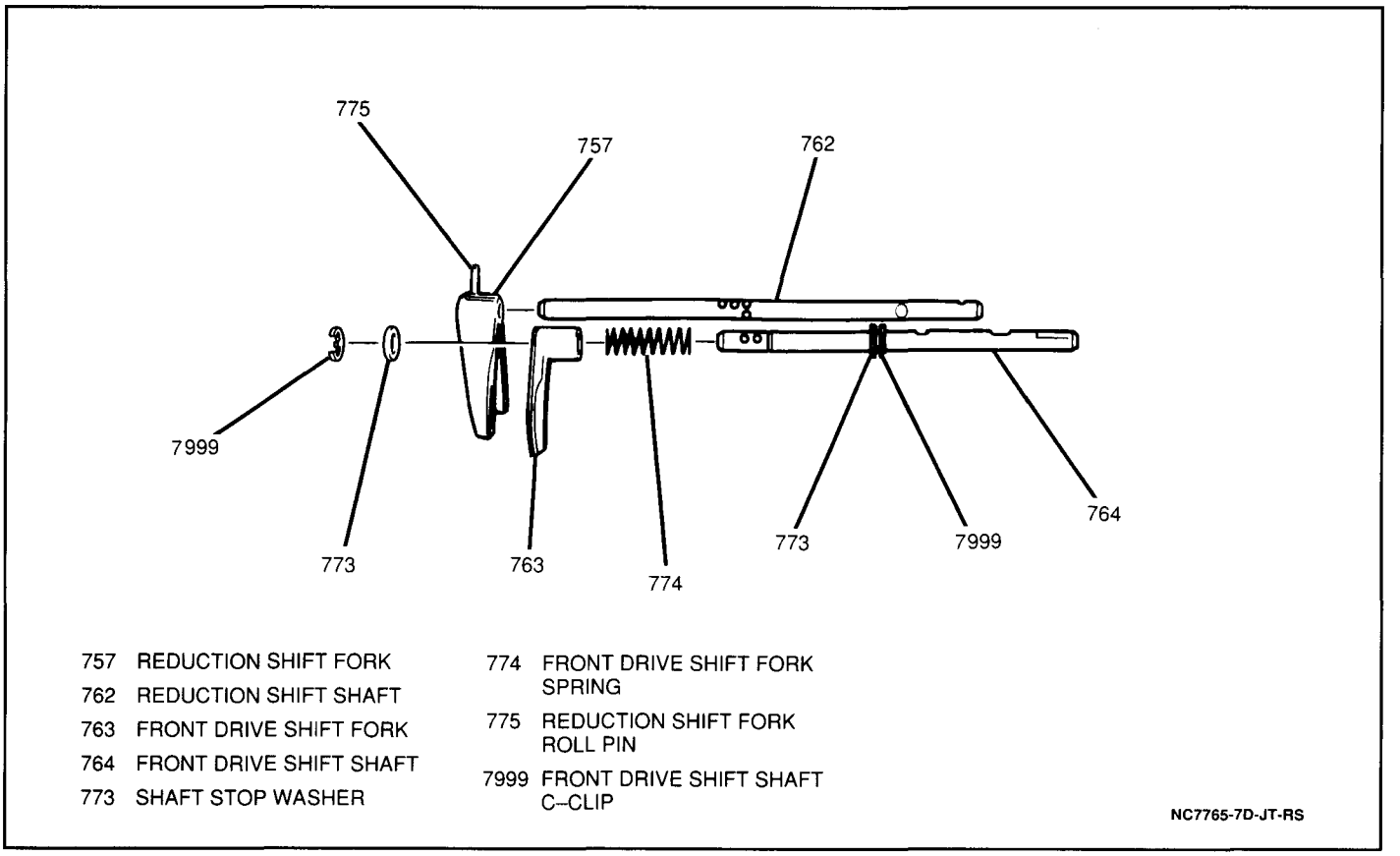

Figure 66 Assembling Shift Shafts and Forks

2. Reduction shift fork onto reduction shift shaft; secure with reduction shift fork roll pin (Figure 66).
3. Input gear bearing onto input gear using a J 6133-01 and a press arbor (Figure 67).

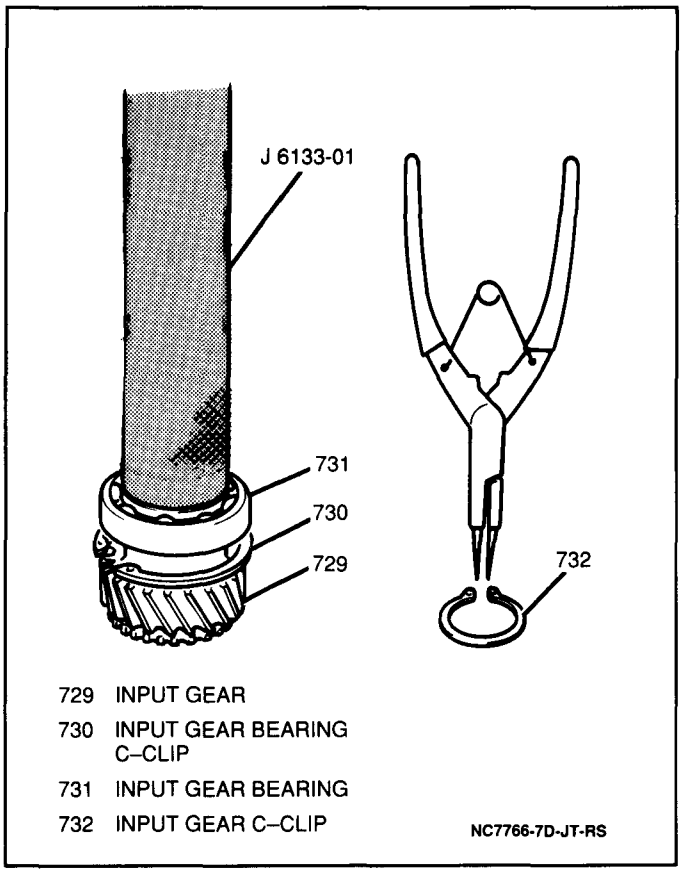

Figure 67 Installing Input Gear Bearing and C-Clip

4. Input gear C-clip onto input gear (Figure 67).
5. Input gear oil seal into front case using a J 37752 (Figure 68).

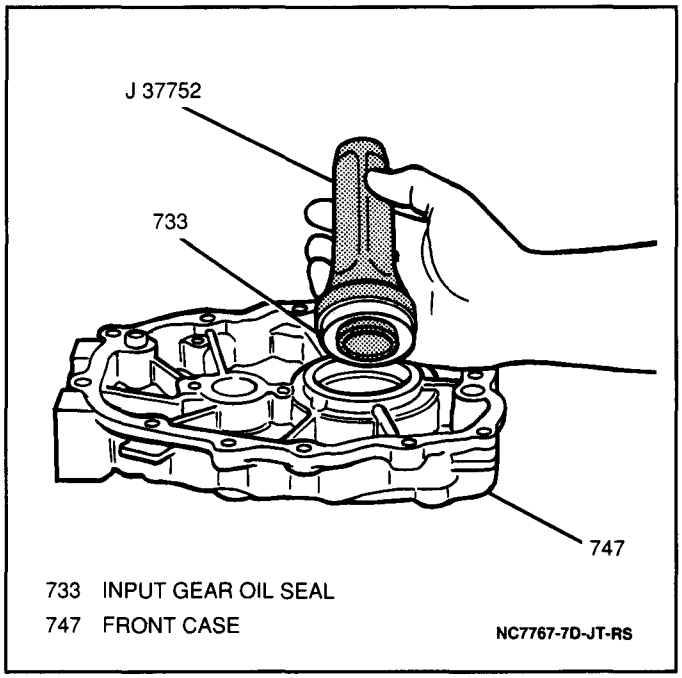

Figure 68 Installing Input Gear Oil Seal

- Apply Loctite® 414 GM P/N 12345093, or equivalent, to the threaded portion of the oil guide bolt.

6. Oil guide in the rear case; secure with one bolt.

Tighten

- Oil guide bolt to 10 N·m (89 lb.in.).

7. Input gear into front case using a J 35871 and a press arbor (Figure 69).

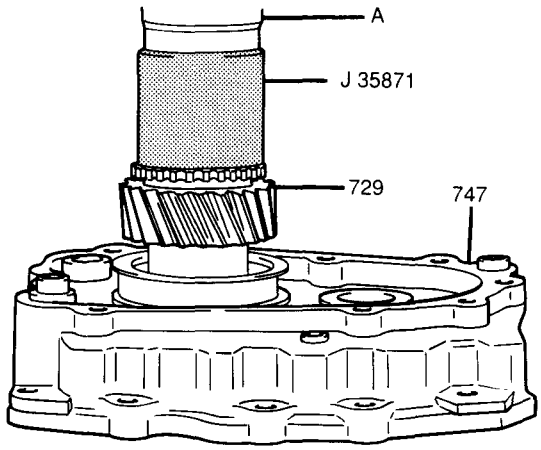

A PRESS ARBOR
729 INPUT GEAR
747 FRONT CASE
NC0739-7D-JT-RS

Figure 69 Installing Input Gear

8. Input gear bearing C-clip onto input gear.

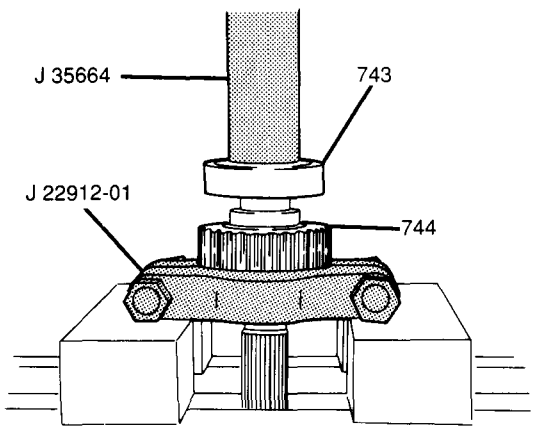

743 FRONT OUTPUT SHAFT BEARING
744 FRONT OUTPUT SHAFT
NC7769-7D-JT-RS

Figure 70 Installing Rear Shaft Bearing on Output Front Shaft

9. Front output shaft bearings onto front output shaft using a J 35664 with a J 22912-01 and a press arbor (Figures 70 and 71).

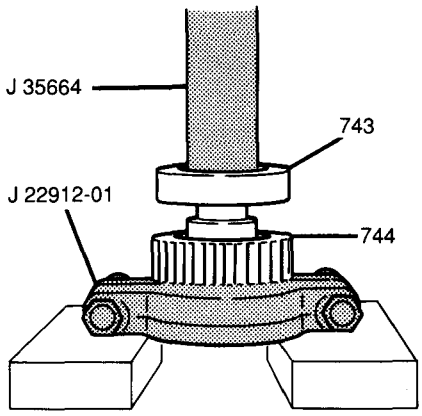

743 FRONT OUTPUT SHAFT BEARING
744 FRONT OUTPUT SHAFT
NC7770-7D-JT-RS

Figure 71 Installing Front Shaft Bearing on Output Front Shaft

10. Front output shaft needle bearing into center case using a J 37757 (Figure 72).

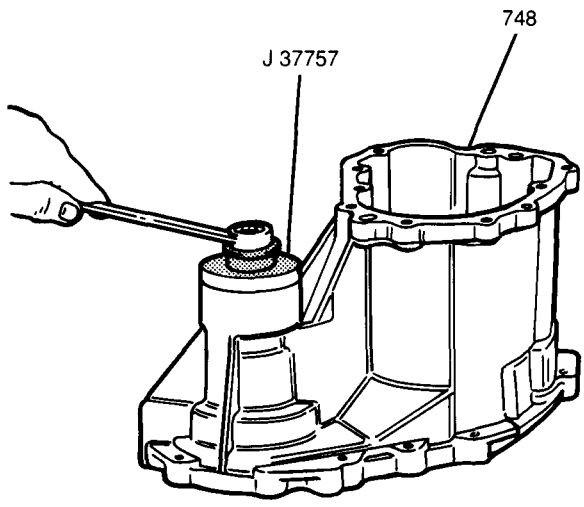

748 CENTER CASE
NC7771-7D-JT-RS

Figure 72 Installing Front Output Shaft Needle Bearing

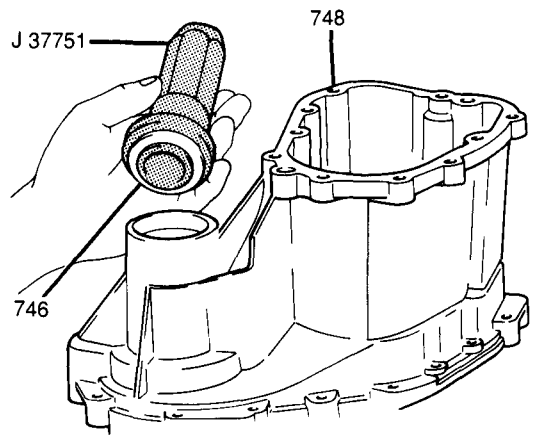

746 FRONT OUTPUT SHAFT OIL SEAL
748 CENTER CASE
NC7772-7D-JT-RS

Figure 73 Installing Front Output Shaft Oil Seal

11. Front output shaft oil seal into center case using a J 37751 (Figure 73).
12. Case gutter into center case; secure with one bolt.

Tighten

- Case gutter bolt to 12 N·m (106 lb.in.).

13. Front output shaft into center case with a plastic mallet.
14. Rear output shaft front bearing onto rear output shaft using a J 37753 with the J 35664 and a press arbor (Figure 74).

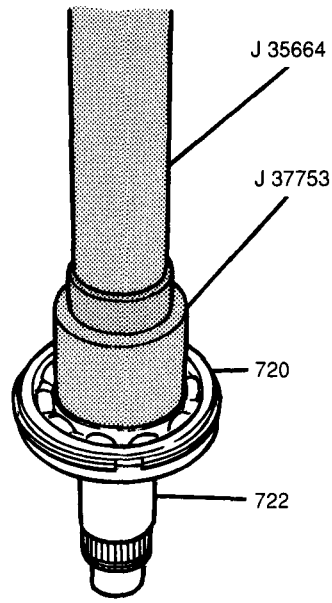

720 REAR OUTPUT SHAFT FRONT BEARING
722 REAR OUTPUT SHAFT
NC7773-7D-JT-RS

Figure 74 Installing Rear Output Shaft Front Bearing

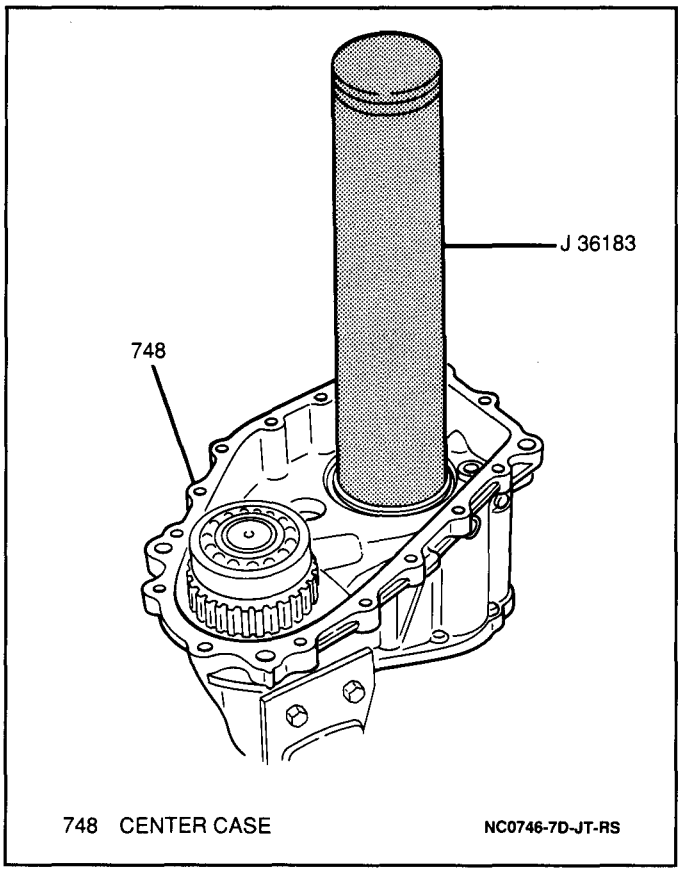

Figure 75 Installing Rear Output Shaft

15. Rear output shaft into center case using a J 36183 (Figure 75).
- Apply J 36850 to the low output gear needle bearing.
16. Low output gear needle bearing, low output gear and reduction clutch hub onto rear output shaft (Figure 76).

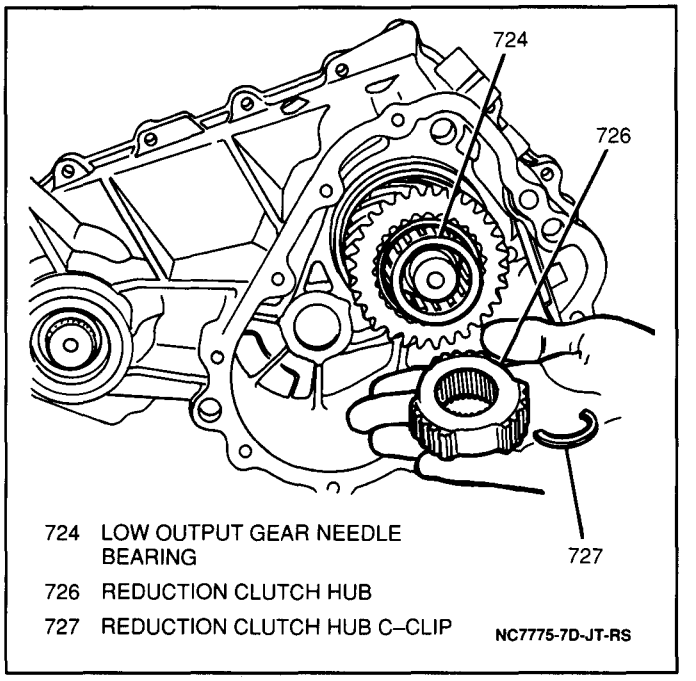

Figure 76 Installing Low Output Gear, Needle Bearing and Reduction Clutch Hub

17. Reduction hub C-clip onto rear output shaft (Figure 76).
18. Interlock ball into center case passage and push against the interlock notch of the front drive shift shaft.
19. Front drive shift shaft, front drive shift fork, front drive clutch sleeve and front drive clutch hub onto rear output shaft in rear of center case aligning marks on the front drive clutch hub and sleeve.
20. Reduction shift shaft, reduction shift fork and reduction clutch sleeve onto rear output shaft in front of center case aligning marks on the reduction clutch hub and sleeve.

- Apply RTV silicone sealer GM P/N 1052917, or equivalent, to the two rubber plugs.
- Apply a light coat of Loctite® pipe sealant GM P/N 1052080, or equivalent, to the threaded portion of the two locating screws.

21. Two locating balls, two locating springs, two rubber plugs, two washers and two locating screws in the center case.

Tighten

- Locating screws to 26 N·m (19 lb.ft.).

22. New countershaft friction ring onto countershaft using a J 39497 and a press arbor (Figure 77).

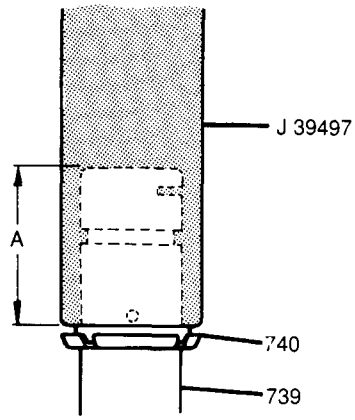

A 39.5 mm (1.56")
739 COUNTERSHAFT
740 COUNTERSHAFT FRICTION RING
NC7776-7D-JT-RS

Figure 77 Installing Countershaft Friction Ring

Important

- Friction ring MUST be installed at precisely 39.5 mm (1.56-inch) from the end of the countershaft (Figure 77).

23. New countershaft O-ring onto countershaft.
- Apply J 36850 to the new countershaft O-ring.
- Apply J 36850 to the counter shaft needle bearings.

24. Countershaft spacer, countershaft needle bearings and counter gear to countershaft.
25. Countershaft washer balls and washers to countershaft.
26. Countershaft assembly into the center case.
- Apply RTV silicone sealer GM P/N 1052917, or equivalent, to the front case and center case mating surfaces.

27. Front case to center case; secure with nine bolts.

Tighten

- Front case bolts to 23 N·m (17 lb.ft.).

- Apply Loctite® 414 GM P/N 12345093, or equivalent, to the threaded portion of the countershaft plate bolt.

28. Countershaft case plate to front case; secure with one bolt.

Tighten

- Countershaft case plate bolt to 23 N·m (17 lb.ft.).

29. Rear output shaft needle bearing in the rear case using the J 37757 (Figure 78).

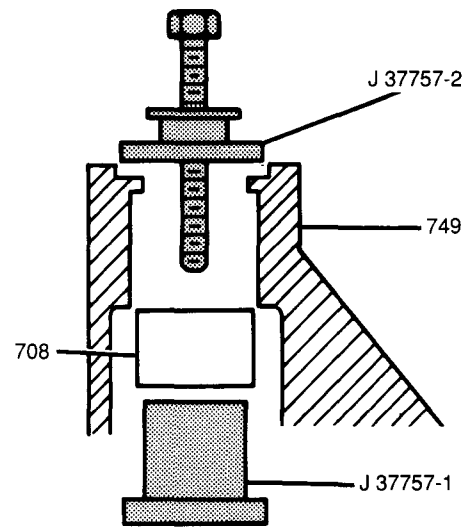

708 REAR OUTPUT SHAFT NEEDLE BEARING
749 REAR CASE
NC7777-7D-JT-RS

Figure 78 Installing Rear Output Shaft Needle Bearing

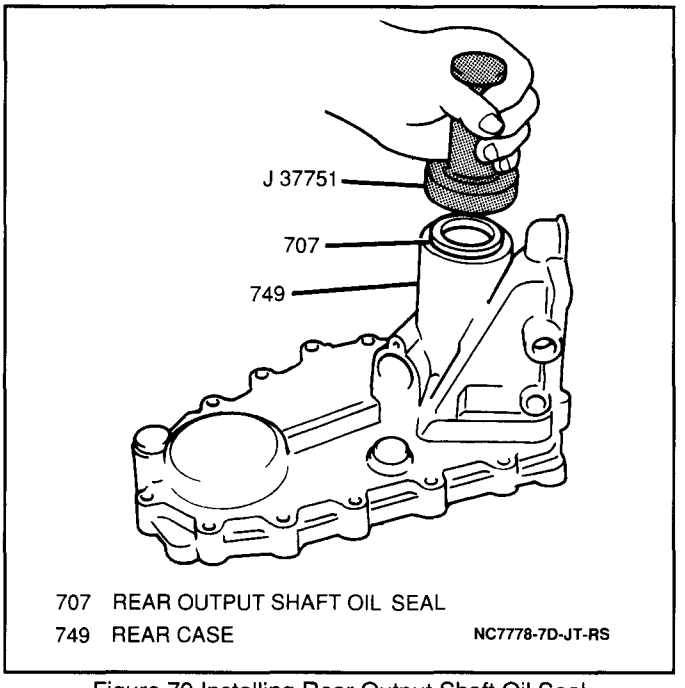

Figure 79 Installing Rear Output Shaft Oil Seal

30. Rear output shaft oil seal into rear case using the J 37751 (Figure 79).
- Apply J 36850 to the shaft ball to retain it in place on the rear output shaft.

31. Rear output shaft washer ball, drive sprocket and drive chain onto rear output shaft and front output shaft (Figure 80).

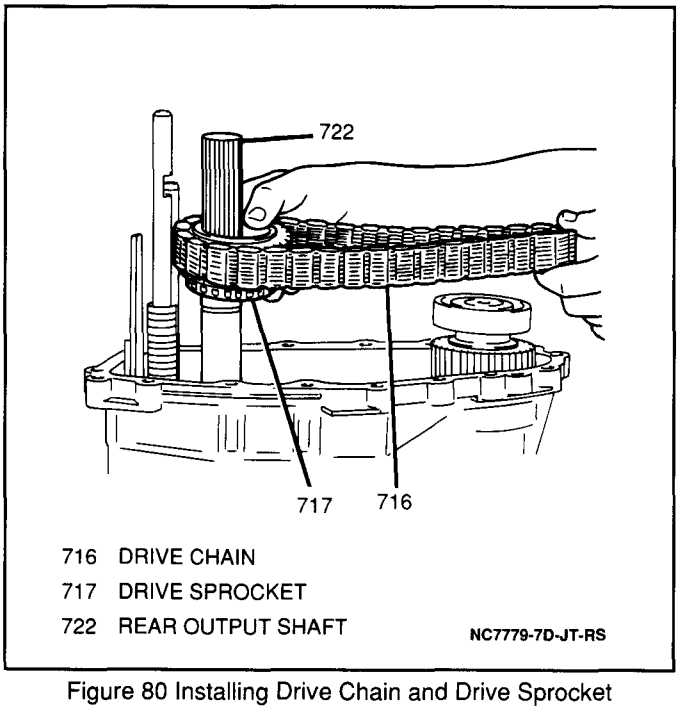

Figure 80 Installing Drive Chain and Drive Sprocket

- Apply J 36850 to the drive sprocket needle bearing.

32. Drive sprocket needle bearing and drive sprocket bushing onto rear output shaft.

33. Rear output shaft rear bearing onto rear output shaft using the J 35664 (Figure 81).

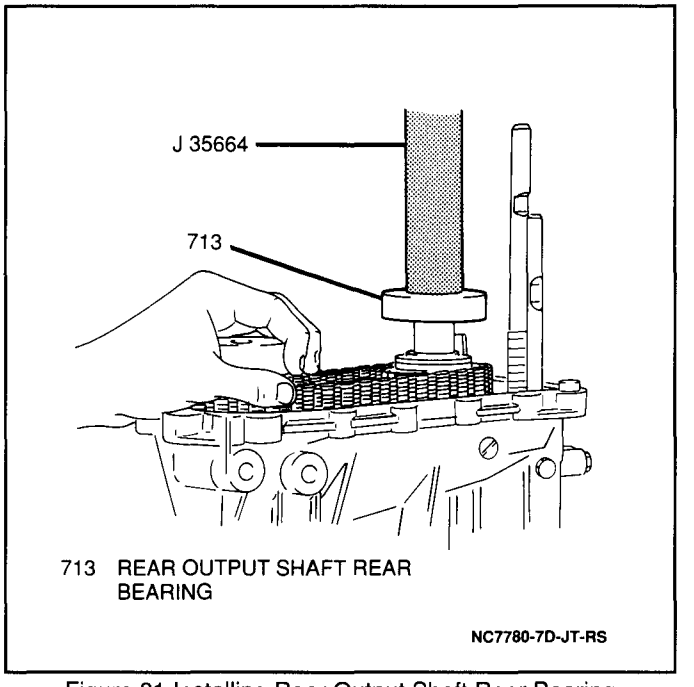

Figure 81 Installing Rear Output Shaft Rear Bearing

34. Rear output shaft rear bearing C-clip onto rear output shaft.
35. Speedometer drive gear on output rear shaft; secure with speedometer drive gear C-clip.

Measure

Tool Required:
J 26900-5 Vernier Caliper

A. Rear case bearing bore depth using a J 26900-5 and a straightedge. Place a straightedge across the rear case and measure the bearing bore depth including the width of the straightedge and record the measurement (Figure 82).
B. Using the same straightedge and the J 26900-5, measure the height of the rear output shaft rear bearing on the rear output shaft including the width of the straightedge and record the measurement (Figure 83).
C. Subtract the height of the bearing on the rear output shaft from the rear case bearing bore depth to find shim clearance.
D. Select the appropriate shim thickness from the selective shim chart (Figure 84).

Important

- If shim clearance is 0 to 0.13 mm (0 to 0.005-inch) or less, no shim is needed.

- Apply J 36850 to the selective shim to retain it in place on top of the rear output shaft rear bearing.

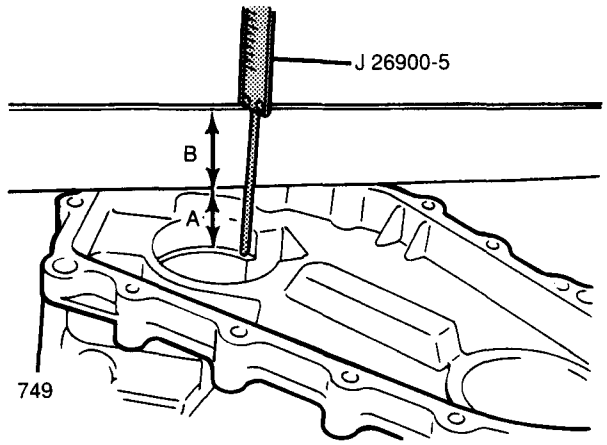

A REAR CASE BEARING BORE DEPTH
B STRAIGHTEDGE WIDTH
749 REAR CASE
NC0750-7D-JT-RS

Figure 82 Measuring Rear Case Bearing Bore Depth

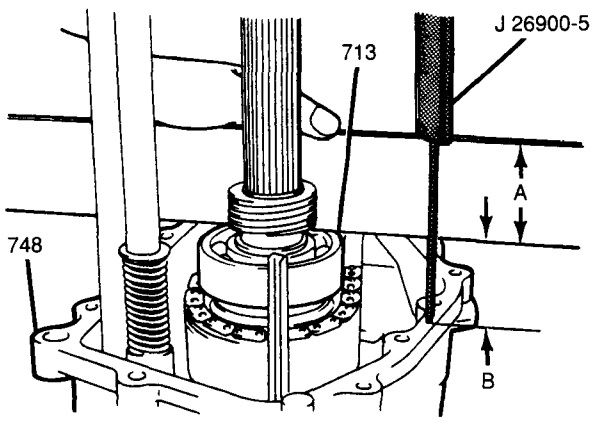

A STRAIGHTEDGE WIDTH
B REAR OUTPUT SHAFT REAR BEARING HEIGHT
713 REAR OUTPUT SHAFT REAR BEARING
748 CENTER CASE
NC7782-7D-JT-RS

Figure 83 Measuring Rear Output Shaft Rear Bearing Bearing Height

CLEARANCE	SHIM SIZE
0 – 0.13 mm 0 – 0.005"	SHIM NOT NEEDED
0.13 – 0.23 mm 0.005 – 0.009"	0.1 mm 0.004"
0.23 – 0.33 mm 0.009 – 0.013"	0.2 mm 0.008"
0.33 – 0.43 mm 0.013 – 0.017"	0.3 mm 0.012"
0.43 – 0.53 mm 0.017 – 0.021"	0.4 mm 0.016"
0.53 – 0.58 mm 0.021 – 0.023"	0.5 mm 0.020"

NC1535-7D-JT-RS

Figure 84 Selective Shim Chart

36. Selective shim to top of rear output shaft rear bearing.
    - Apply RTV silicone sealer GM P/N 1052917, or equivalent, to the rear case mating surface (Figure 85).
37. Rear case to center case; secure with fifteen bolts.

Tighten

- Rear case bolts to 23 N·m (17 lb.ft.).

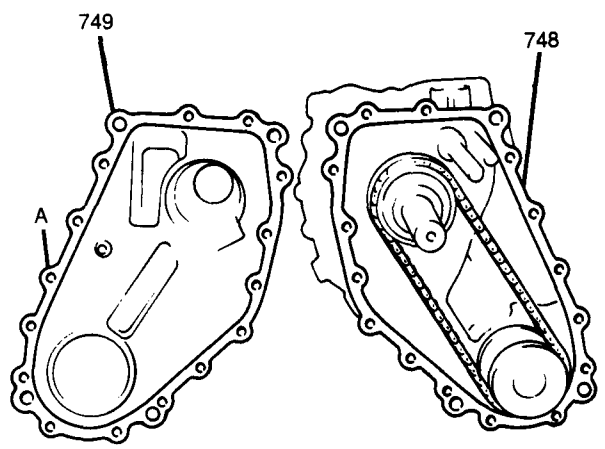

A APPLY RTV SILICONE SEALER GM P/N 1052917, OR EQUIVALENT
748 CENTER CASE
749 REAR CASE
NC7784-7D-JT-RS

Figure 85 Rear and Center Case Mating Surfaces

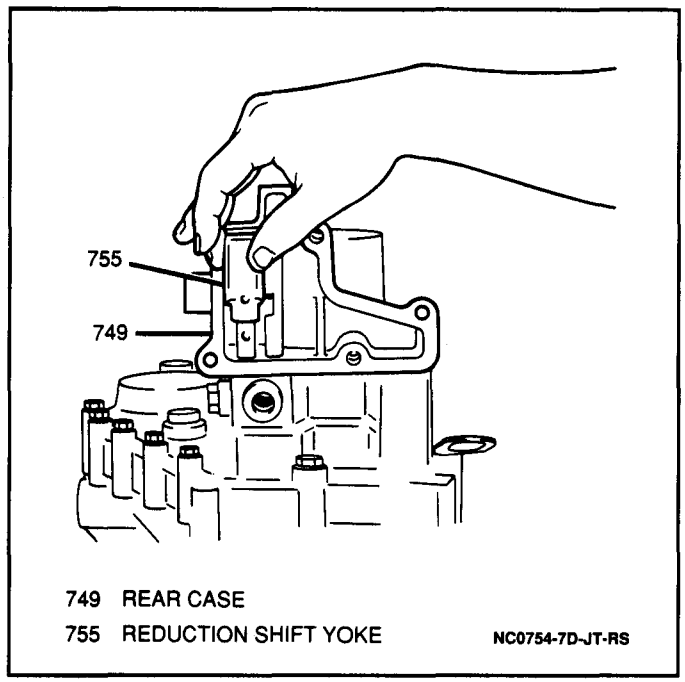

Figure 86 Installing Reduction Shift Yoke

38. Reduction shift yoke onto reduction shift shaft in rear case; secure with reduction shift yoke roll pin (Figure 86).
- Apply a light coat of Loctite® pipe sealant GM P/N 1052080, or equivalent, to the threaded portion of the select return spring bolt.

39. Select return pin, select return ball, washer, select return spring and select return spring bolt into rear case.

Tighten

- Select return spring bolt to 35 N·m (25 lb.ft.).

- Apply RTV silicone sealer GM P/N 1052917 to the rear case and gearshift lever case mating surfaces.

40. Gearshift lever case to rear case; secure with five bolts.

Tighten

- Gearshift lever case bolts to 23 N·m (17 lb.ft.).

- Apply J 36850 to the speedometer driven gear case O-ring.

41. Speedometer driven gear case; secure with one bolt.

Tighten

- Speedometer driven gear case retaining bolt to 10 N·m (89 lb.in.).

Inspect

- Four-wheel drive switch O-ring for cuts or damage. Replace as necessary.

- Apply J 36850 to the four-wheel drive switch O-ring.

42. Steel ball and four-wheel drive switch into the rear case.

Tighten

- Four-wheel drive switch to 19 N·m (14 lb.ft.).

SPECIFICATIONS

FASTENER TORQUES

Transfer Case Oil Level/Filler Plug	28 N·m (21 lb.ft.)
Transfer Case Drain Plug	28 N·m (21 lb.ft.)
Transfer Case Skid Plate Bolts	54 N·m (40 lb.ft.)
Four-Wheel Drive Switch	19 N·m (14 lb.ft.)
Speedometer Driven Gear Case Retaining Bolt	10 N·m (89 lb.in.)
Front Propeller Shaft Bolts and Nuts	50 N·m (37 lb.ft.)
Rear Propeller Shaft Bolts and Nuts	50 N·m (37 lb.ft.)
Torque Stopper Mounting Bolts	50 N·m (37 lb.ft.)
Torque Stopper Bushing Through Bolt and Nut	50 N·m (37 lb.ft.)
Speedometer Cable Clip Bolt	10 N·m (89 lb.in.)
Transfer Case Rear Mount Bolt	50 N·m (37 lb.ft.)
Transfer Case Crossmember Bolts	50 N·m (37 lb.ft.)
Transfer Case-to-Transmission Bolts	28 N·m (21 lb.ft.)
Torque Mount Bracket Bolts	50 N·m (37 lb.ft.)
Forward Pipe/Three Way Catalytic Converter (TWC) Nuts	50 N·m (37 lb.ft.)
Muffler Pipe-to-Three Way Catalytic Converter (TWC) Bolts	50 N·m (37 lb.ft.)
Exhaust Pipe Bracket Bolts and Nuts	60 N·m (44 lb.ft.)
Fan Shroud Bolts	10 N·m (89 lb.in.)
Oil Guide Bolt	10 N·m (89 lb.in.)
Case Gutter Bolt	12 N·m (106 lb.in.)
Locating Screws	26 N·m (19 lb.ft.)
Front Case Bolts	23 N·m (17 lb.ft.)
Countershaft Case Plate Bolt	23 N·m (17 lb.ft.)
Rear Case Bolts	23 N·m (17 lb.ft.)
Select Return Spring Bolt	35 N·m (25 lb.ft.)
Gearshift Lever Case Bolts	23 N·m (17 lb.ft.)

TRANSFER CASE SPECIFICATIONS

Locating Spring Length:	
Standard Length	19.5 mm (0.768 in.)
Service Limit	18.0 mm (0.709 in.)
Shift Fork-to-Clutch Sleeve Clearance (Maximum)	1.0 mm (0.039 in.)
Friction Ring Depth from end of Countershaft	39.5 mm (1.56 in.)
Rear Output Shaft Rear Bearing-to-Rear Case Clearance	0.0-0.13 mm (0.0-0.005 in.)

FLUID CAPACITIES (APPROXIMATE)

Transfer Case Drain and Refill	1.7 liters (1.8 qts.)
Oil Recommended	Synthetic 75W-90 GL4 Lubricant GM P/N 12345871, or equivalent

SERVICE PARTS INFORMATION

Component Name Used in Section 7D	Reference Name in Service Parts Catalog	Group number
Front Case	Case, Transfer Case Front	4.510
Center Case	Case, Transfer Case Center	4.510
Rear Case	Case, Transfer Case Rear	4.510
Gearshift Lever Case	Case, Transfer Case Gear Shift Lever	4.570
Speedometer Driven Gear Case Retaining Bolt	Bolt, HFH, M6X1X16, 14.5 THD,7T (AR)	8.900
Speedometer Driven Gear Case	Case, Transfer Case Speedometer Driven Gear	4.329
Speedometer Driven Gear Case Roll Pin	Pin, Transfer Case Driven Gear	4.337
Speedometer Driven Gear	Gear, Transfer Case Speedometer Driven	4.337
Speedometer Driven Gear Case O-ring	O-Ring, Transfer Case Speedometer Gear	4.330
Speedometer Driven Gear Lip Seal	Seal, Transfer Case Oil	4.330
Rear Output Shaft Oil Seal	Seal, Transfer Case Center and Rear Oil	4.520
Rear Output Shaft Needle Bearing	Bearing, Transfer Case Center and Rear Needle	4.520
Speedometer Drive Gear C-clip	Circlip, Transfer Case Speedo Gear	4.338

Speedometer Drive Gear	Gear, Transfer Case Speedo Drive	4.343
Rear Output Shaft Rear Bearing C-clip	Circlip, Transfer Case Countershaft Bearing	4.525
Selective Shim	Shim, Output Shaft	4.525
Rear Output Shaft Rear Bearing	Bearing, Transfer Case Rear Output Shaft	4.520
Drive Sprocket Bushing	Bushing, Transfer Case Sprocket	4.520
Drive Sprocket Needle Bearing	Bearing, Transfer Case Drive Sprocket Needle	4.520
Drive Chain	Chain, Transfer Case Drive	4.535
Drive Sprocket	Sprocket, Transfer Case Drive	4.535
Front Drive Clutch Sleeve	Sleeve, Transfer Case Front Drive Clutch	4.540
Front Drive Clutch Hub	Hub, Transfer Case Front Drive Clutch	4.535
Rear Output Shaft Front Bearing	Bearing, Transfer Case Countershaft	4.520
Rear Output Shaft Washer Ball	Ball, Transfer Case Countershaft	4.525
Rear Output Shaft	Shaft, Transfer Case Output Rear	4.530
Low Output Gear	Gear, Transfer Case Output Low	4.535
Low Output Gear Needle Bearing	Bearing, Transfer Case Low Gear	4.520
Reduction Clutch Sleeve	Sleeve, Transfer Case Reduction Shift	4.540
Reduction Clutch Hub	Hub, Transfer Case Reduction Clutch	4.535
Reduction Clutch Hub C-clip	Circlip, Transfer Case Reduction Clutch Hub	4.525
Input Gear Needle Bearing	Bearing, Transfer Case Input Gear Needle	4.520
Input Gear	Gear, Transfer Case Input	4.535
Input Gear Bearing C-clip	Circlip, Transfer Case Input Gear Bearing	4.525
Input Gear Bearing	Bearing, Transfer Case Input Gear	4.520
Input Gear C-clip	Circlip, Transfer Case Input Gear	4.525
Input Gear Oil Seal	Seal, Transfer Case Input Gear Oil	4.515
Countershaft Washer	Washer, Transfer Case Countershaft	4.525
Countershaft Needle Bearing	Bearing, Transfer Case Countershaft Needle	4.520
Counter Gear	Gear, Transfer Case Countershaft	4.535
Countershaft Spacer	Spacer, Transfer Case Countershaft	4.525
Countershaft Washer Ball	Ball, Transfer Case Countershaft Washer	4.525
Countershaft	Shaft, Transfer Case Main	4.530
Countershaft Friction Ring	Ring, T/F Counter Gear Friction	4.525
Countershaft O-ring	O-Ring, Transfer Case Countershaft	4.515
Countershaft Case Plate	Plate, Transfer Case Countershaft	4.525
Front Output Shaft Bearing	Bearing, Transfer Case Front Output Shaft	4.520
Front Output Shaft	Shaft, Transfer Case Output Front	4.530
Front Output Shaft Needle Bearing	Bearing, Transfer Case Center and Rear Needle	4.520
Front Output Shaft Oil Seal	Seal, Transfer Case Center and Rear Oil	4.520
Select Return Spring Bolt	Bolt, Transfer Case Gear Shift Return Spring	4.555
Select Return Spring	Spring, Transfer Case Gear Shift Select Return	4.557
Select Return Ball	Ball, Transfer Case Gear Shift Select Return	4.555
Select Return Pin	Pin, Transfer case Gear Select Return	4.555
Reduction Shift Yoke	Yoke, Transfer Case Reduction Gear Shift	4.560
Reduction Shift Yoke Roll Pin	Pin, Transfer Case Gear Shift Fork and Yoke	4.555
Reduction Shift Fork	Fork, Transfer Case Reduction Gear Shift	4.555
Rubber Plug	Plug, Transfer Case Locating	4.510
Locating Balls	Ball, Transfer Case Gear Shift	4.555
Locating Springs	Spring, Transfer Case Gear Shifting Locating	4.557
Locating Screws	Screw, Transfer Case Gear Shifting Locating	4.555
Reduction Shift Shaft	Shaft, Transfer Case Reduction Gear Shift	4.555
Front Drive Shift Fork	Fork, Transfer Case Front Drive Gear Shift	4.555
Front Drive Shift Shaft	Shaft, Transfer Case Front Drive Gear Shift	4.555
Four-Wheel Drive Switch	Switch ASM, Transfer Case 4 Wheel Drive	4.563
Countershaft Case Plate Bolt	Bolt, Hex (M8X1.25X20)(AR)	8.900
Case Gutter Bolt	Bolt, Transfer Center Case Gutter	4.510
Case Gutter	Gutter, Transfer Case Center Case	4.510
Oil Guide	Plate, Transfer Case Rear Case	4.510
Oil Guide Bolt	Bolt, Transfer Case Rear Case Plate	4.510
Shaft Stop Washer	Washer, Transfer Case Front Drive Shaft Stop	4.555
Front Drive Shift Fork Spring	Spring, Transfer Case Front Drive Shift Fork	4.557
Reduction Shift Fork Roll Pin	Pin, Transfer Case Gear Shift Fork and Yoke	4.555
Transfer Case Oil Level/Filler Plug	Plug, Transfer Case Oil Filler and Level	4.510
Transfer Case Drain Plug	Plug, Transfer Case Oil Drain	4.510

Transfer Case Skid Plate	Shield, Transfer Case (Skid Shield)	4.500
Transfer Case Skid Plate Bolts	Bolt, Transfer Case Shield	4.500
Transfer Case Crossmember	Member, Engine Rear Mounting	0.029
Gearshift Control Lever Knob	Knob, Transfer Case Gear Shift Control	4.570
Gearshift Control Lever	Lever, Transfer Case Gear Shift Control	4.570
Gearshift Control Lever Boot	Boot, Transfer Case Gear Shift Lever	4.570
Gearshift Control Lever Pivot	Cover, Transfer Case Gear Shift Lever Case	4.010
Speedometer Cable Clip	Clip, Speedo Cable #3	4.342
Speedometer Cable Clip Bolt	Bolt, Hex, M6X1X16 9.8 ZP	8.900
Torque Stopper Housing	Housing, Engine Torque Stopper Bushing	0.027
Torque Stopper Bushing	Bushing, Engine Mounting Torque Stopper	0.027
Torque Stopper Mounting Bolts	Bolt, Housing, Torque Stopper	0.004
Transfer Case Crossmember Bolts	Bolt, Member Rear Mounting	0.004
Transfer Case Rear Mount	Mounting, Engine to Member Rear	0.027
Torque Stopper Bracket	Bracket, Engine Torque Stopper	0.029
Torque Stopper Bracket Bolts	Bolt, Bracket Torque Stopper	0.004

SPECIAL TOOLS

1
J 28428-D

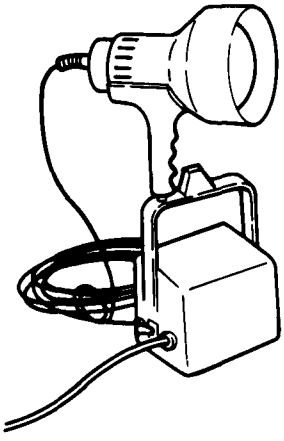

2
J 28431-6

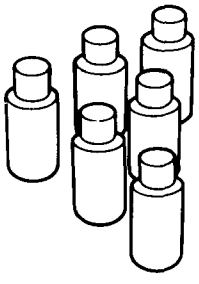

3
J 34833

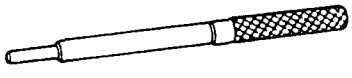

4
J 36850

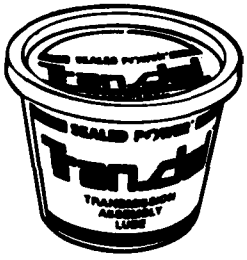

5
J 26941

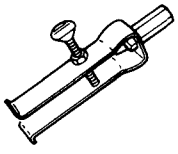

6
J 23907

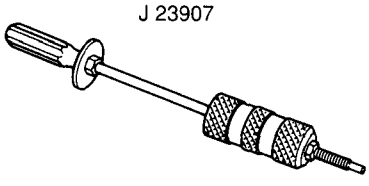

7
J 37751

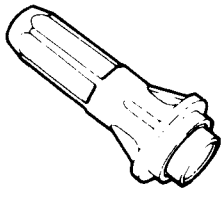

8
J 21777-101

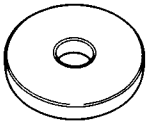

1 HIGH INTENSITY BLACK LIGHT
2 FLOURESCENT OIL ADDITIVE
3 VALVE GUIDE REMOVER
4 TRANSJEL® LUBRICANT
5 NEEDLE BEARING PULLER
6 SLIDE HAMMER
7 OIL SEAL INSTALLER
8 SIDE BEARING DISC

NC7786-7D-JT-RS

9
J 37637

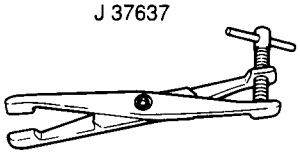

12
J 34757

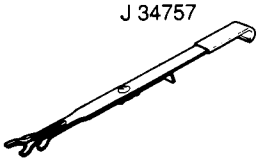

13
J 39497

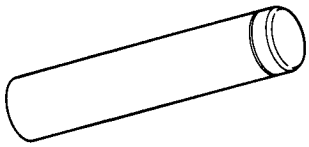

10
J 8433

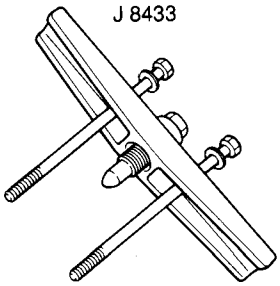

14
J 22912-01

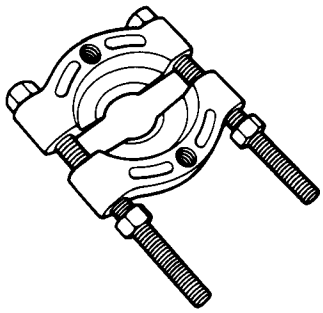

11
J 37756

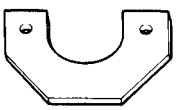

15
J 34844

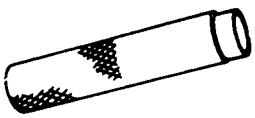

9 CASE SEPARATOR
10 BEARING PULLER
11 OUTPUT SHAFT BEARING PULLER ADAPTER
12 OUTPUT SHAFT RING REMOVER
13 FRICTION RING REMOVER AND INSTALLER
14 SPLIT PLATE
15 FRONT SHAFT BEARING REMOVER

PC7787-7D-EJ-RS

16
J 26900-5

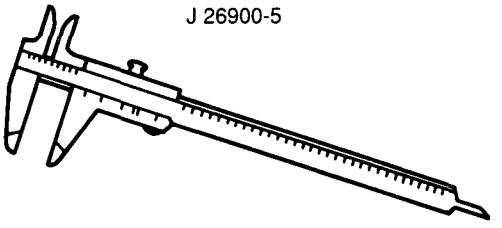

17
J 6133-01

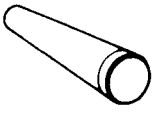

18
J 37752

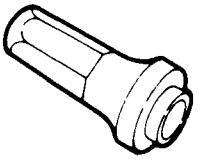

19
J 35871

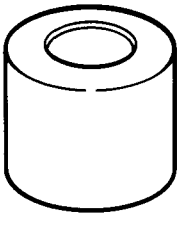

20
J 35664

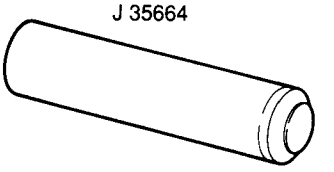

21
J 37757

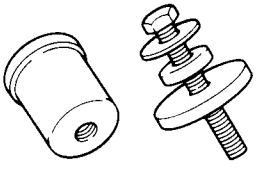

22
J 37753

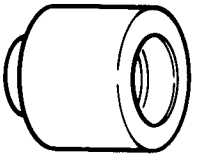

23
J 36183

24
J 28406

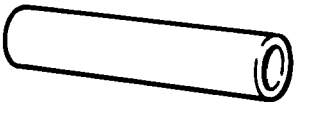

16 VERNIER CALIPER
17 INPUT GEAR BEARING INSTALLER
18 OIL SEAL INSTALLER
19 INPUT GEAR INSTALLER
20 PRESS TUBE/BEARING INSTALLER
21 NEEDLE BEARING INSTALLER
22 BEARING INSTALLER
23 OUTPUT REAR SHAFT INSTALLER
24 INPUT GEAR BEARING REMOVER

PC7788-EJ-JT-RS

SECTION 8

Body and Chassis Electrical

CONTENTS

Electrical Diagnosis 8A-CONTENTS
Lighting Systems and Horn 8B-1
Instrument Panel, Gages and Console 8C-1
Windshield Wiper/Washer System 8E-1

Geo

SECTION 8A
ELECTRICAL DIAGNOSIS
Geo TRACKER

	CELL
Index	1
Introduction	2
Symbols	3
Troubleshooting	4
Repair Procedures	5
Vehicle Zoning	9
Power Distribution	10
Fuse Block Details	11
Ground Distribution	14
Engine Controls: 1.6L VIN U	20
Starter and Charging	30
Coolant Fan	31
Vehicle Speed Sensor	33
Horn	40
Brake Warning	41
Antilock Brake	44
Data Link Connector (DLC)	50
Heater	60
Defogger	61

	CELL
HVAC: Compressor Control	64
Audible Warnings	76
Instrument Cluster: With Gages	81
Wiper/Washer	90
Wiper/Washer: Pulse	91
Rear Wiper/Washer	92
Headlights	100
Headlights: Daytime Running Lights	102
Exterior Lights	110
Backup Lights	112
Interior Lights	114
Brake Transmission Shift Interlock	138
Radio/Audio System	150
Service Parts Information	200
Component Location Views	201
Harness Connector Faces	202
Harness Routing Views	203

INDEX

	PAGE
A/C Amplifier	8A-64-1
A/C Compressor Clutch	8A-64-1
A/C Compressor Clutch Relay	8A-64-0
A/C Condenser Fan Motor	8A-31-0
A/C Condenser Fan Relay	8A-31-0
A/C Fuse Holder	8A-64-0
A/C Fusible Link	8A-10-0
A/C Switch	8A-64-0
A/C Switch Fuse	8A-64-0
Audio Alarm Module	8A-76-0
Backup Lamp Switch	8A-112-0
Battery	8A-10-0
Blower Motor	8A-60-0
Blower Motor Resistor	8A-60-0
Blower Speed Selector Switch	8A-60-0
Brake Fluid Level Switch	8A-41-0
Brake Fluid Pressure Differential Switch	8A-41-0
Cigar Lighter	8A-11-3
Clutch Pedal Position (CPP) Switch	8A-30-0
Combination Switch	8A-100-0
Data Link Connector (DLC)	8A-50-0
Daytime Running Lights (DRL) Controller	8A-102-1
Daytime Running Lights (DRL) Resistor	8A-102-1
Distributor	8A-20-6
Dome Lamp Diode	8A-114-0
Dual Pressure Switch	8A-64-0
Duty Check Data Link Connector (DLC)	8A-20-1
Electronic Brake Control Module (EBCM)	8A-44-1
Engine Control Module (ECM)	8A-20-1
Engine Coolant Temperature (ECT) Sending Unit	8A-81-0
Engine Coolant Temperature (ECT) Sensor	8A-20-8
Engine Coolant Temperature (ECT) Switch	8A-64-1
Evaporative Emission Solenoid Purge Valve	8A-20-3
Evaporator Thermistor	8A-64-1
Exhaust Gas Recirculation Solenoid Vacuum (EGR SV) Valve	8A-20-3
Exhaust Gas Recirculation (EGR) Temperature Sensor	8A-20-8
Fluid Pressure Switch	8A-20-3
Four-Wheel Drive Switch	8A-44-1
Front Washer Pump	8A-90-0
Front Wiper Motor	8A-90-0
Fuel Gage Sending Unit	8A-81-0
Fuel Injector	8A-20-5
Fuel Pump	8A-20-5
Fuel Pump Relay	8A-20-4
Fuse Block	8A-11-0
Fusible Link Box	8A-10-0
Generator	8A-30-1
Heated Oxygen Sensor (HO2S)	8A-20-3
Horn	8A-40-0
Horn Brush/Slip Ring	8A-40-0
Horn Relay	8A-40-0
Horn Switch	8A-40-0
Idle Air Control (IAC) Valve	8A-20-5
Igniter	8A-20-7
Ignition Coil	8A-20-6
Ignition Key Warning Switch	8A-76-0
Ignition Switch	8A-10-0
Illumination Controller	8A-114-1
Instrument Panel Cluster Assembly	8A-81-0
Intake Air Temperature (IAT) Sensor	8A-20-8
LH Door Jamb Switch	8A-114-0
LH Front Speaker	8A-150-2
LH Rear Speaker	8A-150-2
Main Relay	8A-20-0
Malfunction Indicator Lamp (MIL) Cancel Switch	8A-20-0
Manifold Absolute Pressure (MAP) Sensor	8A-20-8
Noise Suppressor Condenser	8A-20-6
Noise Suppressor Filter	8A-20-7
Oil Pressure Switch	8A-81-0
Park/Neutral Position Switch	8A-112-0
Parking Brake Switch	8A-41-0
Power Steering Pressure Switch	8A-20-5
Pressure Limit Valve	8A-44-1
Radio	8A-150-0
Rear Defogger	8A-61-0
Rear Defogger Switch	8A-61-0
Rear Washer Pump	8A-92-0
Rear Wheel Antilock (RWAL) Brake Data Link Connector (DLC)	8A-44-0
Rear Wheel Antilock (RWAL) Brake Relay	8A-44-0
Rear Wheel Antilock (RWAL) Brake Speed Sensor	8A-44-1
Rear Wiper Motor	8A-92-0
Rear Wiper/Washer Switch	8A-92-0
RH Door Jamb Switch	8A-114-0
RH Front Speaker	8A-150-2
RH Rear Speaker	8A-150-2
Seat Belt Switch	8A-76-0
Shift Lock Diode	8A-138-0
Shift Lock Relay	8A-138-0
Shift Lock Solenoid	8A-138-0
Starter Solenoid	8A-30-1
Stoplamp Switch	8A-110-4

INDEX

PAGE

Throttle Opener Solenoid Vacuum (TOSV) Valve 8A-20-5
Throttle Position (TP) Sensor 8A-20-8
Torque Converter Clutch Relay 8A-20-2
Torque Converter Clutch Solenoid 8A-20-3
Turn/Hazard Relay 8A-110-2

INTRODUCTION

DIAGNOSTIC INFORMATION

This section contains the following kinds of diagnostic information:

- Electrical Schematics
- Component Location Lists and Views
- Troubleshooting Hints
- System Diagnoses
- Circuit Operation Descriptions
- Harness Connector Faces
- Harness Routing Views

Using these elements together will make electrical troubleshooting faster and easier. Each element is described below.

The **Electrical Schematic** should always be your starting point in using this manual. The schematic shows the electrical current paths when a circuit is operating properly. It is essential to understand how a circuit *should* work before trying to figure out why it doesn't.

The **Component Location List** describes where the components of the circuit are in the vehicle. A brief statement of the location is given and also a reference to a drawing that shows the component and its connecting wires. These **Component Location Views** are in Cell 201.

The **Troubleshooting Hints** offer short-cuts or tests to help you determine the cause of a complaint. They are not intended to be a rigid procedure for solving electrical problems. Rather, Troubleshooting Hints represent a common-sense approach, based on an understanding of the circuit.

The **System Diagnosis** provides a procedure to follow that will locate the fault in a circuit. If your own knowledge of the system and the Troubleshooting Hints have not produced a quick fix, follow the System Diagnosis.

The final part of the text, the **Circuit Operation,** will help you understand the circuit. It describes the components and how the circuit operates.

The **Harness Connector Faces** show the cavity or terminal locations in all connectors which have four or more cavities. Together with the wire colors and terminals given in the schematic, they will help you locate test points. The drawings show the connector faces you see after the harness connector has been disconnected from a component. The socket half of the connector face is shown for in-line connectors. Harness Connector Faces are in Cell 202.

Harness Routing Views are found in Cell 203. These views show the routing of the major wiring harnesses and the in-line connectors between the major harnesses. These views will make troubleshooting easier when you are not sure about harness routing.

PAGE NUMBER

This section is organized into numbered "cells." Each cell addresses a specific operating system within the vehicle. All cells contain a circuit schematic and most cells contain diagnostic text and charts. In order to make vehicle-to-vehicle diagnosis simpler, cell numbers remain common across all vehicle lines. For example, Cell 34 covers the Cruise Control subsystem in all GM service publications.

Some cells may have more than one circuit schematic, such as Power Distribution, Interior Lights and Air Conditioning. The circuit you want can either be located by using the index, or by a quick look through the related cell.

All the engine circuits for a particular engine VIN type are in the same cell. This makes that cell easy to use, since schematics for other vehicles are not in your way. The instrument panel schematics are organized similarly. If you are working on a vehicle with a digital cluster, only the schematics that apply to that vehicle's digital cluster will be in the cell you use. Information on the Indicators/Gages Cluster will be in other cells.

INTRODUCTION

SCHEMATICS

Schematics break down the entire electrical system into individual circuits. You are not distracted by wiring which is not part of the circuit you're working on.

It is important to realize that no attempt is made on the schematic to represent components and wiring as they physically appear on the car. For example, a 4-foot length of wire is treated no differently in a schematic from a wire which is only a few inches long. The number of cavities for each connector is listed in the Component Location List. Similarly, switches and other components are shown as simply as possible, with regard to function only.

The following example shows how to read a horn schematic (Figure 1). Locate the horn schematic using the index. The circuit schematic will look similar to the one at the right. The schematic is read from top to bottom.

Voltage is applied to the Horn Relay at all times from the Clk/Cig Fuse. When the relay coil is grounded by closing the HORN SWITCH, the relay contacts close. When the relay contacts are closed, both the LH and RH HORNS are energized.

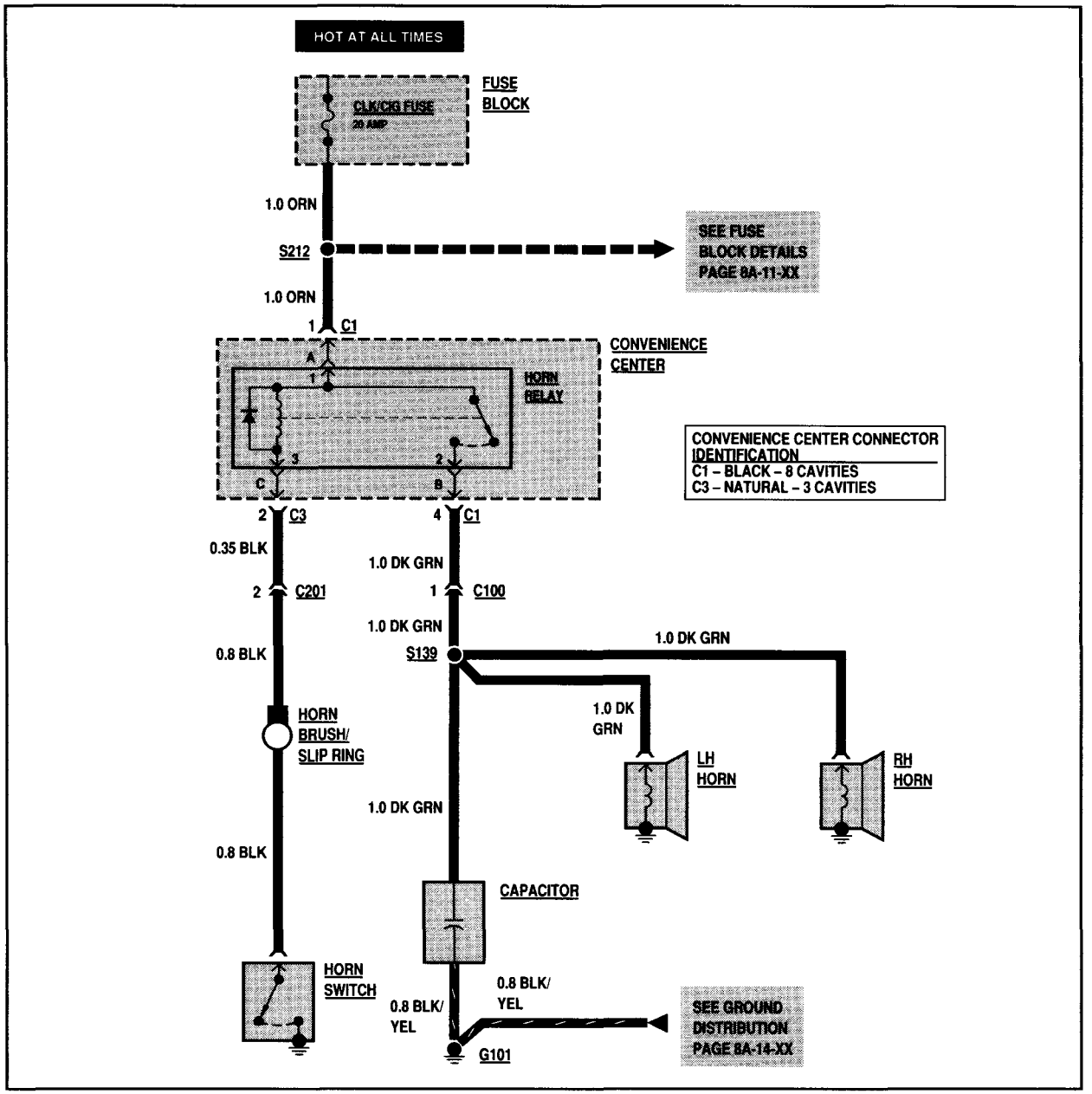

Figure 1 – Typical Horn Schematic

COMPONENT LOCATIONS

Use the Component Location list to locate the schematic's components on the vehicle (Figure 2). All component names used in the System Schematic are in the "COMPONENT" column of the Component Location list.

The component's location on the vehicle is verbally described in the "LOCATION" column. For example, the location description for the Convenience Center is "Under LH Side of I/P." References to LH and RH assume that you are sitting in the driver's seat.

A visual description of the component's location is provided in Cell 201. The page and figure reference for this art is found in the "FIGURE" column of the Component Location list. In this example, to find a picture of the Convenience Center installed on the vehicle, you are directed to Figure A on Page 201-06.

All connectors on the System Schematic are listed in the "CONNECTOR" section of the Component Location list. Connectors are labelled by their locational designation (such as C100 or C201). For further information regarding connector, ground, or splice numbers, refer to Vehicle Zoning (Cell 9).

Where connectors are listed, the number of cavities is provided. This represents the total number of cavities in the connector regardless of how many are actually used.

COMPONENT	LOCATION	FIGURE	CONNECTOR
Convenience Center	Under LH side of I/P	201-06/A	
Fuse Block	Under LH side of I/P	201-06/A	
Horn Brush/Slip Ring	Under Steering Wheel	201-05/E	202-07/A1
C100 (45 cavities)	LH side of Bulkhead	201-05/B	202-01/B3
C201 (11 cavities)	Under LH side of I/P, near C100	201-07/E	202-03/C2
S139	Front Lights Harness, behind LH Front Light Panel	201-08/C	
S212	I/P Harness, behind I/P, above Steering Column	201-09/D	
G101	LH front of Engine Compartment, behind Front Light Panel	201-08/D	

Figure 2 – Typical Entries in the Component Location List

The connector's location on the vehicle is verbally described in the "LOCATION" column. Again, a visual description is provided in Cell 201. The page and figure reference can be found in the "FIGURE" column. Further, a view of the connector face is provided in Cell 202. The page and position reference for the connector face view can be found in the "CONNECTOR" column of the Component Location list. For example, to view the face of the connector C100, you are directed to position B3 on Page 202-01.

INTRODUCTION

HARNESS CONNECTOR FACES

All connectors with more than three cavities are shown in one of the following locations throughout this section.

- The Engine Control Module (ECM) connectors are shown in Cells 20 through 29.
- The Electronic Brake Control Module (EBCM) connector is shown in Cell 44.
- The A/C Amplifier connector is shown in Cell 64.
- The Audio Alarm Module connector is shown in Cell 76.
- The Instrument Panel Cluster connectors are shown in Cells 80 through 89.
- The Daytime Running Lights (DRL) Controller connector is shown in Cell 102.
- The Radio Connector is shown in Cell 150.

In these cells, the harness connector faces are accompanied by a descriptive chart. These charts include wire color and circuit description.

All remaining connectors with more than three cavities are shown in Cell 202. The "Connector" column (fourth column) of the Component Location list in each cell will direct you to the correct location for each application. Any connector in Cell 202 with more than nine cavities will be accompanied by a descriptive chart.

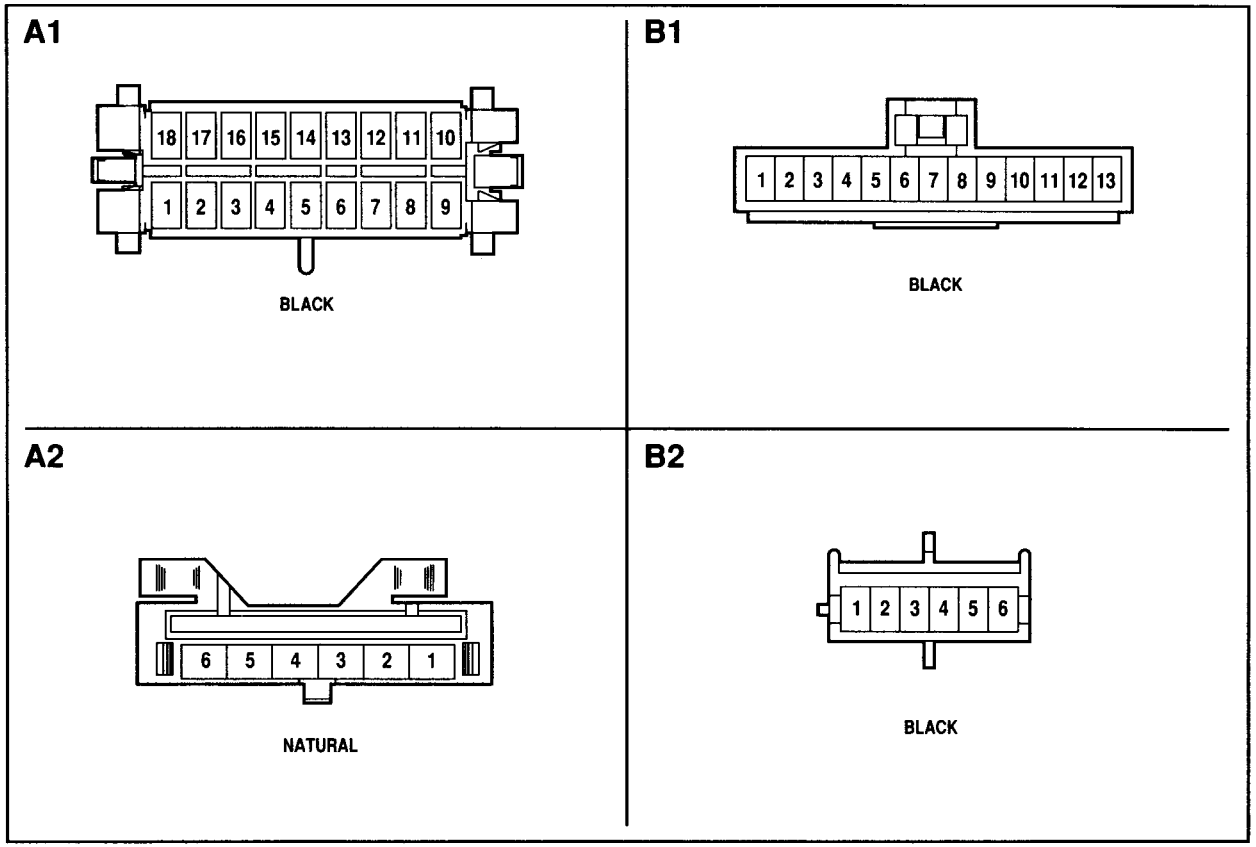

Figure 3 – Typical Harness Connector Faces

The connector's socket (female) half is usually shown (Figure 3). If an illustration of the socket half is not available, the pin (male) half will be shown. In addition, the connector's color is indicated.

If you need to backprobe a connector while it is on the component, the order of the terminals must be mentally reversed. The wire color can help in this situation. If there is more than one wire of the same color, you may need to locate a test point from its terminal number. A useful trick is to imagine that you are probing a terminal from behind the page you are looking at. Next, mentally locate that terminal with respect to the keyway or other reference mark.

OTHER INFORMATION

Body Part Names

Refer to Figure 4 for the correct body part names.

VIN References

If schematics for more than one variation of an engine type – V6, for example – are shown, then the schematics will be labeled with VIN designations to distinguish the variations.

Abbreviations

A/C – Air Conditioning
BCM – Body Computer Module
ECM – Engine Control Module
I/P – Instrument Panel
RH – Right Hand, as seen from driver's seat
LH – Left Hand
Not Used – The connector cavity has no function.

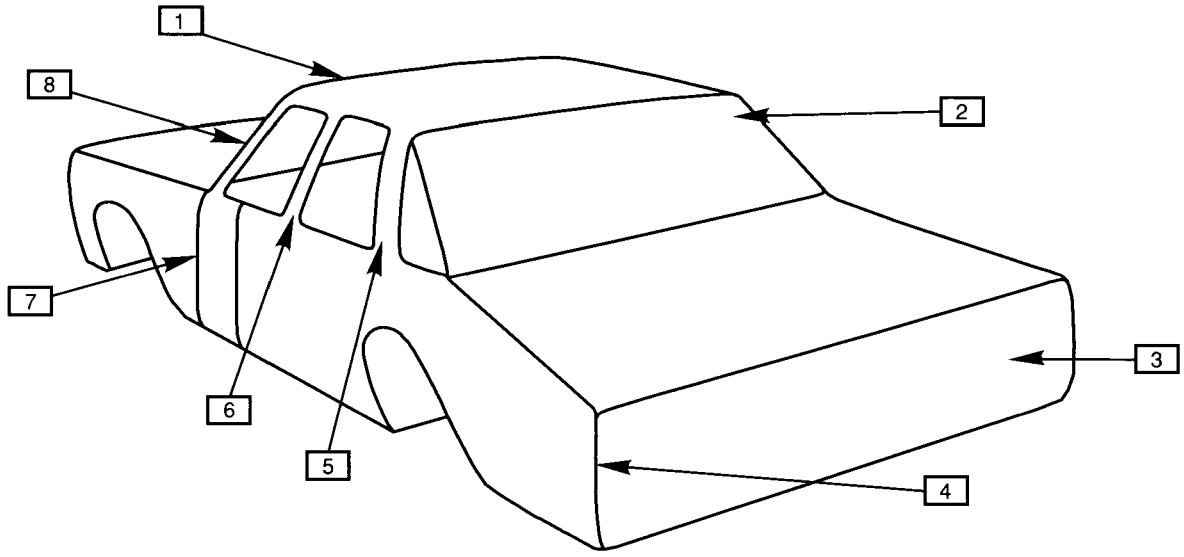

1	WINDSHIELD HEADER	5	LH "C" PILLAR
2	REAR WINDOW HEADER	6	LH "B" PILLAR
3	END PANEL	7	SHROUD AREA
4	LH QUARTER PANEL	8	LH "A" PILLAR

Figure 4 – Body Part Names

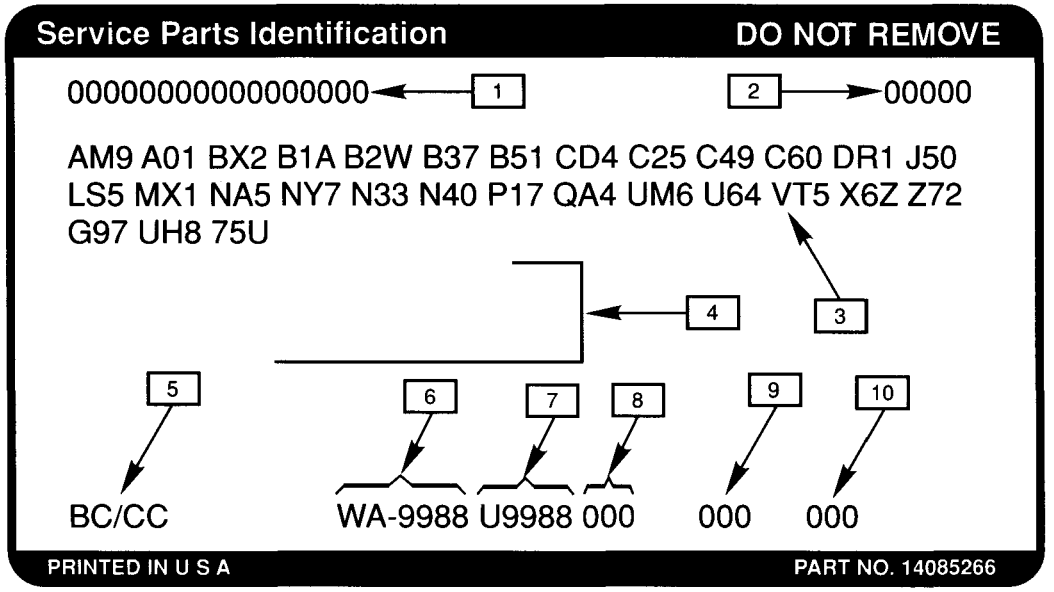

1 VIN NUMBER
2 BODY TYPE/STYLE
3 RPO CODES
4 SPECIAL ORDER PAINT COLORS
5 PAINT TECHNOLOGY
6 EXTERIOR PAINT NUMBER — LOWER
7 EXTERIOR PAINT NUMBER — UPPER
8 ACCENT COLOR
9 VINYL TOP
10 INTERIOR TRIM/DECOR LEVEL

Figure 5 – Service Parts Identification Label

SERVICE PARTS INFORMATION

This manual was written with the service technician in mind. Component names were chosen to be as descriptive and familiar as possible. Unfortunately, these names do not always coincide with those in the Service Parts Catalog. For this reason, Cell 200 provides a cross-reference list of all those components in SECTION 8A which can be serviced. Refer to Cell 200 whenever ordering parts to make sure you are ordering the correct item.

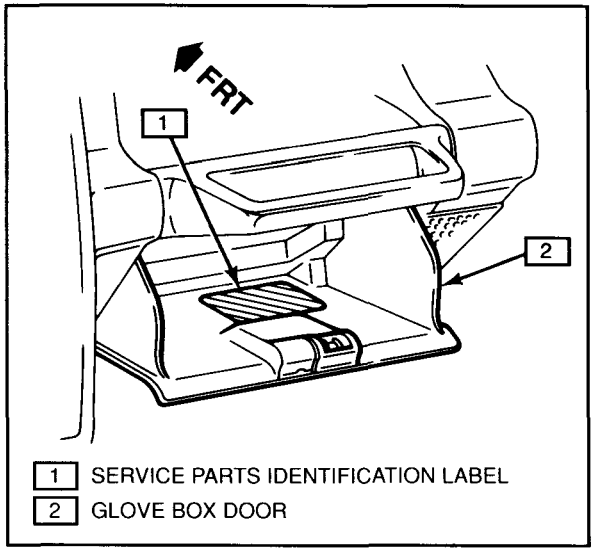

Figure 6 – Service Parts Identification Label Location

SERVICE PARTS IDENTIFICATION LABEL

The Service Parts Identification Label has been developed and placed on the vehicle to aid service and parts personnel in identifying parts and options originally installed on the vehicle. The label is located on the inside of the glove compartment door (Figure 6). Refer to Figure 5 for information on interpreting the label, and to Figure 7 for information on interpreting the "Options and Process Codes" chart in this cell.

INTRODUCTION

CODE	OPTION	HARDTOP	CONVERTIBLE	CODE	OPTION	HARDTOP	CONVERTIBLE
AM7	Folding Seat, Rear	X	X	NA5	Emission System	X	X
AM9	Split Folding Seat, Rear	X	X	NB2	California Emission System	X	X
AQ9	Front Bucket Seats, Recline	X	X	NV5	Differential Carrier Shield	X	X
AR9	Front Bucket Seats, European Style, Recline	X	X	NY7	Transfer Case Shield	X	X
AX4	Restraint System	X	X	PG2	15 x 5.5 Wheels, Steel	X	X
AO1	Tinted Window	X		P17	Spare Wheel Cover	X	X
A4G	Override Option (Canadian)	X	X	UH8	Cluster-Temp., Tach., Trip Odometer	X	X
A5J	Accounting Option (Canadian)	X	X	UL5	Delete Radio	X	X
B18	Ornamentation Interior, Deluxe	X	X	UM6	AM/FM Stereo, Auto Reverse Cassette	X	X
B2W	P205/75R15 Tires	X	X	UM7	AM/FM Stereo Radio, Clock	X	X
B2Z	Deluxe Van Package	X		UQ9	Delete Speaker System	X	X
B37	Floor Mats	X	X	U64	Four-Way Speaker System	X	X
B94	Exterior Ornamentation	X	X	U73	Radio Antenna, Fixed	X	X
CD4	Windshield Wiper System	X	X	U89	Trailer Wiring Harness	X	X
C1L	POE Processing Option	X	X	VR2	Trailer Hitch	X	X
C25	Rear Window Wiper	X		VV5	POE Air Conditioning	X	X
C42	Deluxe Heater	X	X	21U	Exterior Color, Lt. Blue Met.	X	X
C49	Electric Rear Window Defogger	X		73U	Exterior Color, Red	X	X
C60	Air Conditioning	X	X	88U	Exterior Color, Dk. Gray Met.	X	X
DR1	Outside Mirror, Right and Left	X	X	11T	White Vinyl Top		X
DS1	Sales Diplomatic Processing Option	X	X	19T	Black Vinyl Top		X
D88	Sport Stripe	X	X	131	Interior Trim, Slate Gray	X	X
FLT	Fleet Processing Option	X	X	11U	Exterior Color, White	X	X
J50	Power Brakes	X	X	Z49	Canadian Modification Package	X	X
LS5	1.6L 4 cylinder engine, TBI, OHC, Aluminum, Suzuki	X	X	ZY1	Solid Color Combination	X	X
				ZE5	Base Trim Level	X	X
MM5	5-Speed Manual Transmission	X	X	VG8	Notice-To-Buyer-Label	X	X
MX1	3-Speed Automatic Transmission	X	X				

Figure 7 – Options and Process Codes

POWER DISTRIBUTION

The Power Distribution schematic (Figure 8) shows the wiring from the BATTERY and GENERATOR to the STARTER SOLENOID, FUSE BLOCK, IGNITION SWITCH and LIGHT SWITCH. The first component after a Fusible Link is also shown.

The Power Distribution schematic refers to the Fuse Block Details schematics. By using these schematics, power distribution wiring can be followed from the BATTERY and GENERATOR to the first component after a Fusible Link. The ability to follow the power distribution wiring to the first component in each circuit is extremely helpful in locating short circuits which cause fusible links and fuses to open.

Figure 8 is a sample Power Distribution schematic. It shows how voltage is applied from the positive BATTERY terminal to the various circuits on the vehicle. For example, battery voltage is applied to FUSIBLE LINK B, the RED wire and connector C100 to Fuse 1 and Fuse 2 in the FUSE BLOCK and the LIGHT SWITCH. These fuses are said to be Hot At All Times, since battery voltage is always being applied to them.

Notice that battery voltage is also applied to the STARTER SOLENOID, to FUSIBLE LINK F, and to FUSIBLE LINK C.

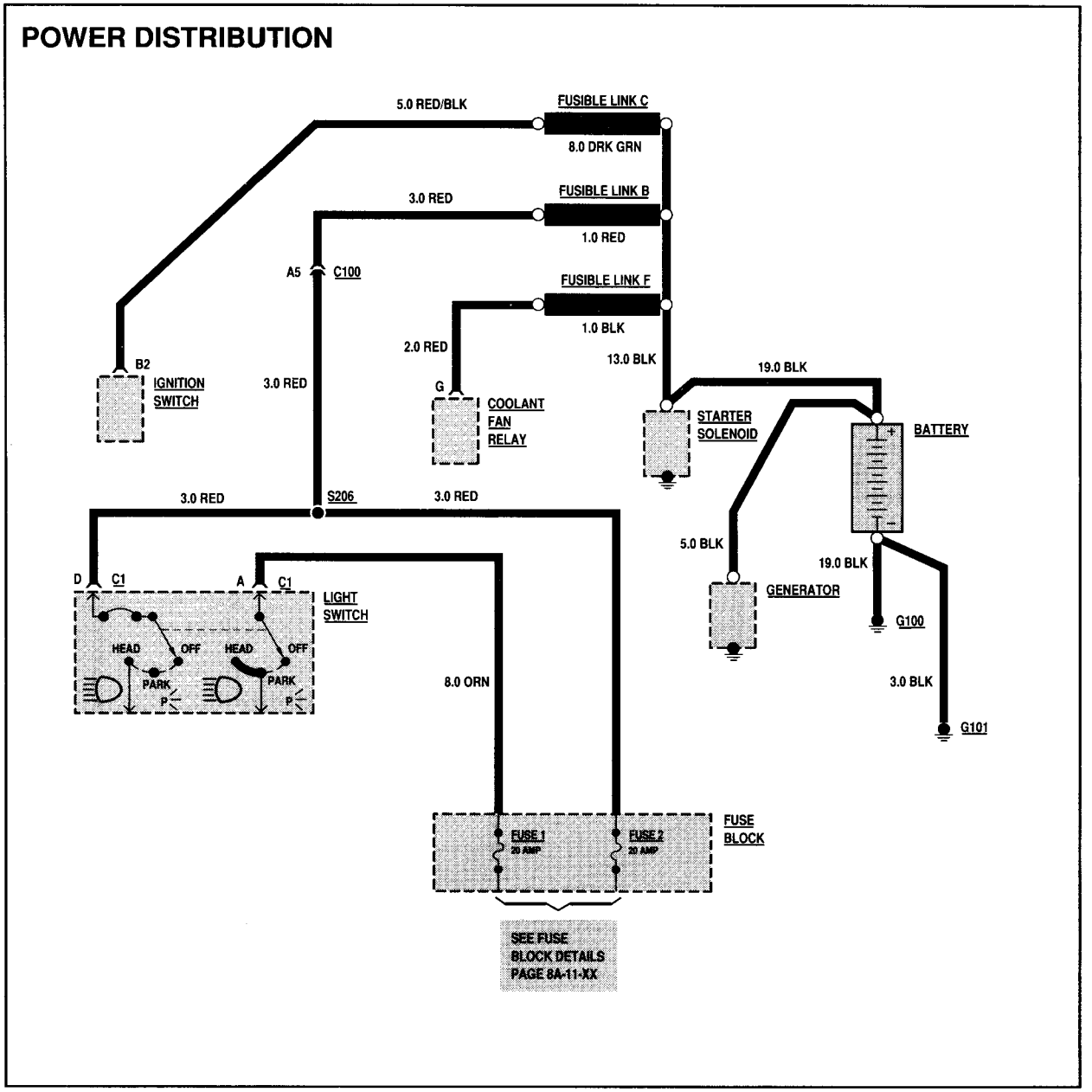

Figure 8 – Typical Power Distribution Schematic

INTRODUCTION

FUSE BLOCK DETAILS

The Fuse Block Details schematic shows all the wiring between a fuse and the components connected to the output of the fuse (Figure 9). The Fuse Block Details schematic is extremely helpful in locating a short circuit that causes a fuse to open.

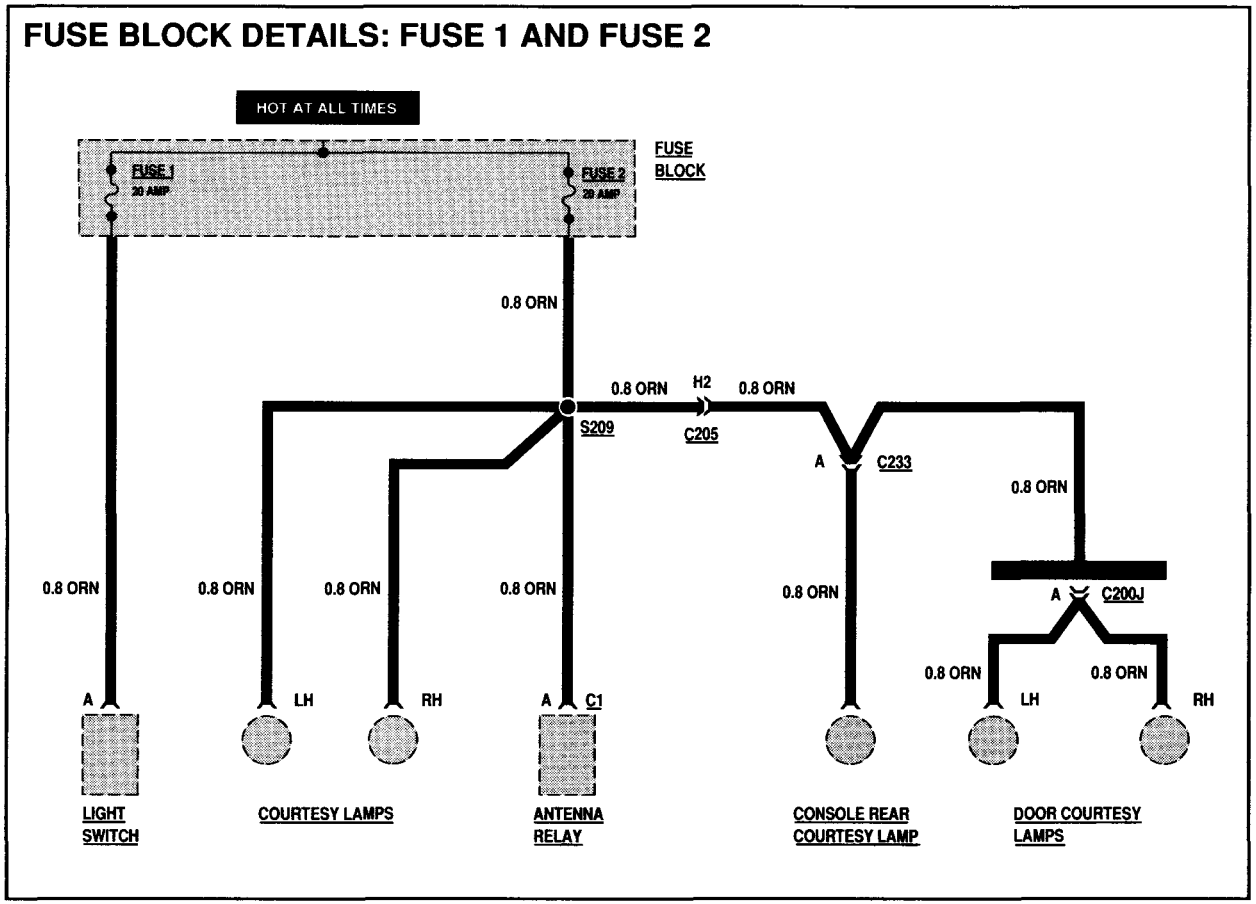

Figure 9 – Typical Fuse Block Details Schematic

INTRODUCTION

GROUND DISTRIBUTION

Figure 10 is a sample Ground Distribution schematic for the headlamps. It shows exactly which components share each ground. This information can often be a time-saver when troubleshooting ground circuits.

For example, if both HEADLAMPS and the PARK/TURN LAMP on one side are all out, you could suspect an open in their common ground wire or the ground connection itself. On the other hand, if one of the lights works, you know that the ground and the wire up to the splice are good. You have learned this just by inspecting the schematic and knowing the vehicle's symptoms. No actual work on the lighting system was needed.

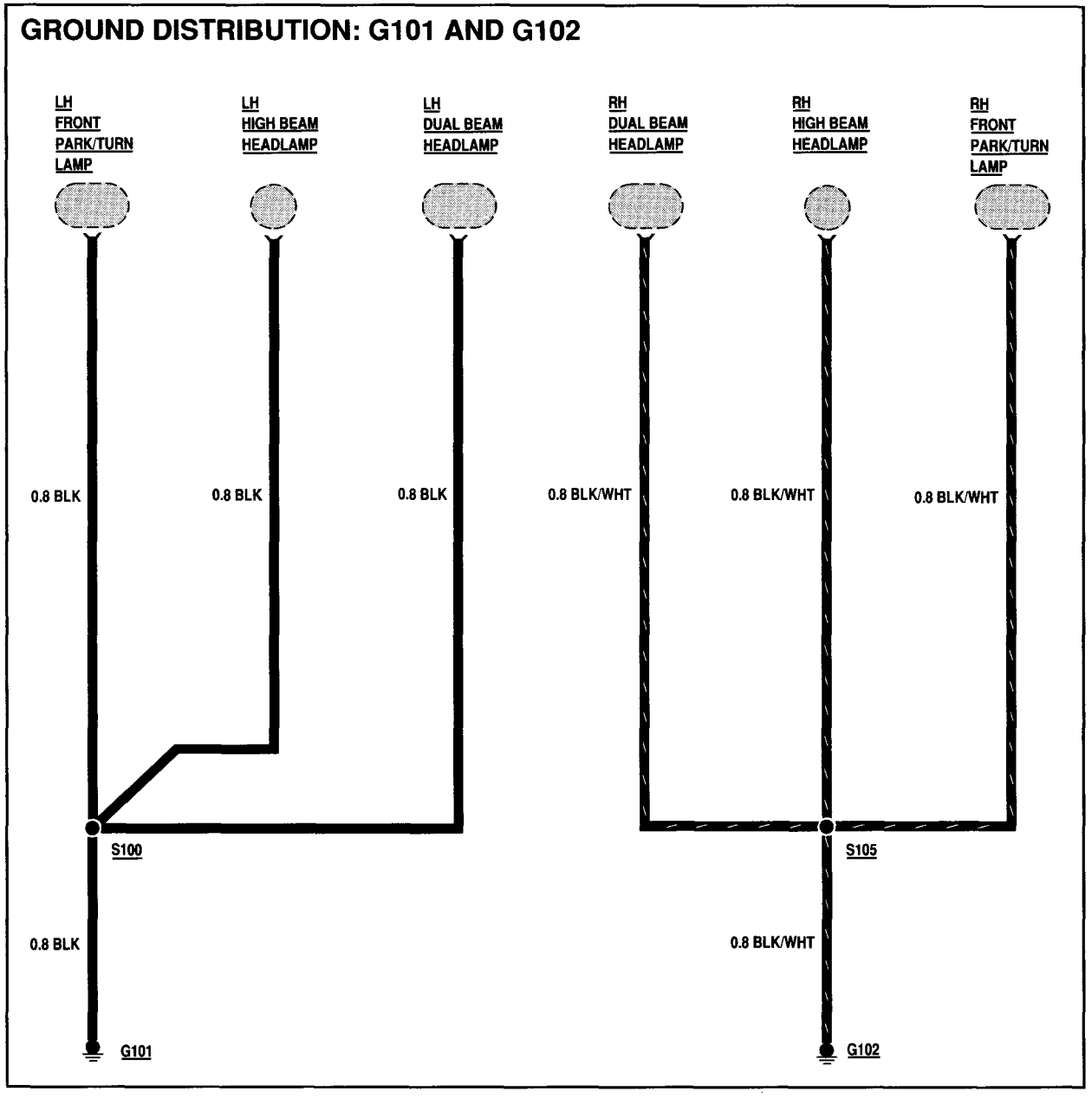

Figure 10 – Typical Ground Distribution Schematic

SYMBOLS

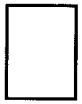

ENTIRE COMPONENT SHOWN

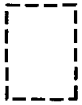

PART OF A COMPONENT SHOWN

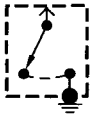

NAME OF COMPONENT

DETAILS ABOUT COMPONENT OR ITS OPERATION

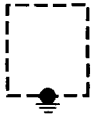

COMPONENT CASE IS DIRECTLY ATTACHED TO METAL PART OF CAR (GROUNDED)

WIRE IS ATTACHED TO METAL PART OF CAR (GROUNDED)

GROUND IS NUMBERED FOR REFERENCE ON COMPONENT LOCATION LIST

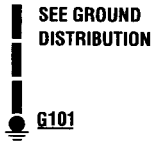

WIRE IS INDIRECTLY CONNECTED TO GROUND

WIRE MAY HAVE ONE OR MORE SPLICES BEFORE IT IS GROUNDED

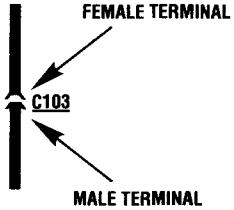

CONNECTOR REFERENCE NUMBER FOR COMPONENT LOCATION LIST

TABLE ALSO SHOWS TOTAL NUMBER OF TERMINALS POSSIBLE: C103 (6 CAVITIES)

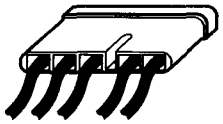

5 CAVITY CONNECTOR (5 OUT OF 5 CAVITIES ARE USED)

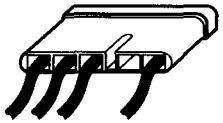

5 CAVITY CONNECTOR (4 OUT OF 5 CAVITIES ARE USED)

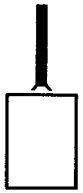

CONNECTOR ATTACHED TO COMPONENT

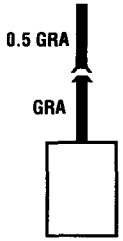

CONNECTOR ON COMPONENT LEAD (PIGTAIL)

WIRE SIZE AND INSULATION COLOR ARE BOTH SHOWN AND LABELED

SPLICES ARE SHOWN AND NUMBERED

A WAVY LINE MEANS A WIRE IS TO BE CONTINUED ON ADJACENT PAGE

WIRE INSULATION IS ONE COLOR WITH ANOTHER COLOR STRIPE (RED WITH YELLOW)

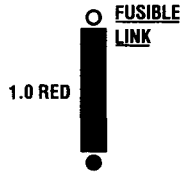

WIRE SIZE AND INSULATION COLOR ARE LABELED

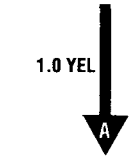

CURRENT PATH IS CONTINUED AS LABELED. THE ARROW SHOWS THE DIRECTION OF CURRENT FLOW AND IS REPEATED WHERE CURRENT PATH CONTINUES

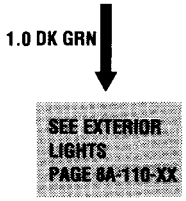

A WIRE WHICH CONNECTS TO ANOTHER CIRCUIT. THE WIRE IS SHOWN AGAIN ON THAT CIRCUIT

SYMBOLS

CIRCUIT BREAKER

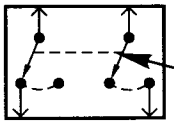

SWITCH CONTACTS THAT MOVE TOGETHER

DASHED LINE SHOWS A MECHANICAL CONNECTION BETWEEN SWITCH CONTACTS

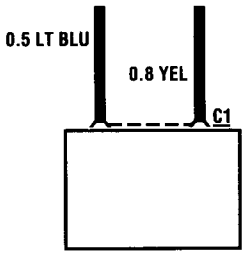

TWO TERMINALS IN THE SAME CONNECTORS

DASHED LINE SHOWS A PHYSICAL CONNECTION BETWEEN PARTS (SAME CONNECTOR)

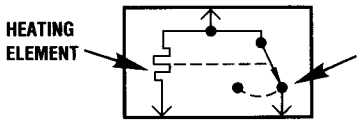

HEAT-ACTUATED CONTACT

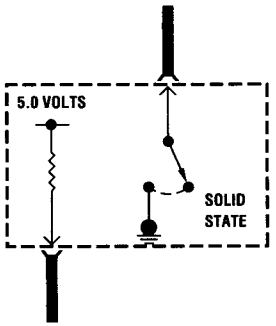

ENGINE CONTROL MODULE (ECM) SOLID STATE

"SOLID STATE" IDENTIFIES MODULE AS ELECTRONIC. SIMPLIFIED COMPONENTS WITHIN THE MODULE SHOW HOW EACH CIRCUIT IS COMPLETED. DO NOT MEASURE RESISTANCE OF CIRCUITS INSIDE SOLID-STATE MODULES

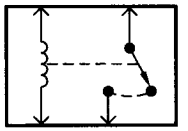

NORMALLY OPEN RELAY

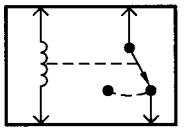

NORMALLY CLOSED RELAY

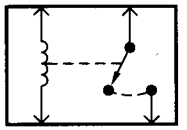

NORMALLY CLOSED RELAY WITH CURRENT PASSING THROUGH COIL (ENERGIZED POSITION) – CONTACTS FORM OPEN CIRCUIT

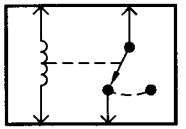

NORMALLY OPEN RELAY WITH CURRENT PASSING THROUGH COIL (ENERGIZED POSITION) – CONTACTS FORM CLOSED CIRCUIT

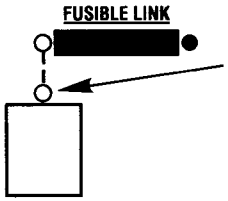

FUSIBLE LINK CONNECTS TO SCREW TERMINAL. SHOWN SEPARATED

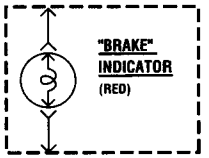

AN INDICATOR WHICH DISPLAYS THE LIGHTED WORD "BRAKE"

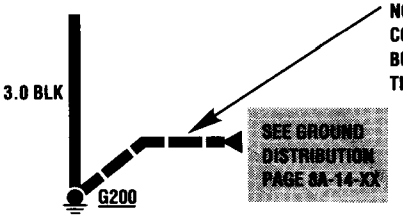

BROKEN WIRE INDICATES THAT THE CIRCUIT IS NOT SHOWN IN COMPLETE DETAIL BUT IS COMPLETE ON THE INDICATED PAGE

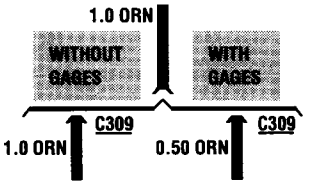

WIRE CHOICES FOR OPTIONS OR DIFFERENT MODELS ARE SHOWN AND LABELED

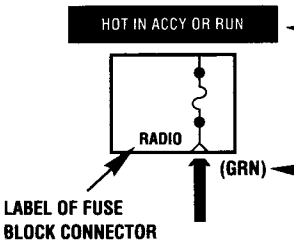

INDICATES THAT POWER IS SUPPLIED WITH IGNITION SWITCH IN ACCY AND RUN POSITION

COLOR OF FUSE BLOCK CONNECTOR

LABEL OF FUSE BLOCK CONNECTOR CAVITY

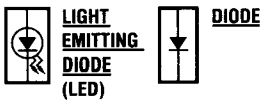

CURRENT CAN FLOW ONLY IN THE DIRECTION OF THE ARROW

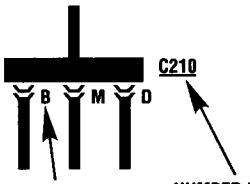

3 CONNECTORS ARE SHOWN CONNECTED TOGETHER AT A JUNCTION BLOCK. FOURTH WIRE IS SOLDERED TO COMMON CONNECTION ON BLOCK

LETTERS FOR EACH CONNECTOR

NUMBER FOR TOTAL CONNECTOR

SYMBOLS

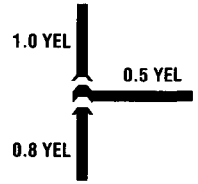

3 WIRES ARE SHOWN CONNECTED TOGETHER WITH A PIGGYBACK CONNECTOR

VACUUM JUNCTION

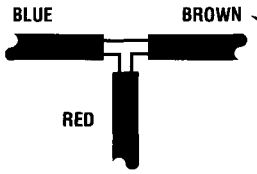

HOSE COLOR

VACUUM SOURCE

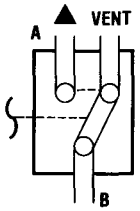

MECHANICAL VACUUM VALVE

IN THE "AT REST" POSITION SHOWN, THE VALVE DOES THE FOLLOWING:
PORT A IS SEALED
PORT B IS VENTED TO THE ATMOSPHERE

WHEN THE VALVE IS MOVED TO THE "OPERATED" POSITION VACUUM FROM PORT A IS CONNECTED TO PORT B

VACUUM SOURCE

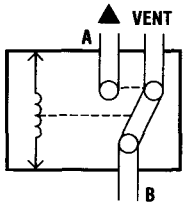

SOLENOID VACUUM VALVE

THE SOLENOID VACUUM VALVE USES THE SOLENOID TO MOVE THE VALVE

SINGLE DIAPHRAGM MOTOR

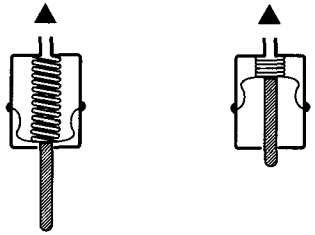

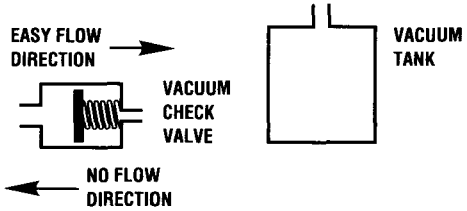

DOUBLE DIAPHRAGM MOTOR

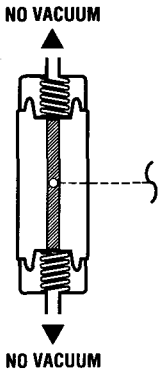

SERVO MOTOR

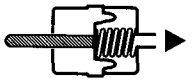

COMPONENT IS SENSITIVE TO ELECTROSTATIC DISCHARGE. FOLLOW ALL PRECAUTIONS OUTLINED IN GENERAL INFORMATION (SEC. 0A) AND IN TROUBLESHOOTING (CELL 4).

SOLID-STATE SYMBOLS

A group of special symbols is used to represent electronic circuits used in solid-state modules. These symbols are greatly simplified versions of the actual circuits. They can be very useful for troubleshooting purposes if properly used. It is important to remember that these symbols apply only to modules with all connectors in place and supply voltages on.

Outputs

The solid-state switch is used to turn on a circuit outside the module (Figure 1). When the switch closes, the voltage or ground shown will be applied to the connected circuit. Additional information about what makes the switch close is often provided. The voltage controlled by the switch may be measured just as if it were a mechanical switch.

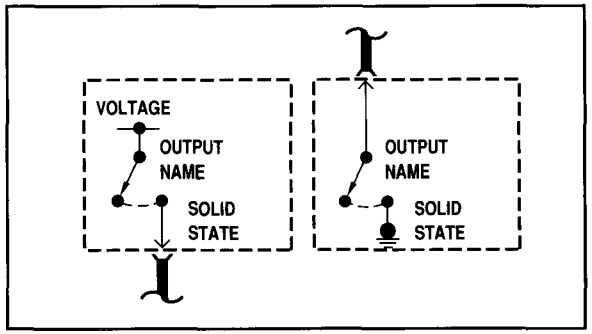

Figure 1 – Module Solid-State Switch

The following symbols are similar to the solid-state switch. The pulses represent the rate at which the switch is turned on and off (Figure 2).

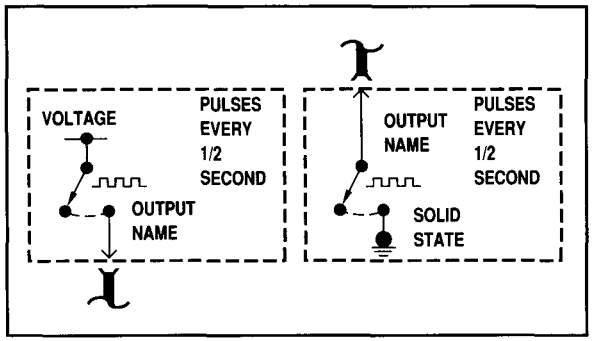

Figure 2 – Solid-State Switch Operation

The following symbols are special versions of the solid-state switch (Figure 3). They represent serial data inputs and outputs. Serial data consists of coded groups of voltage pulses transmitted at high speed. These pulses cannot usually be measured with a digital voltmeter. There are cases, however, where procedures in System Diagnosis may describe such measurements. A scan tool can often read and display this data.

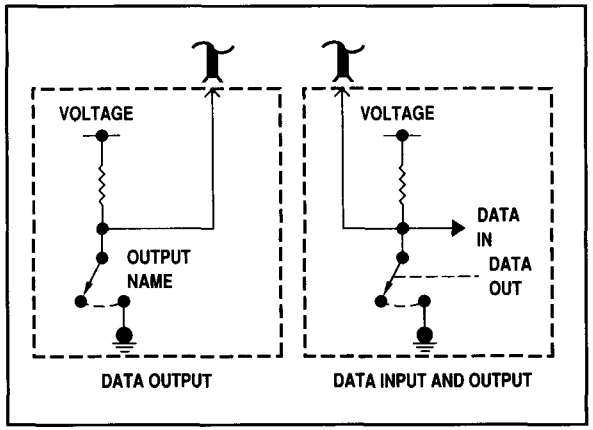

Figure 3 – Serial Data Inputs and Outputs

Inputs

The following symbols represent the equivalent circuit at the input terminals of electronic modules (Figure 4). You should not attempt to measure the resistance of these terminals unless instructed to do so by a service procedure. These inputs can be used to check wiring to electronic modules. Refer to Cell 4.

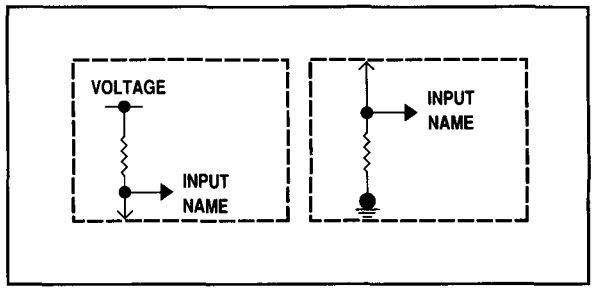

Figure 4 – Inputs

ELECTROSTATIC DISCHARGE (ESD) SENSITIVE DEVICES

All ESD sensitive components contain solid state circuits. The following information applies to all ESD sensitive devices. The ESD symbol (Figure 1) is used on schematics (Figure 2) to indicate which components are ESD sensitive.

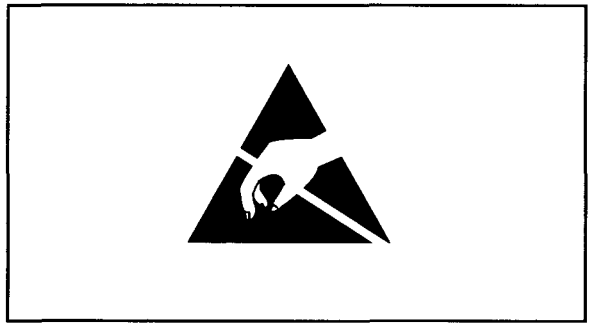

Figure 1 – Electrostatic Discharge (ESD) Sensitive Device Symbol

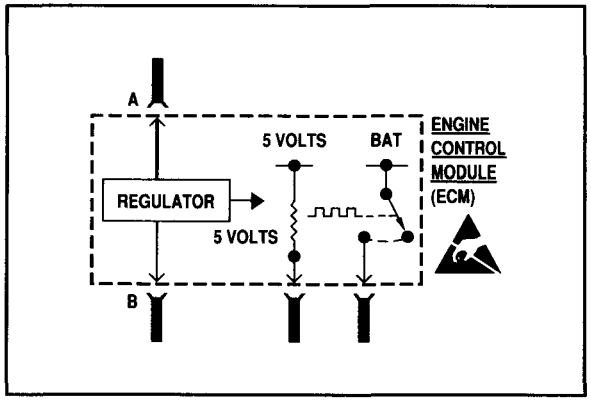

Figure 2 – Component (on Schematic) Indicated as ESD Sensitive

HANDLING PROCEDURES

When handling an electronic part that is ESD sensitive (see Figure 1), the service technician should follow these guidelines to reduce any possible electrostatic charge buildup on the service technician's body and the electronic part in the dealership:

1. Always touch a known good ground before handling the part. This should be repeated while handling the part and more frequently after sliding across the seat, sitting down from a standing position or walking a distance.
2. Avoid touching electrical terminals of the part, unless so instructed by a written diagnostic procedure.
3. Do not open package of a new part until it is time to install the part.
4. Before removing the part from its package, ground the package to a known good ground on the car.

MEASURING PROCEDURES

1. Solid state circuits in electronic devices are shown greatly simplified.
2. Due to the simplification of the electronic devices on the schematics, resistance measurements could be misleading.
3. Measuring for resistance in solid state circuits may cause electrostatic discharge. Only measure the resistance at the terminals of these devices when instructed by a written diagnostic procedure.
4. When using a voltmeter, be sure to connect the ground lead first.

JUMP STARTING IN CASE OF EMERGENCY WITH AUXILIARY (BOOSTER) BATTERY

For jump starting procedures, refer to SECTION 6D1.

TROUBLESHOOTING PROCEDURES

The following four-step troubleshooting procedure is recommended:

Step 1: Check the Problem

Perform the System Diagnosis to be sure you understand what's wrong. Don't waste time fixing part of the problem! Do not begin disassembly or testing until you have narrowed down the possible causes.

Step 2: Read the Electrical Schematic

Study the schematic. Read the Circuit Operation text if you do not understand how the circuit *should* work. Check circuits that share wiring with the problem circuit. The names of circuits that share the same fuse, ground, switch, etc., are included on each electrical schematic. Shared circuits are also shown on POWER DISTRIBUTION (CELL 10), FUSE BLOCK DETAILS (CELL 11) and GROUND DISTRIBUTION (CELL 14) pages. Try to operate the shared circuits. If the shared circuits work, then the shared wiring is OK. The cause must be within the wiring used only by the problem

circuit. If several circuits fail at the same time, chances are the power (fuse) or ground circuit is faulty.

Step 3: Find the Cause and Repair

- Narrow down the possible causes.
- Use the Troubleshooting Hints.
- Make the necessary measurements.
- Before you replace a component, check power, signal, and ground wires at the component harness connector. If these check OK, the component must be bad.

Step 4: Test the Repair

Repeat the System Diagnosis to be sure you have fixed the whole problem.

Example

A customer brings in a car and says that the high beams do not work.

Step 1: Perform the System Diagnosis on the headlamp circuit. You may discover that both low beams operate. In HI, you may notice that the High Beam Indicator comes on, but neither high-beam operates.

Step 2: Read the Headlights electrical schematic (Figure 3). This is the step that will save you time and labor. Remember, it is essential to understand how a circuit should work, before trying to figure out why it doesn't.

After you understand how the circuit should operate, read the schematic again, this time keeping in mind what you have learned by operating the circuit.

Since both low beams work, you know that the LIGHT SWITCH, the YEL wire, the LO contacts of the HEADLAMP DIMMER SWITCH, terminal 1E of C100, the TAN wires, and grounds G105 and G109 are all good.

Furthermore, since you saw that the High Beam Indicator came on when the HEADLAMP DIMMER SWITCH was moved to HI, you know that the HI contacts of the dimmer switch and the LT GRN wire between the dimmer switch and C100 are good.

At this point, you could test for voltage at the RH HEADLAMP with the dimmer switch in HI. However, it is extremely unlikely that the high beam filaments have burned out in *both* headlamps, or that *both* headlamp connections are bad. The cause must be a bad connection at C100, or a break in the LT GRN wire between C100 and the RH HEADLAMP.

You have quickly narrowed the possible causes down to one specific area, and have *done* absolutely *no* work on the car itself.

Step 3: Find the cause and repair it. Using the Component Location list and the corresponding figure, you can find C100 and the LT GRN wire, locate the exact trouble point, and make the repair.

Step 4: Check the repair by performing a system check on the Headlamps circuit. This, of course, means making sure that both high beams, both low beams, and the High Beam Indicator are all working.

Now suppose that the symptoms were different. You may have operated the Headlamps and found that the low beams were working, but neither the high beams nor the High Beam Indicator were working. Looking at the schematic, you might conclude the following:

It is unlikely that both high beam filaments and the High Beam Indicator have all burned out at once. The cause is probably the dimmer switch or its connector.

TEST EQUIPMENT

Electrical troubleshooting requires the use of common electrical test equipment.

TEST LAMP

Use a test lamp to check for voltage. A J 34142-B test lamp (Figure 4) is made up of a 12-volt light bulb with a pair of leads attached. After grounding one lead, touch the other lead to various points along the circuit where voltage should be present. When the bulb lights, there is voltage at the point being tested.

HEADLIGHTS

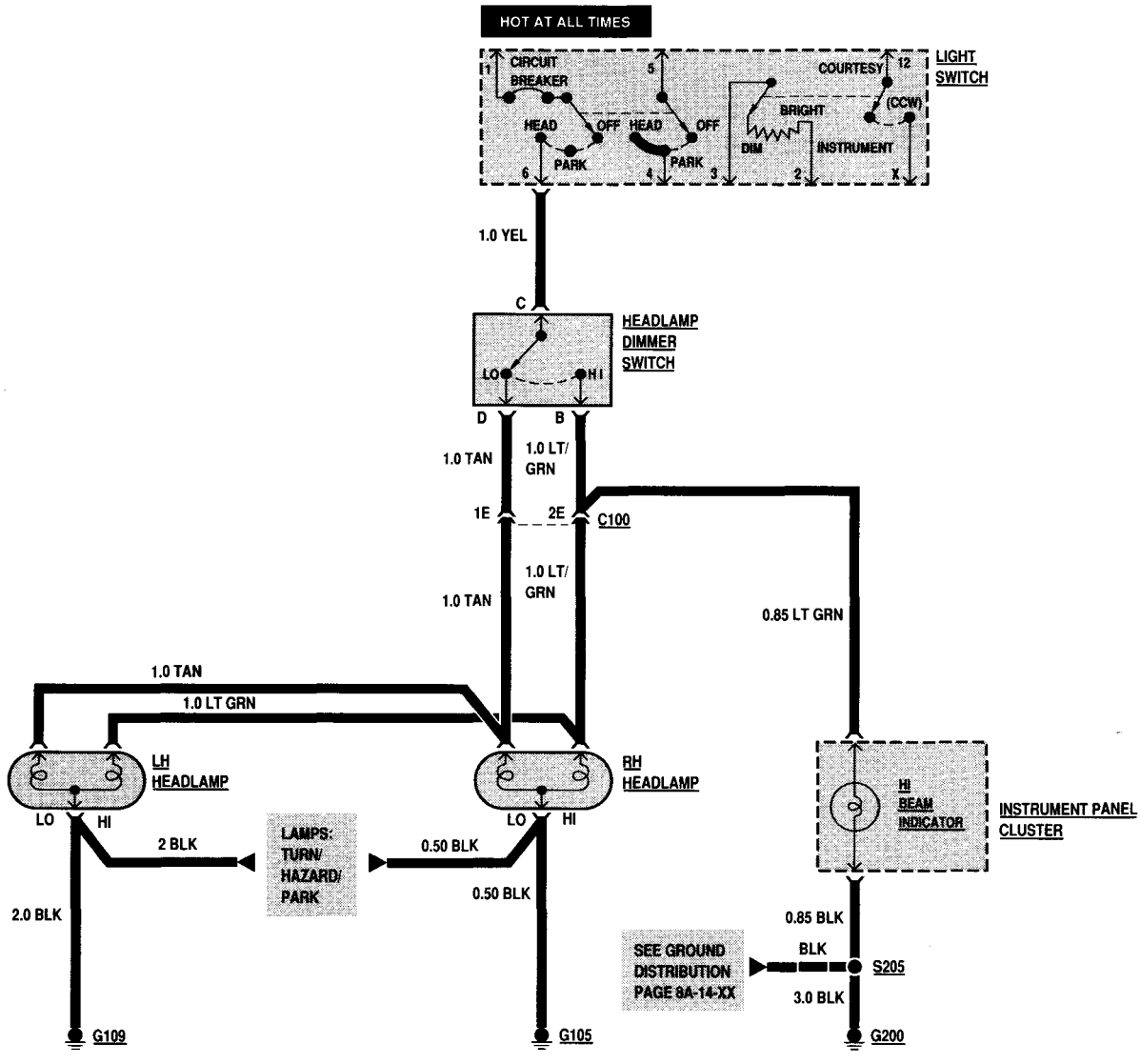

Figure 3 – Typical Headlight Schematic

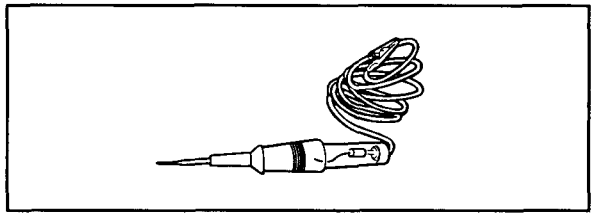

Figure 4 – J 34142-B Test Lamp

SELF-POWERED TEST LAMP

Use a J 21008-A self-powered test lamp (Figure 5) to check for continuity. This tool is made up of a light bulb, battery, and two leads. If the leads are touched together, the bulb will light.

A self-powered test lamp is used only on an unpowered circuit. First disconnect the car's battery, or remove the fuse which feeds the circuit you're working on. Select two specific points along the circuit through which there should be continuity. Connect one lead of the self-powered test lamp to each point. If there is continuity, the test lamp's circuit will be completed and the bulb will light.

Never use a self-powered test lamp on circuits that contain solid state components, since damage to these components may result.

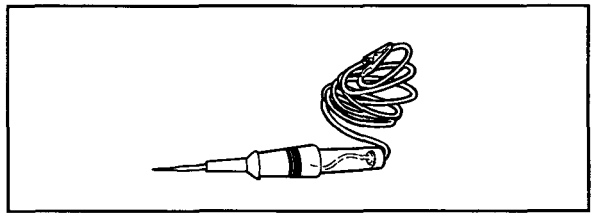

Figure 5 – J 21008-A Self-Powered Test Lamp

DIGITAL MULTIMETER

An increasing number of circuits include solid state control modules. One example is the Engine Control Module (ECM) used with electronic fuel injection. Voltages in these circuits should be tested only with a J 34029-A 10-megohm or higher impedance digital multimeter (Figure 6). Never use a test lamp on circuits that contain solid state components, since damage to these components may result. When measuring voltage with a digital multimeter, select the voltmeter scale that is closest to the expected voltage range being measured. For example, when measuring voltage in a circuit which should carry 12-volt battery voltage, select the 20-volt scale. After selecting the voltmeter scale, ground the negative lead of the multimeter and begin probing the circuit along areas where voltage should be present. The multimeter will provide a voltage reading whenever current is present at the point being tested.

A digital multimeter should also be used whenever a resistance measurement is required. Resistance readings are most often used when checking for continuity between two points within a circuit. Good continuity between the two points is indicated by very low resistance. When measuring resistance with a digital multimeter, the vehicle's battery should be disconnected. Resistance measurements are not possible with current present in the circuit being tested.

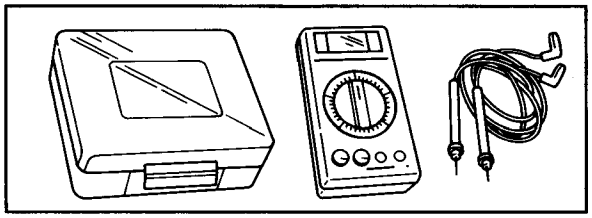

Figure 6 – J 34029-A Digital Multimeter

Diodes and solid state components in a circuit can cause a digital multimeter to provide a false resistance reading. To find out if a component is affecting a reading, reverse the multimeter leads and take a second measurement. If the readings differ, a diode or solid state component is affecting the measurement.

FUSED JUMPER WIRE

A fused jumper wire is made up of an in-line fuse holder connected to a set of test leads. Use it for bypassing open circuits. Never use a fused jumper wire across any load (motors, etc.). This direct battery short will open the fuse.

A J 36169 fused jumper wire (Figure 7) is available with small clamp connectors providing adaptation to most connectors without damage.

NOTICE: This fused jumper wire is supplied with a 20 amp fuse which may not be suitable for some circuits. Do not use a fuse with a higher rating than the fuse that protects the circuit being tested. Do not use the fused jumper wire in any instance to substitute for inputs or output at the ECM (Engine Control Module), or any microprocessor device.

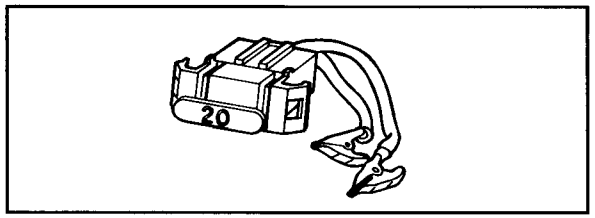

Figure 7 – J 36169 Fused Jumper Wire

UNIVERSAL SHORT CHECKER

A J 8681-A universal short checker (Figure 8) is available to locate hidden shorts to ground. The short checker creates a pulsing magnetic field in the shorted circuit and shows you the location of the short through body trim or sheet metal.

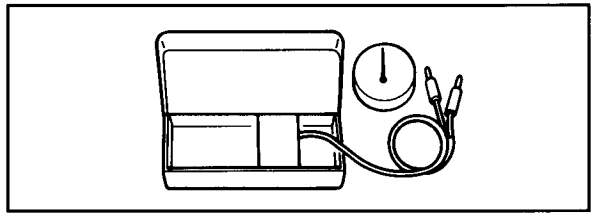

Figure 8 – J 8681-A Universal Short Checker

AUTO FUSE TESTER AND REMOVER/INSTALLER

A J 34764 auto fuse tester and remover/installer (Figure 9) that indicates an open fuse is available. To check a fuse, the tester is applied directly to the fuse in the fuse block. Two probes contact the fuse, either to the slots of a flat fuse or to the metal ends of a glass fuse. With power on, a red LED in the tester lights if the fuse is open. The handle of the tester is a tool for removing either type of fuse.

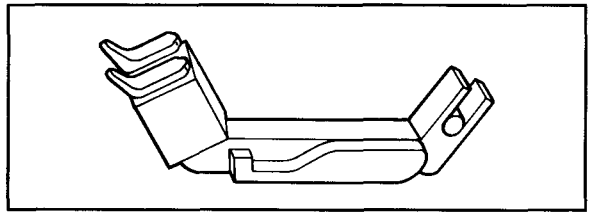

Figure 9 – J 34764 Auto Fuse Tester and Remover/Installer

AMMETER

An ammeter (Figure 10) measures the amount of current flowing in a circuit. It must always be connected in series with the circuit in order to obtain the actual current flow. Always make certain that the current and power ratings of the ammeter exceed the amount of anticipated current and power measurements in the circuit you are testing. Also, be sure to select the appropriate range on the ammeter (i.e., the one which comes closest to the anticipated current flow).

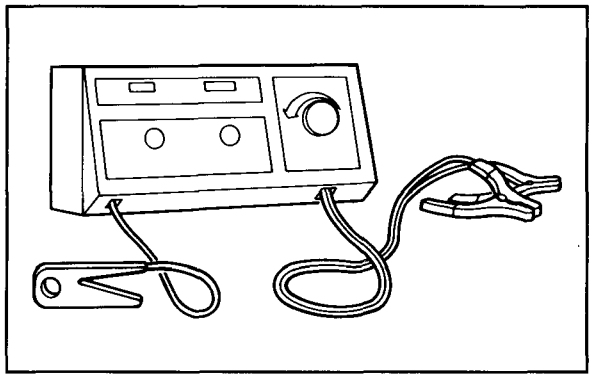

Figure 10 – Ammeter

TROUBLESHOOTING TESTS

TESTING FOR CONTINUITY

1. Disconnect the negative (-) battery cable.
2. Connect one lead of a self-powered test lamp or digital multimeter to one end of the part of the circuit you wish to test.
3. Connect the other lead to the other end of the circuit (Figure 11).
4. If the self-powered test lamp lights, there is continuity. If you are using a digital multimeter, low or no resistance means good continuity.

TESTING FOR VOLTAGE

1. Connect one lead of a test lamp to a known good ground. If you are using a multimeter, be sure it is the multimeter's negative (-) lead that you have connected to ground.

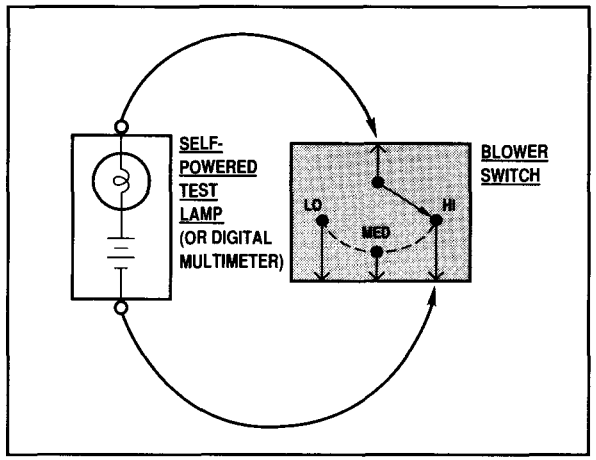

Figure 11 – Continuity Check Through a Switch

2. Connect the other lead of the test lamp or multimeter to a selected test point (connector or terminal) where you would expect battery voltage (Figure 12).

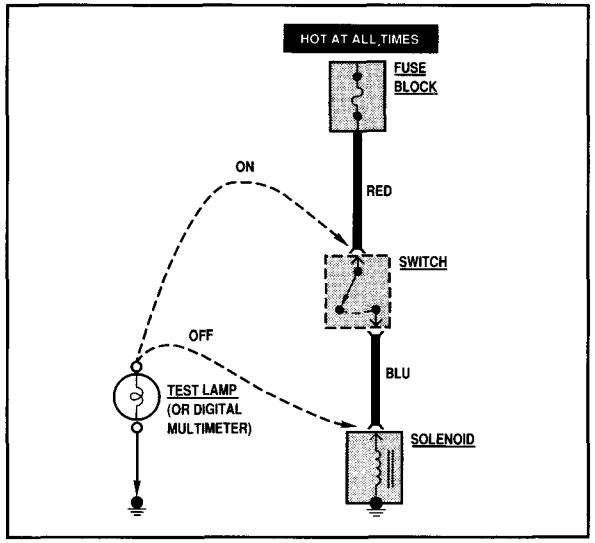

Figure 12 – Voltage Check

3. If the test lamp lights, there is voltage present. If you are using a voltmeter, note the voltage reading. It should be within one volt of measured battery voltage. A loss of more than one volt may be due to high resistance in a wire or switch, a faulty connection or a corroded ground connection.

TESTING FOR VOLTAGE DROP

This test checks for voltage being lost along a wire, or through a connection or switch.

1. Connect the positive (+) lead of a digital multimeter to the end of the wire (or to one side of the connection or switch) which is closer to the battery.
2. Connect the negative (-) lead to the other end of the wire (or the other side of the connection or switch).
3. Operate the circuit (Figure 13).
4. The digital multimeter will show the difference in voltage between the two points. A difference (or drop) of more than one volt may be due to high resistance in a wire or switch, a faulty connection or a corroded ground connection.

TESTING FOR SHORT TO GROUND

With a Digital Multimeter or Test Lamp

1. Remove the open fuse and disconnect the load.

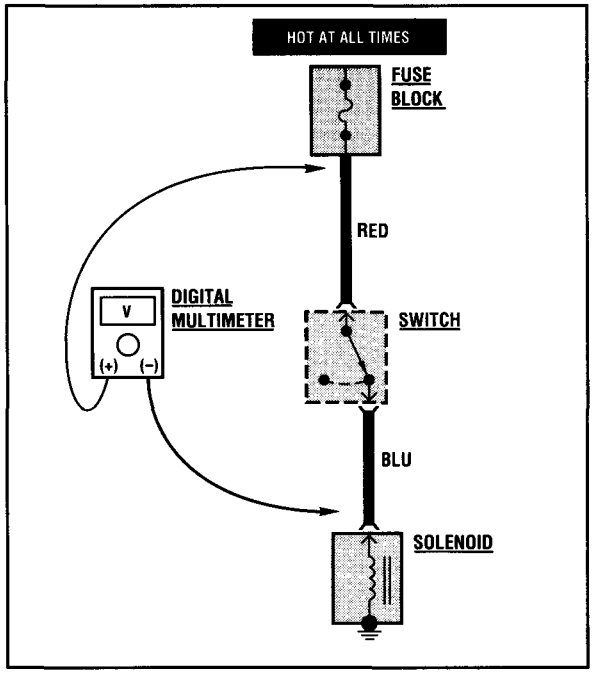

Figure 13 – Voltage Drop Test

2. Connect a digital multimeter (DC volt scale) or test lamp across the fuse terminals (be sure that the fuse is powered – Figure 14).
3. Beginning near the fuse block, wiggle the harness from side to side. Continue this at convenient points while watching the digital multimeter or test lamp.
4. When the digital multimeter registers or the test lamp lights, there is a short to ground in the wiring near that point.

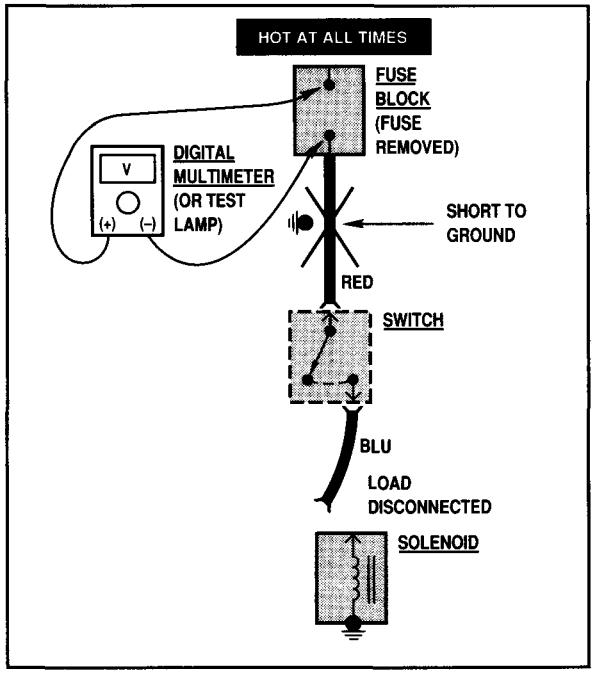

Figure 14 – Testing for Short With Digital Multimeter or Test Lamp

With a Digital Multimeter or Self-Powered Test Lamp

1. Remove the open fuse and disconnect the battery and load.
2. Connect one lead of a digital multimeter (200Ω scale) or self-powered test lamp to the fuse terminal on the load side (Figure 15).
3. Connect the other lead to a known good ground.

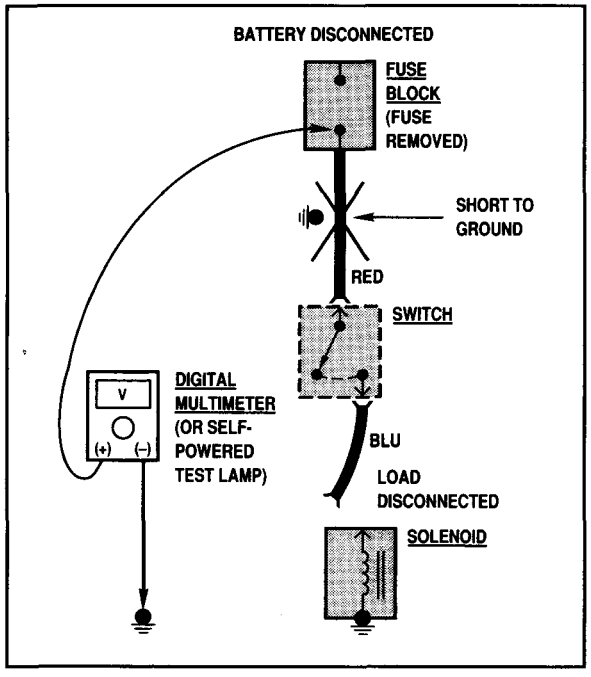

Figure 15 – Testing for Short With Digital Multimeter or Self-Powered Test Lamp

4. Beginning near the FUSE BLOCK, wiggle the harness from side to side. Continue this at convenient points while watching the digital multimeter or self-powered test lamp.
5. When the digital multimeter registers or the self-powered test lamp lights, there is a short to ground in the wiring near that point.

With a Universal Short Checker

1. Remove the open fuse, leaving the battery connected.
2. Connect the J 8681-A universal short checker across the fuse terminals.
3. Close all switches in series with the circuit you are troubleshooting.
4. Operate the short checker. The short checker will pulse current to the short. This creates a pulsing magnetic field surrounding the circuit wiring between the fuse block and the short (Figure 16).
5. Beginning at the FUSE BLOCK, slowly move the short checker's meter along the circuit wiring. The meter will show current pulses through sheet metal and body trim. As long as the meter is between the fuse block and the short, the needle will move with each current pulse. When you have moved the meter past the point of the short, the needle will stop moving. Examine the wiring in that area for the short to ground.

Fuses Powering Several Loads

1. Find the schematic in FUSE BLOCK DETAILS (CELL 11) for the fuse that has opened.
2. Open the first connector or switch leading from the fuse to each load.
3. Replace the fuse.
   - If the fuse opens, the short is in the wiring leading to the first connector or switch. Use a test lamp, digital multimeter, or universal short checker as described above.
   - If the fuse does not open, go to the next step.

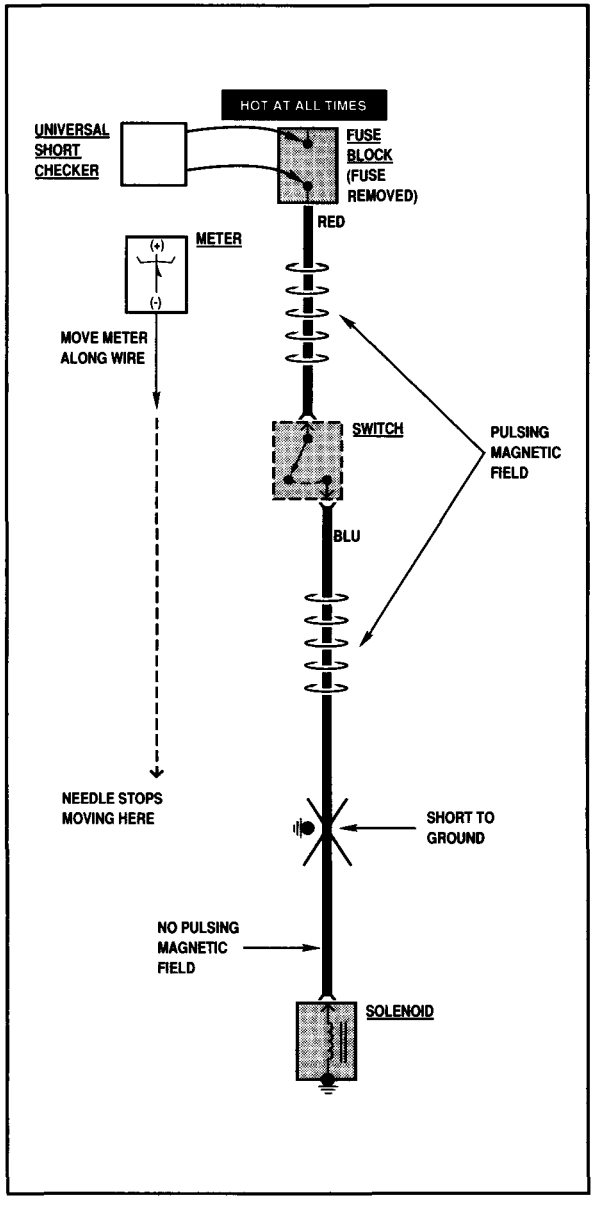

Figure 16 – Finding Short With Universal Short Checker

4. Close each connector or switch until the fuse opens to find which circuit the short is in. Connect test lamp, digital multimeter, or universal short checker at the connector to the suspect circuit (disconnected) rather than at the fuse terminals.

TESTING FOR CURRENT

To test for current an ammeter must be connected in series in the circuit. Current measurements always involve a component being removed or disconnected from the circuit. The circuit current flows through the ammeter, which displays the current in amps or milliamps.

NOTICE: Never use an ammeter set on a current scale to measure voltage. Severe damage to the ammeter, the circuit or both will result.

Two commonly used locations for taking current measurements are at a fuse and at the battery.

To measure current in a WIPER MOTOR, for instance, the ammeter should be connected across the fuse terminals, after removing the fuse (Figure 17). The ammeter can be inserted in any circuit where a single circuit can be temporarily opened to make the measurement. A second example, measuring at a fusible link is illustrated in Figure 18.

The ammeter should be connected between the screw terminal and the fusible link ring tongue terminal, after disconnecting the link.

When excessive parasitic drain is suspected, refer to "Parasitic Load Test" in SECTION 6D1.

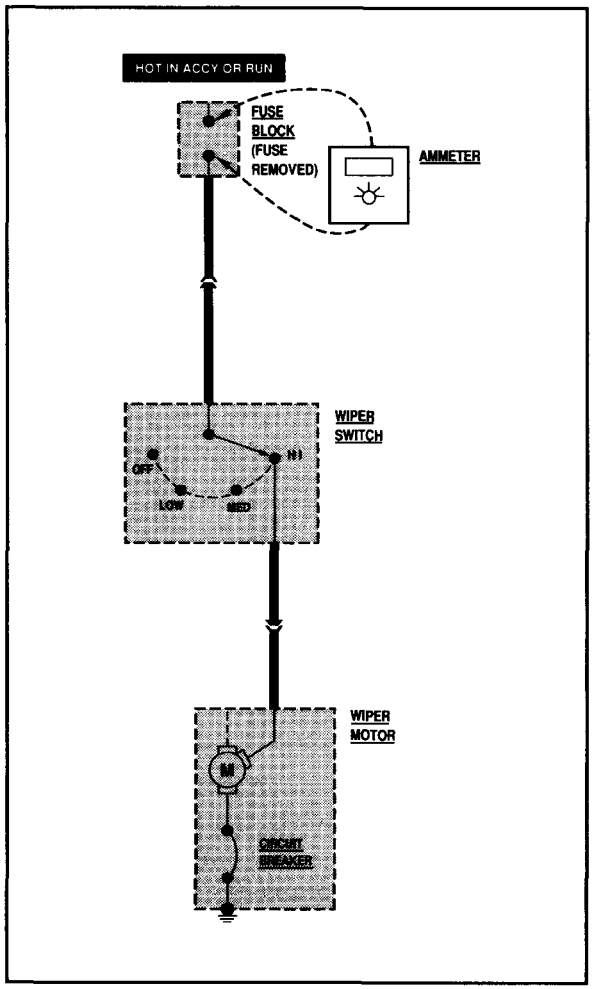

Figure 17 – Measuring Current at Fuse Block

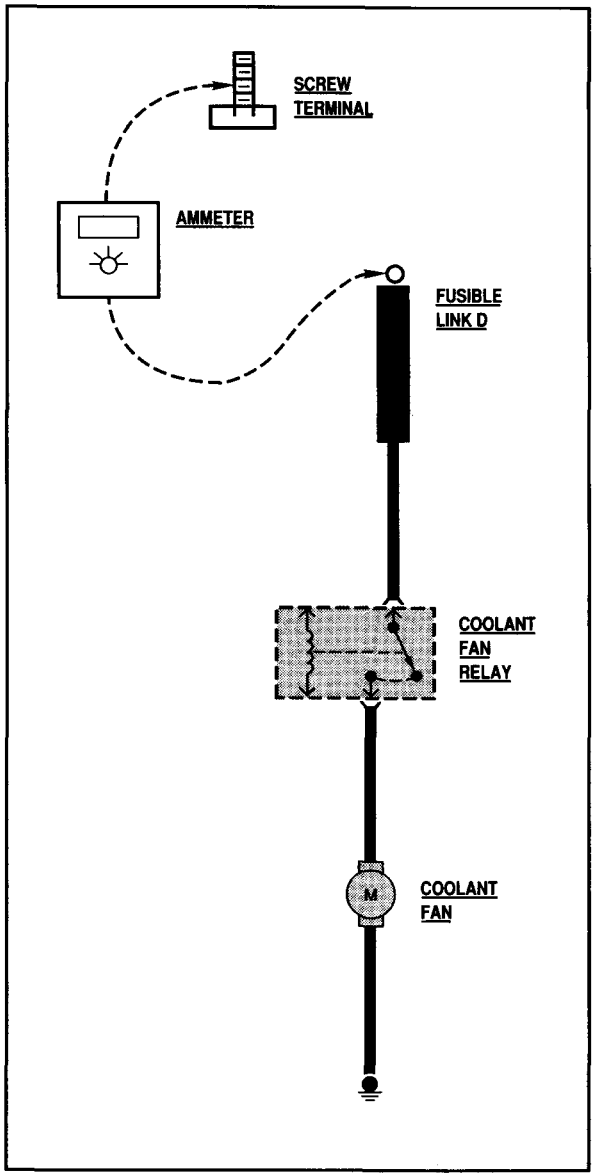

Figure 18 – Measuring Current at Fusible Link

ELECTRICAL REPAIRS

This section provides instruction in the following repairs:

- Circuit Protection
- Typical Electrical Repairs
- Splicing Copper Wire
- Splicing Copper Wire Using Crimp and Seal Splice Sleeves
- Splicing Aluminum Wire
- Splicing Twisted/Shielded Cable
- Repairing Connectors

NOTE: After any electrical repair is made, always test the circuit by operating the devices in the circuit. This confirms not only that the repair is correct, but also that the cause of the complaint was correctly identified.

CIRCUIT PROTECTION

All electrical circuits are protected against excessive loads which might occur because of shorts or overloads in the wiring system. Such protection is provided by a fuse, circuit breaker, or fusible link.

Fuses

The most common method of automotive wiring circuit protection is the fuse. Whenever there is an excessive amount of current flowing through a circuit, the fusible element will melt and create an open or incomplete circuit (Figure 1). Fuses are a "one-time" protection device and must be replaced each time the circuit is overloaded.

Auto-fuses are color coded. The standardized color identification and ratings are shown (Figure 2).

For service replacement, non-color coded fuses of the same respective current rating can be used. The current rating of each fuse is molded into its head.

To determine whether or not an auto-fuse is open, remove the suspect fuse and examine the element in the fuse for a break (Figure 1). If the element is broken, replace the fuse with one of equal current rating.

There are, however, additional specific circuits with in-line fuses. In-line fuses are located within the individual wiring harnesses. They are usually housed in spring-loaded, twist-type receptacles.

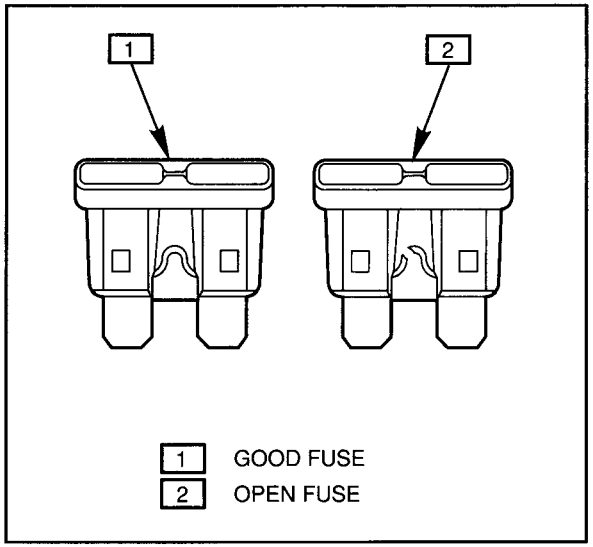

Figure 1 – Sample Fuses

CURRENT RATING (AMPERES)	COLOR
3	VIOLET
5	TAN
7.5	BROWN
10	RED
15	BLUE
20	YELLOW
25	WHITE
30	GREEN

Figure 2 – Fuse Rating and Color

Circuit Breakers

A circuit breaker is a protective device designed to open the circuit when a current load is in excess of rated breaker capacity. If there is a short or other type of overload condition in the circuit, the excessive current will open the circuit between the circuit breaker terminals. The circuit breaker will remain open until the trouble is found and corrected. The circuit breaker will close automatically when the excessive current is removed. The condition of a circuit breaker may be verified by removing it from the circuit and checking the resistance. A good circuit breaker will have less than 1.0 ohm resistance between the two terminals.

REPAIR PROCEDURES

Fusible Links

In addition to circuit breakers and fuses, some circuits use fusible links to protect the wiring. Like fuses, fusible links are "one-time" protection devices that will melt and create an open circuit (Figure 3).

Not all fusible link open circuits can be detected by observation. Always inspect that there is battery voltage past the fusible link to verify continuity.

Fusible links are used instead of a fuse in wiring circuits that are not normally fused, such as the ignition circuit. Each fusible link is four wire-gage sizes smaller than the cable it is designed to protect. Links are marked on the insulation with wire-gage size because the heavy insulation makes the link appear to be a heavier gage than it actually is. The same wire size fusible link must be used when replacing a blown fusible link.

Fusible links are available with two types of insulation: Hypalon® and Silicone/GXL (SIL/GXL). Service fusible links made with SIL/GXL may be used to replace either Hypalon® or SIL/GXL fusible links. Service fusible links made with Hypalon® may only be used to replace Hypalon® fusible links. To determine the fusible link type, nick the insulation of the blown fusible link with a knife. SIL/GXL will have a white inner core under the outer color. Hypalon® insulation is all one color. Service fusible links are available in many lengths. Choose the shortest length that is suitable. If the fusible link is to be cut from a spool, NEVER make it longer than 228 mm (9 inches).

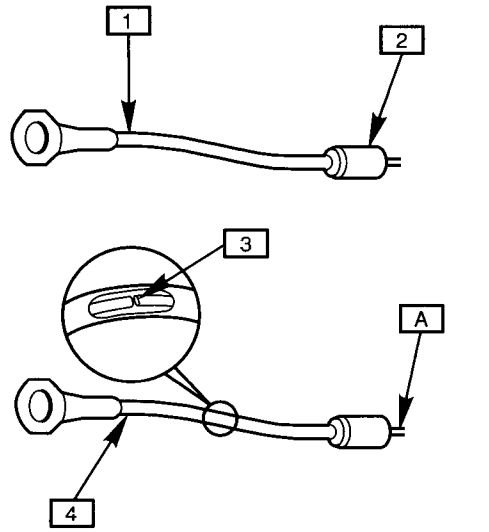

A CUT WIRE HERE
1 FUSIBLE LINK BEFORE SHORT CIRCUIT
2 CONNECTOR COVERING
3 BROKEN CIRCUIT BENEATH INSULATION
4 FUSIBLE LINK AFTER SHORT CIRCUIT

Figure 3 – Good and Damaged Fusible Links

CAUTION: Fusible links cut longer than 228 mm (9 inches) will not provide sufficient overload protection.

To replace a damaged fusible link, cut it off beyond the splice. Replace with a repair link (Figure 4). When connecting the repair link, strip wire and use staking-type pliers to crimp the splice securely in two places. For more details on splicing procedures, refer to the "Splicing Copper Wire" procedure later in this cell.

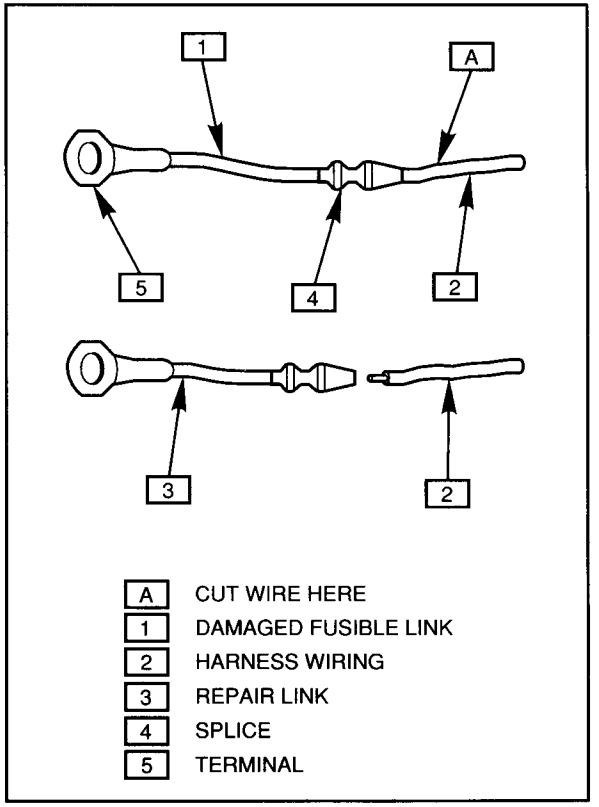

A CUT WIRE HERE
1 DAMAGED FUSIBLE LINK
2 HARNESS WIRING
3 REPAIR LINK
4 SPLICE
5 TERMINAL

Figure 4 – Single Wire Feed Fusible Link

To replace a damaged fusible link which feeds two harness wires, cut them both off beyond the splice. Use two repair links, one spliced to each harness wire (Figure 5).

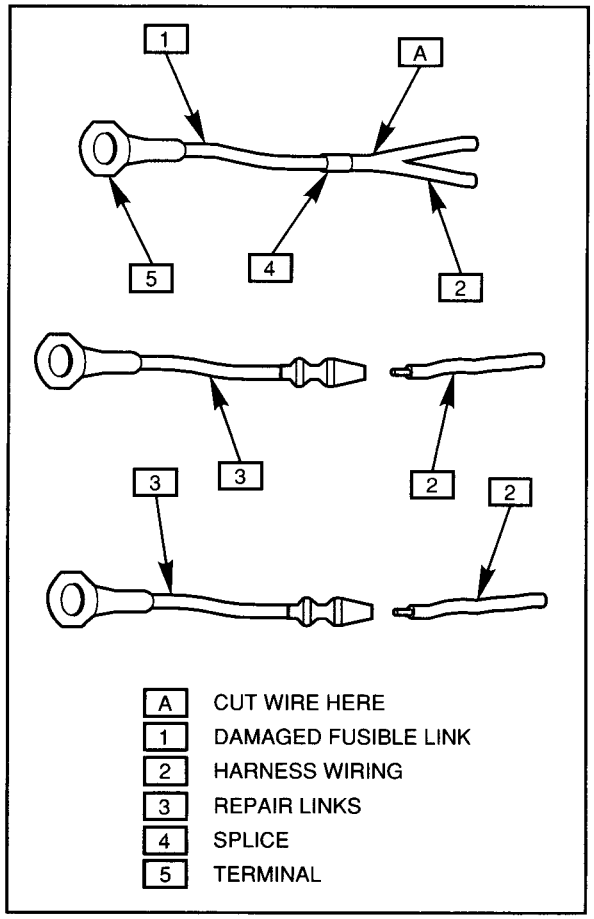

Figure 5 – Double Wire Feed Fusible Link

TYPICAL ELECTRICAL REPAIRS

An open circuit is an incomplete circuit. Power cannot reach the load or reach ground. If a circuit is open, active components do not energize. A short circuit is an unwanted connection between one part of the circuit and either ground or another part of the circuit. A short circuit causes a fuse to blow or a circuit breaker to open.

Short Circuits Caused by Damaged Wire Insulation

1. Locate the damaged wire.
2. Find and correct the cause of the wire insulation damage.
3. For minor damage, tape over the wire. If damage is more extensive, replace the faulty segment of the wire. Refer to the "Splicing Copper Wire," "Splicing Aluminum Wire," or "Splicing Twisted/Shielded Cable" procedure later in this cell.

SPLICING COPPER WIRE

Step 1: Open the Harness

If the harness is taped, remove the tape. To avoid wire insulation damage, use a sewing "seam ripper" to cut open the harness (available from sewing supply stores).

If the harness has a black plastic conduit, simply pull out the desired wire. Note that aluminum wire is enclosed in brown conduit. Refer to the "Splicing Aluminum Wire" procedure later in this cell.

Step 2: Cut the Wire

Begin by cutting as little wire off the harness as possible. You may need the extra length of wire later if you decide to cut more wire off to change the location of a splice. You may have to adjust splice locations to make certain that each splice is at least 40 mm (1.5-inch) away from other splices, harness branches, or connectors.

Step 3: Strip the Insulation

When replacing a wire, use a wire of the same size as the original wire or larger. The schematics list wire size in metric units. The following table shows the commercial (AWG) wire sizes that can be used to replace each metric wire size (Figure 6). Each AWG size is either equal to or larger than the equivalent metric size.

METRIC WIRE SIZES	AWG SIZES
.22	24
.35	22
.5	20
.8	18
1.0	16
2.0	14
3.0	12
5.0	10
8.0	8
13.0	6
19.0	4
32.0	2

Figure 6 – Wire Size Conversion Table

REPAIR PROCEDURES

To find the correct wire size, either find the wire on the schematic page and convert the metric size to the AWG size or use an AWG wire gage.

If you aren't sure of the wire size, start with the largest opening in your wire stripper and work down until you get a clean strip of the insulation. Be careful to avoid nicking or cutting any of the wires.

Check the stripped wire for nicks or cut strands. If the wire is damaged, repeat the procedure on a new section of wire. The two stripped wire ends should be equal in length.

Step 4: Crimp the Wires

Select the proper clip to secure the splice. To determine the proper clip size for the wire being spliced, follow the directions included with your clips. Select the correct anvil on the crimper. (On most crimpers, your choice is limited to either a small or large anvil.) Overlap the two stripped wire ends and hold them between your thumb and forefinger (Figure 7). Then, center the splice clip under the stripped wires and hold it in place.

- Open the crimping tool to its full width and rest one handle on a firm flat surface.
- Center the back of the splice clip on the proper anvil and close the crimping tool to the point where the former touches the wings of the clip.

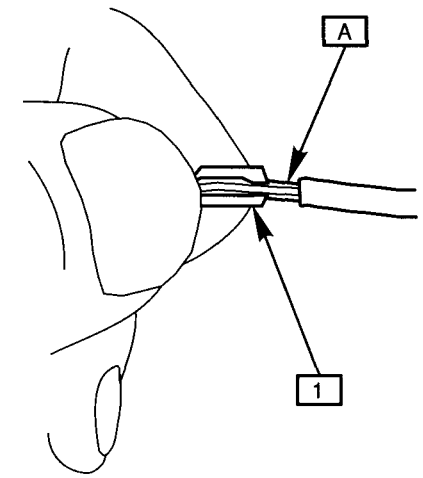

A OVERLAP BARE WIRES
1 SPLICE CLIP

Figure 7 – Centering the Splice Clip

- Make sure that the clip and wires are still in the correct position. Then, apply steady pressure until the crimping tool closes (Figure 8).

Before crimping the ends of the clip, be sure that:

- The wires extend beyond the clip in each direction.
- No strands of wire are cut loose.
- No insulation is caught under the clip.

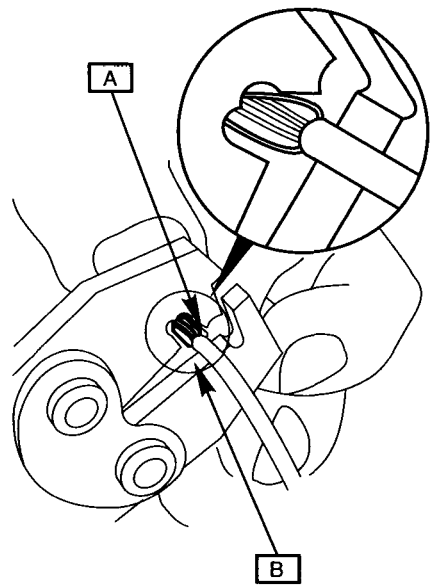

A WINGS OF CLIP ON FORMER
B BACK OF CLIP ON ANVIL

Figure 8 – Crimping the Splice Clip

Crimp the splice again, once on each end. Do not let the crimping tool extend beyond the edge of the clip or you may damage or nick the wires (Figure 9).

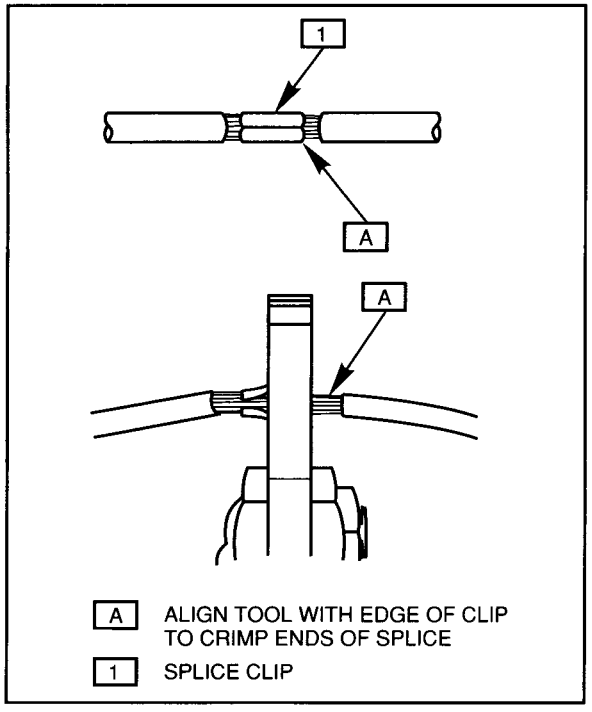

Figure 9 – Completing the Crimp

Step 5: Solder

Apply 60/40 rosin core solder to the opening in the back of the clip (Figure 10). Follow the manufacturer's instructions for the solder equipment you are using.

Step 6: Tape the Splice

Center and roll the splicing tape. The tape should cover the entire splice. Roll on enough tape to duplicate the thickness of the insulation on the existing wires. Do not flag the tape. Flagged tape may not provide enough insulation, and the flagged ends will

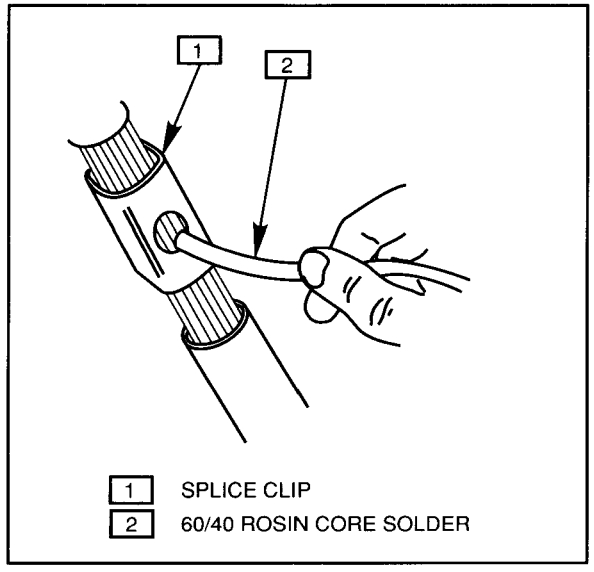

Figure 10 – Applying the Solder

tangle with the other wires in the harness (Figure 11).

If the wire does not belong in a conduit or other harness covering, tape the wire again. Use a winding motion to cover the first piece of tape (Figure 12).

SPLICING COPPER WIRE USING CRIMP AND SEAL SPLICE SLEEVES

Crimp and Seal splice sleeves may be used on all types of insulation except tefzel and coaxial to form a one-to-one splice. They are to be used where weather resistant seals are required. Crimp and Seal splice sleeves are included in the J 38125 Terminal Repair Kit.

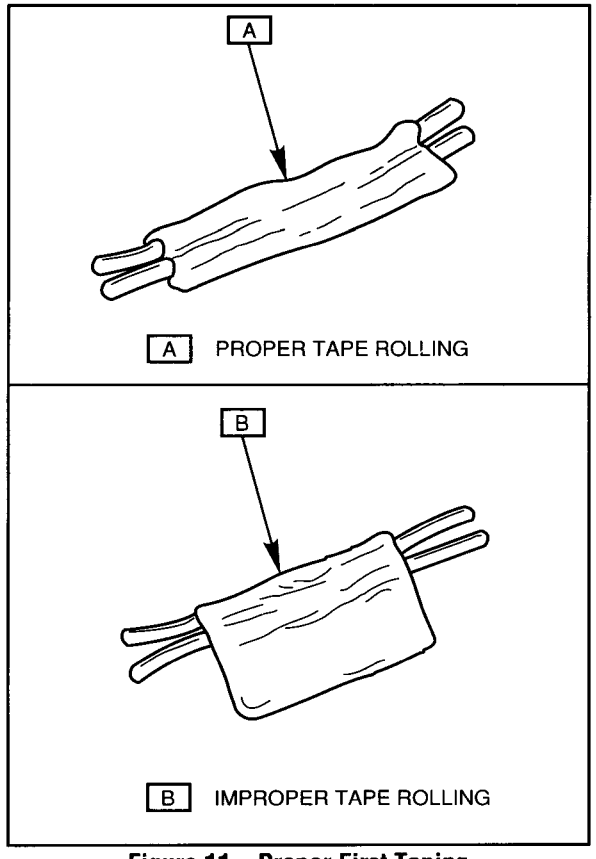

Figure 11 – Proper First Taping

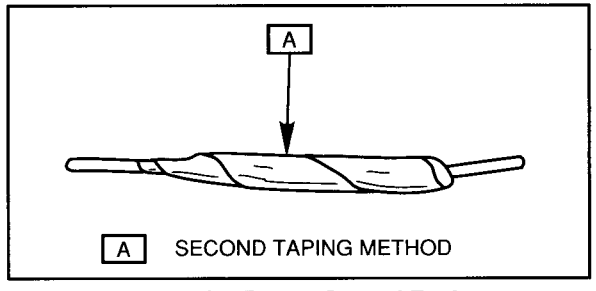

Figure 12 – Proper Second Taping

Step 1: Open the Harness

If the harness is taped, remove the tape. To avoid wire insulation damage, use a sewing "seam ripper" to cut open the harness (available from sewing supply stores). The Crimp and Seal splice sleeves may be used on all types of insulation except tefzel and coaxial and may only be used to form a one-to-one splice.

Step 2: Cut the Wire

Begin by cutting as little wire off the harness as possible. You may need the extra length of wire later if you decide to cut more wire to change the location of a splice. You may have to adjust splice locations to make certain that each splice is at least 40 mm (1.5-inch) away from other splices, harness branches, or connectors. This will help prevent moisture from bridging adjacent splices and causing damage.

Step 3: Strip the Insulation

If it is necessary to add a length of wire to the existing harness, be certain to use the same size as the original wire (Figure 6).

To find the correct wire size, either find the wire on the schematic and convert the metric size to the equivalent AWG size or use an AWG wire gage. If unsure about the wire size, begin with the largest opening in your wire stripper and work down until you get a clean strip of the insulation. Strip approximately 7.5 mm (0.31-inch) of insulation from each wire to be spliced. Be careful to avoid nicking or cutting any of the wires. Check the stripped wire for nicks or cut strands. If the wire is damaged, repeat this procedure after removing the damaged section.

Step 4: Select and Position the Splice Sleeve

Select the proper splice sleeve according to wire size. The splice sleeves and tool nests are color coded.

Color splice sleeve	Crimp tool nest color	Wire gage AWG (metric)
Salmon (yellowish-pink)	Red	20, 18/ (0.5, 0.8)
Blue	Blue	16, 14/ (1.0, 2.0)
Yellow	Yellow	12, 10/ (3.0, 5.0)

Figure 13 – Crimp and Seal Splice Sleeve Chart

Using the J 38125-8 splice crimp tool (Figure 14), position the splice sleeve in the proper color nest of the hand crimp tool. Place the splice sleeve in the nest so that the crimp falls midway between the end of the barrel and the stop.

The sleeve has a stop in the middle of the barrel to prevent the wire from going further (Figure 15). Close the hand crimper handles slightly to hold the splice sleeve firmly in the proper nest.

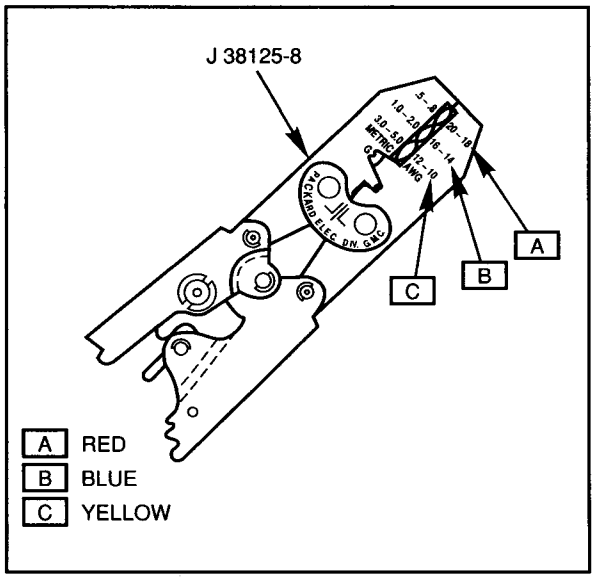

Figure 14 – Hand Crimp Tool

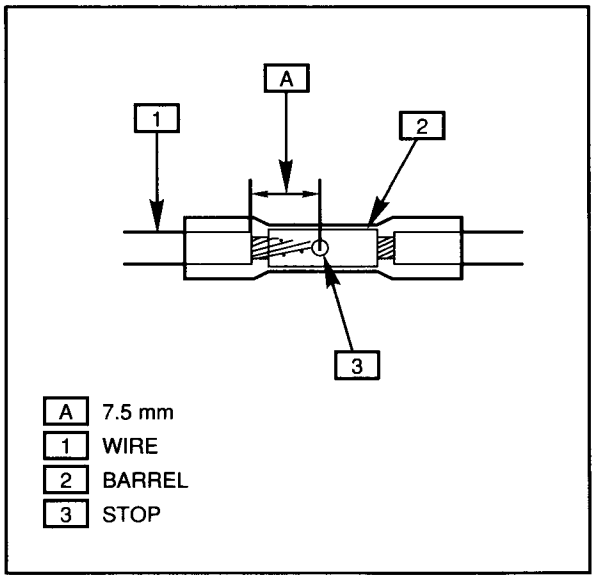

Figure 15 – Splice Before Crimping

Step 5: Insert Wires into Splice Sleeve and Crimp

Insert the wire into the splice sleeve until it hits the barrel stop and close the handles of the J 38125-8 crimper tightly until the crimper handles open when released (Figures 15 and 16). The crimper handles will not open until the proper amount of pressure is applied to the splice sleeve. Repeat steps 4 and 5 for opposite end of the splice.

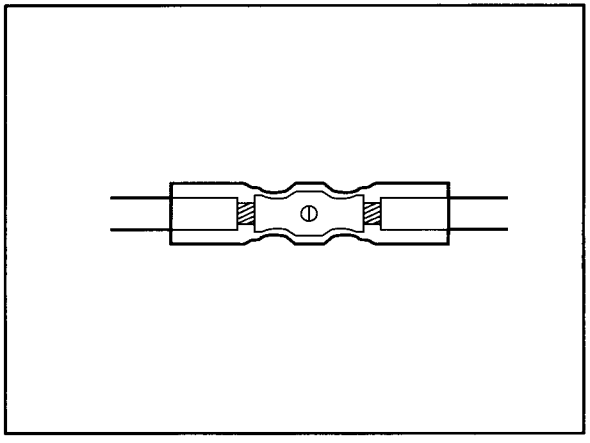

Figure 16 – Splice After Crimping

Step 6: Shrink the Insulation around the Splice

Using a heat torch, apply heat where the barrel is crimped.

Gradually move the torch to the open end of the tubing, shrinking the tubing completely as the heat is moved along the insulation. A small amount of sealant will come out of the end of the tubing when sufficient shrinking is achieved (Figure 17).

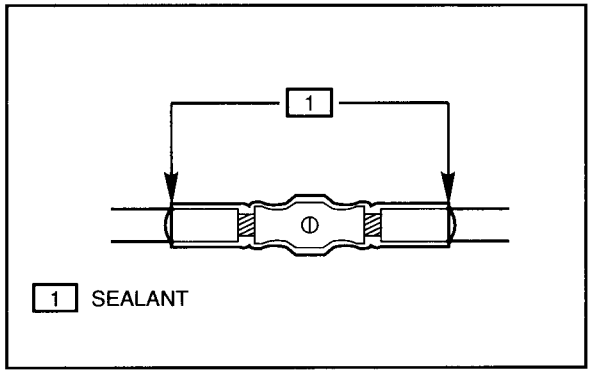

Figure 17 – Splice After Heating

SPLICING ALUMINUM WIRE

Some GM vehicles have a front body wiring harness made of 2.0 metric and 1.0 metric (14 and 16 gage) insulated solid cable aluminum wires. These wires are enclosed in a brown solid plastic conduit from behind the instrument panel to the rear of the car.

A special repair kit (1684873-GR.2.530-KIT-ALUM-WIRE TERMINAL REPAIR) is available to help make repairs on aluminum wires. This kit contains materials and instructions that can be used either to splice wire or crimp on new terminals. The kit includes the following parts:

- Small cylindrical metal splice clips.
- A plastic tube of petroleum jelly.
- Ten 2.0 metric (14 gage) DK GRN leads: 150 mm (6 inches) long with terminals.
- Ten 1.0 metric (16 gage) BRN leads: 150 mm (6 inches) long with terminals.

Use of the special materials in this kit will help prevent galvanic corrosion. Galvanic corrosion causes increased resistance between the terminal and wire, or the splice clip and wire, or both. Increased resistance would affect the operation of the electrical components in the repaired circuit.

Step 1: Open the Harness

Because the harness has a solid plastic conduit, simply cut the conduit open with diagonal cutters and pull out the desired wire. Be careful not to damage any of the wires when cutting open the conduit.

Step 2: Cut the Wire

Begin by cutting as little wire off the harness as possible. You may need the extra length of wire later if you decide to cut more wire off to change the location of a splice. You may have to adjust splice locations to make certain that each splice is at least 40 mm (1.5-inch) away from the other splices, harness branches, or connectors.

Step 3: Strip the Insulation

When replacing a wire or lead, use a wire of the same size as the original wire, or larger. Look up the metric size on the schematic and select the proper-sized leads from the special repair kit. Remember that the wires in this harness can only be one of two sizes-2.0 metric or 1.0 metric (14 or 16 gage).

Use wire strippers of the proper gage to strip approximately 6 mm (0.25-inch) of insulation from each wire end.

When stripping the outer jacket from the aluminum wire core, be careful not to nick or damage the core. A damaged core will weaken the assembly at this point.

Step 4: Coating the Splice/Terminal

To prevent corrosion, apply a generous coating of petroleum jelly to the splice area. If you are replacing a lead, also thoroughly coat the terminal crimp area and aluminum core with petroleum jelly. Both areas are shown and identified with the letter "A" (Figure 18).

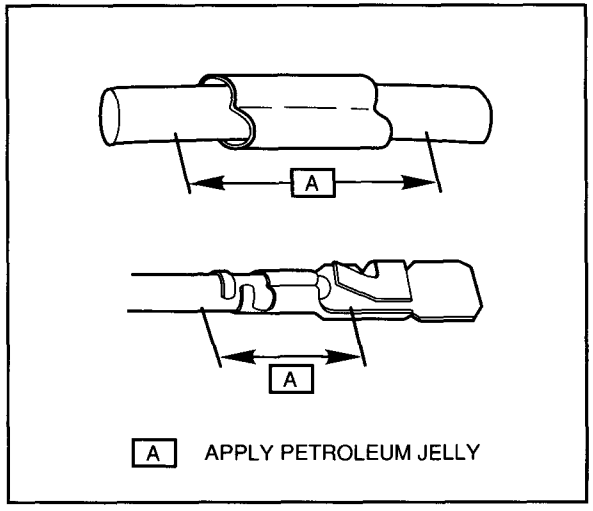

Figure 18 – Where to Apply Petroleum Jelly

Step 5: Crimp the Wires

- Select the proper-sized splice clip (follow the instructions included in the special repair kit).
- Place one wire end in each end of the splice clip.
- Crimp the clip firmly to the wire using 10-inch clip joint pliers. Do not solder the splice (Figure 19).
- Repeat this procedure for the second wire or lead in the splice clip.

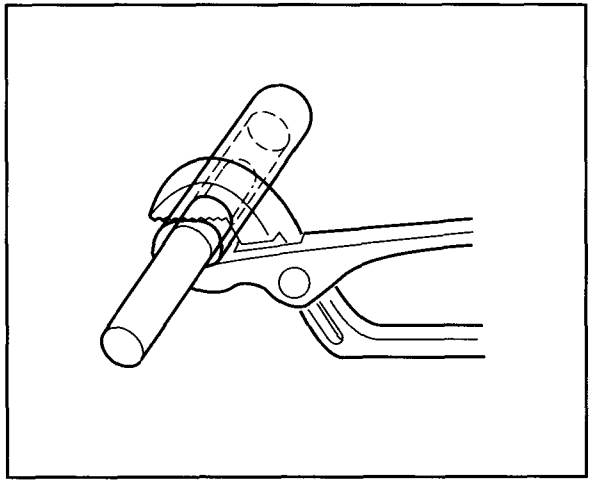

Figure 19 – Crimping the First Half of the Splice Clip (Aluminum Wire)

Step 6: Tape Splice/Insert Terminal

Tape over both the splice clip and the petroleum jelly to seal out moisture and insulate the splice (Figure 20). If you have replaced a lead, do not tape over the terminal crimp area but insert the lead into the connector body.

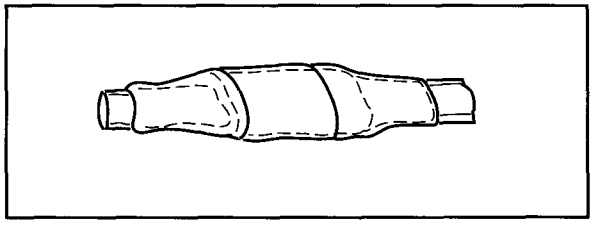

Figure 20 – Covering the Splice Clip and the Petroleum Jelly to Seal and Insulate

SPLICING TWISTED/SHIELDED CABLE

Twisted/shielded cable is sometimes used to protect wiring from electrical noise (stray signals). For example, two-conductor cable of this construction is used between the ECM and the distributor. A breakdown of twisted/shielded cable construction is shown (Figure 21).

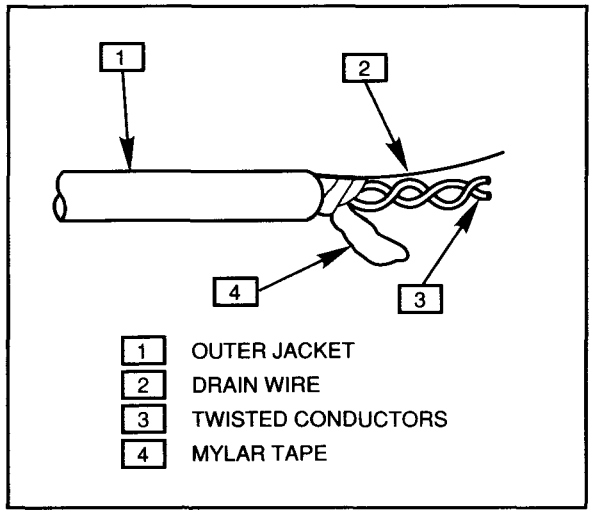

Figure 21 – Twisted/Shielded Cable

Step 1: Remove Outer Jacket

Remove the outer jacket and discard it. Be careful to avoid cutting into the drain wire or the mylar tape.

Step 2: Unwrap the Tape

Unwrap the aluminum/mylar tape, but do not remove it. The tape will be used to rewrap the twisted conductors after the splices have been made.

Step 3: Prepare the Splice

Untwist the conductors. Then, prepare the splice by following the splicing instructions for copper wire presented earlier. Remember to stagger splices to avoid shorts (Figure 22).

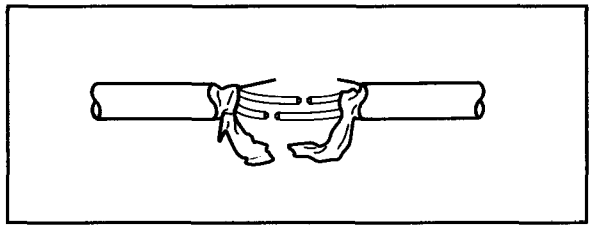

Figure 22 – Untwisted Conductors

Step 4: Reassemble the Cable

After you have spliced and taped each wire, rewrap the conductors with the mylar tape. Be careful to avoid wrapping the drain wire in the tape.

Next, splice the drain wire following the splicing instructions for copper wire. Then, wrap the drain wire around the conductors and mylar tape (Figure 23).

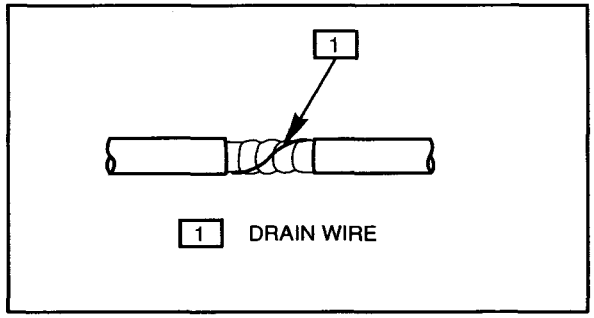

Figure 23 – Reassembled Cable

Step 5: Tape the Cable

Tape over the entire cable using a winding motion (Figure 24). This tape will replace the section of the jacket you removed to make the repair.

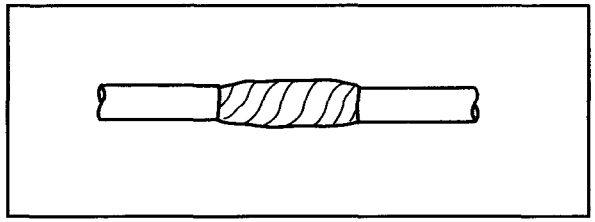

Figure 24 – Proper Taping

REPAIRING CONNECTORS

Weatherproof Connectors

The weatherproof connection system is used to provide weather protection on certain electrical circuits. Substitute connectors and terminals cannot be used to replace the weatherproof system, nor can cable or connector seals be left off from the repair method. If a weatherproof connection is damaged or requires repair for any reason, a new weatherproof connector must be spliced back into the harness. Refer to the "Splicing Copper Wire," "Splicing Aluminum Wire," or "Splicing Twisted/Shielded Cable" procedure earlier in this cell.

Molded Connectors

If a molded connector is damaged, it must be removed from the harness. It can be replaced by a similar connector. The new connector must be spliced back into the harness following recommended splicing procedures.

REPLACING TERMINALS

Often, the need to replace one or more terminals within a connector may arise. There are three basic types of terminals: The first is the push-to-seat type (Figure 25), the second is the pull-to-seat type (Figure 26) and the third is the Weather Pack type (Figure 27). Use available terminal repair kit J-38449 and follow the steps below. See Figure 28. Refer to the terminal repair kit for further information.

Step 1: Cut off terminal between core and insulation crimp. Remove seal on Weather Pack terminals.

Step 2: For Weather Pack terminals, apply correct seal, depending on wire size. Slide back along wire to enable insulation removal.

Step 3: Remove insulation as necessary.

Step 4: For Weather Pack terminals, align seal with end of insulation.

Step 5: Position stripped wire in terminal.

Step 6: Hand crimp core wings.

Step 7: Hand crimp insulation wings.

Step 8: Solder terminal to wire.

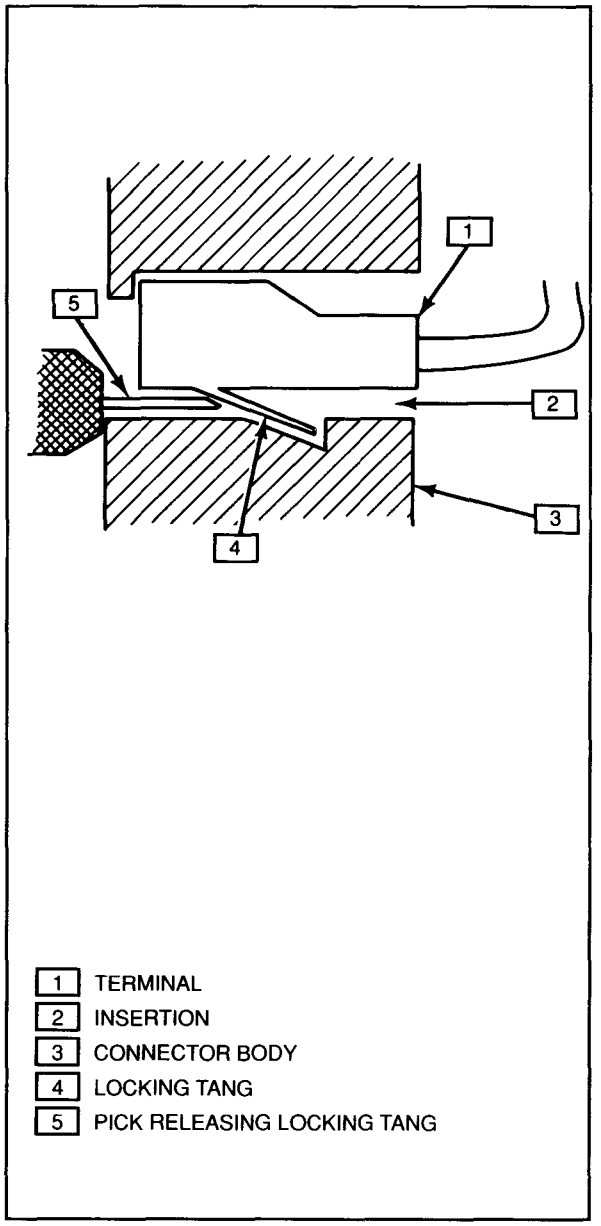

Figure 25 – Typical Push-to-Seat Connector and Terminal

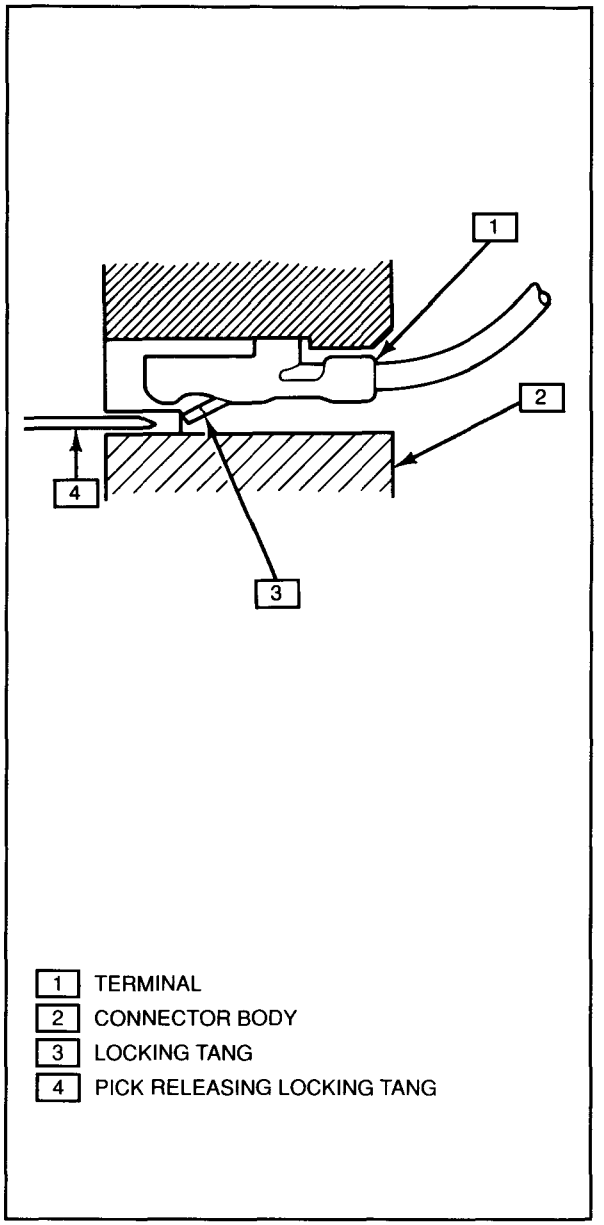

Figure 26 – Typical Pull-to-Seat Connector and Terminal

REPAIR PROCEDURES

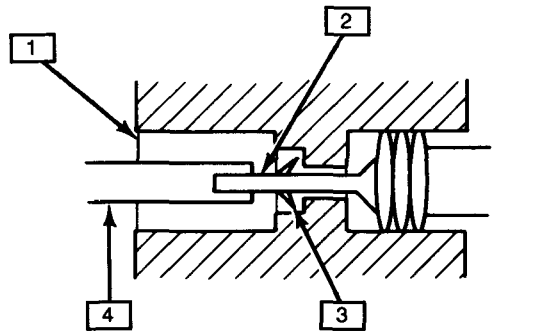

1 CONNECTOR BODY
2 TERMINAL
3 LOCKING TANG
4 WEATHER PACK® TERMINAL REMOVAL TOOL

Figure 27 – Typical Weather Pack® Connector and Terminal

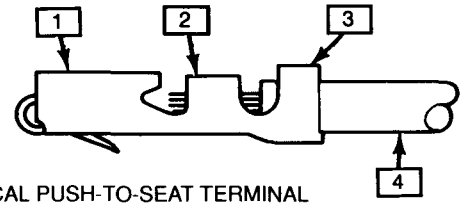

TYPICAL PUSH-TO-SEAT TERMINAL

1 MATING END
2 CORE WINGS
3 INSULATION WINGS
4 CABLE

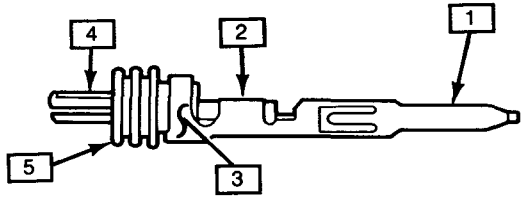

TYPICAL WEATHER PACK® TERMINAL

1 MATING END
2 CORE WINGS
3 INSULATION WINGS
4 CABLE
5 SEAL

Figure 28 – Terminal Repair

BLANK

VEHICLE ZONING

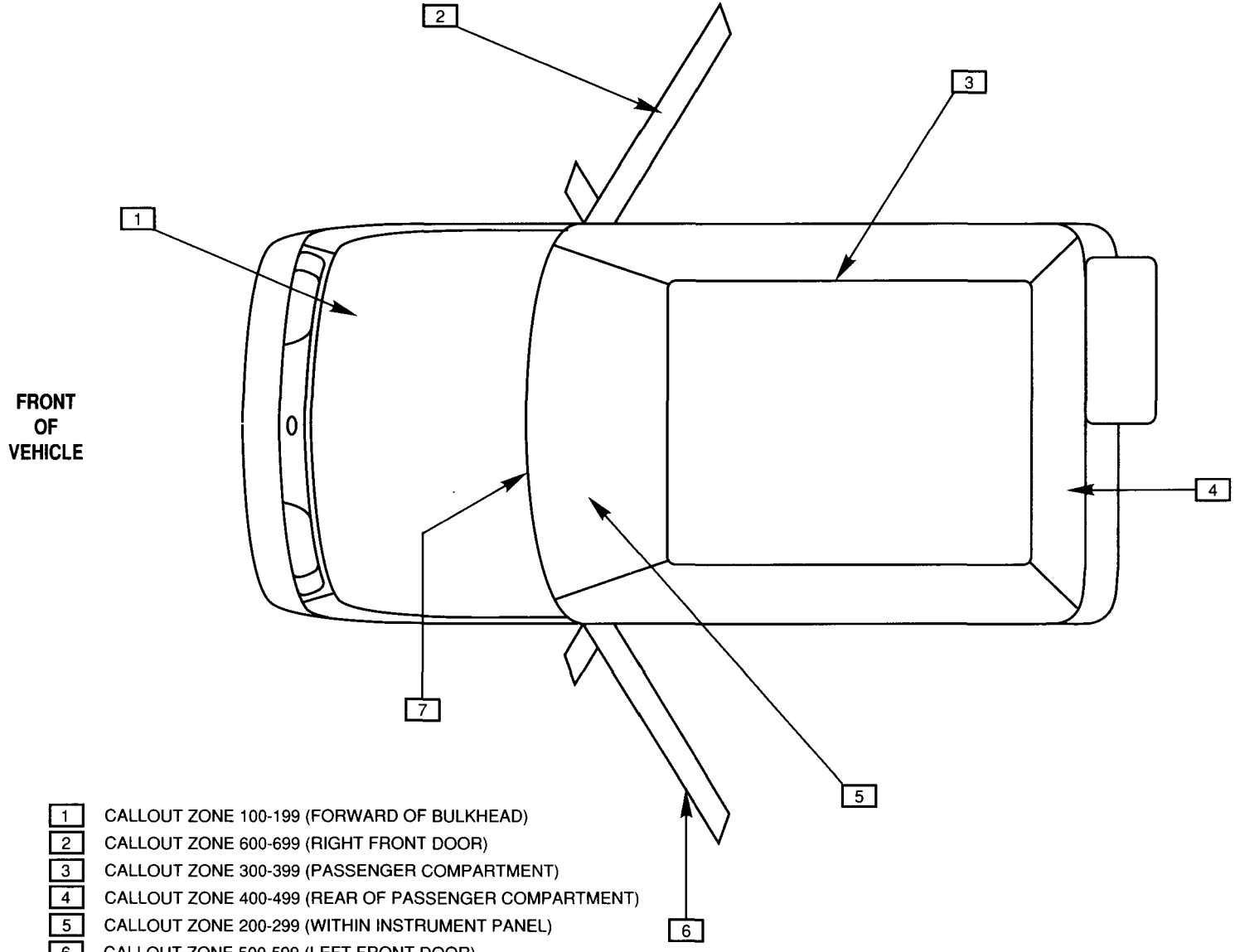

1 CALLOUT ZONE 100-199 (FORWARD OF BULKHEAD)
2 CALLOUT ZONE 600-699 (RIGHT FRONT DOOR)
3 CALLOUT ZONE 300-399 (PASSENGER COMPARTMENT)
4 CALLOUT ZONE 400-499 (REAR OF PASSENGER COMPARTMENT)
5 CALLOUT ZONE 200-299 (WITHIN INSTRUMENT PANEL)
6 CALLOUT ZONE 500-599 (LEFT FRONT DOOR)
7 CALLOUT ZONE 900-999 (BULKHEAD)

Figure 1 – Vehicle Zoning Callout Chart

VEHICLE ZONING

VEHICLE ZONING

All connectors, grounds, and splices are labeled with a locational designation number. These numbers will help you locate the connector, ground, or splice in the vehicle. For example, connector C605 will be located somewhere in the right front door. For further information regarding these locations and labels, refer to the "Vehicle Zoning Callout Chart" (Figure 1).

POWER DISTRIBUTION

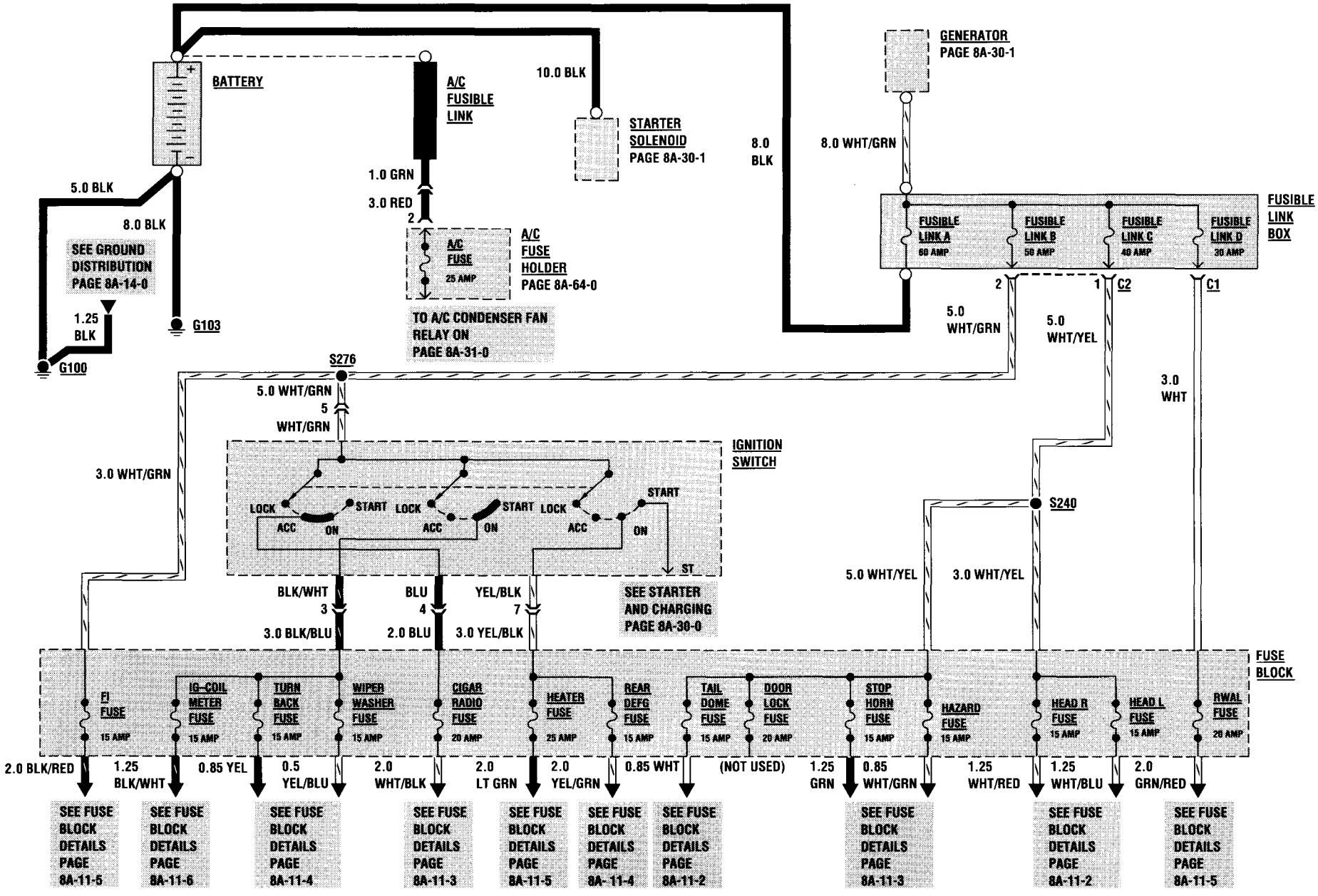

POWER DISTRIBUTION

COMPONENT	LOCATION	FIGURE	CONNECTOR
A/C Fuse Holder	RH Engine Compartment attached to A/C Compressor Clutch Relay	201-02/A	
A/C Fusible Link	Connected to Positive Battery Terminal	201-02/A	
Battery	RH Rear Engine Compartment behind Strut Tower	201-00/B	
Fuse Block	Under I/P left of Steering Column	201-05/A	
Fusible Link Box	RH Engine Compartment on Inner Fender	201-00/B	
C1 (1 Cavity)	Main Harness to Fusible Link Box, below box		
C2 (2 Cavities)	Main Harness to Fusible Link Box, below box		
Generator	RH front of Engine	201-04/A	
Ignition Switch	On Steering Column	201-05/A	202-06/C1
Starter Solenoid	On lower RH side of Engine, on Starter	201-04/A	
S240	Main Harness, behind LH I/P near Fuse Block	201-05/A	
S276	Main Harness, behind I/P left of Steering Column	201-05/A	
G100	RH Rear Engine Compartment near Battery	201-01/A	
G103	RH Rear Engine Compartment above Starter	201-04/A	

FUSE BLOCK DETAILS

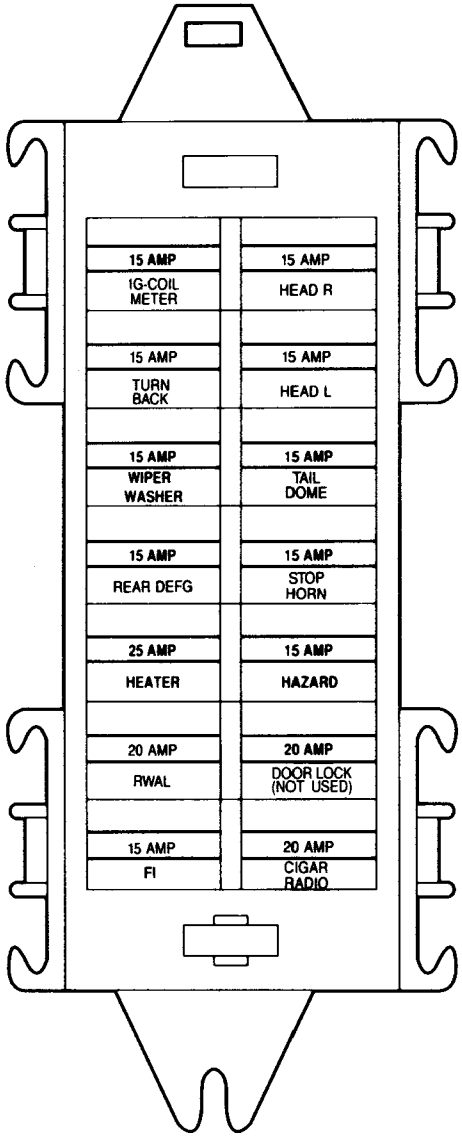

FUSE BLOCK

FUSE BLOCK DETAILS

FUSE APPLICATIONS

A/C FUSE (25A)
- A/C Compressor Clutch Relay
- A/C Condenser Fan Relay

CIGAR RADIO FUSE (20A)
- Cigar Lighter
- Radio Power Input

DOOR LOCK FUSE (20A)
- Not Used

FI FUSE (15A)
- Main Relay

HAZARD FUSE (15A)
- Hazard Lamps

HEAD L FUSE (15A)
- LH Headlamp
- High-Beam Indicator

HEAD R FUSE (15A)
- RH Headlamp

HEATER FUSE (25A)
- A/C Amplifier
- Blower Speed Selector Switch
- Dual Pressure Switch

IG-COIL METER FUSE (15A)
- Audio Alarm Module
- Daytime Running Lights (DRL) Controller (Canada)
- Fuel Pump Relay
- Generator
- Ignition Coil
- I/P Gages
- I/P Indicators
- Main Relay
- Noise Suppressor Condenser
- Heated Oxygen Sensor (HO2S)
- Stoplamp Switch (Automatic Transmission)

REAR DEFG FUSE (15A)
- Rear Defogger Switch
- Rear Wheel Antilock (RWAL) Brake Relay

RWAL FUSE (20A)
- Rear Wheel Antilock (RWAL) Brake Relay

STOP HORN FUSE (15A)
- Horn Relay
- Stoplamp Switch

TAIL DOME FUSE (15A)
- Dome Lamp
- Electronic Brake Control Module (EBCM)
- Engine Control Module (ECM)
- Ignition Key Warning Switch
- License Plate Lamps
- Radio Clock
- Radio Illumination
- Radio Memory
- Rear Wheel Antilock (RWAL) Brake Data Link Connector (DLC)
- Taillamps

TURN BACK FUSE (15A)
- Backup Lamps
- Turn Signal Lamps

WIPER WASHER FUSE (15A)
- Front Washer Pump
- Front Wiper Motor
- Rear Wiper Motor (Hardtop – LSi)
- Rear Wiper/Washer Switch (Hardtop – LSi)
- Shift Lock Relay (Automatic Transmission)

FUSE BLOCK DETAILS

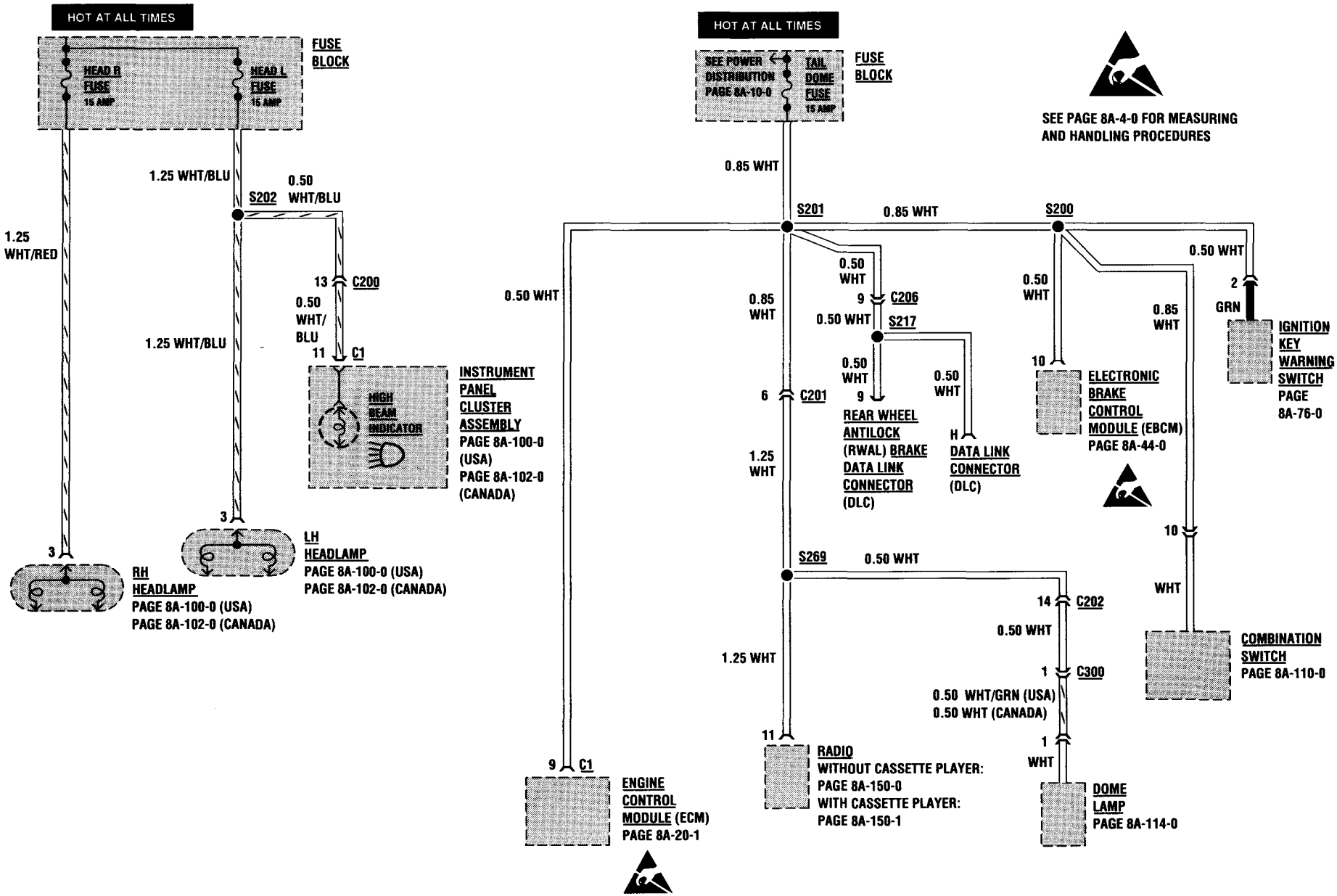

FUSE BLOCK DETAILS

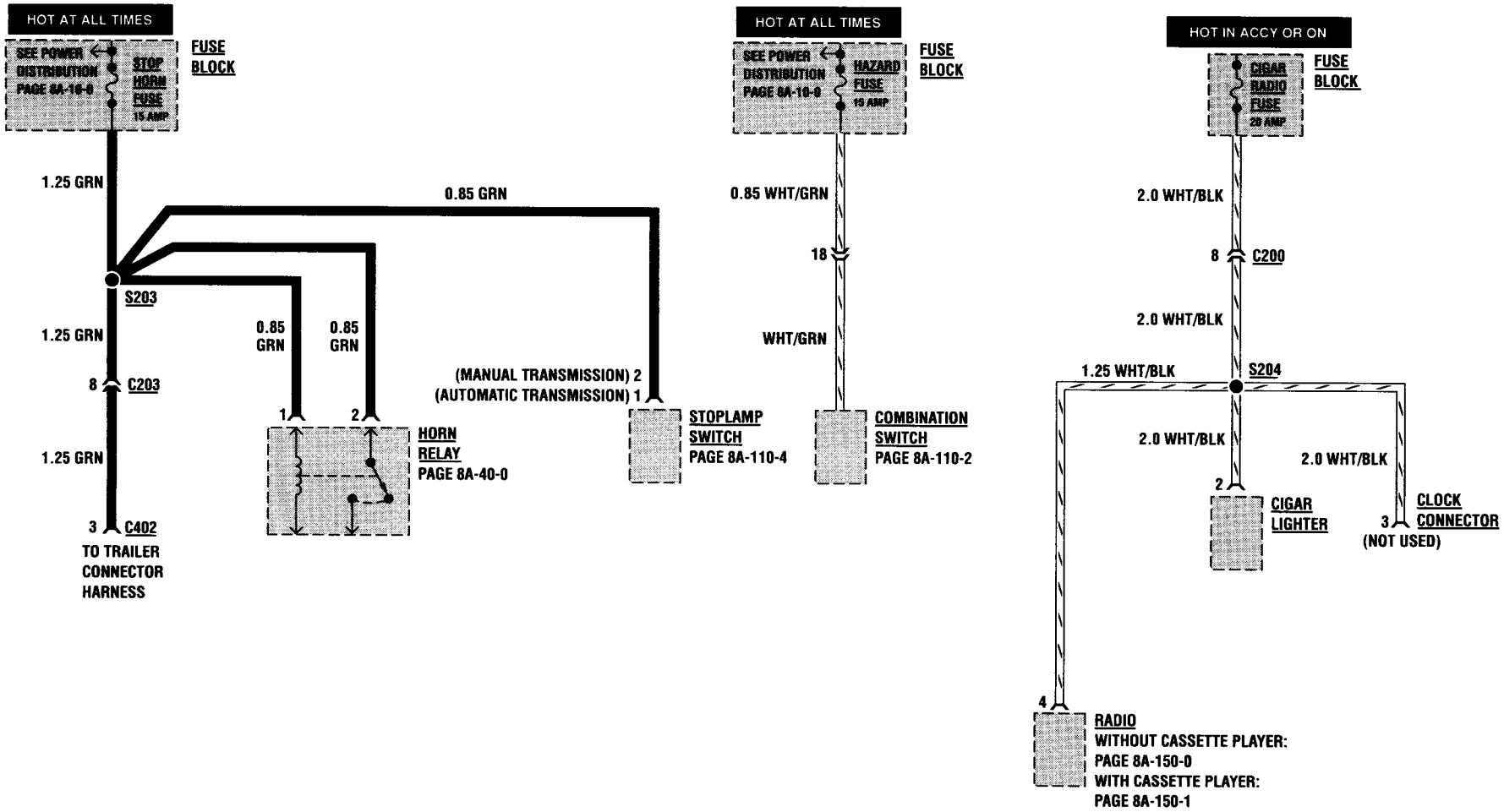

FUSE BLOCK DETAILS

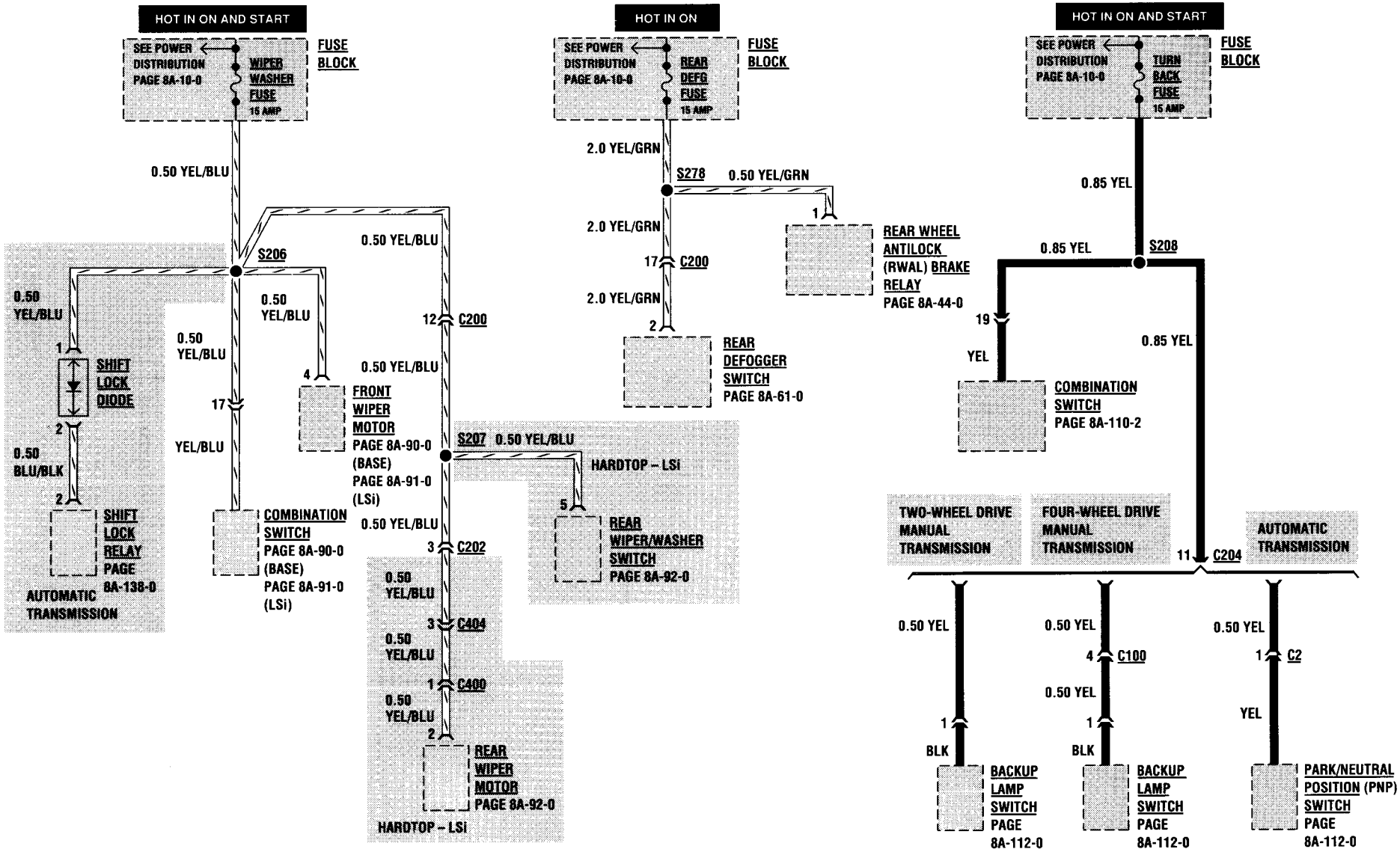

FUSE BLOCK DETAILS

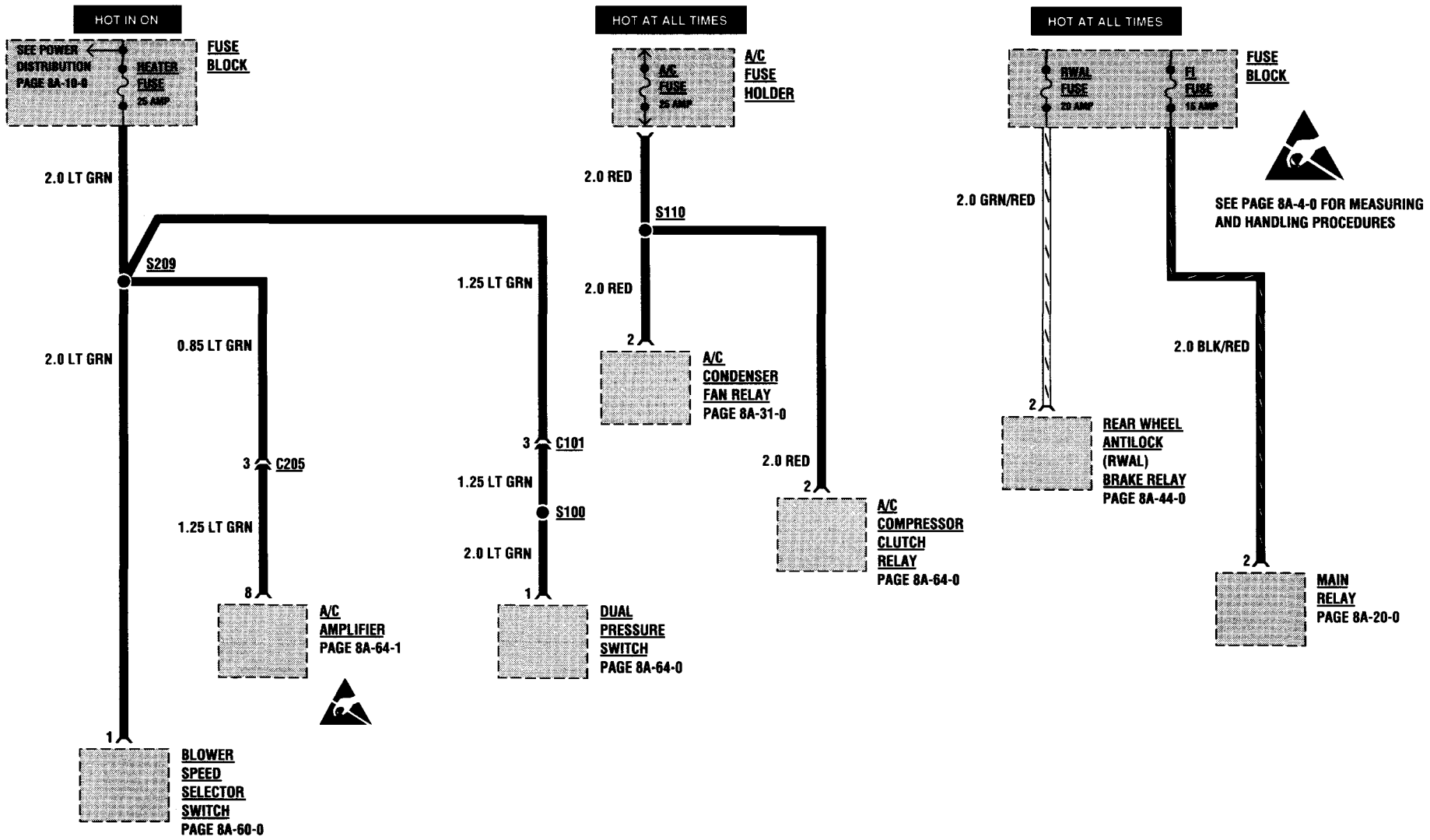

FUSE BLOCK DETAILS

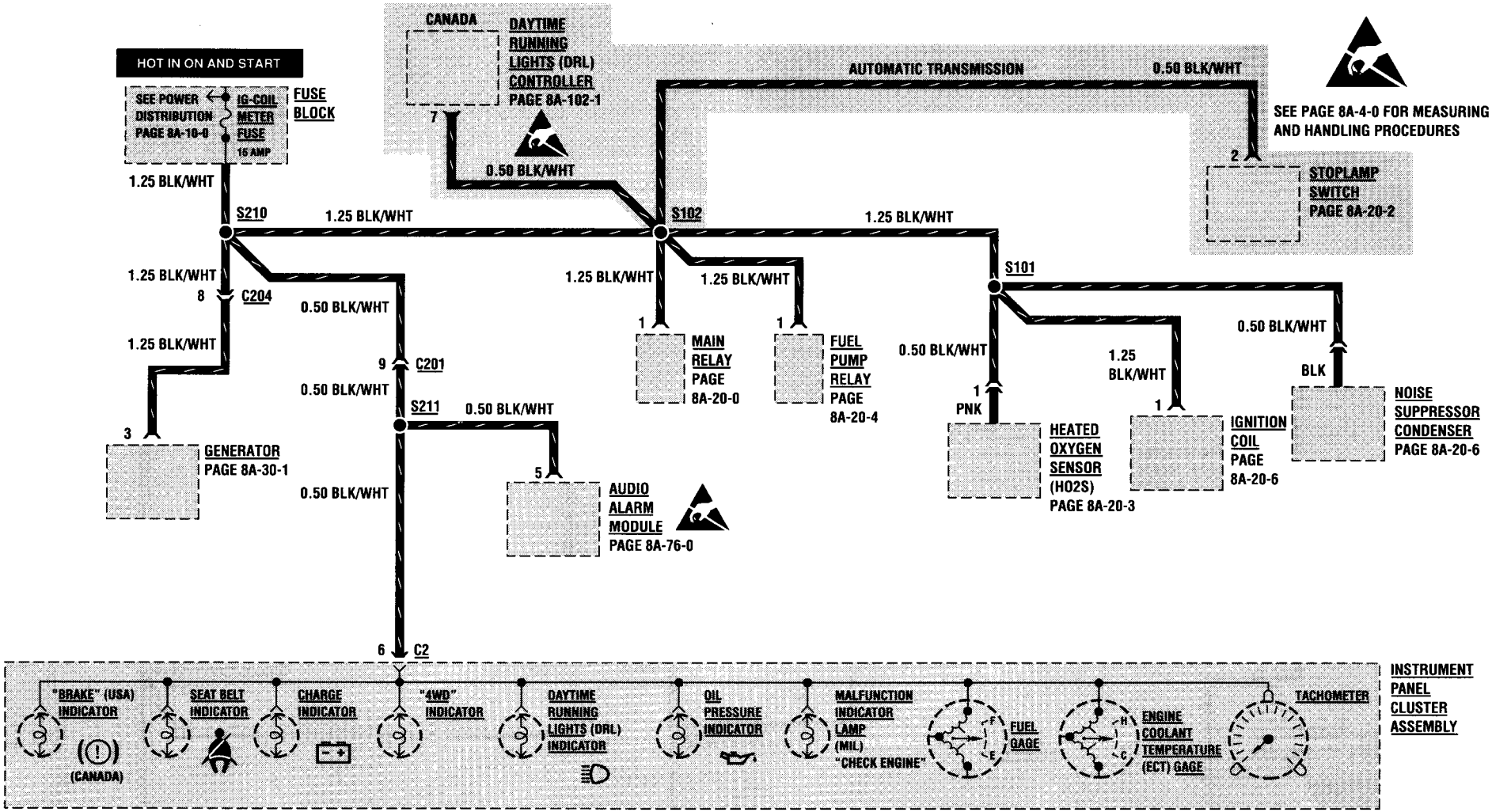

FUSE BLOCK DETAILS

COMPONENT	LOCATION	FIGURE	CONNECTOR
A/C Amplifier	Behind RH I/P on Evaporator	201-05/A	64-10
A/C Compressor Clutch Relay	RH Engine Compartment near Fusible Link Box	201-02/A	202-07/C3
A/C Condenser Fan Relay	RH Engine Compartment near Fusible Link Box	201-02/A	202-07/C3
A/C Fuse Holder	RH Engine Compartment attached to A/C Compressor Clutch Relay	201-02/A	
Audio Alarm Module	Behind I/P above RH Front Speaker	201-06/A	76-08
Backup Lamp Switch (Manual Transmission)	Mounted on top of Transmission	201-11/B	
Blower Speed Selector Switch	Center of I/P above Radio	201-05/A	202-07/B3
Cigar Lighter	Center of I/P below Radio	201-06/A	202-07/C3
Combination Switch	On Steering Column	201-05/A	202-00/A1
Data Link Connector (DLC)	Under LH I/P near Fuse Block		50-02
Daytime Running Lights (DRL) Controller (Canada)	Behind I/P left of Steering Column	201-05/A	102-08
Dual Pressure Switch	RH Front Engine Compartment behind Radiator	201-02/A	
Electronic Brake Control Module (EBCM)	Under LH I/P near Fuse Block	201-05/A	44-04
Engine Control Module	Under LH I/P		
C1 (17 Cavities)	Main Harness to ECM, behind I/P left of Steering Column	201-05/A	20-13
Front Wiper Motor	LH Rear Engine Compartment on Bulkhead	201-03/A	202-07/C3
Fuel Pump Relay	Under LH I/P mounted to ECM	201-05/A	202-06/C2
Fuse Block	Under I/P left of Steering Column	201-05/A	
Generator	RH front of Engine	201-04/A	
Heated Oxygen Sensor (HO2S)	LH side of Engine in Exhaust Manifold	201-03/A	202-08/B1
Horn Relay	Under LH I/P mounted to ECM	201-05/A	202-06/B1
Ignition Coil	LH Rear Engine Compartment on Bulkhead	201-03/A	
Ignition Key Warning Switch	RH side of Steering Column	201-05/A	
Instrument Panel Cluster Assembly	LH I/P	201-06/A	
C1 (12 Terminals)	I/P Harness to I/P Cluster Assembly, behind I/P Cluster Assembly	201-06/A	81-08
C2 (10 Terminals)	I/P Harness to I/P Cluster Assembly, behind I/P Cluster Assembly	201-06/A	81-08
Main Relay	Under LH I/P mounted to ECM	201-05/A	202-07/C3
Noise Suppressor Condenser	LH Rear Engine Compartment above Ignition Coil	201-03/A	

FUSE BLOCK DETAILS

COMPONENT	LOCATION	FIGURE	CONNECTOR
Park/Neutral Position (PNP) Switch			
(Automatic Transmission)	RH side of Transmission	201-11/A	
C2 (4 Cavities)	Engine Harness to Park/Neutral Position (PNP) Switch, rear of Engine		202-06/A2
Radio	Center of I/P	201-06/A	150-15
Rear Defogger Switch (Hardtop)	I/P left of Steering Column	201-06/A	202-07/A3
Rear Wheel Antilock (RWAL) Brake Data Link Connector (DLC)	Under LH I/P near Fuse Block		44-05
Rear Wheel Antilock (RWAL) Brake Relay	Under LH I/P mounted to ECM	201-05/A	202-06/A3
Rear Wiper Motor (Hardtop – LSi)	In Center of Back Door	201-09/A	202-07/C3
Rear Wiper/Washer Switch (Hardtop – LSi)	LH I/P right of Steering Column	201-06/A	202-06/B2
Shift Lock Diode (Automatic Transmission)	Behind I/P left of Steering Column		
Shift Lock Relay (Automatic Transmission)	Under LH I/P above Brake Pedal	201-05/A	202-06/B1
Stoplamp Switch	Under LH I/P above Brake Pedal		
	(Manual Transmission)	201-05/A	
	(Automatic Transmission)	201-05/A	202-07/C3
C100 (6 Cavities)	Engine Harness to Transmission Harness, RH rear side of Engine	201-04/A	202-07/A2
C101 (4 Cavities)	Main Harness to Outer A/C Harness, RH Rear Engine Compartment near Battery	201-00/A	202-06/B3
C200 (22 Cavities)	I/P Harness to Main Harness, behind I/P left of Steering Column	201-05/A	202-01/A1
C201 (10 Cavities)	I/P Harness to Main Harness, behind I/P left of Steering Column	201-05/A	202-02/A1
C202 (20 Cavities)	I/P Harness to Floor Harness 1, behind I/P left of Steering Column	201-06/A	202-03/A1
C203 (8 Cavities)	Main Harness to Floor Harness 1, behind I/P left of Steering Column	201-05/A	202-07/C2
C204 (22 Cavities)	Main Harness to Engine Harness, behind I/P left of Steering Column	201-05/A	202-04/A1
C205 (10 Cavities)	Main Harness to Inner A/C Harness, behind I/P right of Radio	201-05/A	202-02/A2
C206 (10 Cavities)	Main Harness to DLC and RWAL Brake DLC, under LH I/P near Fuse Block	201-05/A	202-05/A1

FUSE BLOCK DETAILS

COMPONENT	LOCATION	FIGURE	CONNECTOR
C300 (2 Cavities)	Floor Harness 1 to Dome Lamp Harness, behind LH Rear Passenger Compartment Trim Panel	201-07/A	
C400 (3 Cavities) (Hardtop – LSi)	Rear Lamp Harness to Back Door Harness, behind RH Rear Wheelhousing	201-08/A	
C402 (6 Cavities)	Floor Harness 1 to Trailer Connector Harness, behind LH Rear Wheelhousing	201-07/A	202-07/A1
C404 (6 Cavities)	Floor Harness 1 to Rear Lamp Harness, behind LH Rear Wheelhousing	201-08/A	202-06/C3
S100	Outer A/C Harness, RH Engine Compartment near Strut Tower	201-01/A	
S101	Main Harness, at Bulkhead near Front Wiper Motor	201-03/A	
S102	Main Harness, at Bulkhead near Front Wiper Motor	201-03/A	
S110	Outer A/C Harness, RH Engine Compartment near Strut Tower	201-01/A	
S200	Main Harness, behind I/P left of Steering Column	201-05/A	
S201	Main Harness, behind I/P left of Steering Column	201-05/A	
S202	Main Harness, behind LH I/P near Fuse Block	201-05/A	
S203	Main Harness, behind I/P left of Steering Column	201-05/A	
S204	I/P Harness, behind Center I/P near Radio	201-06/A	
S206	Main Harness, behind LH I/P near Fuse Block	201-05/A	
S207 (Hardtop – LSi)	I/P Harness, behind I/P near LH Front Speaker	201-06/A	
S208	Main Harness, behind LH I/P near Fuse Block	201-05/A	
S209	Main Harness, behind Center I/P near Blower Speed Selector Switch	201-05/A	
S210	Main Harness, behind LH I/P near Fuse Block	201-05/A	
S211	I/P Harness, behind I/P near LH Front Speaker	201-06/A	
S217	Diagnostic Connector Harness, behind LH I/P near Fuse Block		
S269	Main Harness, behind LH I/P right of Steering Column	201-05/A	
S278	Main Harness, behind LH I/P near Fuse Block	201-05/A	

GROUND DISTRIBUTION: G100, G101, G102 AND G103

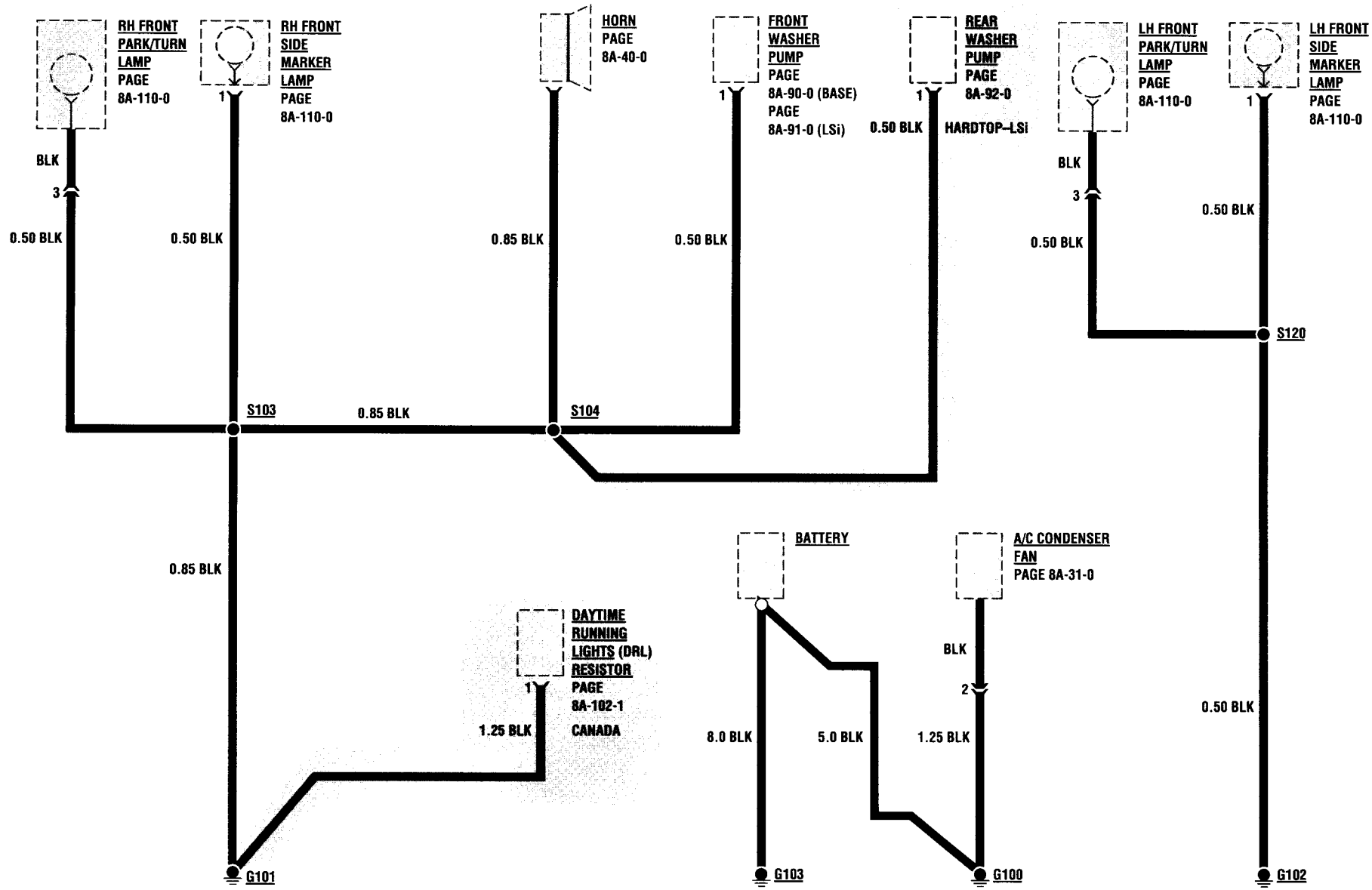

GROUND DISTRIBUTION: G104, G105, G106 AND G107

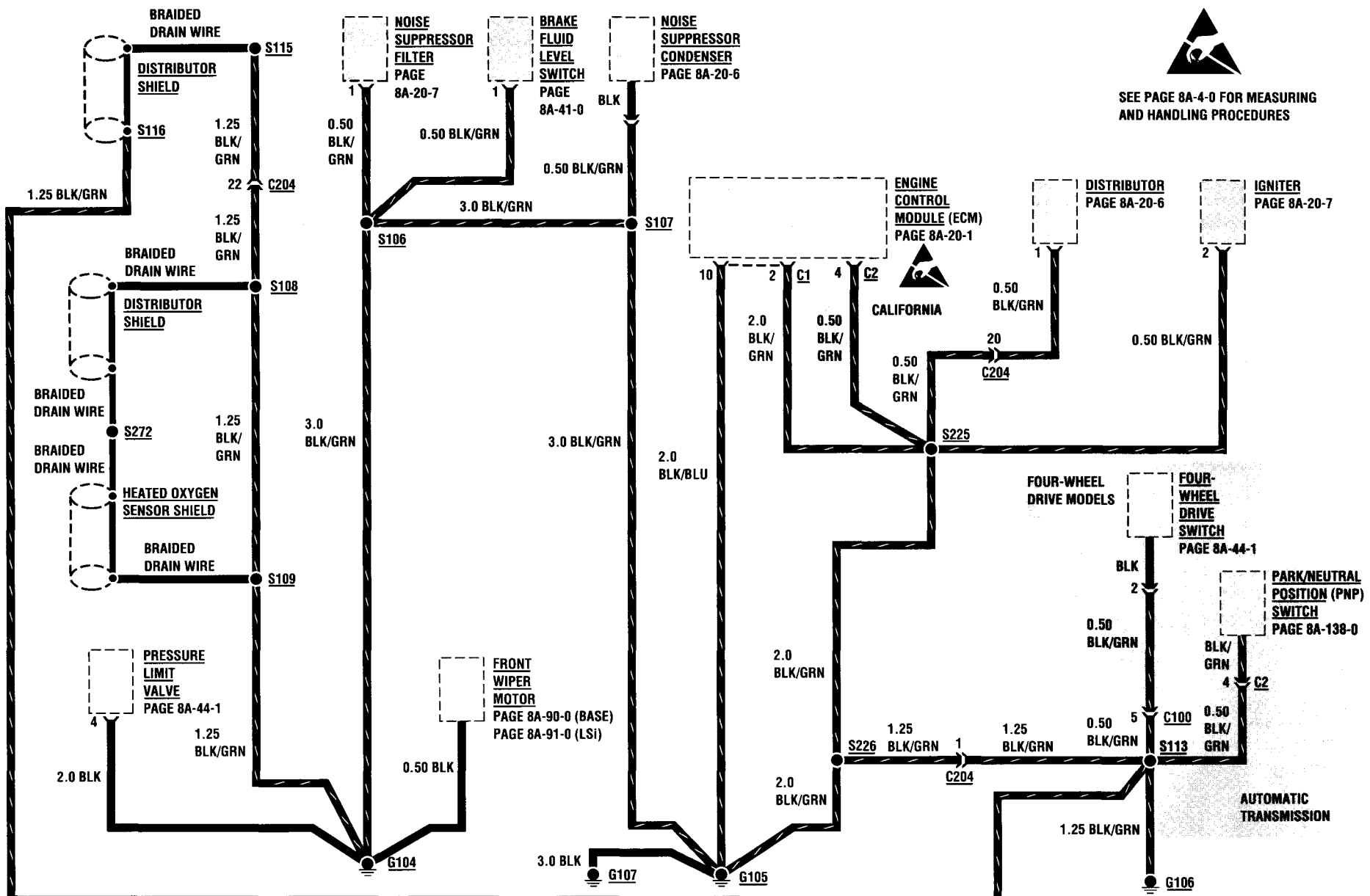

GROUND DISTRIBUTION: G200 AND G201

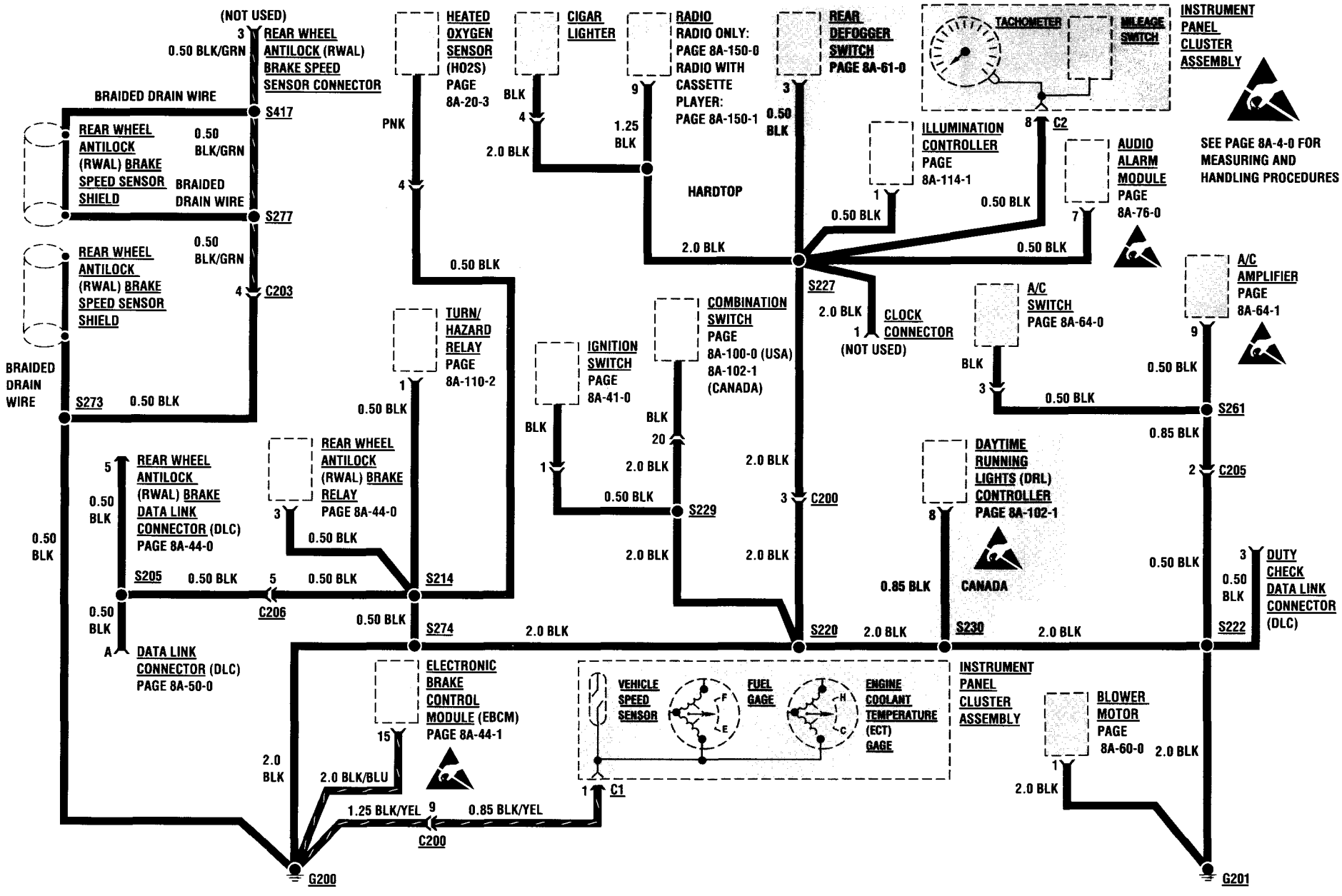

GROUND DISTRIBUTION: G400, G401 AND G403

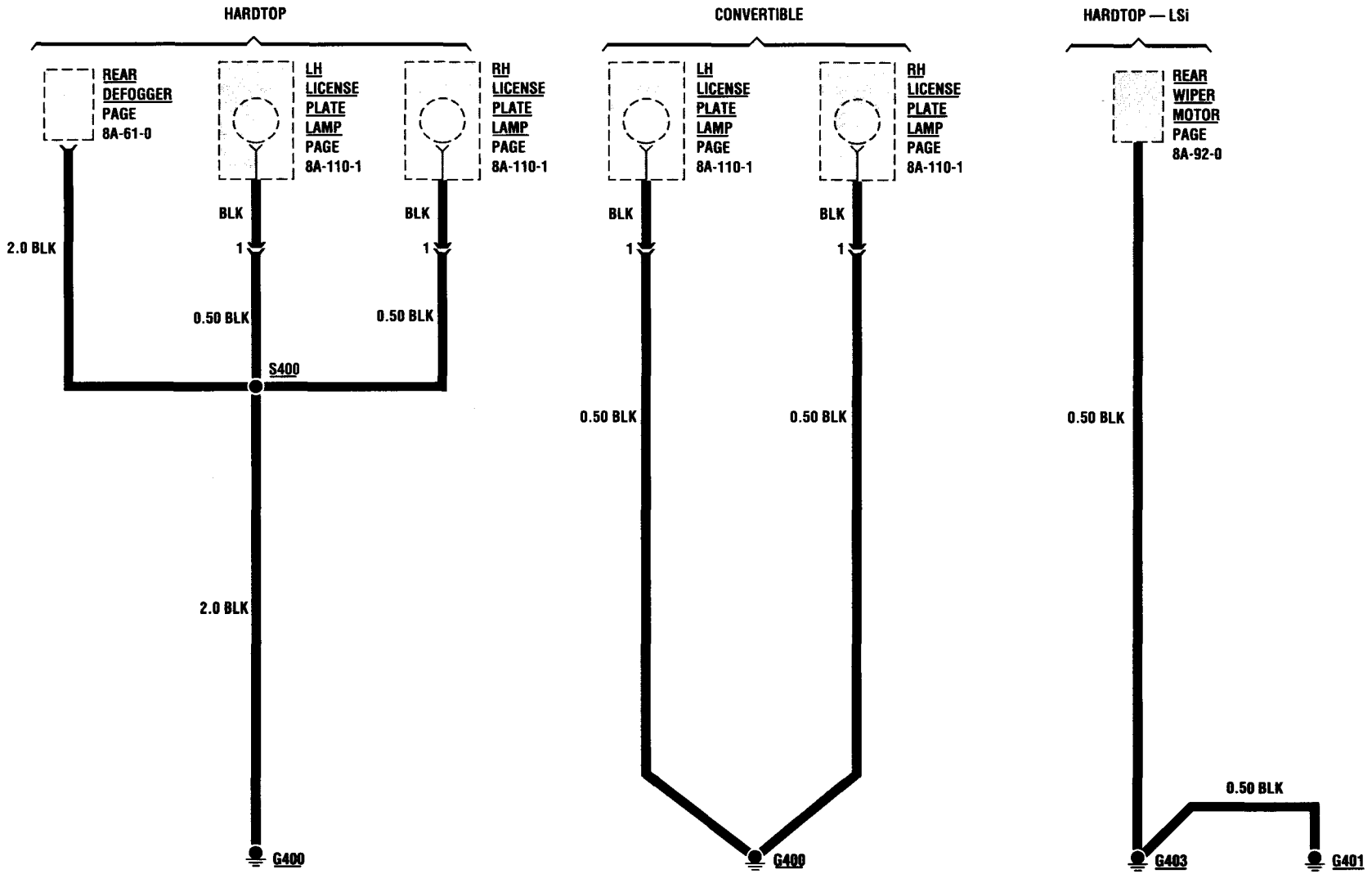

GROUND DISTRIBUTION: G402

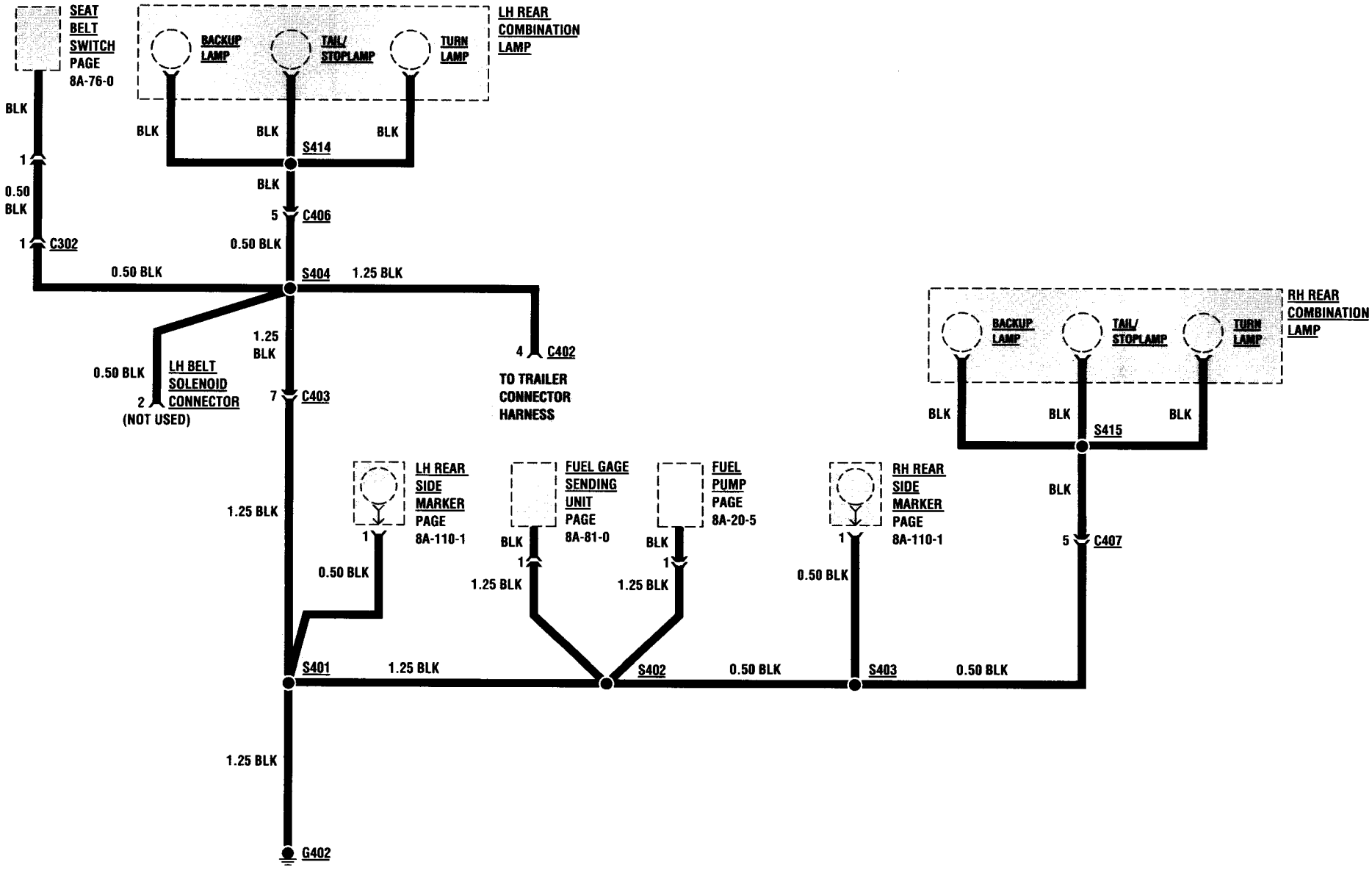

GROUND DISTRIBUTION

COMPONENT	LOCATION	FIGURE	CONNECTOR
A/C Amplifier	Behind RH I/P on Evaporator	201-05/A	64-10
A/C Condenser Fan	Between Grille and Radiator	201-02/A	
A/C Switch	Center of I/P above Radio	201-05/A	
Audio Alarm Module	Behind I/P above RH Front Speaker	201-06/A	76-08
Battery	RH Rear Engine Compartment behind Strut Tower	201-00/B	
Blower Motor	Behind RH I/P	201-05/A	
Brake Fluid Level Switch	LH rear of Engine Compartment on Brake Fluid Reservoir	201-03/A	
Cigar Lighter	Center of I/P below Radio	201-06/A	202-07/C3
Combination Switch	On Steering Column	201-05/A	202-00/A1
Data Link Connector (DLC)	Under LH I/P near Fuse Block		50-02
Daytime Running Lights (DRL) Controller (Canada)	Behind I/P left of Steering Column	201-05/A	102-08
Daytime Running Lights (DRL) Resistor (Canada)	Inside RH Fender above Wheelhousing		
Distributor	Rear of Engine	201-03/A	202-08/A1
Duty Check Data Link Connector (DLC)	RH Engine Compartment near Fusible Link Box	201-00/B	202-07/B2
Electronic Brake Control Module (EBCM)	Under LH I/P near Fuse Block	201-05/A	44-04
Engine Control Module (ECM)	Under LH I/P		
C1 (17 Cavities)	Main Harness to ECM, behind I/P left of Steering Column	201-05/A	20-13
C2 (24 Cavities)	Main Harness to ECM, behind I/P left of Steering Column	201-05/A	20-14
Four-Wheel Drive Switch	Top of Transfer Case		
	(Manual Transmission)	201-11/B	
	(Automatic Transmission)	201-11/A	
Front Washer Pump	RH Front Engine Compartment on Washer Fluid Reservoir	201-01/A	
Front Wiper Motor	LH Rear Engine Compartment on Bulkhead	201-03/A	202-07/C3
Fuel Gage Sending Unit	In Fuel Tank	201-08/A	
Fuel Pump	In Fuel Tank	201-08/A	
Heated Oxygen Sensor (HO2S)	LH side of Engine in Exhaust Manifold	201-03/A	202-08/B1
Horn	Behind RH side of Grille	201-01/A	
Igniter	LH Rear Engine Compartment on Bulkhead	201-03/A	
Ignition Switch	On Steering Column	201-05/A	202-06/C1
Illumination Controller	I/P left of Steering Column	201-06/A	
Instrument Panel Cluster Assembly	LH I/P	201-06/A	
C1 (12 Terminals)	I/P Harness to I/P Cluster Assembly, behind I/P Cluster Assembly	201-06/A	81-08
C2 (10 Terminals)	I/P Harness to I/P Cluster Assembly, behind I/P Cluster Assembly	201-06/A	81-08

GROUND DISTRIBUTION

COMPONENT	LOCATION	FIGURE	CONNECTOR
Noise Suppressor Condenser	LH Rear Engine Compartment above Ignition Coil	201-03/A	
Noise Suppressor Filter	LH Rear Engine Compartment below Front Wiper Motor	201-03/A	
Park/Neutral Position (PNP) Switch (Automatic Transmission)	RH side of Transmission	201-11/A	
C2 (4 Cavities)	Engine Harness to Park/Neutral Position (PNP) Switch, rear of Engine		202-06/A2
Pressure Limit Valve	LH Rear Engine Compartment near Strut Tower	201-03/A	202-08/C1
Radio	Center of I/P	201-06/A	150-15
Rear Defogger (Hardtop)	In Rear Window	201-09/A	
Rear Defogger Switch (Hardtop)	I/P left of Steering Column	201-06/A	202-07/A3
Rear Washer Pump (Hardtop – LSi)	RH Front Engine Compartment on Washer Fluid Reservoir	201-01/A	
Rear Wheel Antilock (RWAL) Brake Data Link Connector (DLC)	Under LH I/P near Fuse Block		44-05
Rear Wheel Antilock (RWAL) Brake Relay	Under LH I/P mounted to ECM	201-05/A	202-06/A3
Rear Wiper Motor (Hardtop – LSi)	In Center of Back Door	201-09/A	202-07/C3
Seat Belt Switch	On floor of Passenger Compartment in Seat Belt Latch	201-07/A	
Turn/Hazard Relay	Under LH I/P mounted to ECM	201-05/A	
C100 (6 Cavities)	Engine Harness to Transmission Harness, RH rear side of Engine	201-04/A	202-07/A2
C200 (22 Cavities)	I/P Harness to Main Harness, behind I/P left of Steering Column	201-05/A	202-01/A1
C203 (8 Cavities)	Main Harness to Floor Harness 1, behind I/P left of Steering Column	201-05/A	202-07/C2
C204 (22 Cavities)	Main Harness to Engine Harness, behind I/P left of Steering Column	201-05/A	202-04/A1
C205 (10 Cavities)	Main Harness to Inner A/C Harness, behind I/P right of Radio	201-05/A	202-02/A2
C206 (10 Cavities)	Main Harness to DLC and RWAL Brake DLC, under LH I/P near Fuse Block	201-05/A	202-05/A1
C302 (3 Cavities)	Floor Harness 1 to Floor Harness 2, behind LH Rear Passenger Compartment Trim Panel	201-07/A	
C402 (6 Cavities)	Floor Harness 1 to Trailer Harness, behind LH Rear Wheelhousing	201-07/A	202-07/A1
C403 (12 Cavities)	Floor Harness 1 to Rear Lamp Harness, behind LH Rear Wheelhousing	201-08/A	202-05/A2
C406 (6 Cavities)	Floor Harness 1 to LH Rear Combination Lamp Jumper, behind LH Rear Wheelhousing	201-08/A	202-07/C1

GROUND DISTRIBUTION

COMPONENT	LOCATION	FIGURE	CONNECTOR
C407 (6 Cavities)	Rear Lamp Harness to RH Rear Combination Lamp Jumper, behind RH Rear Wheelhousing	201-08/A	202-07/C1
S103	Main Harness, behind RH Headlamp	201-01/A	
S104	Main Harness, behind RH Headlamp	201-01/A	
S106	Main Harness, at Bulkhead near Ignition Coil	201-03/A	
S107	Main Harness, at Bulkhead near Ignition Coil	201-03/A	
S108	Main Harness, RH Engine Compartment near Battery	201-01/A	
S109	Main Harness, at Bulkhead near Front Wiper Motor	201-03/A	
S113	Engine Harness, RH Engine Compartment above Starter Motor	201-04/A	
S115	Engine Harness, at Bulkhead near Grommet	201-03/A	
S116	Engine Harness, in Distributor Branch	201-03/A	
S120	Main Harness, behind LH Headlamp	201-00/A	
S205	Diagnostic Connector Harness, behind LH I/P near Fuse Block		
S214	Main Harness, behind I/P left of Steering Column	201-05/A	
S220	Main Harness, behind I/P left of Steering Column	201-05/A	
S222	Main Harness, behind Center I/P near Blower Speed Selector Switch	201-05/A	
S225	Main Harness, behind LH I/P near ECM	201-05/A	
S226	Main Harness, behind LH I/P near ECM	201-05/A	
S227	I/P Harness, behind Center I/P near Radio	201-06/A	
S228	I/P Harness, behind Center I/P near Radio	201-06/A	
S229	Main Harness, behind I/P left of Steering Column	201-05/A	
S230 (Canada)	Main Harness, behind I/P left of Steering Column	201-05/A	
S261	Inner A/C Harness, behind RH I/P near A/C Amplifier	201-05/A	
S272	Main Harness, behind LH I/P near ECM	201-05/A	
S273	Main Harness, behind LH I/P near Electronic Brake Control Module (EBCM)	201-05/A	
S274	Main Harness, behind LH I/P near ECM	201-05/A	
S277	Floor Harness 1, under LH I/P near Grommet	201-07/A	
S400 (Hardtop)	Back Door Harness, near License Plate Lamps	201-09/A	
S401	Rear Lamp Harness, near LH Rear Combination Lamp	201-08/A	
S402	Rear Lamp Harness, near RH Rear Combination Lamp	201-08/A	
S403	Rear Lamp Harness, near RH Rear Combination Lamp	201-08/A	
S404	Floor Harness 1, near LH Rear Combination Lamp	201-07/A	

GROUND DISTRIBUTION

COMPONENT	LOCATION	FIGURE	CONNECTOR
S414	LH Rear Combination Lamp Jumper, near LH Rear Combination Lamp		
S415	RH Rear Combination Lamp Jumper, near RH Rear Combination Lamp		
S417	Floor Harness 1, behind LH Rear Wheelhousing	201-08/A	
G100	RH Rear Engine Compartment near Battery	201-01/A	
G101	RH Front Engine Compartment near Washer Fluid Reservoir	201-01/A	
G102	LH Front Engine Compartment behind Headlamp	201-00/A	
G103	RH Rear Engine Compartment above Starter	201-04/A	
G104	LH Rear Engine Compartment on Bulkhead	201-03/A	
G105	Rear of Engine near Distributor	201-03/A	
G106	Front of Engine above Generator	201-04/A	
G107	On Bulkhead, behind Distributor	201-03/A	
G200	Behind LH I/P above Fuse Block	201-05/A	
G201	Behind RH I/P near Blower Assembly	201-05/A	
G400	Inside Back Door near License Plate Lamps		
	(Hardtop)	201-09/A	
	(Convertible)	201-10/A	
G401 (Hardtop – LSi)	Inside Back Door near Rear Wiper Motor	201-09/A	
G402	Behind LH Rear Wheelhousing	201-08/A	
G403 (Hardtop – LSi)	Inside Back Door near Rear Wiper Motor	201-09/A	

BLANK

ENGINE CONTROLS: 1.6L VIN U

POWER, GROUND, MALFUNCTION INDICATOR LAMP (MIL) AND DIAGNOSTICS

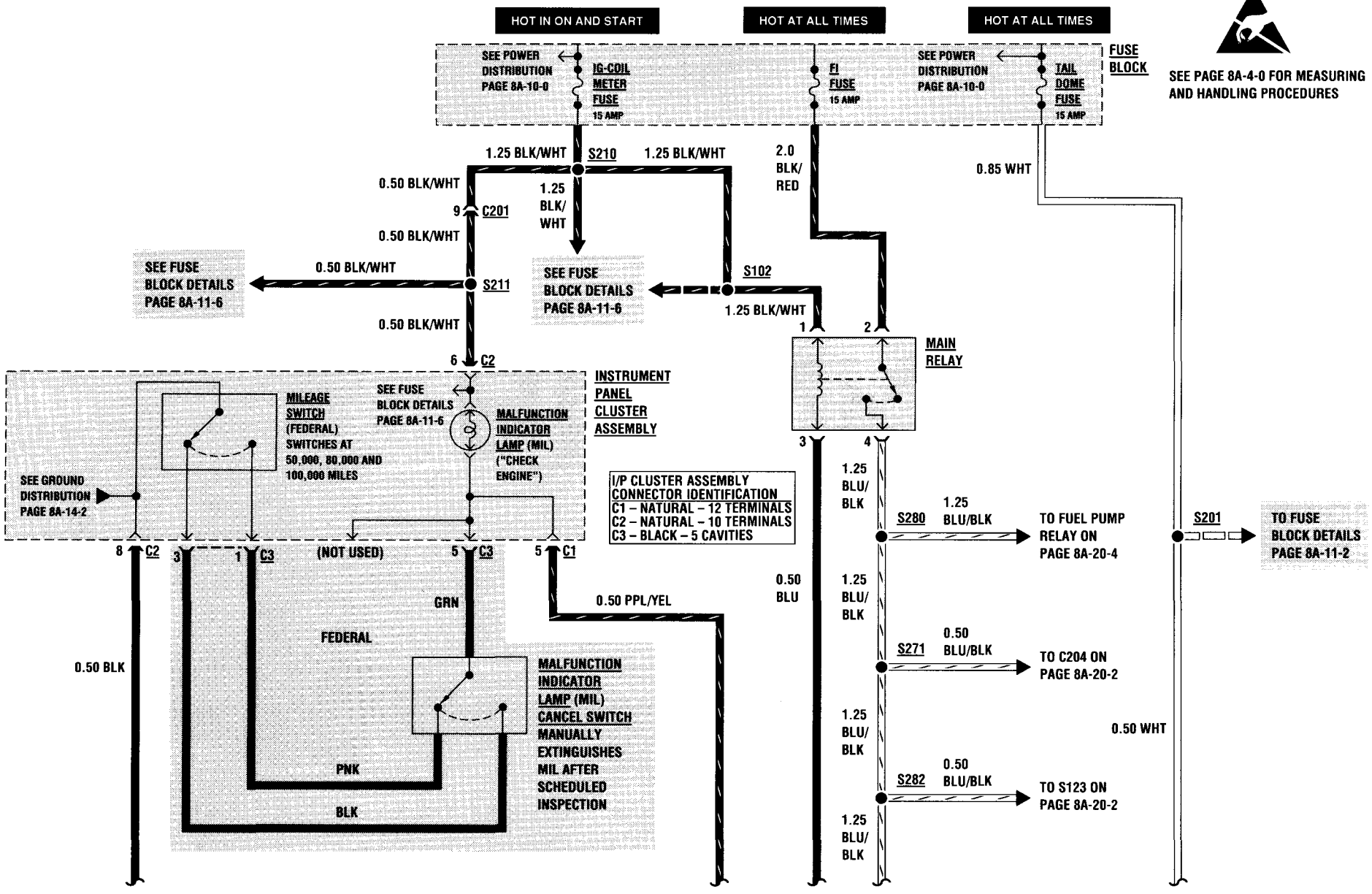

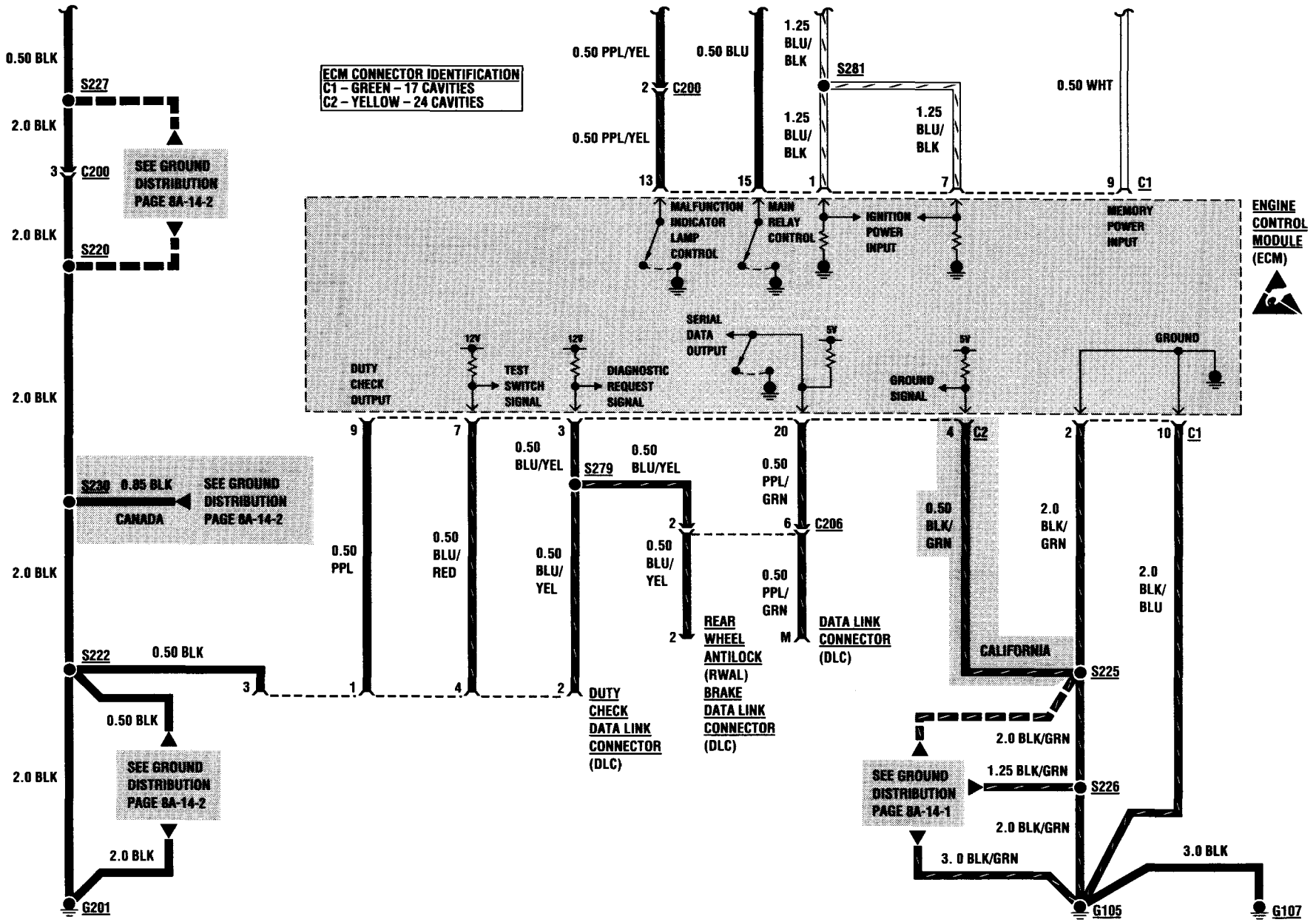
ECM CONNECTOR IDENTIFICATION
C1 – GREEN – 17 CAVITIES
C2 – YELLOW – 24 CAVITIES
ENGINE CONTROL MODULE (ECM)
MALFUNCTION INDICATOR LAMP CONTROL
MAIN RELAY CONTROL
IGNITION POWER INPUT
MEMORY POWER INPUT
SERIAL DATA OUTPUT
DUTY CHECK OUTPUT
TEST SWITCH SIGNAL
DIAGNOSTIC REQUEST SIGNAL
GROUND SIGNAL
GROUND
12V
5V
0.50 BLK
S227
2.0 BLK
C200
SEE GROUND DISTRIBUTION PAGE 8A-14-2
S220
S230
0.85 BLK
CANADA
S222
0.50 BLK
G201
0.50 PPL/YEL
0.50 BLU
1.25 BLU/BLK
S281
0.50 WHT
C1
0.50 BLU/YEL
S279
0.50 PPL/GRN
C206
0.50 PPL
0.50 BLU/RED
0.50 BLU/YEL
REAR WHEEL ANTILOCK (RWAL) BRAKE DATA LINK CONNECTOR (DLC)
DATA LINK CONNECTOR (DLC)
DUTY CHECK DATA LINK CONNECTOR (DLC)
C2
0.50 BLK/GRN
2.0 BLK/GRN
2.0 BLK/BLU
CALIFORNIA
S225
2.0 BLK/GRN
1.25 BLK/GRN
S226
SEE GROUND DISTRIBUTION PAGE 8A-14-1
3.0 BLK/GRN
3.0 BLK
G105
G107

ENGINE CONTROLS: 1.6L VIN U

TRANSMISSION AND EMISSION CONTROLS

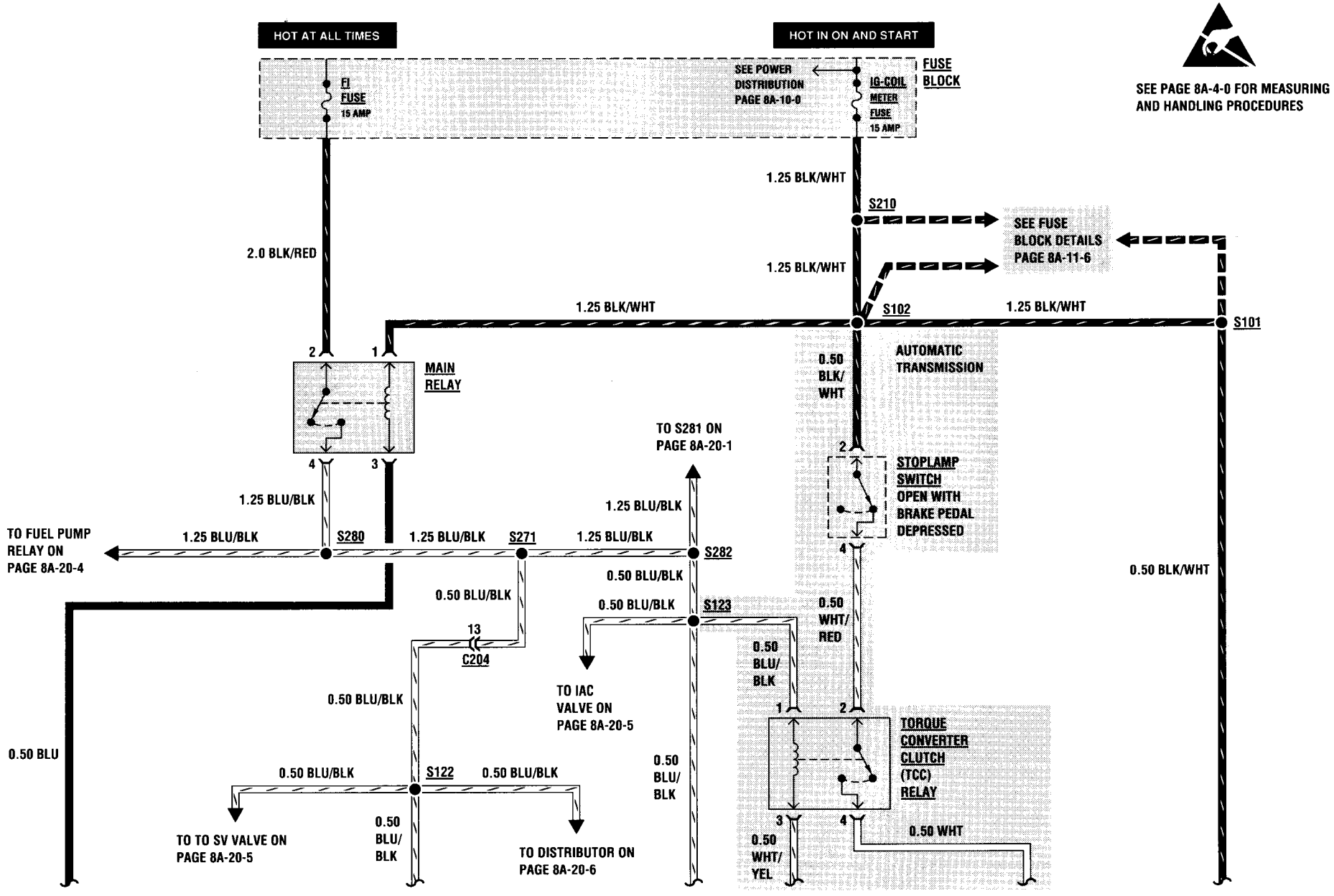

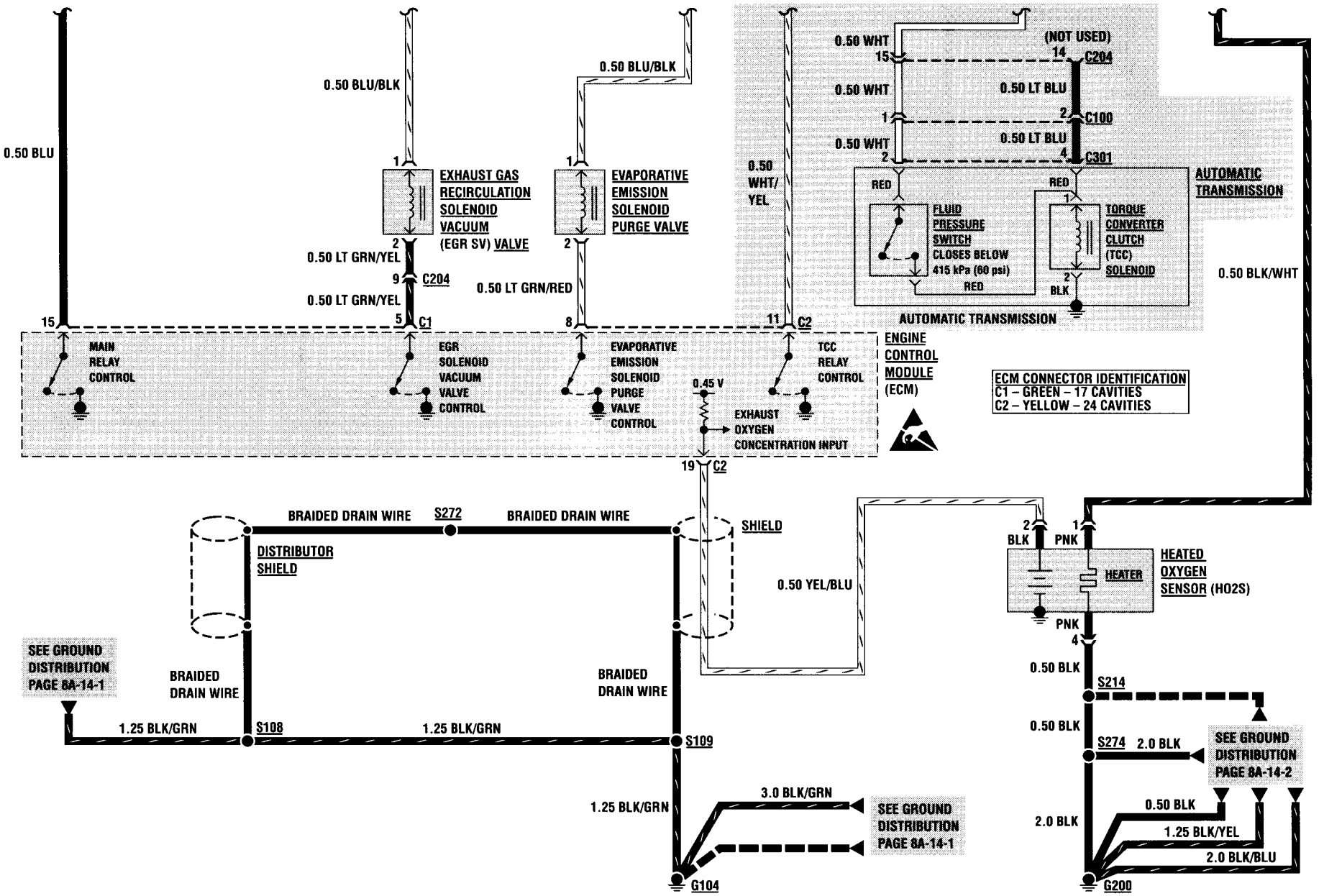
0.50 BLU
0.50 BLU/BLK
0.50 BLU/BLK
EXHAUST GAS RECIRCULATION SOLENOID VACUUM (EGR SV) VALVE
EVAPORATIVE EMISSION SOLENOID PURGE VALVE
0.50 LT GRN/YEL
C204
0.50 LT GRN/YEL
0.50 LT GRN/RED
C1
C2
0.50 WHT/YEL
0.50 WHT
(NOT USED)
C204
0.50 LT BLU
C100
0.50 WHT
0.50 LT BLU
C301
AUTOMATIC TRANSMISSION
RED
FLUID PRESSURE SWITCH CLOSES BELOW 415 kPa (60 psi)
TORQUE CONVERTER CLUTCH (TCC) SOLENOID
BLK
AUTOMATIC TRANSMISSION
0.50 BLK/WHT
MAIN RELAY CONTROL
EGR SOLENOID VACUUM VALVE CONTROL
EVAPORATIVE EMISSION SOLENOID PURGE VALVE CONTROL
0.45 V
EXHAUST OXYGEN CONCENTRATION INPUT
TCC RELAY CONTROL
ENGINE CONTROL MODULE (ECM)
ECM CONNECTOR IDENTIFICATION
C1 – GREEN – 17 CAVITIES
C2 – YELLOW – 24 CAVITIES
BRAIDED DRAIN WIRE
S272
BRAIDED DRAIN WIRE
SHIELD
DISTRIBUTOR SHIELD
0.50 YEL/BLU
BLK
PNK
HEATER
HEATED OXYGEN SENSOR (HO2S)
PNK
0.50 BLK
S214
SEE GROUND DISTRIBUTION PAGE 8A-14-1
BRAIDED DRAIN WIRE
BRAIDED DRAIN WIRE
1.25 BLK/GRN
S108
1.25 BLK/GRN
S109
0.50 BLK
S274
2.0 BLK
SEE GROUND DISTRIBUTION PAGE 8A-14-2
1.25 BLK/GRN
3.0 BLK/GRN
SEE GROUND DISTRIBUTION PAGE 8A-14-1
0.50 BLK
2.0 BLK
1.25 BLK/YEL
2.0 BLK/BLU
G104
G200

ENGINE CONTROLS: 1.6L VIN U

FUEL PUMP AND IDLE SPEED CONTROLS

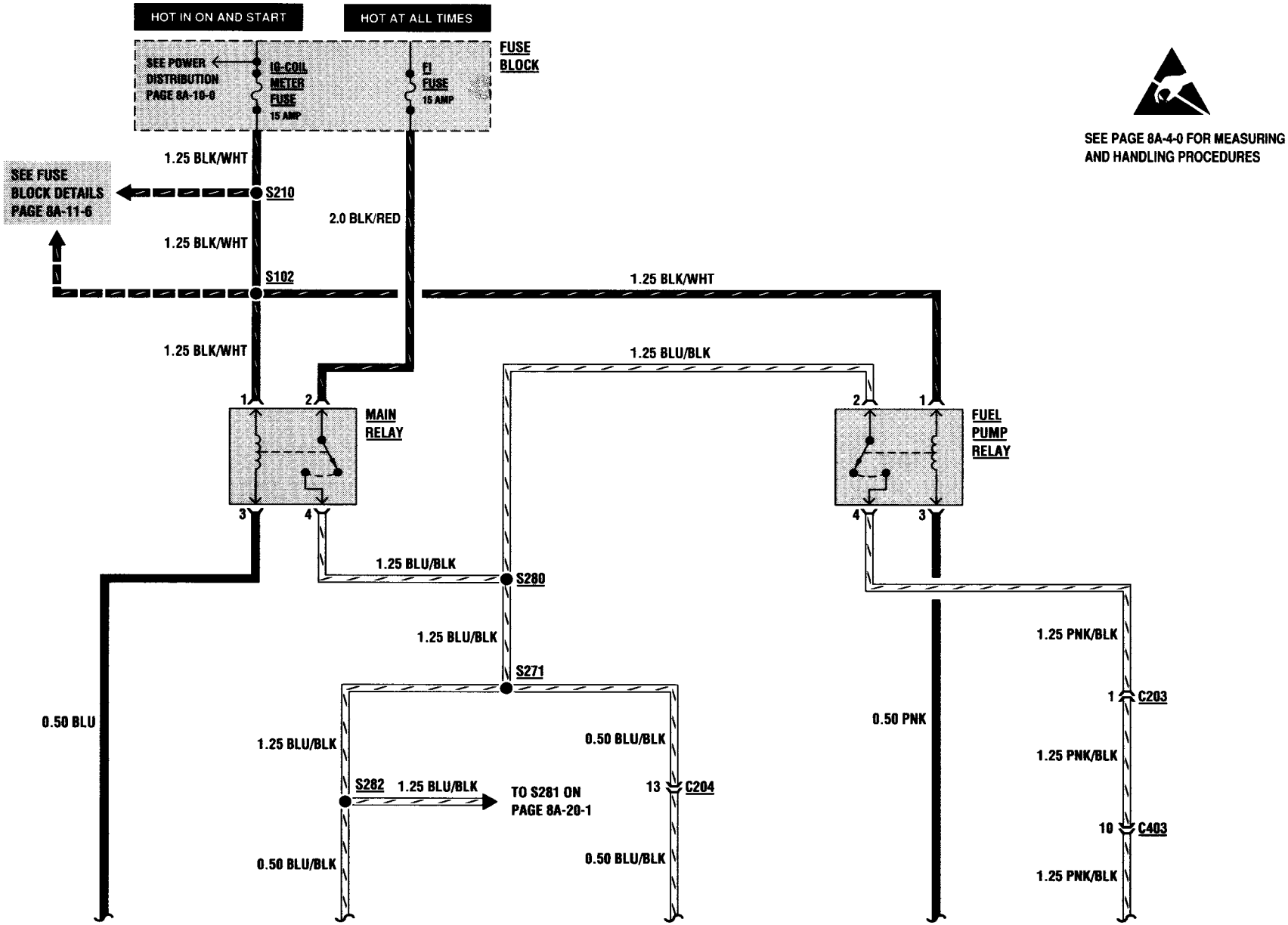

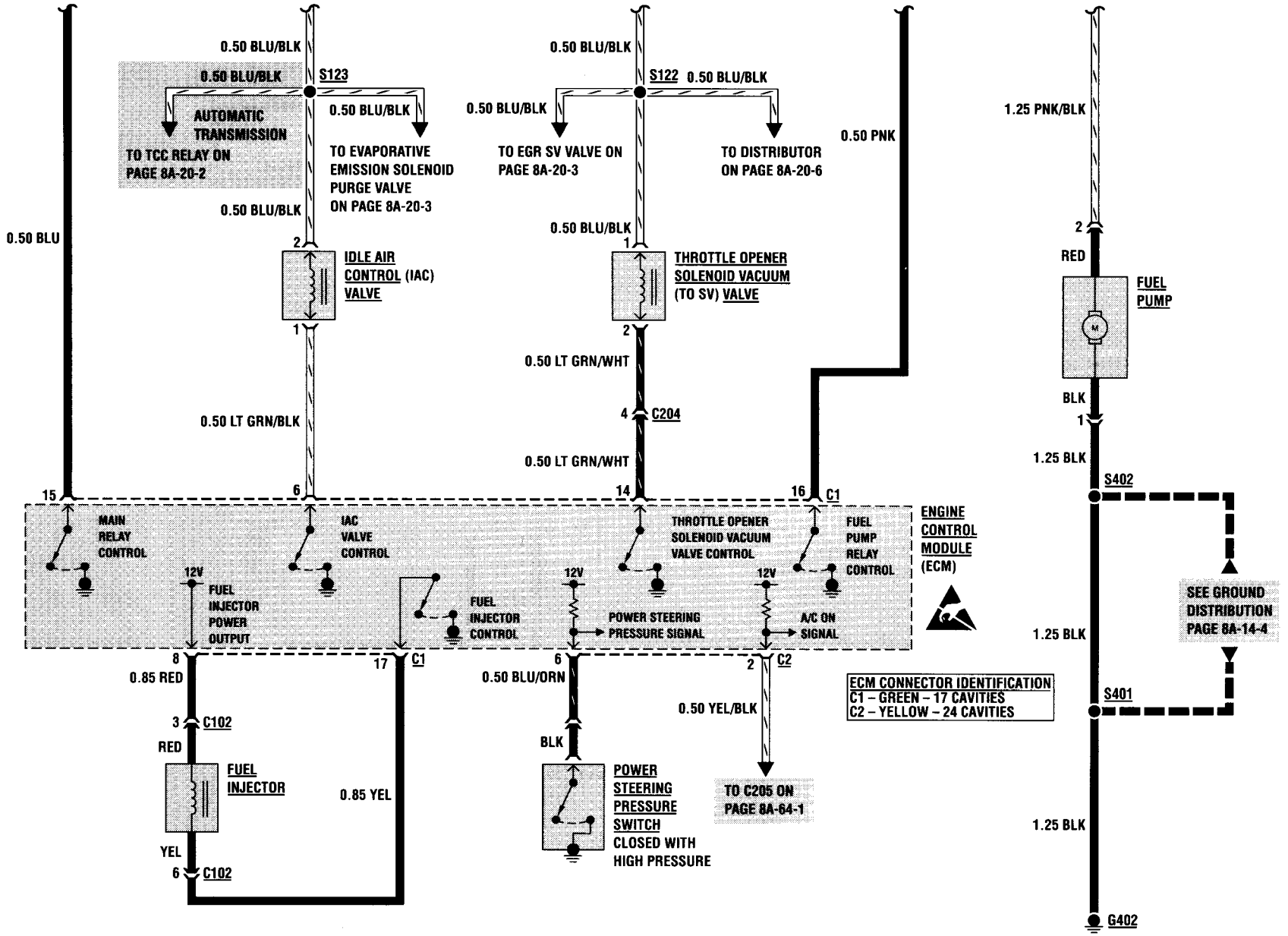
0.50 BLU/BLK
0.50 BLU/BLK
S123
AUTOMATIC TRANSMISSION
TO TCC RELAY ON PAGE 8A-20-2
0.50 BLU/BLK
TO EVAPORATIVE EMISSION SOLENOID PURGE VALVE ON PAGE 8A-20-3
0.50 BLU/BLK
0.50 BLU
2
IDLE AIR CONTROL (IAC) VALVE
1
0.50 LT GRN/BLK
6
0.50 BLU/BLK
S122
0.50 BLU/BLK
0.50 BLU/BLK
TO EGR SV VALVE ON PAGE 8A-20-3
TO DISTRIBUTOR ON PAGE 8A-20-6
0.50 BLU/BLK
1
THROTTLE OPENER SOLENOID VACUUM (TO SV) VALVE
2
0.50 LT GRN/WHT
4
C204
0.50 LT GRN/WHT
14
0.50 PNK
16
C1
1.25 PNK/BLK
2
RED
FUEL PUMP
BLK
1
1.25 BLK
S402
15
MAIN RELAY CONTROL
IAC VALVE CONTROL
THROTTLE OPENER SOLENOID VACUUM VALVE CONTROL
FUEL PUMP RELAY CONTROL
ENGINE CONTROL MODULE (ECM)
12V
FUEL INJECTOR POWER OUTPUT
FUEL INJECTOR CONTROL
12V
POWER STEERING PRESSURE SIGNAL
12V
A/C ON SIGNAL
SEE GROUND DISTRIBUTION PAGE 8A-14-4
1.25 BLK
8
0.85 RED
17
C1
6
0.50 BLU/ORN
2
C2
ECM CONNECTOR IDENTIFICATION
C1 – GREEN – 17 CAVITIES
C2 – YELLOW – 24 CAVITIES
S401
3
C102
RED
FUEL INJECTOR
0.85 YEL
YEL
6
C102
BLK
POWER STEERING PRESSURE SWITCH CLOSED WITH HIGH PRESSURE
0.50 YEL/BLK
TO C205 ON PAGE 8A-64-1
1.25 BLK
1.25 BLK
G402

ENGINE CONTROLS: 1.6L VIN U
IGNITION

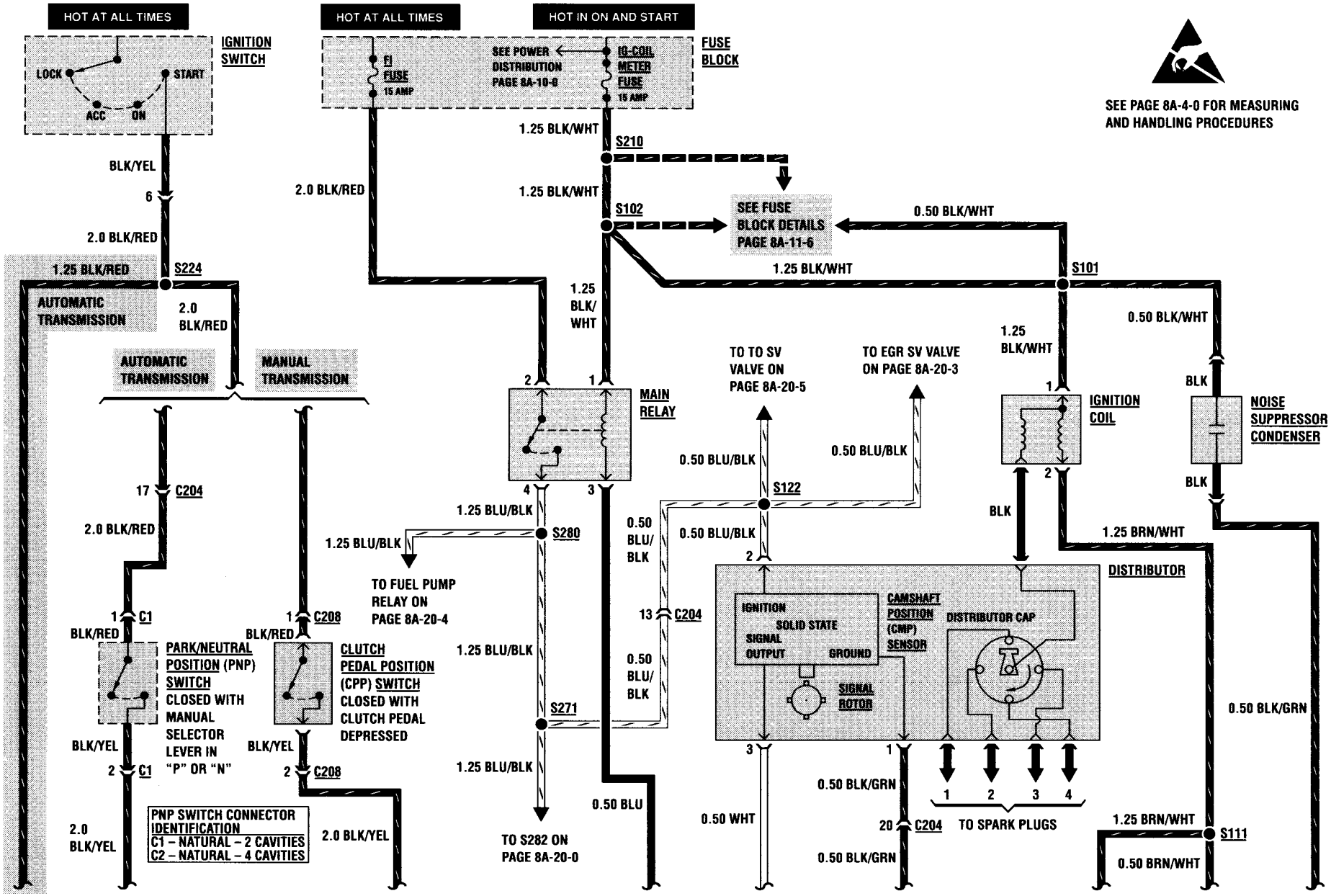

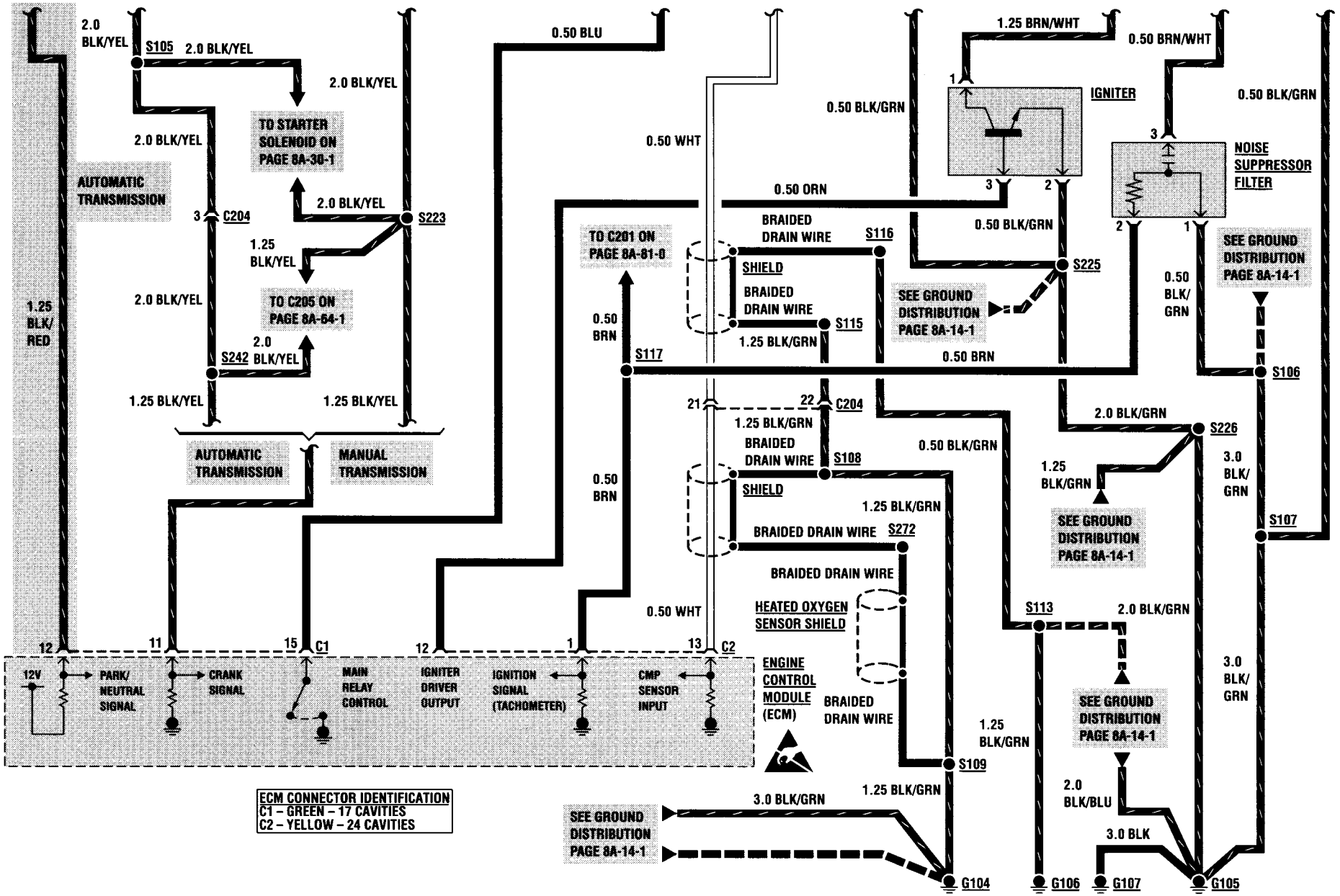
2.0 BLK/YEL
S105
2.0 BLK/YEL
2.0 BLK/YEL
TO STARTER SOLENOID ON PAGE 8A-30-1
2.0 BLK/YEL
AUTOMATIC TRANSMISSION
3
C204
2.0 BLK/YEL
S223
1.25 BLK/YEL
TO C205 ON PAGE 8A-64-1
2.0 BLK/YEL
1.25 BLK/ RED
2.0 BLK/YEL
S242
1.25 BLK/YEL
1.25 BLK/YEL
AUTOMATIC TRANSMISSION
MANUAL TRANSMISSION
0.50 BLU
0.50 WHT
0.50 ORN
TO C201 ON PAGE 8A-81-0
BRAIDED DRAIN WIRE
S116
SHIELD
BRAIDED DRAIN WIRE
S115
1.25 BLK/GRN
0.50 BRN
S117
0.50 BRN
21
22
C204
1.25 BLK/GRN
BRAIDED DRAIN WIRE
S108
SHIELD
1.25 BLK/GRN
BRAIDED DRAIN WIRE
S272
BRAIDED DRAIN WIRE
HEATED OXYGEN SENSOR SHIELD
BRAIDED DRAIN WIRE
0.50 WHT
1.25 BRN/WHT
0.50 BRN/WHT
1
IGNITER
3
2
0.50 BLK/GRN
0.50 BLK/GRN
S225
SEE GROUND DISTRIBUTION PAGE 8A-14-1
0.50 BLK/GRN
3
NOISE SUPPRESSOR FILTER
2
1
SEE GROUND DISTRIBUTION PAGE 8A-14-1
0.50 BLK/ GRN
S106
2.0 BLK/GRN
S226
0.50 BLK/GRN
1.25 BLK/GRN
SEE GROUND DISTRIBUTION PAGE 8A-14-1
3.0 BLK/ GRN
S107
S113
2.0 BLK/GRN
SEE GROUND DISTRIBUTION PAGE 8A-14-1
3.0 BLK/ GRN
1.25 BLK/GRN
S109
1.25 BLK/GRN
2.0 BLK/BLU
3.0 BLK
12
11
15
C1
12
1
13
C2
12V
PARK/ NEUTRAL SIGNAL
CRANK SIGNAL
MAIN RELAY CONTROL
IGNITER DRIVER OUTPUT
IGNITION SIGNAL (TACHOMETER)
CMP SENSOR INPUT
ENGINE CONTROL MODULE (ECM)
ECM CONNECTOR IDENTIFICATION
C1 – GREEN – 17 CAVITIES
C2 – YELLOW – 24 CAVITIES
3.0 BLK/GRN
SEE GROUND DISTRIBUTION PAGE 8A-14-1
G104
G106
G107
G105

ENGINE CONTROLS: 1.6L VIN U

ENGINE AND VEHICLE DATA SENSORS

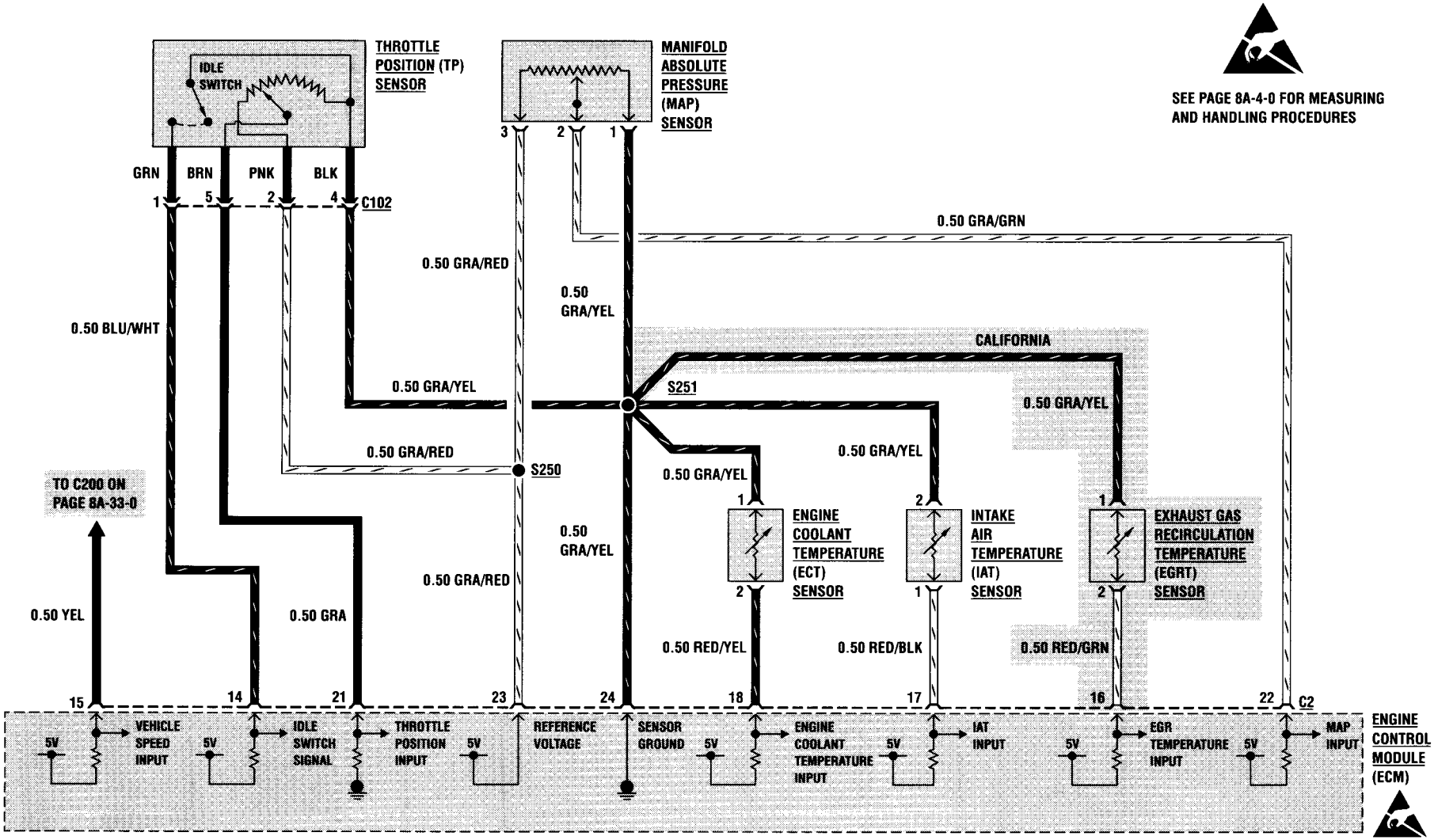

ECM CONNECTOR IDENTIFICATION
C1 – GREEN – 17 CAVITIES
C2 – YELLOW – 24 CAVITIES

ENGINE CONTROLS: 1.6L VIN U

COMPONENT	LOCATION	FIGURE	CONNECTOR
Clutch Pedal Position (CPP) Switch (Manual Transmission)	Behind LH I/P above Clutch Pedal	201-05/A	
Data Link Connector (DLC)	Under LH I/P near Fuse Block		50-02
Distributor	Rear of Engine	201-03/A	202-08/A1
Duty Check Data Link Connector (DLC)	RH Engine Compartment near Fusible Link Box	201-00/B	202-07/B2
Engine Control Module (ECM)	Under LH I/P		
C1 (17 Cavities)	Main Harness to ECM, behind I/P left of Steering Column	201-05/A	20-13
C2 (24 Cavities)	Main Harness to ECM, behind I/P left of Steering Column	201-05/A	20-14
Engine Coolant Temperature (ECT) Sensor	RH side of Engine on Intake Manifold	201-04/A	
Evaporative Emission Solenoid Purge Valve	RH Engine Compartment below Thermostat Housing	201-04/A	
Exhaust Gas Recirculation Solenoid Vacuum (EGR SV) Valve	In Engine Compartment near Valve Cover	201-04/A	
Exhaust Gas Recirculation Temperature (EGRT) Sensor (California)	RH Rear Engine Compartment near Battery	201-00/B	
Fluid Pressure Switch (Automatic Transmission)	Inside Transmission, attached to Valve Body		
Fuel Injector	Top of Throttle Body	201-04/A	
Fuel Pump	In Fuel Tank	201-08/A	
Fuel Pump Relay	Under LH I/P mounted to ECM	201-05/A	202-06/C2
Fuse Block	Under I/P left of Steering Column	201-05/A	
Heated Oxygen Sensor (HO2S)	LH side of Engine in Exhaust Manifold	201-03/A	202-08/A2
Idle Air Control (IAC) Valve	On RH side of Throttle Body	201-04/A	
Igniter	LH Rear Engine Compartment on Bulkhead	201-03/A	
Ignition Coil	LH Rear Engine Compartment on Bulkhead	201-03/A	
Ignition Switch	On Steering Column	201-05/A	202-06/C1
Instrument Panel Cluster Assembly	LH I/P	201-06/A	
C1 (12 Terminals)	I/P Harness to I/P Cluster Assembly, behind I/P Cluster Assembly	201-06/A	81-08
C2 (10 Terminals)	I/P Harness to I/P Cluster Assembly, behind I/P Cluster Assembly	201-06/A	81-08
C3 (5 Cavities) (Federal)	MIL Cancel Switch to I/P Cluster Assembly, behind I/P Cluster Assembly	201-06/A	81-09
Intake Air Temperature (IAT) Sensor	RH Front Engine below Throttle Body	201-04/A	
Main Relay	Under LH I/P mounted to ECM	201-05/A	202-07/C3
Malfunction Indicator Lamp (MIL) Cancel Switch (Federal)	Attached to LH Front Speaker	201-06/A	
Manifold Absolute Pressure (MAP) Sensor	RH Rear Engine Compartment on Bulkhead	201-00/B	

ENGINE CONTROLS: 1.6L VIN U

COMPONENT	LOCATION	FIGURE	CONNECTOR
Noise Suppressor Condenser	LH Rear Engine Compartment above Ignition Coil	201-03/A	
Noise Suppressor Filter	LH Rear Engine Compartment below Front Wiper Motor	201-03/A	
Park/Neutral Position (PNP) Switch			
(Automatic Transmission)	RH side of Transmission	201-11/A	
C1 (2 Cavities)	Engine Harness to Park/Neutral Position (PNP) Switch, rear of Engine		
Power Steering Pressure Switch	In Power Steering Pump, lower LH Engine	201-12/A	
Rear Wheel Antilock (RWAL) Brake			
Data Link Connector (DLC)	Under LH I/P near Fuse Block		44-05
Stoplamp Switch	Under LH I/P above Brake Pedal		
	(Manual Transmission)	201-05/A	
	(Automatic Transmission)	201-05/A	202-07/C3
Throttle Opener Solenoid Vacuum (TO SV) Valve	In Engine Compartment near Valve Cover	201-04/A	
Throttle Position (TP) Sensor	On Throttle Body	201-04/A	
Torque Converter Clutch (TCC) Relay			
(Automatic Transmission)	RH Engine Compartment on Fusible Link Box	201-01/A	202-06/C2
Torque Converter Clutch (TCC) Solenoid			
(Automatic Transmission)	In Transmission, attached to Valve Body		
C100 (6 Cavities)	Engine Harness to Transmission Harness, RH rear side of Engine	201-04/A	202-07/A2
C102 (6 Cavities)	Main Harness to Fuel Injector and Throttle Position (TP) Sensor,		
	RH Front of Engine	201-04/A	202-07/A2
C200 (22 Cavities)	I/P Harness to Main Harness, behind I/P left of Steering Column	201-05/A	202-01/A1
C201 (10 Cavities)	I/P Harness to Main Harness, behind I/P left of Steering Column	201-05/A	202-02/A1
C203 (8 Cavities)	Main Harness to Floor Harness 1,		
	behind I/P left of Steering Column	201-05/A	202-07/C2
C204 (22 Cavities)	Main Harness to Engine Harness,		
	behind I/P left of Steering Column	201-05/A	202-04/A1
C206 (10 Cavities)	Main Harness to DLC and RWAL Brake DLC,		
	below LH I/P near Fuse Box	201-05/A	202-05/A1
C208 (2 Cavities) (Manual Transmission)	Main Harness to Clutch Pedal Position (CPP) Switch Jumper,		
	behind LH I/P above Clutch Pedal	201-05/A	
C301 (4 Cavities) (Automatic Transmission)	Transmission Harness to Transmission Jumper Harness,		
	LH side of Transmission	201-11/A	202-06/A1
C403 (12 Cavities)	Floor Harness 1 to Rear Lamp Harness,		
	behind LH Rear Wheelhousing	201-08/A	202-05/A2
S101	Main Harness, at Bulkhead near Front Wiper Motor	201-03/A	

ENGINE CONTROLS: 1.6L VIN U

COMPONENT	LOCATION	FIGURE	CONNECTOR
S102	Main Harness, at Bulkhead near Front Wiper Motor	201-03/A	
S105 (Automatic Transmission)	Engine Harness, at Bulkhead near Distributor	201-03/A	
S106	Main Harness, at Bulkhead near Ignition Coil	201-03/A	
S107	Main Harness, at Bulkhead near Ignition Coil	201-03/A	
S108	Main Harness, RH Engine Compartment near Battery	201-01/A	
S109	Main Harness, at Bulkhead near Front Wiper Motor	201-03/A	
S111	Main Harness, LH Rear Engine Compartment near Bulkhead Grommet	201-03/A	
S113	Engine Harness, RH Engine Compartment above Starter Motor	201-04/A	
S115	Engine Harness, at Bulkhead near Grommet	201-03/A	
S116	Engine Harness, in Distributor Branch		
S117	Main Harness, at Bulkhead near Front Wiper Motor	201-03/A	
S122	Engine Harness, RH side of Engine	201-04/A	
S123	Main Harness, RH Rear Engine Compartment near Battery	201-01/A	
S201	Main Harness, behind I/P left of Steering Column	201-05/A	
S210	Main Harness, behind LH I/P near Fuse Block	201-05/A	
S211	I/P Harness, behind I/P near LH Front Speaker	201-06/A	
S214	Main Harness, behind I/P left of Steering Column	201-05/A	
S220	Main Harness, behind I/P left of Steering Column	201-05/A	
S222	Main Harness, behind Center I/P near Blower Speed Selector Switch	201-05/A	
S223 (Manual Transmission)	Main Harness, behind LH I/P near Fuse Block	201-05/A	
S224 (Automatic Transmission)	Main Harness, behind I/P left of Steering Column	201-05/A	
S225	Main Harness, behind LH I/P near ECM	201-05/A	
S226	Main Harness, behind LH I/P near ECM	201-05/A	
S227	I/P Harness, behind Center I/P near Radio	201-06/A	
S230 (Canada)	Main Harness, behind I/P left of Steering Column	201-05/A	
S242 (Automatic Transmission)	Main Harness, behind I/P left of Steering Column	201-05/A	
S250	Main Harness, behind RH I/P near Bulkhead Grommet	201-05/A	
S251	Main Harness, behind RH I/P near Bulkhead Grommet	201-05/A	
S271	Main Harness, behind LH I/P near Fuse Block	201-05/A	
S272	Main Harness, behind LH I/P near ECM	201-05/A	
S274	Main Harness, behind LH I/P near ECM	201-05/A	
S279	Main Harness, behind LH I/P near ECM	201-05/A	
S280	Main Harness, behind LH I/P near ECM	201-05/A	

ENGINE CONTROLS: 1.6L VIN U

COMPONENT	LOCATION	FIGURE	CONNECTOR
S281	Main Harness, behind LH I/P near ECM	201-05/A	
S282	Main Harness, behind I/P left of Steering Column	201-05/A	
S401	Rear Lamp Harness, near LH Rear Combination Lamp	201-08/A	
S402	Rear Lamp Harness, near RH Rear Combination Lamp	201-08/A	
G104	LH Rear Engine Compartment on LH side of Bulkhead	201-03/A	
G105	Rear of Engine near Distributor	201-03/A	
G106	Front of Engine above Generator	201-04/A	
G107	On Bulkhead, behind Distributor	201-03/A	
G200	Behind LH I/P above Fuse Block	201-05/A	
G201	Behind RH I/P near Blower Assembly	201-05/A	
G402	Behind LH Rear Wheelhousing	201-08/A	

SYSTEM DIAGNOSIS

For system diagnosis, diagnostic trouble codes (DTCs) and service information regarding the Engine Control System, refer to SECTION 6E.

ENGINE CONTROL MODULE (ECM) CONNECTOR: C1

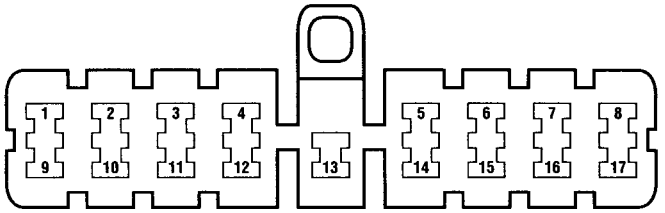

GREEN

WIRING DETAIL LEGEND

CAVITY	WIRE COLOR	CIRCUIT
1	BLU/BLK	Ignition Power Input
2	BLK/GRN	ECM Ground – G105/G107
3	—	Not Used
4	—	Not Used
5	LT GRN/YEL	EGR Solenoid Vacuum Valve Control
6	LT GRN/BLK	IAC Valve Control
7	BLU/BLK	Ignition Power Input
8	RED	Fuel Injector Power Output
9	WHT	Memory Power Input
10	BLK/BLU	ECM Ground – G105/G107
11	BLK/YEL	Crank Signal
12	BLK/RED	Park/Neutral Signal (Automatic Transmission)
13	PPL/YEL	Malfunction Indicator Lamp Control
14	LT GRN/WHT	Throttle Opener Solenoid Vacuum Valve Control
15	BLU	Main Relay Control
16	PNK	Fuel Pump Relay Control
17	YEL	Fuel Injector Control

ENGINE CONTROL MODULE (ECM) CONNECTOR: C2

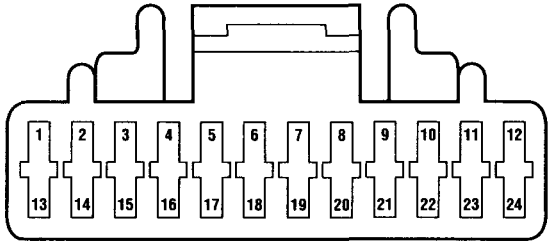

YELLOW

WIRING DETAIL LEGEND

CAVITY	WIRE COLOR	CIRCUIT
1	BRN	Ignition Signal (Tachometer)
2	YEL/BLK	A/C On Signal
3	BLU/YEL	Diagnostic Request Signal
4	BLK/GRN	Ground Signal (California)
5	—	Not Used
6	BLU/ORN	Power Steering Pressure Signal
7	BLU/RED	Test Switch Signal
8	LT GRN/RED	Evaporative Emission Solenoid Purge Valve Control
9	PPL	Duty Check Output
10	—	Not Used
11	WHT/YEL	TCC Relay Control (Automatic Transmission)
12	ORN	Igniter Driver Output

WIRING DETAIL LEGEND (CONT'D)

CAVITY	WIRE COLOR	CIRCUIT
13	WHT	CMP Sensor Input
14	BLU/WHT	Idle Switch Signal
15	YEL	Vehicle Speed Input
16	RED/GRN	EGR Temperature Input (California)
17	RED/BLK	IAT Input
18	RED/YEL	Engine Coolant Temperature Input
19	YEL/BLU	Exhaust Oxygen Concentration Input
20	PPL/GRN	Serial Data Output
21	GRA	Throttle Position Input
22	GRA/GRN	MAP Input
23	GRA/RED	Reference Voltage (5V)
24	GRA/YEL	Sensor Ground

BLANK

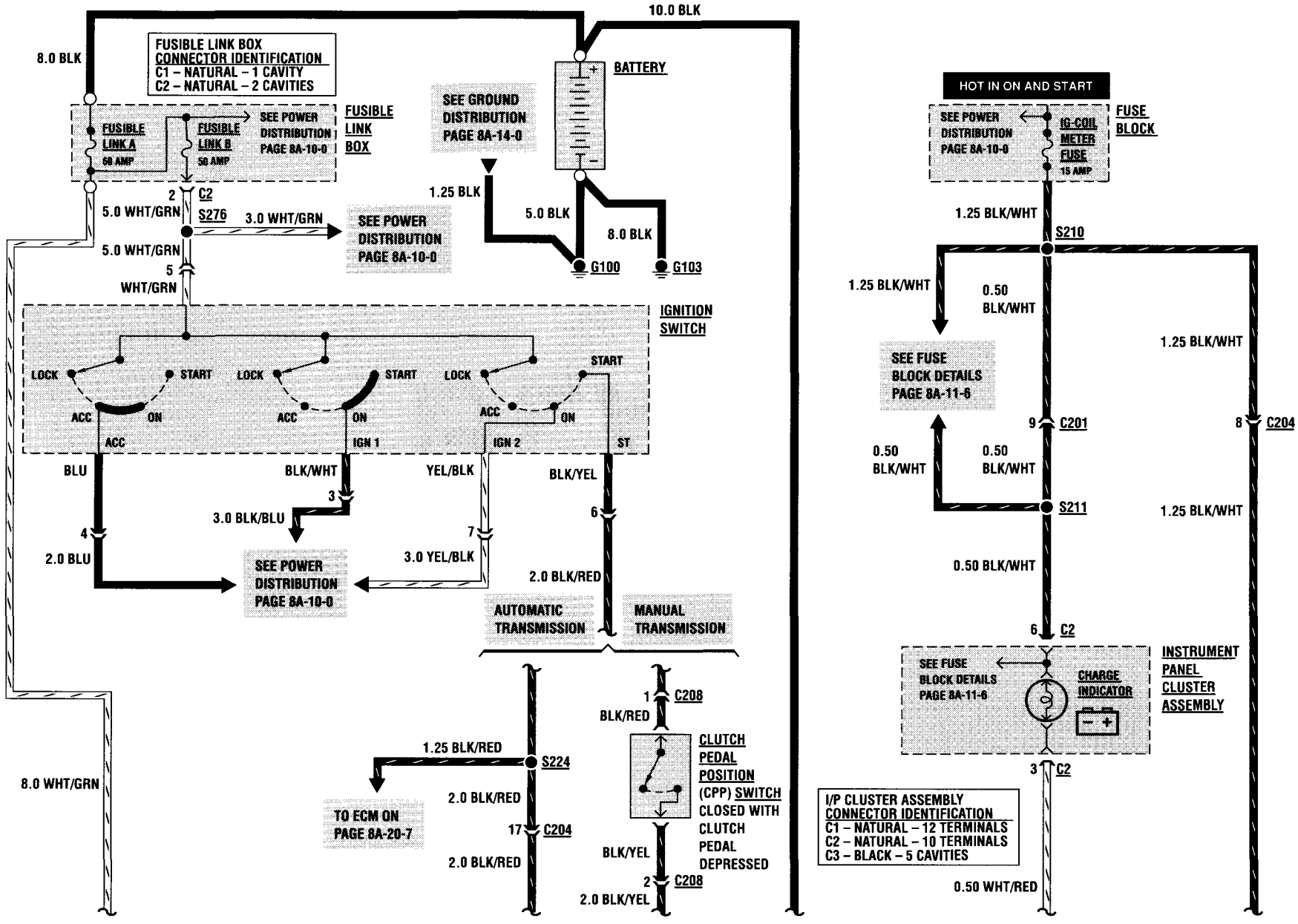
FUSIBLE LINK BOX
CONNECTOR IDENTIFICATION
C1 – NATURAL – 1 CAVITY
C2 – NATURAL – 2 CAVITIES
8.0 BLK
FUSIBLE LINK A
60 AMP
FUSIBLE LINK B
50 AMP
SEE POWER DISTRIBUTION PAGE 8A-10-0
FUSIBLE LINK BOX
2
C2
S276
5.0 WHT/GRN
3.0 WHT/GRN
SEE POWER DISTRIBUTION PAGE 8A-10-0
5.0 WHT/GRN
5
WHT/GRN
10.0 BLK
BATTERY
SEE GROUND DISTRIBUTION PAGE 8A-14-0
1.25 BLK
5.0 BLK
8.0 BLK
G100
G103
IGNITION SWITCH
LOCK
START
ACC
ON
ACC
IGN 1
IGN 2
ST
BLU
BLK/WHT
YEL/BLK
BLK/YEL
3
3.0 BLK/BLU
4
2.0 BLU
7
3.0 YEL/BLK
6
2.0 BLK/RED
SEE POWER DISTRIBUTION PAGE 8A-10-0
AUTOMATIC TRANSMISSION
MANUAL TRANSMISSION
1
C208
BLK/RED
CLUTCH PEDAL POSITION (CPP) SWITCH CLOSED WITH CLUTCH PEDAL DEPRESSED
1.25 BLK/RED
S224
2.0 BLK/RED
TO ECM ON PAGE 8A-20-7
17
C204
2.0 BLK/RED
BLK/YEL
2
C208
2.0 BLK/YEL
8.0 WHT/GRN
HOT IN ON AND START
SEE POWER DISTRIBUTION PAGE 8A-10-0
IG-COIL METER FUSE
15 AMP
FUSE BLOCK
1.25 BLK/WHT
S210
1.25 BLK/WHT
0.50 BLK/WHT
SEE FUSE BLOCK DETAILS PAGE 8A-11-6
1.25 BLK/WHT
9
C201
8
C204
0.50 BLK/WHT
0.50 BLK/WHT
S211
1.25 BLK/WHT
0.50 BLK/WHT
6
C2
SEE FUSE BLOCK DETAILS PAGE 8A-11-6
CHARGE INDICATOR
INSTRUMENT PANEL CLUSTER ASSEMBLY
3
C2
I/P CLUSTER ASSEMBLY
CONNECTOR IDENTIFICATION
C1 – NATURAL – 12 TERMINALS
C2 – NATURAL – 10 TERMINALS
C3 – BLACK – 5 CAVITIES
0.50 WHT/RED

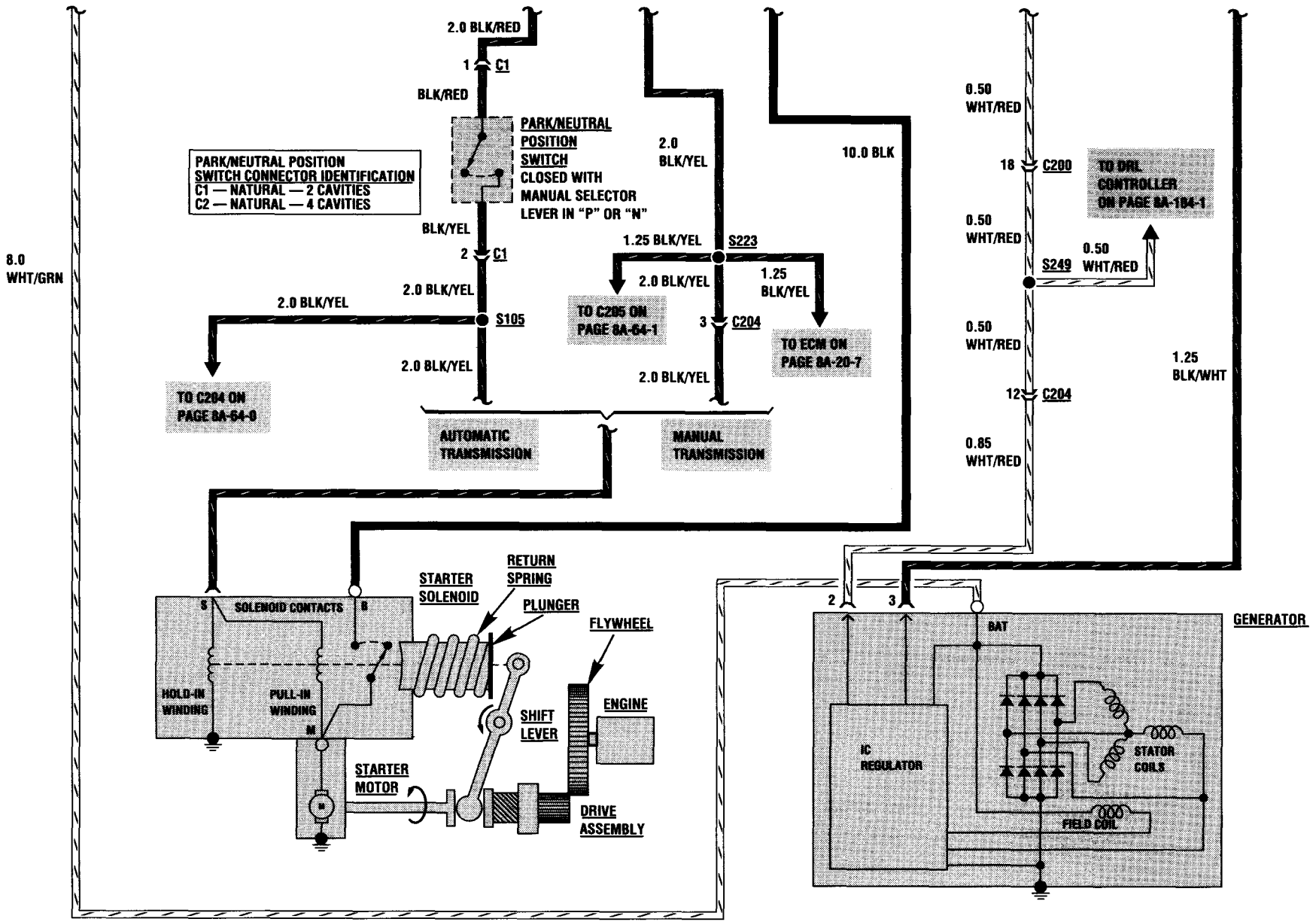
2.0 BLK/RED
1 C1
BLK/RED
PARK/NEUTRAL POSITION SWITCH CLOSED WITH MANUAL SELECTOR LEVER IN "P" OR "N"
PARK/NEUTRAL POSITION SWITCH CONNECTOR IDENTIFICATION
C1 — NATURAL — 2 CAVITIES
C2 — NATURAL — 4 CAVITIES
BLK/YEL
2 C1
2.0 BLK/YEL
S105
2.0 BLK/YEL
TO C204 ON PAGE 8A-64-9
2.0 BLK/YEL
2.0 BLK/YEL
1.25 BLK/YEL
S223
2.0 BLK/YEL
TO C205 ON PAGE 8A-64-1
1.25 BLK/YEL
3 C204
TO ECM ON PAGE 8A-20-7
2.0 BLK/YEL
10.0 BLK
8.0 WHT/GRN
AUTOMATIC TRANSMISSION
MANUAL TRANSMISSION
0.50 WHT/RED
18 C200
TO DRL CONTROLLER ON PAGE 8A-184-1
0.50 WHT/RED
S249
0.50 WHT/RED
0.50 WHT/RED
12 C204
0.85 WHT/RED
1.25 BLK/WHT
S
SOLENOID CONTACTS
B
HOLD-IN WINDING
PULL-IN WINDING
M
STARTER SOLENOID
RETURN SPRING
PLUNGER
FLYWHEEL
ENGINE
SHIFT LEVER
STARTER MOTOR
DRIVE ASSEMBLY
2
3
BAT
GENERATOR
IC REGULATOR
STATOR COILS
FIELD COIL

STARTER AND CHARGING

COMPONENT	LOCATION	FIGURE	CONNECTOR
Battery	RH Rear Engine Compartment behind Strut Tower	201-00/B	
Clutch Pedal Position (CPP) Switch (Manual Transmission)	Behind LH I/P above Clutch Pedal	201-05/A	
Fuse Block	Under I/P left of Steering Column	201-05/A	
Fusible Link Box	RH Engine Compartment on Inner Fender	201-00/B	
C2 (2 Cavities)	Main Harness to Fusible Link Box, below box		
Generator	RH front of Engine	201-04/A	
Ignition Switch	On Steering Column	201-05/A	202-06/C1
Instrument Panel Cluster Assembly	LH I/P	201-06/A	
C2 (10 Terminals)	I/P Harness to I/P Cluster Assembly, behind I/P Cluster Assembly	201-06/A	81-08
Park/Neutral Position Switch (Automatic Transmission)	RH side of Transmission	201-11/A	
C1 (2 Cavities)	Engine Harness to Park/Neutral Position Switch, rear of Engine		
Starter Solenoid	On lower RH side of Engine, on Starter	201-04/A	
C200 (22 Cavities)	I/P Harness to Main Harness, behind I/P left of Steering Column	201-05/A	202-01/A1
C201 (10 Cavities)	I/P Harness to Main Harness, behind I/P left of Steering Column	201-05/A	202-02/A1
C204 (22 Cavities)	Main Harness to Engine Harness, behind I/P left of Steering Column	201-05/A	202-04/A1
C208 (2 Cavities) (Manual Transmission)	Main Harness to Clutch Pedal Position Switch Jumper, behind LH I/P above Clutch Pedal	201-05/A	
S105 (Automatic Transmission)	Engine Harness, at Bulkhead near Distributor	201-03/A	
S210	Main Harness, behind LH I/P near Fuse Block	201-05/A	
S211	I/P Harness, behind I/P near LH Front Speaker	201-06/A	
S223 (Manual Transmission)	Main Harness, behind LH I/P near Fuse Block	201-05/A	
S224 (Automatic Transmission)	Main Harness, behind I/P left of Steering Column	201-05/A	
S249 (Canada)	Main Harness, behind I/P left of Steering Column	201-05/A	
S276	Main Harness, behind I/P left of Steering Column	201-05/A	
G100	RH Rear Engine Compartment near Battery	201-01/A	
G103	RH Rear Engine Compartment above Starter	201-04/A	

STARTER AND CHARGING

TROUBLESHOOTING HINTS

1. Check Fusible Links A and B using a test lamp.
2. Check the IG-COIL METER Fuse with a fuse tester.
3. Check the hydrometer eye that is built into the BATTERY before troubleshooting the Starter or Charging System.
   - Green Eye – BATTERY is charged.
   - Dark Eye – BATTERY is discharged. Recharge the BATTERY.
   - Clear or Yellow Eye – BATTERY fluid is low. Replace the BATTERY.
4. Check the BATTERY for overcharge conditions such as spewing of electrolyte or yellowing of the BATTERY case. If any of these conditions are present, refer to SECTION 6D1.
5. Check that all STARTER assembly connections are clean and tight.
6. Check that G100 and G103 are clean and tight.

SYSTEM DIAGNOSIS

STARTER SYSTEM — **DIAGNOSTIC CHART A**

	TEST	RESULT	ACTION
A1.	Turn IGNITION SWITCH to "START."	ENGINE does not crank and STARTER SOLENOID does not click.	GO TO **A2**.
		ENGINE does not crank or cranks slowly and STARTER SOLENOID clicks.	GO TO **A10.**
A2.	Connect a test lamp from STARTER SOLENOID terminal S to chassis ground. Press clutch pedal if vehicle is equipped with manual transmission. Turn IGNITION SWITCH to "START."	Test lamp lights.	Replace STARTER SOLENOID.
		Test lamp does not light.	GO TO **A3** with Manual Transmission. GO TO **A7** with Automatic Transmission.
A3.	Backprobe CLUTCH PEDAL POSITION (CPP) SWITCH connector (C208) with a test lamp from cavity 2 to chassis ground. Turn IGNITION SWITCH to "START" and depress clutch pedal.	Test lamp lights.	Repair open in BLK/YEL wire between CPP SWITCH and STARTER SOLENOID.
		Test lamp does not light.	GO TO **A4.**
A4.	Backprobe CPP SWITCH connector (C208) with a test lamp from cavity 1 to chassis ground. Turn IGNITION SWITCH to "START."	Test lamp lights.	Replace CPP SWITCH.
		Test lamp does not light.	GO TO **A5.**
A5.	Backprobe IGNITION SWITCH connector with a test lamp from cavity 6 to chassis ground. Turn IGNITION SWITCH to "START."	Test lamp lights.	Repair open in BLK/RED wire between CPP SWITCH and IGNITION SWITCH.
		Test lamp does not light.	GO TO **A6.**

SYSTEM DIAGNOSIS

STARTER SYSTEM — **DIAGNOSTIC CHART A (CONT'D)**

	TEST	RESULT	ACTION
A6.	Backprobe IGNITION SWITCH connector with a test lamp from cavity 5 to chassis ground.	Test lamp does not light.	Repair open in WHT/GRN wire between FUSIBLE LINK BOX and IGNITION SWITCH.
		Test lamp lights.	Replace IGNITION SWITCH.
A7.	Backprobe PARK/NEUTRAL POSITION SWITCH connector C1 with a test lamp from cavity 2 to chassis ground. Turn IGNITION SWITCH to "START."	Test lamp lights.	Repair open in BLK/YEL wire between PARK/NEUTRAL POSITION SWITCH and STARTER SOLENOID.
		Test lamp does not light.	GO TO **A8.**
A8.	Backprobe PARK/NEUTRAL POSITION SWITCH connector C1 with a test lamp from cavity 1 to chassis ground. Turn IGNITION SWITCH to "START."	Test lamp lights.	Replace PARK/NEUTRAL POSITION SWITCH.
		Test lamp does not light.	GO TO **A9.**
A9.	Backprobe IGNITION SWITCH connector with a test lamp from cavity 6 to chassis ground. Turn IGNITION SWITCH to "START."	Test lamp lights.	Repair open in BLK/RED wire between IGNITION SWITCH and PARK/NEUTRAL POSITION SWITCH.
		Test lamp does not light.	GO TO **A6.**
A10.	Using a digital multimeter, measure voltage across BATTERY terminals with IGNITION SWITCH in "START."	Less than 9.6 volts.	GO TO **A11.**
		More than 9.6 volts.	GO TO **A12.**
A11.	Perform Battery Load Test. Refer to SECTION 6D1.	BATTERY defective.	Replace BATTERY.
		BATTERY good.	Repair/replace STARTER.
A12.	Using a digital multimeter, measure voltage drop between battery negative (-) post and engine block and then between BATTERY positive (+) post and STARTER SOLENOID terminal S while cranking the engine.	Voltage drop through either battery cable more than 0.5 volts.	Check for poor connection at BATTERY and STARTER SOLENOID. If OK, replace battery cables.
		Voltage drop through both battery cables less than 0.5 volts.	Repair/replace STARTER.

STARTER AND CHARGING

SYSTEM DIAGNOSIS

CHARGING SYSTEM	DIAGNOSTIC CHART B	
NOTE: BATTERY MUST BE IN CHARGED STATE BEFORE CONTINUING DIAGNOSIS.		
TEST	**RESULT**	**ACTION**
B1. Turn IGNITION SWITCH to "ON."	Charge Indicator lights.	GO TO **B2.**
	Charge Indicator does not light.	GO TO **B4.**
B2. Start engine.	Charge Indicator goes out.	GO TO **B3.**
	Charge Indicator remains lit.	GO TO **B7.**
B3. Using a digital multimeter, measure voltage across BATTERY terminals with engine running at fast idle.	Voltage between 13.5 and 15.5 volts.	All systems diagnosed in this cell are functioning normally.
	Voltage less than 13.5 or more than 15.5 volts.	Remove GENERATOR and replace IC Regulator.
B4. Remove GENERATOR connector. Connect a fused jumper from GENERATOR connector cavity 2 to chassis ground.	Charge Indicator lights.	GO TO **B5.**
	Charge Indicator does not light.	GO TO **B6.**
B5. Connect a test lamp from GENERATOR connector cavity 3 to chassis ground. Turn IGNITION SWITCH to "ON."	Test lamp lights.	Remove GENERATOR and replace IC Regulator.
	Test lamp does not light.	Repair open in BLK/WHT wire between FUSE BLOCK and GENERATOR.
B6. Backprobe INSTRUMENT PANEL CLUSTER ASSEMBLY connector C2 with a test lamp from terminal 6 to chassis ground.	Test lamp does not light.	Repair open in BLK/WHT wire between INSTRUMENT PANEL CLUSTER ASSEMBLY and FUSE BLOCK.
	Test lamp lights.	Check INSTRUMENT PANEL CLUSTER printed circuit for opens. If OK, repair open in WHT/RED wire.
B7. Turn IGNITION SWITCH to "OFF." Remove GENERATOR connector. Turn IGNITION SWITCH to "ON."	Charge Indicator remains lit.	Repair short to ground in WHT/RED wire.
	Charge Indicator goes out.	Remove GENERATOR and check IC Regulator.

STARTER AND CHARGING

For component replacement procedures, refer to the section listed below.

COMPONENT	SECTION
Battery	Section 6D1
Battery Cables	Section 6D1
Clutch Pedal Position (CPP) Switch	Section 7C
Generator	Section 6D3
Ignition Switch (without tilt wheel)	Section 3F1
Ignition Switch (with tilt wheel)	Section 3F2
Instrument Panel Cluster Printed Circuit	Section 8C
Park/Neutral Position Switch	Section 7A
Starter Solenoid	Section 6D2

CIRCUIT OPERATION

STARTER SYSTEM

With the ignition key in the "START" position, BATTERY voltage is transferred through the IGNITION SWITCH to the CLUTCH PEDAL POSITION (CPP) SWITCH or the PARK/NEUTRAL POSITION SWITCH. The CPP SWITCH is used on those vehicles equipped with a manual transmission while the PARK/NEUTRAL POSITION SWITCH is used on those vehicles equipped with an automatic transmission. When the clutch pedal is depressed, the CPP SWITCH is closed and BATTERY voltage is applied to the STARTER SOLENOID windings. When the manual selector is in either "P" or "N," the PARK/NEUTRAL POSITION SWITCH is closed and BATTERY voltage is transferred to the STARTER SOLENOID windings. In each case, this causes the SHIFT LEVER to push out the DRIVE ASSEMBLY, engaging it with the FLYWHEEL. This action will also cause the contacts in the STARTER SOLENOID to close, providing voltage to the STARTER MOTOR.

Once the ENGINE starts, an override mechanism allows the DRIVE ASSEMBLY to turn at the same speed as the FLYWHEEL. Once the ignition key is released, placing the IGNITION SWITCH in the "ON" position, the windings in the STARTER SOLENOID are de-energized and the RETURN SPRING returns the DRIVE ASSEMBLY to its original position and opens the contacts.

CHARGING SYSTEM

The GENERATOR provides DC voltage to operate the vehicle's electrical systems and to recharge the BATTERY. The voltage output of the GENERATOR is controlled by a built-in IC Regulator.

When the IGNITION SWITCH is moved to "ON," BATTERY voltage is applied through the IG-COIL METER Fuse and the Charge Indicator to the IC Regulator in the GENERATOR. When the GENERATOR is not rotating, the IC Regulator provides a ground and causes the Charge Indicator to light.

AC voltage is generated in three Stator Coils. This AC voltage is converted to DC voltage in the Rectifier Bridge. The DC output is applied to the vehicle's BATTERY and electrical supply circuits at the "BAT" terminal of the GENERATOR. A separate output voltage is provided to the Charge Indicator. Since equal voltage is now being applied to both sides of the Charge Indicator, the lamp loses its ground and goes out.

The IC Regulator is also connected to battery voltage through the GENERATOR "BAT" terminal. When the BATTERY is fully charged, the IC Regulator senses this and reduces the output of the GENERATOR, preventing an overcharge condition. When the BATTERY is drained, the IC Regulator senses the low voltage and increases the output of the GENERATOR.

BLANK

COOLANT FAN
A/C CONDENSER FAN

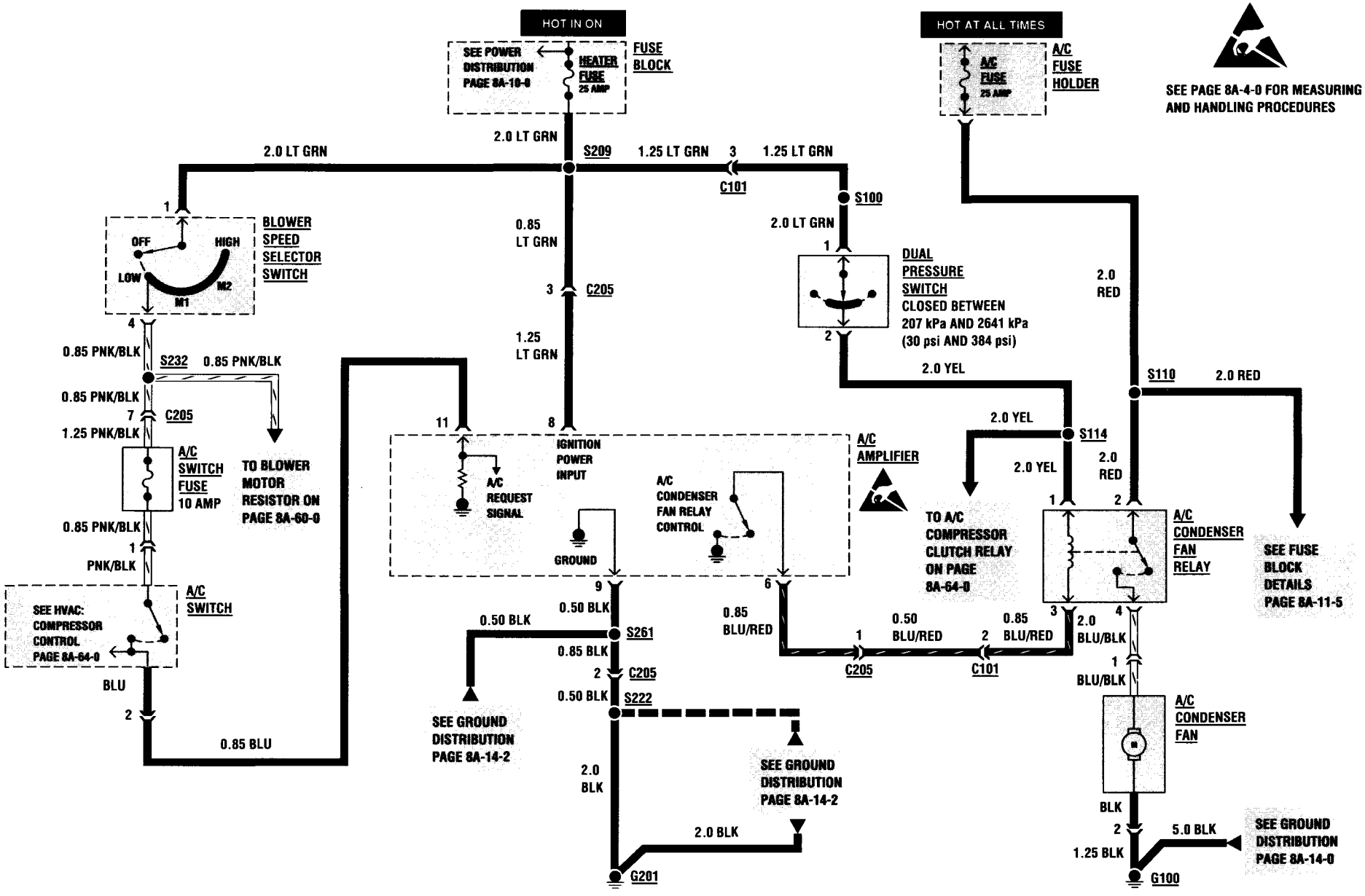

COOLANT FAN

COMPONENT	LOCATION	FIGURE	CONNECTOR
A/C Amplifier	Behind RH I/P on Evaporator	201-05/A	64-10
A/C Condenser Fan	Between Grille and Radiator	201-02/A	
A/C Condenser Fan Relay	RH Engine Compartment near Fusible Link Box	201-02/A	202-07/C3
A/C Fuse Holder	RH Engine Compartment attached to A/C Compressor Clutch Relay	201-02/A	
A/C Switch	Center of I/P above Radio	201-05/A	
A/C Switch Fuse	Behind Center I/P	201-05/A	
Blower Speed Selector Switch	Center of I/P above Radio	201-05/A	202-07/B3
Dual Pressure Switch	RH Front Engine Compartment behind Radiator	201-02/A	
Fuse Block	Under I/P left of Steering Column	201-05/A	
C101 (4 Cavities)	Main Harness to Outer A/C Harness, RH Rear Engine Compartment near Battery	201-00/A	202-06/B3
C205 (10 Cavities)	Main Harness to Inner A/C Harness, behind I/P right of Radio	201-05/A	202-02/A2
S100	Outer A/C Harness, RH Engine Compartment near Strut Tower	201-01/A	
S110	Outer A/C Harness, RH Engine Compartment near Strut Tower	201-01/A	
S114	Outer A/C Harness, RH Engine Compartment, on top of Strut Tower	201-01/A	
S209	Main Harness, behind Center I/P near Blower Speed Selector Switch	201-05/A	
S222	Main Harness, behind Center I/P near Blower Speed Selector Switch	201-05/A	
S232	Main Harness, behind Center I/P near Blower Speed Selector Switch	201-05/A	
S261	Inner A/C Harness, behind RH I/P near A/C Amplifier	201-05/A	
G100	RH Rear Engine Compartment near Battery	201-01/A	
G201	Behind RH I/P near Blower Assembly	201-05/A	

TROUBLESHOOTING HINTS

1. Check the HEATER Fuse with a fuse tester.
2. Check the A/C Fuse with a fuse tester.
3. Check that the A/C Fusible Link is not damaged or open.
4. Check that grounds G100 and G201 are clean and tight.
5. Before diagnosing suspected A/C Condenser Fan problems, be sure that the A/C Compressor Clutch engages when the A/C SWITCH is pushed to ON and the BLOWER SPEED SELECTOR SWITCH is in any position but "OFF." If the A/C Compressor Clutch does not engage as it should, refer to System Diagnosis in Cell 64.
6. Check that the A/C system has a proper charge of refrigerant. Refer to SECTION 1B.

COOLANT FAN

SYSTEM DIAGNOSIS

COOLANT FAN: A/C CONDENSER FAN — DIAGNOSTIC CHART A

	TEST	RESULT	ACTION
A1.	Turn ignition switch to "ON." Press A/C SWITCH ON. Move BLOWER SPEED SELECTOR SWITCH to any position except "OFF."	A/C CONDENSER FAN operates.	GO TO **A2.**
		A/C CONDENSER FAN does not operate.	GO TO **A3.**
A2.	Press A/C Switch OFF and move BLOWER SPEED SELECTOR SWITCH to "OFF."	A/C CONDENSER FAN stops.	All systems diagnosed in this cell are functioning normally.
		A/C CONDENSER FAN continues to operate.	GO TO **A8.**
A3.	Disconnect A/C CONDENSER FAN connector. Connect a test lamp from connector cavity 1 to cavity 2.	Test lamp lights.	Replace A/C CONDENSER FAN.
		Test lamp does not light.	GO TO **A4.**
A4.	Connect a test lamp from A/C CONDENSER FAN connector cavity 1 to chassis ground.	Test lamp lights.	Repair BLK ground wire between A/C CONDENSER FAN and G100.
		Test lamp does not light.	GO TO **A5.**
A5.	Backprobe A/C CONDENSER FAN RELAY connector with a test lamp from cavity 4 to chassis ground.	Test lamp lights.	Repair open in BLU/BLK wire.
		Test lamp does not light.	GO TO **A6.**
A6.	Disconnect A/C CONDENSER FAN RELAY connector. Connect a test lamp from connector cavity 3 to B+.	Test lamp lights.	Check for an open in YEL or RED wires to A/C CONDENSER FAN RELAY. If OK, replace A/C CONDENSER FAN RELAY.
		Test lamp does not light.	GO TO **A7.**
A7.	Backprobe A/C AMPLIFIER connector with a test lamp from cavity 6 to B+.	Test lamp does not light.	Replace A/C AMPLIFIER.
		Test lamp lights.	Repair open in BLU/RED wire.
A8.	Disconnect A/C CONDENSER FAN RELAY connector.	A/C CONDENSER FAN continues to operate.	Repair short to voltage in BLU/BLK wire.
		A/C CONDENSER FAN stops.	GO TO **A9.**
A9.	Connect a test lamp from A/C CONDENSER FAN RELAY connector cavity 3 to B+.	Test lamp does not light.	Replace A/C CONDENSER FAN RELAY.
		Test lamp lights.	Check for a short to ground in BLU/RED wire. If OK, replace A/C AMPLIFIER.

COOLANT FAN

For component replacement procedures, refer to the section listed below.

COMPONENT	SECTION
A/C Amplifier	Section 1B
A/C Condenser Fan	Section 1B
A/C Condenser Fan Relay	Section 1B

CIRCUIT OPERATION

With the Ignition Switch in the "ON" position, system voltage is applied to the DUAL PRESSURE SWITCH through the HEATER Fuse. The DUAL PRESSURE SWITCH closes when the pressure in the A/C system is between 207 kPa (30 psi) and 2641 kPa (384 psi). Voltage is then provided to the A/C CONDENSER FAN RELAY coil.

The A/C CONDENSER FAN RELAY coil is grounded by the A/C AMPLIFIER, provided the A/C AMPLIFIER has not received a low temperature signal from the Evaporator Thermistor.

When the relay is energized through the DUAL PRESSURE SWITCH, battery voltage is applied to the A/C CONDENSER FAN through the A/C Fuse and the contacts of the relay. Since the A/C CONDENSER FAN is permanently grounded at G100, the coolant fan operates as long as the relay is energized.

The A/C AMPLIFIER monitors the Evaporator Thermistor mounted inside the evaporator housing. The Evaporator Thermistor converts evaporator core temperature into a resistance value. Using this resistance value, the A/C AMPLIFIER can sense when evaporator temperature drops below 0°C (32° F). When this occurs, the A/C AMPLIFIER removes the A/C CONDENSER FAN RELAY coil ground (as well as the A/C Clutch Relay coil ground). This prevents evaporator frost and ice-up which reduces air flow and reduces the unit's cooling capacity.

Whenever the pressure in the A/C system drops below 207 kPa (30 psi) or rises above 2641 kPa (384 psi), the DUAL PRESSURE SWITCH opens, the A/C CONDENSER FAN RELAY is de-energized, and voltage to the A/C CONDENSER FAN is interrupted.

VEHICLE SPEED SENSOR

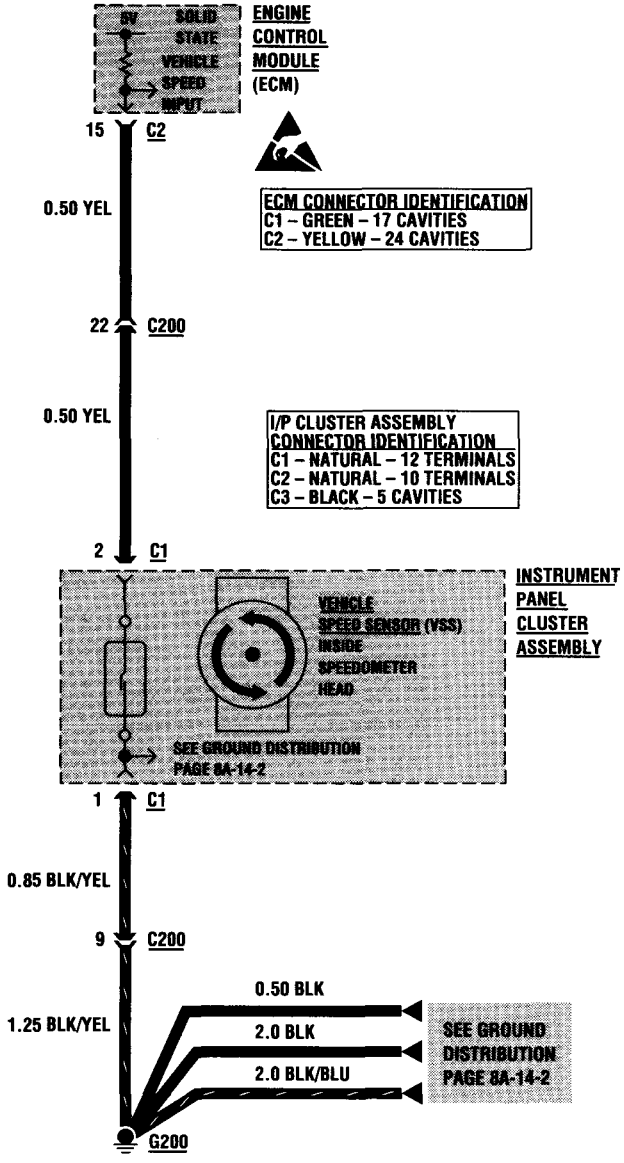

SEE PAGE 8A-4-0 FOR MEASURING AND HANDLING PROCEDURES

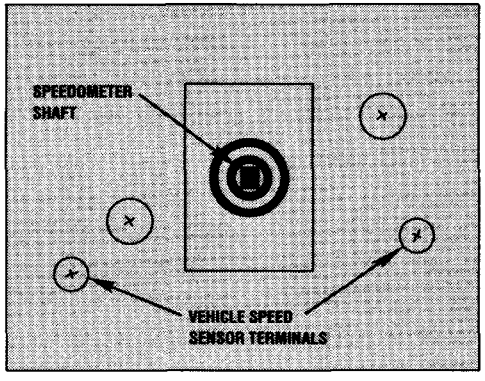

INSTRUMENT PANEL CLUSTER ASSEMBLY DETAIL (BACK VIEW)

VEHICLE SPEED SENSOR

COMPONENT	LOCATION	FIGURE	CONNECTOR
Engine Control Module (ECM)	Under LH I/P		
C2 (24 Cavities)	Main Harness to ECM, behind I/P left of Steering Column	201-05/A	20-14
Instrument Panel Cluster Assembly	LH I/P	201-06/A	
C1 (12 Terminals)	I/P Harness to I/P Cluster Assembly, behind I/P Cluster Assembly	201-06/A	81-08
C200 (22 Cavities)	I/P Harness to Main Harness, behind I/P left of Steering Column	201-06/A	202-01/A1
G200	Behind LH I/P above Fuse Block	201-05/A	

SYSTEM DIAGNOSIS

For diagnosis of the Vehicle Speed Sensor (VSS), refer to SECTION 6E.

HORN

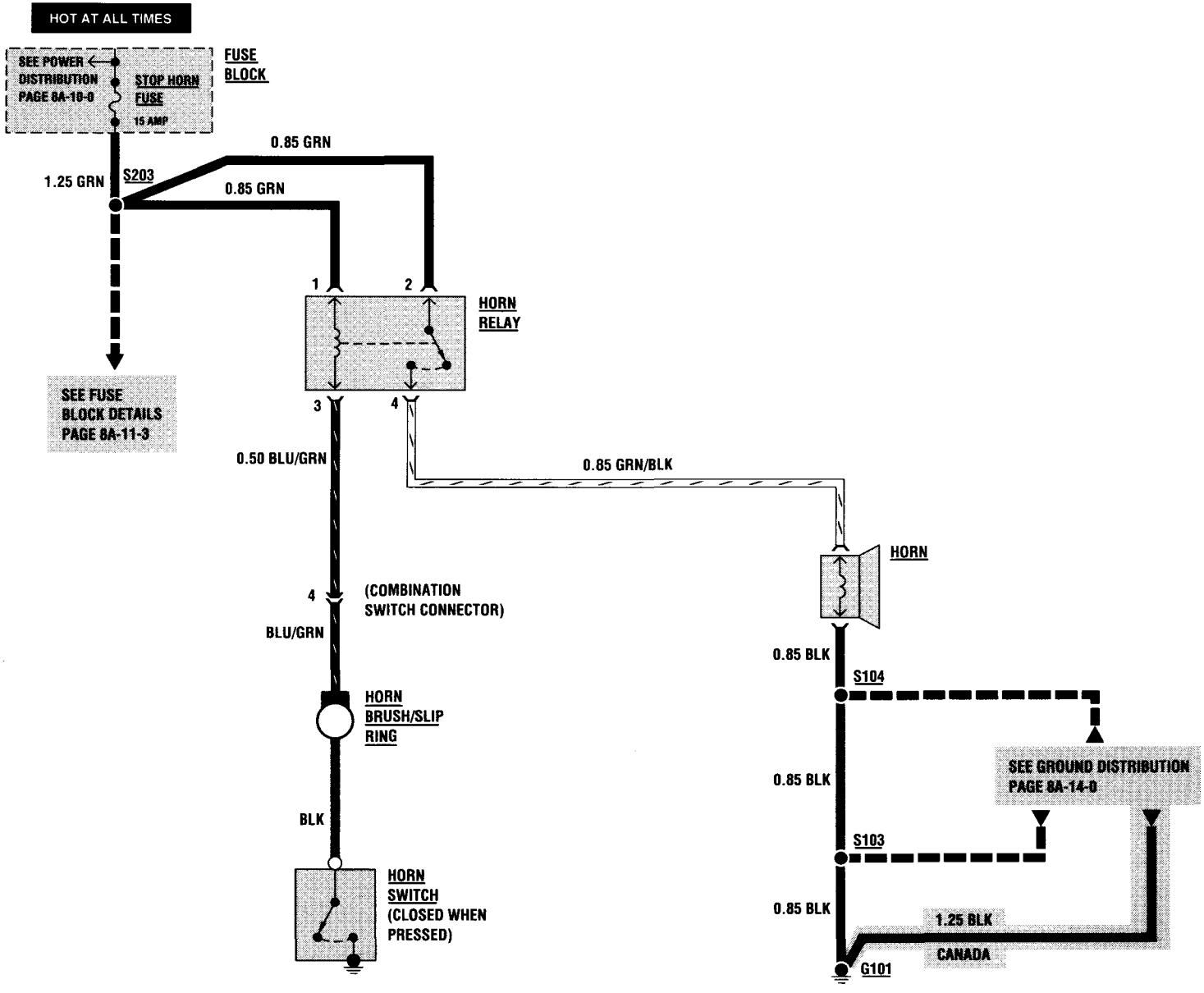
HOT AT ALL TIMES
SEE POWER DISTRIBUTION PAGE 8A-10-0
STOP HORN FUSE
15 AMP
FUSE BLOCK
0.85 GRN
1.25 GRN
S203
0.85 GRN
1
2
HORN RELAY
3
4
SEE FUSE BLOCK DETAILS PAGE 8A-11-3
0.50 BLU/GRN
0.85 GRN/BLK
HORN
4
(COMBINATION SWITCH CONNECTOR)
BLU/GRN
0.85 BLK
S104
HORN BRUSH/SLIP RING
SEE GROUND DISTRIBUTION PAGE 8A-14-0
0.85 BLK
BLK
S103
HORN SWITCH (CLOSED WHEN PRESSED)
0.85 BLK
1.25 BLK
CANADA
G101

HORN

COMPONENT	LOCATION	FIGURE	CONNECTOR
Fuse Block	Under I/P left of Steering Column	201-05/A	
Horn	Behind RH side of Grille	201-01/A	
Horn Brush/Slip Ring	In Steering Column attached to Combination Switch		
Horn Relay	Under LH I/P mounted to ECM	201-05/A	202-06/B1
Horn Switch	On Steering Wheel Center Pad		
S103	Main Harness, behind RH Headlamp	201-01/A	
S104	Main Harness, behind RH Headlamp	201-01/A	
S203	Main Harness, behind I/P left of Steering Column	201-05/A	
G101	RH Front Engine Compartment near Washer Fluid Reservoir	201-01/A	

TROUBLESHOOTING HINTS

1. Check the STOP HORN Fuse by observing stoplamp operation.
2. Check that the HORN RELAY connector is securely attached to the HORN RELAY.
3. Check that G101 is clean and tight.

SYSTEM DIAGNOSIS

HORN	DIAGNOSTIC CHART A		
	TEST	RESULT	ACTION
A1.	Press and release HORN SWITCH.	HORN sounds and stops.	All systems diagnosed in this cell are functioning normally.
		HORN does not sound.	GO TO **A2.**
		HORN does not stop.	GO TO **A9.**
A2.	Disconnect HORN RELAY connector. Connect a fused jumper across HORN RELAY connector cavities 2 and 4.	HORN sounds.	Remove jumper and GO TO **A3.**
		HORN does not sound.	GO TO **A6.**
A3.	Connect a digital multimeter from HORN RELAY connector cavity 3 to chassis ground. Measure resistance while pressing HORN SWITCH.	Less than 1.0 ohm.	GO TO **A4.**
		More than 1.0 ohm.	GO TO **A5.**

SYSTEM DIAGNOSIS

HORN	DIAGNOSTIC CHART A (CONT'D)		
	TEST	RESULT	ACTION
A4.	Connect a test lamp from HORN RELAY connector cavity 1 to chassis ground.	Test lamp lights.	Replace HORN RELAY.
		Test lamp does not light.	Repair open in GRN wire between S203 and HORN RELAY connector cavity 1.
A5.	Backprobe Combination Switch connector with a digital multimeter from cavity 4 to chassis ground. Measure resistance while pressing HORN SWITCH.	Less than 1.0 ohm.	Repair open in BLU/GRN wire between HORN RELAY and Combination Switch connector.
		More than 1.0 ohm.	Check for an open in BLU/GRN or BLK wire between HORN SWITCH and Combination Switch connector. If OK, replace HORN SWITCH.
A6.	Disconnect HORN connectors. Connect a test lamp from HORN connector (GRN/BLK wire) to chassis ground.	Test lamp lights.	GO TO **A7.**
		Test lamp does not light.	Remove jumper and GO TO **A8.**
A7.	Connect a digital multimeter from HORN connector (BLK wire) to chassis ground. Measure resistance.	More than 1.0 ohm.	Repair BLK ground wire.
		Less than 1.0 ohm.	Replace HORN.
A8.	Connect a digital multimeter from HORN RELAY connector cavity 4 to HORN connector (GRN/BLK wire). Measure resistance.	More than 1.0 ohm.	Repair open in GRN/BLK wire.
		Less than 1.0 ohm.	Repair open in GRN wire between FUSE BLOCK and HORN RELAY connector cavity 2.
A9.	Disconnect HORN RELAY connector.	HORN continues to sound.	Repair short to voltage in GRN/BLK wire.
		HORN stops.	GO TO **A10.**
A10.	Connect a digital multimeter from HORN RELAY connector cavity 3 to chassis ground. Measure resistance.	Less than infinite.	Check for a short to ground in BLU/GRN wire or BLK wire between HORN RELAY and HORN SWITCH. If OK, replace HORN SWITCH.
		Infinite.	Replace HORN RELAY.

For component replacement procedures, refer to the section listed below.

COMPONENT	SECTION
Horn	Section 8B

HORN

CIRCUIT OPERATION

Battery voltage is applied to the HORN RELAY at all times through the STOP HORN Fuse. When the HORN SWITCH is pressed, the HORN RELAY coil is grounded. This action energizes the HORN RELAY, the relay contacts close and voltage is applied to the HORN. Since the HORN is permanently grounded at G101, the HORN will continue to sound as long as the HORN SWITCH is pressed.

BRAKE WARNING

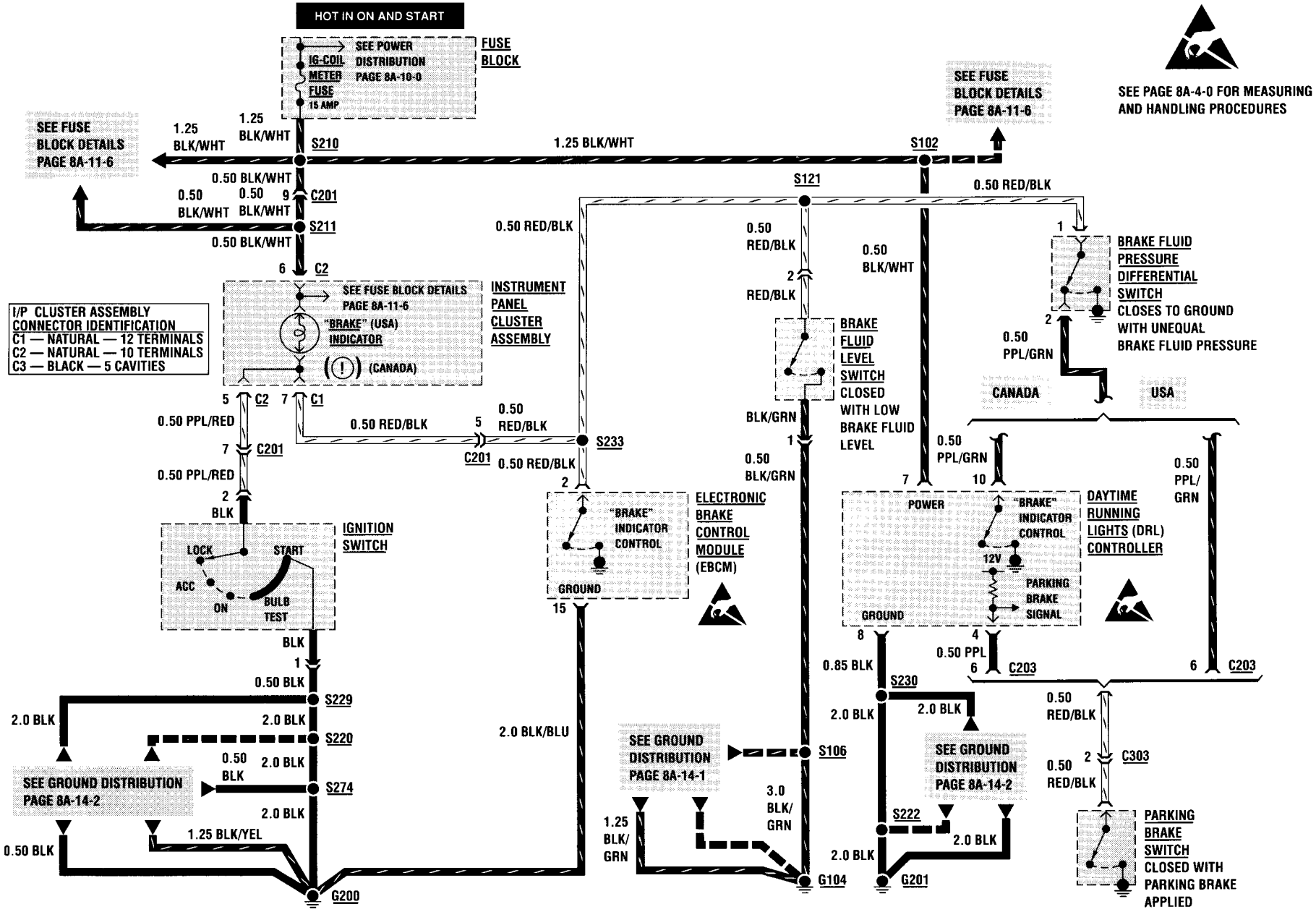

BRAKE WARNING

COMPONENT	LOCATION	FIGURE	CONNECTOR
Brake Fluid Level Switch	LH rear of Engine Compartment on Brake Fluid Reservoir	201-03/A	
Brake Fluid Pressure Differential Switch	LH Rear Engine Compartment near Strut Tower	201-03/A	
Daytime Running Lights (DRL) Controller (Canada)	Behind I/P left of Steering Column	201-05/A	102-08
Electronic Brake Control Module (EBCM)	Under LH I/P near Fuse Block	201-05/A	44-04
Fuse Block	Under I/P left of Steering Column	201-05/A	
Ignition Switch	On Steering Column	201-05/A	202-06/C1
Instrument Panel Cluster Assembly	LH I/P	201-06/A	
C1 (12 Terminals)	I/P Harness to I/P Cluster Assembly, behind I/P Cluster Assembly	201-06/A	81-08
C2 (10 Terminals)	I/P Harness to I/P Cluster Assembly, behind I/P Cluster Assembly	201-06/A	81-08
Parking Brake Switch	Front Passenger Compartment between seats	201-07/A	
C201 (10 Cavities)	I/P Harness to Main Harness, behind I/P left of Steering Column	201-05/A	202-02/A1
C203 (8 Cavities)	Main Harness to Floor Harness 1, behind I/P left of Steering Column	201-05/A	202-07/C2
C303 (4 Cavities)	Floor Harness 1 to Floor Harness 2, behind LH rear Passenger Compartment Trim Panel	201-07/A	202-06/B3
S102	Main Harness, at Bulkhead near Front Wiper Motor	201-03/A	
S106	Main Harness, at Bulkhead near Ignition Coil	201-03/A	
S121	Main Harness, LH Rear Engine Compartment near Bulkhead Grommet	201-03/A	
S210	Main Harness, behind LH I/P near Fuse Block	201-05/A	
S211	I/P Harness, behind I/P near LH Front Speaker	201-06/A	
S220	Main Harness, behind I/P left of Steering Column	201-05/A	
S222	Main Harness, behind Center I/P near Blower Speed Selector Switch	201-05/A	
S229	Main Harness, behind I/P left of Steering Column	201-05/A	
S230 (Canada)	Main Harness, behind I/P left of Steering Column	201-05/A	
S233	Main Harness, behind I/P near LH Front Speaker	201-06/A	
S274	Main Harness, behind LH I/P near ECM	201-05/A	
G104	LH Rear Engine Compartment on Bulkhead	201-03/A	
G200	Behind LH I/P above Fuse Block	201-05/A	
G201	Behind RH I/P near Blower Assembly	201-05/A	

BRAKE WARNING

TROUBLESHOOTING HINTS

1. Check the IG-COIL METER Fuse by starting the vehicle.
2. Check that the brake fluid level is adequate.
3. Check that the parking brake is fully released.
4. Check that the brake pipes and hoses are securely fastened and not leaking.
5. Check that grounds G104, G200 and G201 are clean and tight.

SYSTEM DIAGNOSIS

BRAKE WARNING	DIAGNOSTIC CHART A		
	TEST	RESULT	ACTION
A1.	Turn IGNITION SWITCH to "ON."	Brake Indicator does not light.	GO TO **A2.**
		Brake Indicator lights.	GO TO **A5.**
A2.	Remove brake fluid reservoir cap and strainer. Manually hold down reservoir float.	Brake Indicator lights.	GO TO **A3.**
		Brake Indicator does not light.	GO TO **A16.**
A3.	Reinstall strainer and cap. Engage Parking Brake.	Brake Indicator lights.	GO TO **A4.**
		Brake Indicator does not light.	GO TO **A20.**
A4.	Release Parking Brake. Turn IGNITION SWITCH to BULB TEST.	Brake Indicator lights.	All systems diagnosed in this cell are functioning normally.
		Brake Indicator does not light.	GO TO **A27.**
A5.	Disconnect PARKING BRAKE SWITCH connector.	Brake Indicator goes out.	Replace PARKING BRAKE SWITCH.
		Brake Indicator remains lit.	CANADA – GO TO **A6.** USA – GO TO **A10.**
A6.	Disconnect DAYTIME RUNNING LIGHTS (DRL) CONTROLLER connector.	Brake Indicator goes out.	GO TO **A7.**
		Brake Indicator remains lit.	GO TO **A10.**
A7.	Connect a digital multimeter from DRL CONTROLLER connector cavity 4 to chassis ground. Measure resistance.	Less than infinite.	Repair short to ground in PPL or RED/BLK wire between DRL CONTROLLER and PARKING BRAKE SWITCH.
		Infinite.	GO TO **A8.**

BRAKE WARNING

SYSTEM DIAGNOSIS

BRAKE WARNING	DIAGNOSTIC CHART A (CONT'D)		
	TEST	RESULT	ACTION
A8.	Connect a digital multimeter from DRL CONTROLLER connector cavity 8 to chassis ground. Measure resistance.	More than 3.0 ohms.	Repair BLK ground wire between DRL CONTROLLER and G201.
		Less than 3.0 ohms.	GO TO **A9.**
A9.	Connect a test lamp from DRL CONTROLLER connector cavity 7 to chassis ground.	Test lamp does not light.	Repair open in BLK/WHT wire between DRL CONTROLLER and S210.
		Test lamp lights.	Replace DRL CONTROLLER.
A10.	Disconnect BRAKE FLUID PRESSURE DIFFERENTIAL SWITCH connector.	Brake Indicator goes out.	GO TO **A11.**
		Brake Indicator remains lit.	GO TO **A12.**
A11.	Connect a digital multimeter from BRAKE FLUID PRESSURE DIFFERENTIAL SWITCH connector terminal 2 to chassis ground. Measure resistance.	Less than infinite.	CANADA – Repair short to ground in PPL/GRN wire. USA – Repair short to ground in PPL/GRN or RED/BLK wire between BRAKE FLUID PRESSURE DIFFERENTIAL SWITCH and PARKING BRAKE SWITCH.
		Infinite.	Replace BRAKE FLUID PRESSURE DIFFERENTIAL SWITCH.
A12.	Disconnect BRAKE FLUID LEVEL SWITCH connector.	Brake Indicator goes out.	Replace BRAKE FLUID LEVEL SWITCH.
		Brake Indicator remains lit.	GO TO **A13.**
A13.	Disconnect INSTRUMENT PANEL CLUSTER ASSEMBLY connector C1.	Brake Indicator goes out.	GO TO **A14.**
		Brake Indicator remains lit.	GO TO **A15.**
A14.	Disconnect ELECTRONIC BRAKE CONTROL MODULE (EBCM) connector. Connect a digital multimeter from EBCM connector cavity 2 to chassis ground. Measure resistance.	Less than infinite.	Repair short to ground in RED/BLK wire between INSTRUMENT PANEL CLUSTER ASSEMBLY, EBCM, BRAKE FLUID PRESSURE DIFFERENTIAL SWITCH, and BRAKE FLUID LEVEL SWITCH.
		Infinite.	Refer to SECTION 5E2 for EBCM diagnosis.

BRAKE WARNING

SYSTEM DIAGNOSIS

BRAKE WARNING	DIAGNOSTIC CHART A (CONT'D)		
	TEST	RESULT	ACTION
A15.	Disconnect INSTRUMENT PANEL CLUSTER ASSEMBLY connector C2. Connect a digital multimeter from connector C2 terminal 5 to chassis ground. Measure resistance.	Less than infinite.	Check for a short to ground in PPL/RED wire. If OK, replace IGNITION SWITCH.
		Infinite.	Repair/Replace INSTRUMENT PANEL CLUSTER printed circuit.
A16.	Disconnect BRAKE FLUID LEVEL SWITCH connector. Connect a digital multimeter from connector cavity 1 to chassis ground. Measure resistance.	More than 0.3 ohms.	Repair BLK/GRN ground wire between BRAKE FLUID LEVEL SWITCH and G104.
		Less than 0.3 ohms.	GO TO **A17.**
A17.	Connect a digital multimeter from BRAKE FLUID LEVEL SWITCH connector cavity 2 to chassis ground. Measure voltage.	More than 10 volts.	Replace BRAKE FLUID LEVEL SWITCH.
		Less than 10 volts.	GO TO **A18.**
A18.	Backprobe INSTRUMENT PANEL CLUSTER ASSEMBLY connector C1 with a digital multimeter from terminal 7 to chassis ground. Measure voltage.	More than 10 volts.	Repair open in RED/BLK wire between INSTRUMENT PANEL CLUSTER ASSEMBLY and BRAKE FLUID LEVEL SWITCH.
		Less than 10 volts.	GO TO **A19.**
A19.	Backprobe INSTRUMENT PANEL CLUSTER ASSEMBLY connector C2 with a test lamp from terminal 6 to chassis ground.	Test lamp lights.	Repair/Replace INSTRUMENT PANEL CLUSTER printed circuit.
		Test lamp does not light.	Repair open in BLK/WHT wire between FUSE BLOCK and INSTRUMENT PANEL CLUSTER.
A20.	Disconnect PARKING BRAKE SWITCH connector. Connect a fused jumper from PARKING BRAKE SWITCH connector to chassis ground.	Brake Indicator lights.	Replace PARKING BRAKE SWITCH.
		Brake Indicator does not light.	Remove jumper, reconnect PARKING BRAKE SWITCH connector and GO TO **A21.**
A21.	Disconnect BRAKE FLUID PRESSURE DIFFERENTIAL SWITCH connector. Connect a fused jumper from BRAKE FLUID PRESSURE DIFFERENTIAL SWITCH connector terminal 1 to terminal 2. Apply parking brake.2	Brake Indicator lights.	Replace BRAKE FLUID PRESSURE DIFFERENTIAL SWITCH.
		Brake Indicator does not light.	CANADA – GO TO **A22.** USA – GO TO **A26.**

BRAKE WARNING

SYSTEM DIAGNOSIS

BRAKE WARNING — **DIAGNOSTIC CHART A (CONT'D)**

	TEST	RESULT	ACTION
A22.	Disconnect DRL CONTROLLER connector. Connect a digital multimeter from connector cavity 4 to chassis ground. Measure resistance.	More than 5.0 ohms.	Repair open in PPL or RED/BLK wire between DRL CONTROLLER and PARKING BRAKE SWITCH.
		Less than 5.0 ohms.	GO TO **A23.**
A23.	Connect a digital multimeter from DRL CONTROLLER connector cavity 8 to chassis ground. Measure resistance.	More than 3.0 ohms.	Repair BLK ground wire between DRL CONTROLLER and G201.
		Less than 3.0 ohms.	GO TO **A24.**
A24.	Connect a test lamp from DRL CONTROLLER connector cavity 7 to chassis ground.	Test lamp does not light.	Repair open in BLK/WHT wire between DRL CONTROLLER and S210.
		Test lamp lights.	GO TO **A25.**
A25.	Connect a digital multimeter from DRL CONTROLLER connector cavity 10 to chassis ground. Measure voltage.	More than 10 volts.	Replace DRL CONTROLLER.
		Less than 10 volts.	GO TO **A26.**
A26.	Release Parking Brake. Backprobe BRAKE FLUID PRESSURE DIFFERENTIAL SWITCH with a digital multimeter from terminal 2 to chassis ground. Measure voltage.	More than 10 volts.	CANADA – Repair open in PPL/GRN wire. USA – Repair open in PPL/GRN or RED/BLK wire between BRAKE FLUID PRESSURE DIFFERENTIAL SWITCH and PARKING BRAKE SWITCH.
		Less than 10 volts.	Repair open in RED/BLK wire between BRAKE FLUID PRESSURE DIFFERENTIAL SWITCH and S121.
A27.	Disconnect IGNITION SWITCH connector. Connect a digital multimeter from IGNITION SWITCH connector cavity 1 to chassis ground. Measure resistance.	More than 0.3 ohms.	Repair BLK ground wire between IGNITION SWITCH and G200.
		Less than 0.3 ohms.	GO TO **A28.**
A28.	Connect a digital multimeter from IGNITION SWITCH connector terminal 2 to terminal 1 (switch side). Measure resistance with IGNITION SWITCH in BULB TEST.	More than 1.0 ohm.	Replace IGNITION SWITCH.
		Less than 1.0 ohm.	GO TO **A29.**
A29.	Disconnect INSTRUMENT PANEL CLUSTER ASSEMBLY connector C2. Connect a digital multimeter from C2 terminal 5 to IGNITION SWITCH connector cavity 2. Measure resistance.	More than 0.3 ohms.	Repair open in PPL/RED wire.
		Less than 0.3 ohms.	Repair/Replace INSTRUMENT PANEL CLUSTER printed circuit.

BRAKE WARNING

For component replacement procedures, refer to the section listed below.

COMPONENT	SECTION
Brake Fluid Level Switch	Section 5A
Brake Fluid Pressure Differential Switch	Section 5A
Daytime Running Lights (DRL) Controller	Section 8C
Ignition Switch (without tilt wheel)	Section 3F1
Ignition Switch (with tilt wheel)	Section 3F2
Instrument Panel Cluster Printed Circuit	Section 8C
Parking Brake Switch	Section 5

CIRCUIT OPERATION

With the IGNITION SWITCH in either "ON" or "START," voltage is applied through the IG-COIL METER Fuse to the "BRAKE" Indicator in the INSTRUMENT PANEL CLUSTER ASSEMBLY. Whenever the Parking Brake is engaged, the BRAKE FLUID LEVEL SWITCH senses a low brake fluid condition or the BRAKE FLUID PRESSURE DIFFERENTIAL SWITCH senses unequal pressure in the brake pipes and hoses, the "BRAKE" Indicator is provided with a ground and lights. The Brake Indicator can also be grounded through the IGNITION SWITCH when the key is turned to the BULB TEST position.

BLANK

ANTILOCK BRAKE

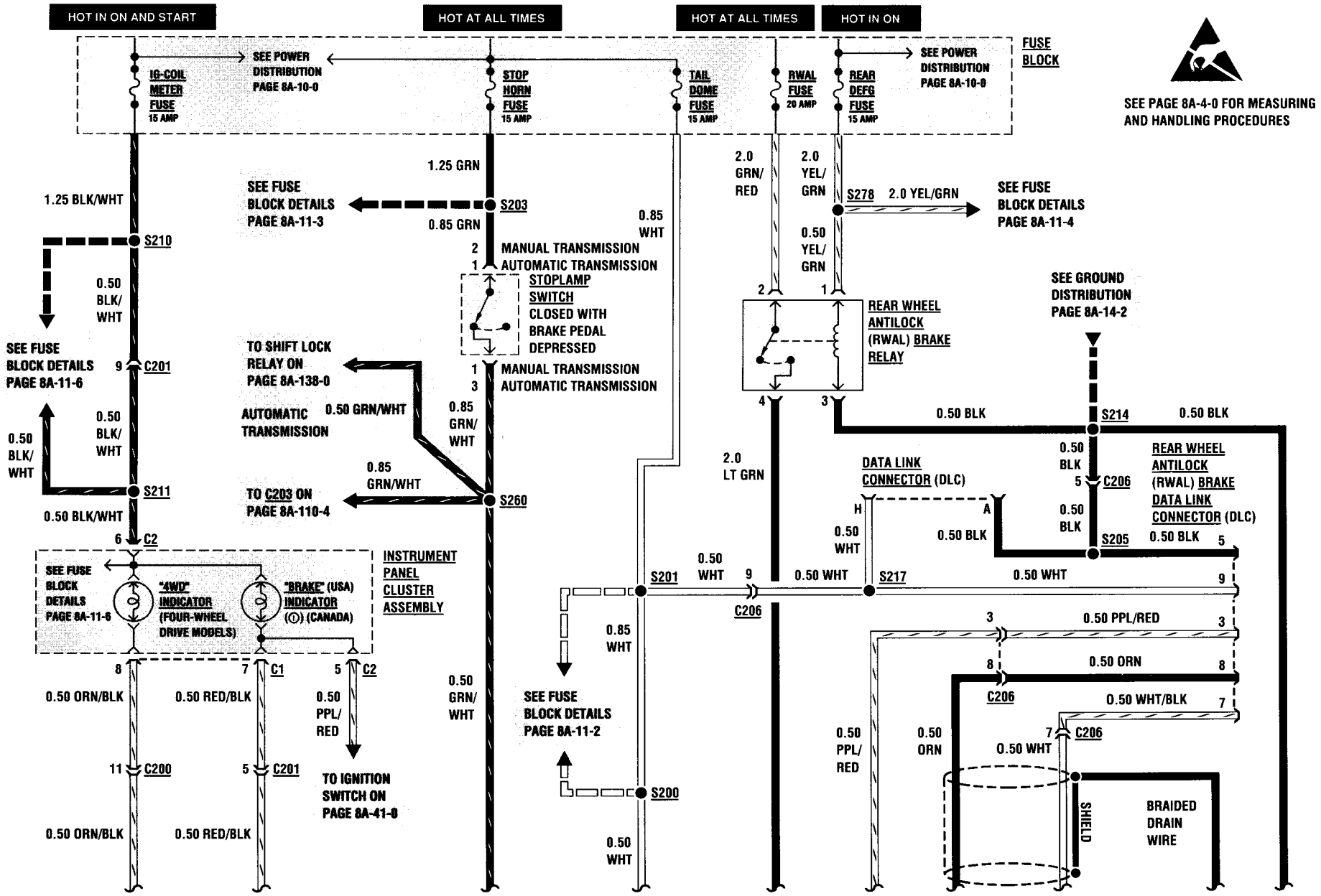

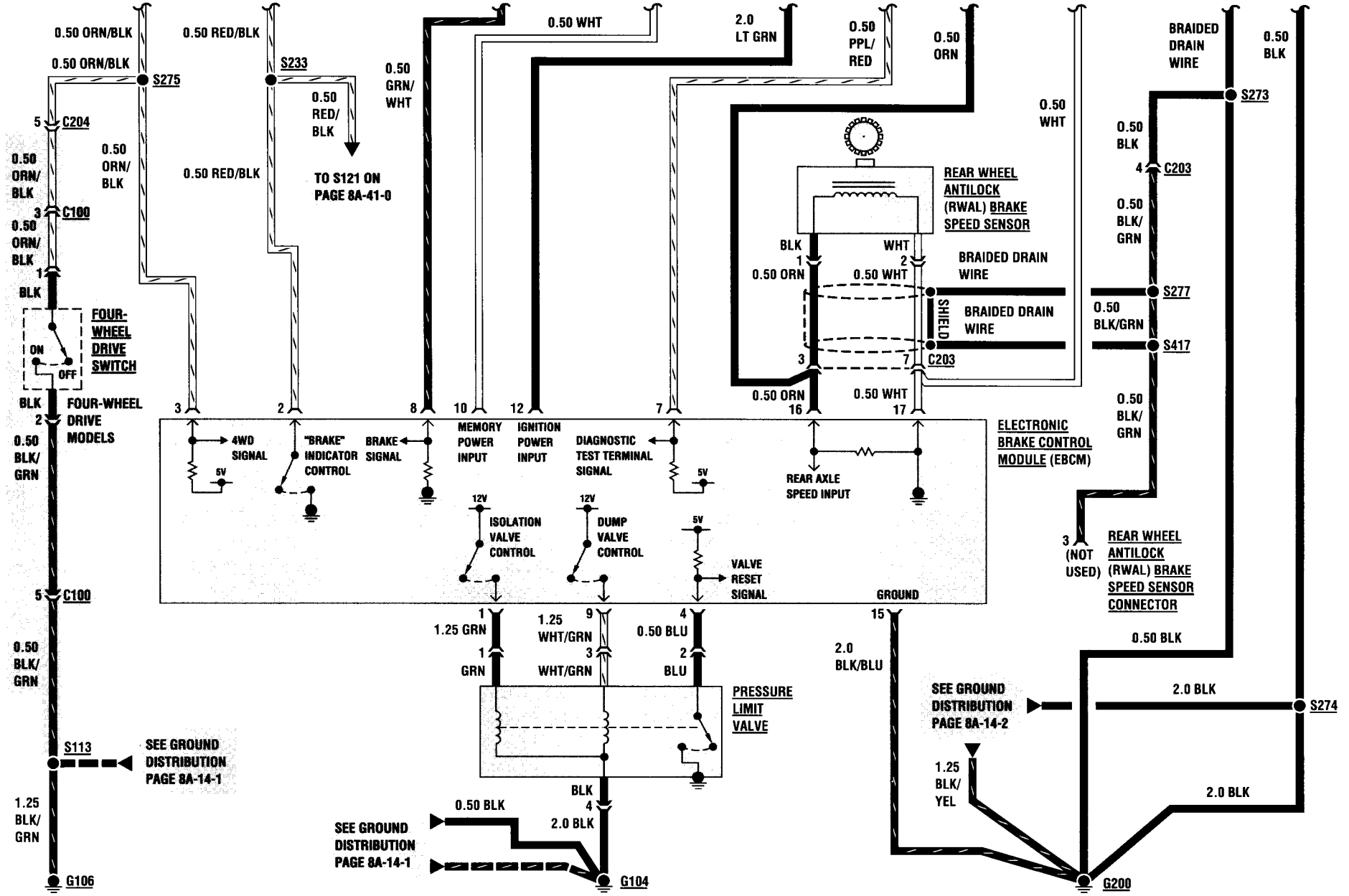
0.50 ORN/BLK
0.50 ORN/BLK
S275
5 C204
0.50 ORN/ BLK
3 C100
0.50 ORN/ BLK
1
BLK
FOUR-WHEEL DRIVE SWITCH
ON
OFF
BLK
2
FOUR-WHEEL DRIVE MODELS
0.50 BLK/ GRN
5 C100
0.50 BLK/ GRN
S113
SEE GROUND DISTRIBUTION PAGE 8A-14-1
1.25 BLK/ GRN
G106
0.50 ORN/ BLK
0.50 RED/BLK
0.50 RED/BLK
S233
0.50 RED/ BLK
TO S121 ON PAGE 8A-41-0
0.50 GRN/ WHT
0.50 WHT
2.0 LT GRN
0.50 PPL/ RED
0.50 ORN
0.50 WHT
BRAIDED DRAIN WIRE
0.50 BLK
S273
0.50 BLK
4 C203
0.50 BLK/ GRN
S277
0.50 BLK/GRN
S417
0.50 BLK/ GRN
REAR WHEEL ANTILOCK (RWAL) BRAKE SPEED SENSOR
BLK
1
0.50 ORN
WHT
2
0.50 WHT
BRAIDED DRAIN WIRE
SHIELD
BRAIDED DRAIN WIRE
3
7
C203
0.50 ORN
16
0.50 WHT
17
3
2
8
10
12
7
4WD SIGNAL
5V
"BRAKE" INDICATOR CONTROL
BRAKE SIGNAL
MEMORY POWER INPUT
IGNITION POWER INPUT
DIAGNOSTIC TEST TERMINAL SIGNAL
5V
REAR AXLE SPEED INPUT
ELECTRONIC BRAKE CONTROL MODULE (EBCM)
12V
ISOLATION VALVE CONTROL
12V
DUMP VALVE CONTROL
5V
VALVE RESET SIGNAL
GROUND
15
3 (NOT USED)
REAR WHEEL ANTILOCK (RWAL) BRAKE SPEED SENSOR CONNECTOR
1
1.25 GRN
1
GRN
1.25 WHT/GRN
9
3
WHT/GRN
0.50 BLU
4
2
BLU
PRESSURE LIMIT VALVE
2.0 BLK/BLU
0.50 BLK
SEE GROUND DISTRIBUTION PAGE 8A-14-2
2.0 BLK
S274
1.25 BLK/ YEL
2.0 BLK
BLK
4
2.0 BLK
0.50 BLK
SEE GROUND DISTRIBUTION PAGE 8A-14-1
G104
G200

COMPONENT	LOCATION	FIGURE	CONNECTOR
Data Link Connector (DLC)	Under LH I/P near Fuse Block		50-02
Electronic Brake Control Module (EBCM)	Under LH I/P near Fuse Block	201-05/A	44-04
Four-Wheel Drive Switch	Top of Transfer Case		
	(Manual Transmission)	201-11/B	
	(Automatic Transmission)	201-11/A	
Fuse Block	Under I/P left of Steering Column	201-05/A	
Instrument Panel Cluster Assembly	LH I/P	201-06/A	
C1 (12 Terminals)	I/P Harness to I/P Cluster Assembly, behind I/P Cluster Assembly	201-06/A	81-08
C2 (10 Terminals)	I/P Harness to I/P Cluster Assembly, behind I/P Cluster Assembly	201-06/A	81-08
Pressure Limit Valve	LH Rear Engine Compartment near Strut Tower	201-03/A	202-08/C1
Rear Wheel Antilock (RWAL) Brake Data Link Connector (DLC)	Under LH I/P near Fuse Block		44-05
Rear Wheel Antilock (RWAL) Brake Relay	Under LH I/P mounted to ECM	201-05/A	202-06/A3
Rear Wheel Antilock (RWAL) Brake Speed Sensor	In Differential Housing	201-13/A	
Stoplamp Switch	Under LH I/P above Brake Pedal		
	(Manual Transmission)	201-05/A	
	(Automatic Transmission)	201-05/A	202-07/C3
C100 (6 Cavities)	Engine Harness to Transmission Harness, RH rear side of Engine	201-04/A	202-07/A2
C200 (22 Cavities)	I/P Harness to Main Harness, behind I/P left of Steering Column	201-05/A	202-01/A1
C201 (10 Cavities)	I/P Harness to Main Harness, behind I/P left of Steering Column	201-05/A	202-02/A1
C203 (8 Cavities)	Main Harness to Floor Harness 1, behind I/P left of Steering Column	201-05/A	202-07/C2
C204 (22 Cavities)	Main Harness to Engine Harness, behind I/P left of Steering Column	201-05/A	202-04/A1
C206 (10 Cavities)	Main Harness to DLC and RWAL Brake DLC, below LH I/P near Fuse Box	201-05/A	202-05/A1
S113	Engine Harness, RH Engine Compartment above Starter Motor	201-04/A	

ANTILOCK BRAKE

COMPONENT	LOCATION	FIGURE	CONNECTOR
S200	Main Harness, behind I/P left of Steering Column	201-05/A	
S201	Main Harness, behind I/P left of Steering Column	201-05/A	
S203	Main Harness, behind I/P left of Steering Column	201-05/A	
S205	DLC Harness, behind LH I/P near Fuse Block		
S210	Main Harness, behind LH I/P near Fuse Block	201-05/A	
S211	I/P Harness, behind I/P near LH Front Speaker	201-06/A	
S214	Main Harness, behind I/P left of Steering Column	201-05/A	
S217	DLC Harness, behind LH I/P near Fuse Block		
S233	Main Harness, behind I/P near LH Front Speaker	201-06/A	
S260	Main Harness, behind Center I/P near Blower Speed Selector Switch	201-05/A	
S273	Main Harness, behind LH I/P near Electronic Brake Control Module (EBCM)	201-05/A	
S274	Main Harness, behind LH I/P near ECM	201-05/A	
S275	Main Harness, behind LH I/P near ECM	201-05/A	
S277	Floor Harness 1, under LH I/P near Grommet	201-07/A	
S278	Main Harness, behind LH I/P near Fuse Block	201-05/A	
S417	Floor Harness 1, behind LH Rear Wheelhousing	201-08/A	
G104	LH Rear Engine Compartment on Bulkhead	201-03/A	
G106	Front of Engine above Generator	201-04/A	
G200	Behind LH I/P above Fuse Block	201-05/A	

SYSTEM DIAGNOSIS

For system diagnosis and service information regarding the Rear Wheel Antilock (RWAL) Brake System refer to SECTION 5E and SECTION 5E3.

ELECTRONIC BRAKE CONTROL MODULE (EBCM) CONNECTOR

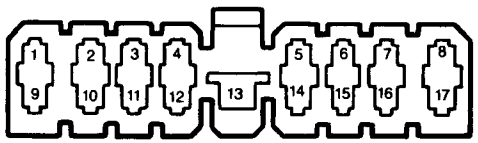

NATURAL

WIRING DETAIL LEGEND

CAVITY	WIRE COLOR	CIRCUIT
1	GRN	Pressure Limit Valve (Isolation Solenoid)
2	RED/BLK	"BRAKE" Indicator
3	ORN/BLK	Four-Wheel Drive Switch
4	BLU	Pressure Limit Valve (Reset Switch)
5	—	Not Used
6	—	Not Used
7	PPL/RED	Rear Wheel Antilock (RWAL) Brake Data Link Connector (DLC)
8	GRN/WHT	Stoplamp Switch
9	WHT/GRN	Pressure Limit Valve (Dump Solenoid)

WIRING DETAIL LEGEND (Cont'd)

CAVITY	WIRE COLOR	CIRCUIT
10	WHT	Tail Dome Fuse
11	—	Not Used
12	LT GRN	Rear Wheel Antilock (RWAL) Brake Relay
13	—	Not Used
14	—	Not Used
15	BLK/BLU	Ground – G200/G201
16	ORN	Rear Wheel Antilock (RWAL) Brake Speed Sensor
17	WHT	Rear Wheel Antilock (RWAL) Brake Speed Sensor

REAR WHEEL ANTILOCK (RWAL) BRAKE DATA LINK CONNECTOR (DLC)

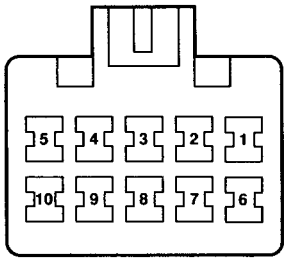

NATURAL

WIRING DETAIL LEGEND

CAVITY	WIRE COLOR	CIRCUIT
1	—	Not Used
2	BLU/YEL	Engine Control Module (ECM) Diagnostic Switch Signal
3	PPL/RED	Rear Wheel Antilock (RWAL) Brake Diagnostic Test Terminal Signal
4	—	Not Used
5	BLK	Ground – G200/G201
6	—	Not Used
7	WHT/BLK	Rear Wheel Antilock (RWAL) Brake Speed Sensor
8	ORN	Rear Wheel Antilock (RWAL) Brake Speed Sensor
9	WHT	Tail Dome Fuse
10	—	Not Used

DATA LINK CONNECTOR (DLC)

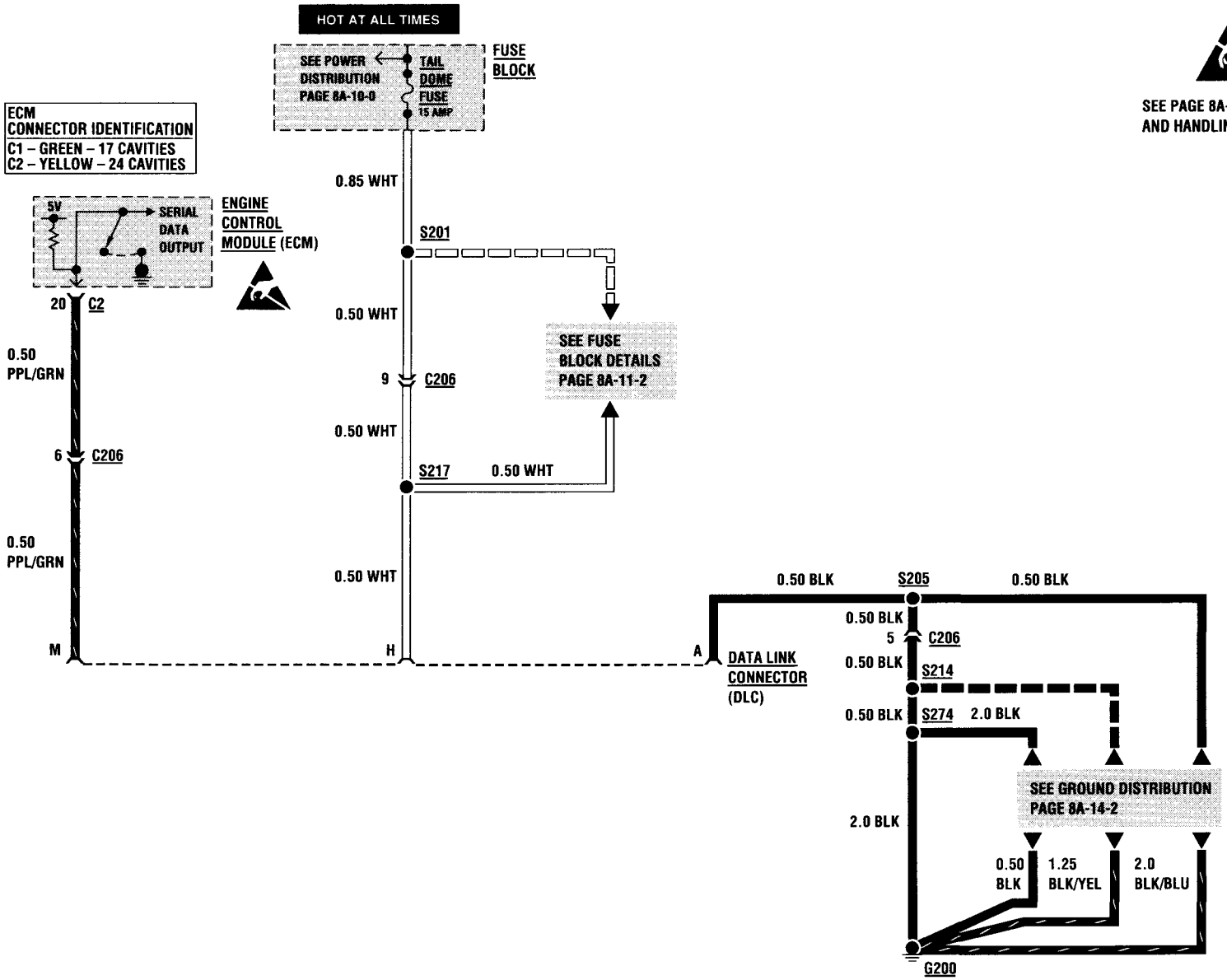

SEE PAGE 8A-4-0 FOR MEASURING AND HANDLING PROCEDURES

DATA LINK CONNECTOR (DLC)

COMPONENT	LOCATION	FIGURE	CONNECTOR
Data Link Connector (DLC)	Under LH I/P near Fuse Block		50-02
Engine Control Module	Under LH I/P		
C2 (24 Cavities)	Main Harness to ECM, behind I/P left of Steering Column	201-05/A	20-14
Fuse Block	Under I/P left of Steering Column	201-05/A	
C206 (10 Cavities)	Main Harness to DLC and RWAL Brake DLC	201-05/A	202-05/A1
S201	Main Harness, behind I/P left of Steering Column	201-05/A	
S205	DLC Harness, behind LH I/P near Fuse Block		
S214	Main Harness, behind I/P left of Steering Column	201-05/A	
S217	DLC Harness, behind LH I/P near Fuse Block		
S274	Main Harness, behind LH I/P near ECM	201-05/A	
G200	Behind LH I/P above Fuse Block	201-05/A	

DATA LINK CONNECTOR (DLC)

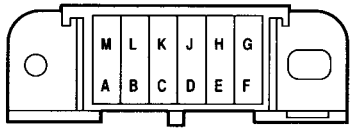

BLACK

WIRING DETAIL LEGEND

CAVITY	WIRE COLOR	CIRCUIT
A	BLK	Ground – G200/G201
B	—	Not Used
C	—	Not Used
D	—	Not Used
E	—	Not Used
F	—	Not Used
G	—	Not Used
H	WHT	Battery Feed – TAIL DOME Fuse
J	—	Not Used
K	—	Not Used
L	—	Not Used
M	PPL/GRN	Serial Data Output from ECM

BLANK

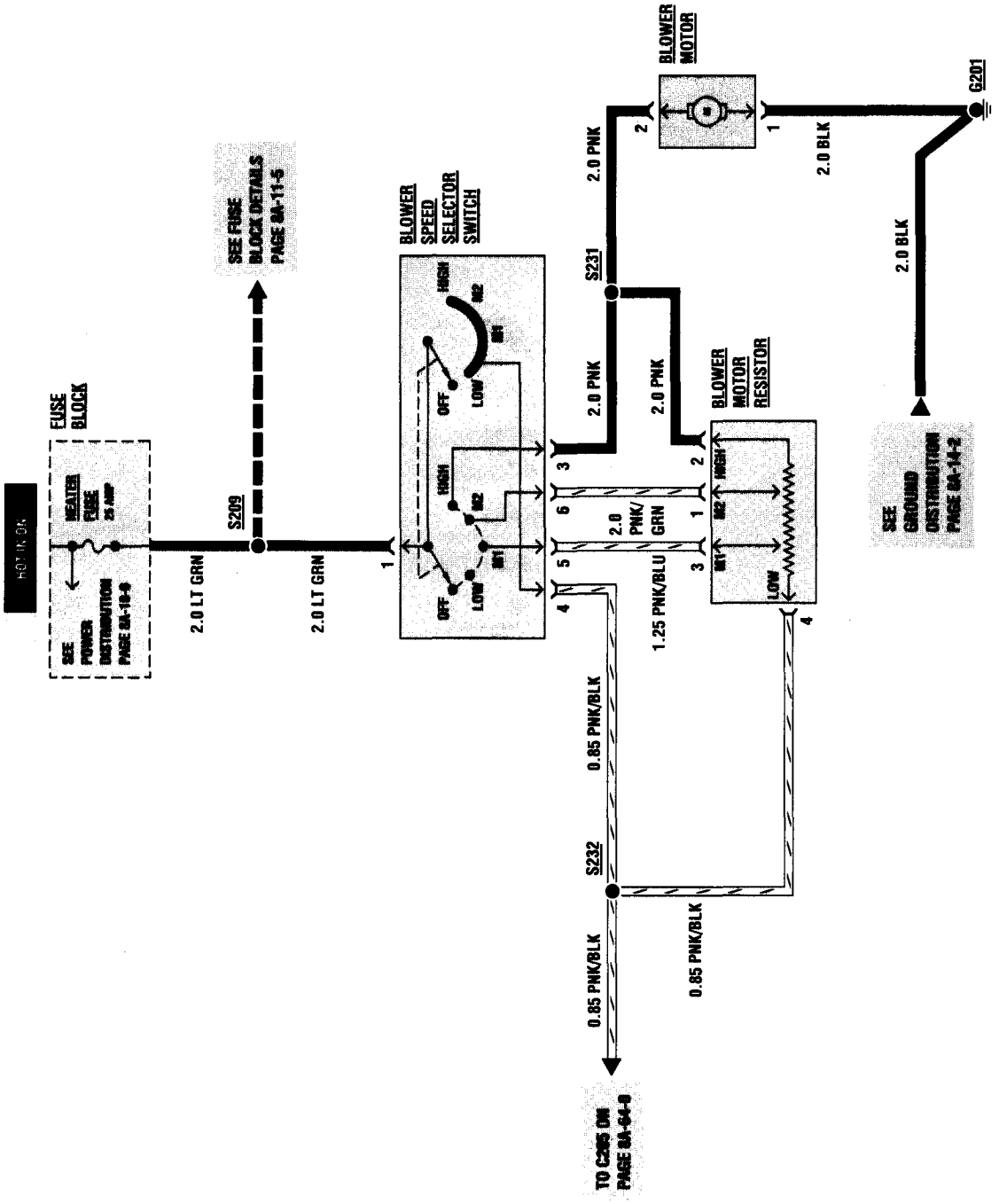
FUSE BLOCK
HEATER FUSE 25 AMP
SEE POWER DISTRIBUTION PAGE 8A-10-0
2.0 LT GRN
S209
SEE FUSE BLOCK DETAILS PAGE 8A-11-5
2.0 LT GRN
BLOWER SPEED SELECTOR SWITCH
OFF
LOW
HIGH
M1
M2
S231
2.0 PNK
2.0 PNK
2.0 PNK
BLOWER MOTOR
2.0 BLK
G201
2.0 BLK
BLOWER MOTOR RESISTOR
2.0 PNK/GRN
1.25 PNK/BLU
0.85 PNK/BLK
S232
0.85 PNK/BLK
0.85 PNK/BLK
SEE GROUND DISTRIBUTION PAGE 8A-14-2
TO C205 ON PAGE 8A-64-0

HEATER

COMPONENT	LOCATION	FIGURE	CONNECTOR
Blower Motor	Behind RH I/P	201-05/A	
Blower Motor Resistor	Behind RH I/P in Blower Assembly	201-05/A	202-07/C3
Blower Speed Selector Switch	Center of I/P above Radio	201-05/A	202-07/B3
Fuse Block	Under I/P left of Steering Column	201-05/A	
S209	Main Harness, behind Center I/P near Blower Speed Selector Switch	201-05/A	
S231	Main Harness, behind RH I/P near Blower Motor	201-05/A	
S232	Main Harness, behind Center I/P near Blower Speed Selector Switch	201-05/A	
G201	Behind RH I/P near Blower Assembly	201-05/A	

TROUBLESHOOTING HINTS

1. Check HEATER Fuse with a fuse tester.
2. Check that G201 is clean and tight.

SYSTEM DIAGNOSIS

HEATER	DIAGNOSTIC CHART A		
	TEST	RESULT	ACTION
A1.	Turn ignition switch to "ON." Move BLOWER SPEED SELECTOR SWITCH through all four positions and back to "OFF."	BLOWER MOTOR operates in all four speeds and stops with switch in "OFF."	All systems in this cell are functioning normally.
		BLOWER MOTOR operates only in HIGH.	GO TO **A13.**
		BLOWER MOTOR does not operate in HIGH.	GO TO **A2.**
		BLOWER MOTOR does not operate in M2.	GO TO **A3.**
		BLOWER MOTOR does not operate in M1.	GO TO **A5.**
		BLOWER MOTOR does not operate in LOW.	GO TO **A7.**
		BLOWER MOTOR does not operate at any speed.	GO TO **A9.**
		BLOWER MOTOR continues to operate with switch in "OFF."	GO TO **A15.**
A2.	Move BLOWER SPEED SELECTOR SWITCH to HIGH. Backprobe BLOWER SPEED SELECTOR SWITCH connector with a test lamp from cavity 3 to chassis ground.	Test lamp lights.	Repair open in PNK wire between BLOWER SPEED SELECTOR SWITCH and S231.
		Test lamp does not light.	Replace BLOWER SPEED SELECTOR SWITCH.
A3.	Move BLOWER SPEED SELECTOR SWITCH to M2. Backprobe BLOWER SPEED SELECTOR SWITCH connector with a test lamp from cavity 6 to chassis ground.	Test lamp does not light.	Replace BLOWER SPEED SELECTOR SWITCH.
		Test lamp lights.	GO TO **A4.**
A4.	Backprobe BLOWER MOTOR RESISTOR connector with a test lamp from cavity 1 to chassis ground.	Test lamp does not light.	Repair open in PNK/GRN wire between BLOWER SPEED SELECTOR SWITCH and BLOWER MOTOR RESISTOR.
		Test lamp lights.	Replace BLOWER MOTOR RESISTOR.
A5.	Move BLOWER SPEED SELECTOR SWITCH to M1. Backprobe BLOWER SPEED SELECTOR SWITCH connector with a test lamp from cavity 5 to chassis ground.	Test lamp does not light.	Replace BLOWER SPEED SELECTOR SWITCH.
		Test lamp lights.	GO TO **A6.**

HEATER

SYSTEM DIAGNOSIS

HEATER	DIAGNOSTIC CHART A (CONT'D)		
	TEST	RESULT	ACTION
A6.	Backprobe BLOWER MOTOR RESISTOR connector with a test lamp from cavity 3 to chassis ground.	Test lamp does not light.	Repair open in PNK/BLU wire between BLOWER SPEED SELECTOR SWITCH and BLOWER MOTOR RESISTOR.
		Test lamp lights.	Replace BLOWER MOTOR RESISTOR.
A7.	Move BLOWER SPEED SELECTOR SWITCH to LOW. Backprobe BLOWER SPEED SELECTOR SWITCH connector with a test lamp from cavity 4 to chassis ground.	Test lamp does not light.	Replace BLOWER SPEED SELECTOR SWITCH.
		Test lamp lights.	GO TO **A8.**
A8.	Backprobe BLOWER MOTOR RESISTOR connector with a test lamp from cavity 4 to chassis ground.	Test lamp does not light.	Repair open in PNK/BLK wire between BLOWER SPEED SELECTOR SWITCH and BLOWER MOTOR RESISTOR.
		Test lamp lights.	Replace BLOWER MOTOR RESISTOR.
A9.	Backprobe BLOWER SPEED SELECTOR SWITCH connector with a test lamp from cavity 1 to chassis ground.	Test lamp does not light.	Repair open in LT GRN wire between FUSE BLOCK and BLOWER SPEED SELECTOR SWITCH.
		Test lamp lights.	GO TO **A10.**
A10.	Move BLOWER SPEED SELECTOR SWITCH to HIGH. Backprobe BLOWER SPEED SELECTOR SWITCH with a test lamp from cavity 3 to chassis ground.	Test lamp does not light.	Replace BLOWER SPEED SELECTOR SWITCH.
		Test lamp lights.	GO TO **A11.**
A11.	Backprobe BLOWER MOTOR connector with a test lamp from cavity 2 to chassis ground.	Test lamp does not light.	Repair open in PNK wire between BLOWER MOTOR and BLOWER SPEED SELECTOR SWITCH.
		Test lamp lights.	GO TO **A12.**
A12.	Turn ignition switch to "OFF." Backprobe BLOWER MOTOR connector with a digital multimeter from cavity 1 to chassis ground. Measure resistance.	More than 3.0 ohms.	Repair open in BLK ground wire between BLOWER MOTOR and G201.
		Less than 3.0 ohms.	Replace BLOWER MOTOR.
A13.	Move BLOWER SPEED SELECTOR SWITCH to HIGH. Backprobe BLOWER MOTOR RESISTOR with a test lamp from cavity 2 to chassis ground.	Test lamp does not light.	Repair open in PNK wire between BLOWER MOTOR RESISTOR and S231.
		Test lamp lights.	GO TO **A14.**

SYSTEM DIAGNOSIS

HEATER	DIAGNOSTIC CHART A (CONT'D)		
	TEST	RESULT	ACTION
A14.	Move BLOWER SPEED SELECTOR SWITCH to LOW. Backprobe BLOWER SPEED SELECTOR SWITCH connector with a test lamp from cavity 4 to chassis ground.	Test lamp does not light.	Replace BLOWER SPEED SELECTOR SWITCH.
		Test lamp lights.	Replace BLOWER MOTOR RESISTOR.
A15.	Disconnect BLOWER SPEED SELECTOR SWITCH connector.	BLOWER MOTOR stops.	Replace BLOWER SPEED SELECTOR SWITCH.
		BLOWER MOTOR continues to operate.	GO TO **A16.**
A16.	Disconnect BLOWER MOTOR RESISTOR connector.	BLOWER MOTOR stops.	Repair short to voltage in PNK/BLK, PNK/BLU or in PNK/GRN wire between BLOWER SPEED SELECTOR SWITCH and BLOWER MOTOR RESISTOR.
		BLOWER MOTOR continues to operate.	Repair short to voltage in PNK wire between BLOWER SPEED SELECTOR SWITCH, BLOWER MOTOR RESISTOR and BLOWER MOTOR.

For component replacement procedures, refer to the section listed below.

COMPONENT	SECTION
Blower Motor	Section 1A
Blower Motor Resistor	Section 1A
Blower Speed Selector Switch	Section 1A

CIRCUIT OPERATION

Battery voltage is applied through the HEATER Fuse to the BLOWER SPEED SELECTOR SWITCH when the ignition switch is in the "ON" position. When the BLOWER SPEED SELECTOR SWITCH is turned to any position but "OFF," battery voltage is applied through the closed contact in the BLOWER SPEED SELECTOR SWITCH.

With the BLOWER SPEED SELECTOR SWITCH in LOW, current must travel the entire length of the resistive element in the BLOWER MOTOR RESISTOR to the BLOWER MOTOR. The resisted voltage caused by the BLOWER MOTOR RESISTOR maintains the BLOWER MOTOR at LOW speed.

When the BLOWER SPEED SELECTOR SWITCH is in the M1 position, voltage passes only partially through the BLOWER MOTOR RESISTOR before reaching the BLOWER MOTOR. Since less of the BLOWER MOTOR RESISTOR is a part of the circuit, the resistance in the circuit is lower and the BLOWER MOTOR operates at a higher speed.

M2 operation is identical to M1 operation except that even less of the BLOWER MOTOR RESISTOR is in the circuit. Therefore, BLOWER OPERATION in M2 is faster than it is in M1.

With the BLOWER SPEED SELECTOR SWITCH in the HIGH position, voltage bypasses the BLOWER MOTOR RESISTOR entirely and passes directly to the BLOWER MOTOR.

The BLOWER MOTOR is permanently grounded at G201.

DEFOGGER

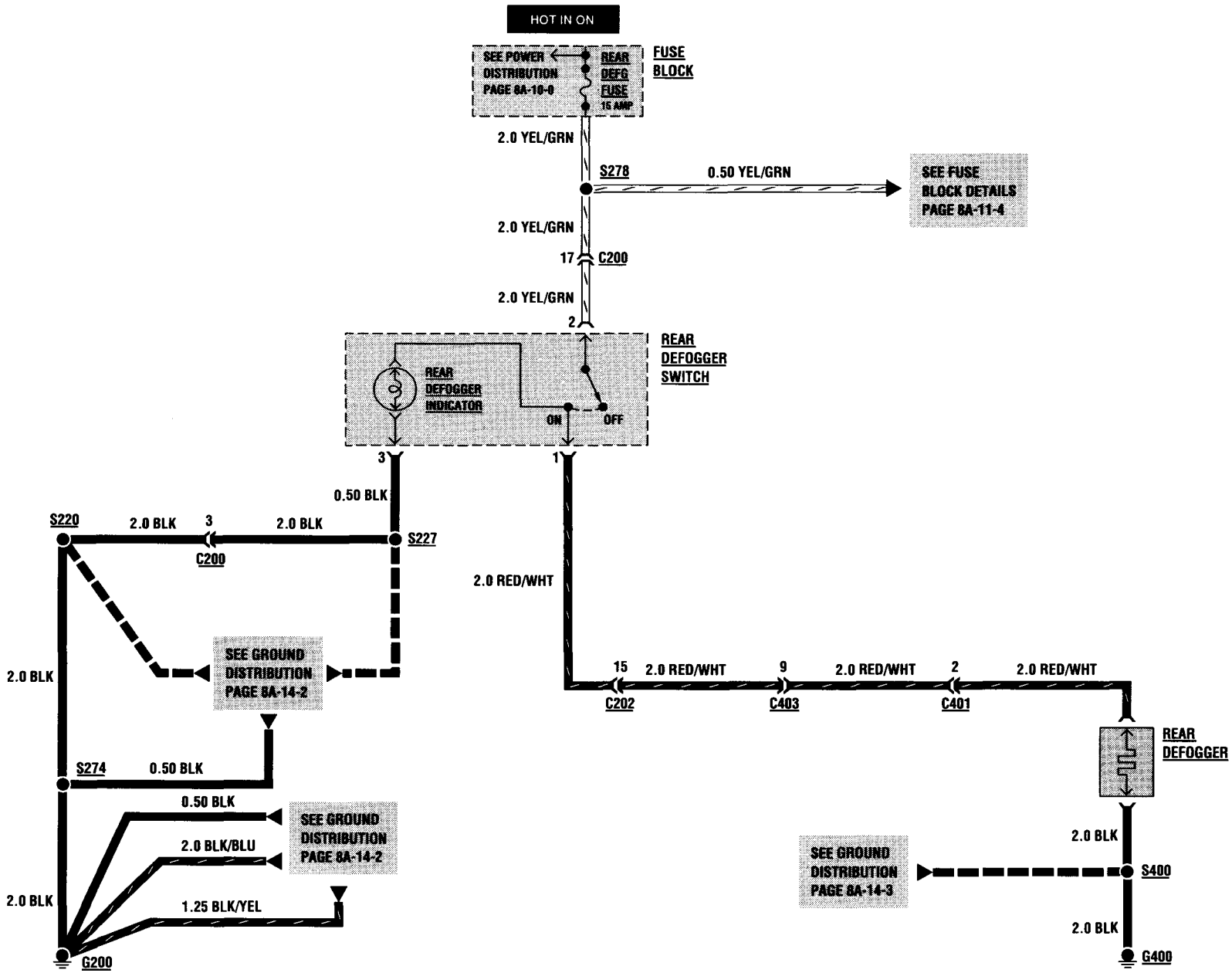
HOT IN ON
SEE POWER DISTRIBUTION PAGE 8A-18-0
REAR DEFG FUSE 15 AMP
FUSE BLOCK
2.0 YEL/GRN
S278
0.50 YEL/GRN
SEE FUSE BLOCK DETAILS PAGE 8A-11-4
2.0 YEL/GRN
17
C200
2.0 YEL/GRN
2
REAR DEFOGGER INDICATOR
ON
OFF
REAR DEFOGGER SWITCH
3
1
0.50 BLK
S220
2.0 BLK
3
2.0 BLK
S227
C200
2.0 RED/WHT
SEE GROUND DISTRIBUTION PAGE 8A-14-2
2.0 BLK
15
2.0 RED/WHT
9
2.0 RED/WHT
2
2.0 RED/WHT
C202
C403
C401
REAR DEFOGGER
S274
0.50 BLK
0.50 BLK
SEE GROUND DISTRIBUTION PAGE 8A-14-2
2.0 BLK/BLU
2.0 BLK
SEE GROUND DISTRIBUTION PAGE 8A-14-3
S400
2.0 BLK
1.25 BLK/YEL
2.0 BLK
G200
G400

DEFOGGER

COMPONENT	LOCATION	FIGURE	CONNECTOR
Fuse Block	Under I/P left of Steering Column	201-05/A	
Rear Defogger	In Rear Window	201-09/A	
Rear Defogger Switch	LH I/P left of Steering Column	201-06/A	202-07/A3
C200 (22 Cavities)	I/P Harness to Main Harness, behind I/P left of Steering Column	201-06/A	202-01/A1
C202 (20 Cavities)	I/P Harness to Floor Harness 1, behind I/P left of Steering Column	201-07/A	202-03/A1
C401 (2 Cavities)	Rear Lamp Harness to Back Door Harness, behind RH Rear Wheelhousing	201-08/A	
C403 (12 Cavities)	Floor Harness 1 to Rear Lamp Harness, behind LH Rear Wheelhousing	201-08/A	202-05/A2
S220	Main Harness, behind I/P left of Steering Column	201-05/A	
S227	I/P Harness, behind Center I/P near Radio	201-06/A	
S274	Main Harness, behind LH I/P near ECM	201-05/A	
S278	Main Harness, behind LH I/P near Fuse Block	201-05/A	
S400	Back Door Harness, near License Plate Lamps	201-09/A	
G200	Behind LH I/P above Fuse Block	201-05/A	
G400	Inside Back Door near License Plate Lamps	201-09/A	

TROUBLESHOOTING HINTS

1. Check REAR DEFG Fuse with a fuse tester.
2. Check that REAR DEFOGGER grid is continuous and free from damage. Refer to SECTION 10-2.
3. Check that G200 and G400 are clean and tight.

DEFOGGER

SYSTEM DIAGNOSIS

DEFOGGER	DIAGNOSTIC CHART A		
	TEST	RESULT	ACTION
A1.	Turn ignition switch to "ON." Press REAR DEFOGGER SWITCH to ON position.	Rear Defogger Indicator lights and rear window starts to warm.	GO TO **A2.**
		Rear Defogger Indicator lights but rear window does not warm.	GO TO **A3.**
		Rear window warms but Rear Defogger Indicator does not light.	Check incandescent bulb in switch or for an open in BLK wire between REAR DEFOGGER SWITCH and G200. If OK, replace REAR DEFOGGER SWITCH.
		Rear Defogger Indicator does not light and rear window does not warm.	GO TO **A5.**
A2.	Press REAR DEFOGGER SWITCH to the OFF position.	Rear Defogger Indicator goes out and rear window cools.	All systems diagnosed in this cell are functioning normally.
		Rear Defogger Indicator remains lit and rear window does not cool.	GO TO **A6**.
A3.	Connect a test lamp between REAR DEFOGGER RED/WHT wire connector and chassis ground.	Test lamp lights.	Repair BLK ground wire between REAR DEFOGGER and G400 and retest.
		Test lamp does not light.	GO TO **A4.**
A4.	Backprobe REAR DEFOGGER SWITCH connector with a test lamp from cavity 1 to chassis ground.	Test lamp lights.	Repair open in RED/WHT wire between REAR DEFOGGER SWITCH and REAR DEFOGGER.
		Test lamp does not light.	Replace REAR DEFOGGER SWITCH.
A5.	Backprobe REAR DEFOGGER SWITCH connector with a test lamp from cavity 2 to chassis ground.	Test lamp does not light.	Repair open in YEL/GRN wire.
		Test lamp lights.	Replace REAR DEFOGGER SWITCH.
A6.	Disconnect REAR DEFOGGER SWITCH connector. Connect a test lamp from cavity 1 to chassis ground.	Test lamp lights.	Repair short to voltage in RED/WHT wire between REAR DEFOGGER SWITCH and REAR DEFOGGER.
		Test lamp does not light.	Replace REAR DEFOGGER SWITCH.

For component replacement procedures, refer to the section listed below.

COMPONENT	SECTION
Rear Defogger Switch	Section 8C

DEFOGGER

CIRCUIT OPERATION

With the ignition switch in "ON," voltage is applied through the REAR DEFG Fuse to the REAR DEFOGGER SWITCH.

Whenever the REAR DEFOGGER SWITCH is pressed to the ON position, system voltage is applied through the closed contacts of the switch to the REAR DEFOGGER INDICATOR, and to the REAR DEFOGGER. The REAR DEFOGGER is permanently grounded at G400. Because the REAR DEFOGGER is a resistive element, it begins to heat as soon as voltage is applied.

The REAR DEFOGGER SWITCH does not incorporate an integral timing circuit. Therefore, the switch must be pressed to the OFF position to terminate REAR DEFOGGER operation.

HVAC: COMPRESSOR CONTROL

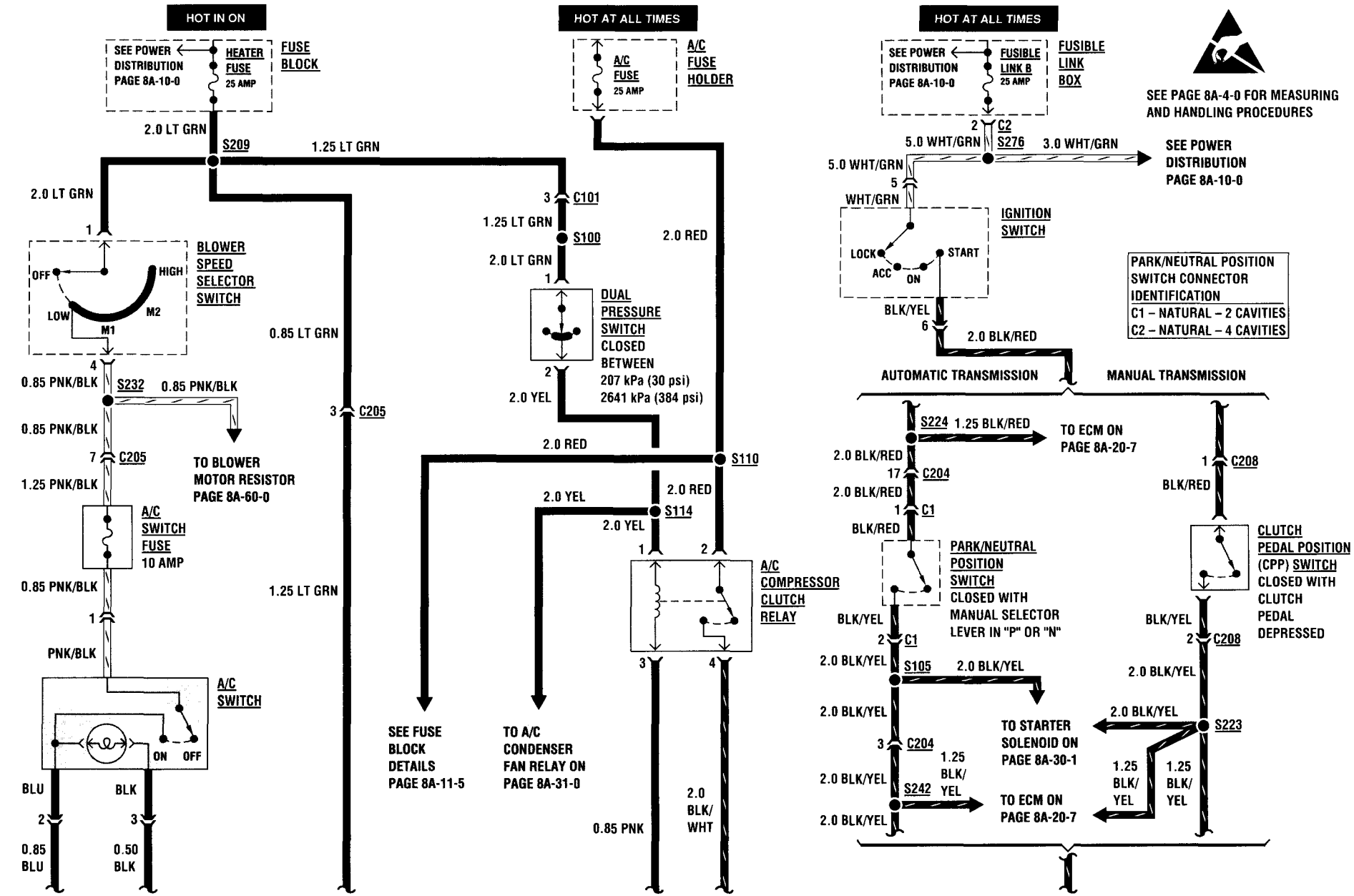

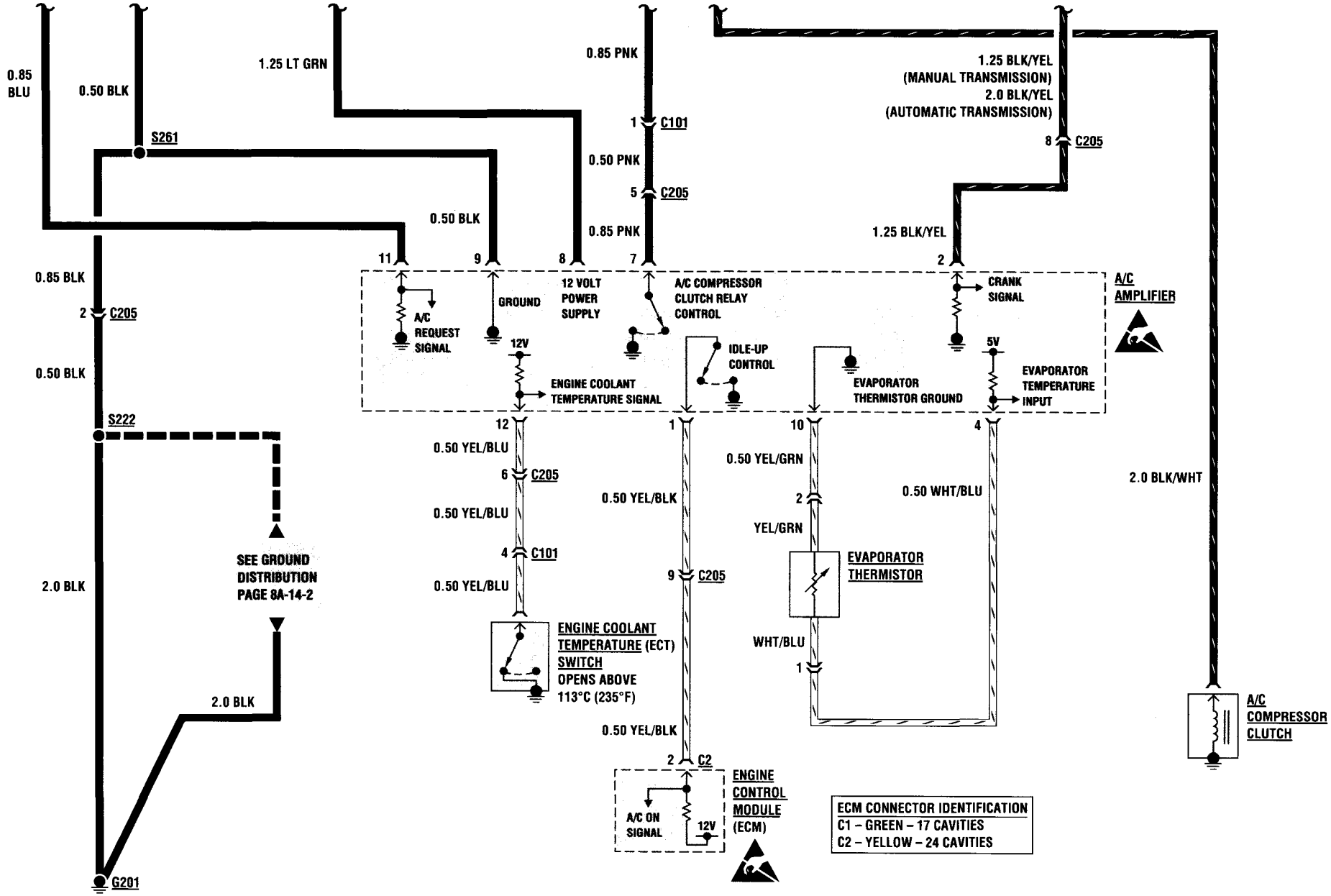
0.85 BLU
0.50 BLK
1.25 LT GRN
0.85 PNK
1.25 BLK/YEL
(MANUAL TRANSMISSION)
2.0 BLK/YEL
(AUTOMATIC TRANSMISSION)
S261
1 C101
8 C205
0.50 PNK
5 C205
0.50 BLK
0.85 PNK
1.25 BLK/YEL
11
9
8
7
2
0.85 BLK
2 C205
A/C REQUEST SIGNAL
GROUND
12 VOLT POWER SUPPLY
A/C COMPRESSOR CLUTCH RELAY CONTROL
CRANK SIGNAL
A/C AMPLIFIER
12V
IDLE-UP CONTROL
5V
0.50 BLK
ENGINE COOLANT TEMPERATURE SIGNAL
EVAPORATOR THERMISTOR GROUND
EVAPORATOR TEMPERATURE INPUT
S222
12
1
10
4
0.50 YEL/BLU
6 C205
0.50 YEL/GRN
2.0 BLK/WHT
0.50 YEL/BLK
2
0.50 WHT/BLU
0.50 YEL/BLU
YEL/GRN
4 C101
SEE GROUND DISTRIBUTION PAGE 8A-14-2
EVAPORATOR THERMISTOR
2.0 BLK
0.50 YEL/BLU
9 C205
ENGINE COOLANT TEMPERATURE (ECT) SWITCH OPENS ABOVE 113°C (235°F)
WHT/BLU
1
A/C COMPRESSOR CLUTCH
2.0 BLK
0.50 YEL/BLK
2 C2
ENGINE CONTROL MODULE (ECM)
A/C ON SIGNAL
12V
ECM CONNECTOR IDENTIFICATION
C1 – GREEN – 17 CAVITIES
C2 – YELLOW – 24 CAVITIES
G201

HVAC: COMPRESSOR CONTROL

COMPONENT	LOCATION	FIGURE	CONNECTOR
A/C Amplifier	Behind RH I/P on Evaporator	201-05/A	64-10
A/C Compressor Clutch	LH Front Engine Compartment behind Radiator	201-02/A	
A/C Compressor Clutch Relay	RH Engine Compartment near Fusible Link Box	201-02/A	202-07/C3
A/C Fuse Holder	RH Engine Compartment attached to A/C Compressor Clutch Relay	201-02/A	
A/C Switch	Center of I/P above Radio	201-05/A	
A/C Switch Fuse	Behind Center I/P	201-05/A	
Blower Speed Selector Switch	Center of I/P above Radio	201-05/A	202-07/B3
Clutch Pedal Position (CPP) Switch (Manual Transmission)	Behind LH I/P above Clutch Pedal	201-05/A	
Coolant Temperature (ECT) Switch	RH Engine Compartment on Intake Manifold	201-02/A	
Dual Pressure Switch	RH Front Engine Compartment behind Radiator	201-02/A	
Engine Control Module	Under LH I/P		
C2 (24 Cavities)	Main Harness to ECM, behind I/P left of Steering Column	201-05/A	20-14
Engine Evaporator Thermistor	Behind RH I/P in Evaporator Housing	201-05/A	
Fuse Block	Under I/P left of Steering Column	201-05/A	
Fusible Link Box	RH Engine Compartment on Inner Fender	201-00/B	
Ignition Switch	On Steering Column	201-05/A	202-06/C1
Park/Neutral Position Switch (Automatic Transmission)	RH side of Transmission	201-11/A	
C1 (2 Cavities)	Engine Harness to Park/Neutral Position Switch, rear of Engine		
C101 (4 Cavities)	Main Harness to Outer A/C Harness, RH Rear Engine Compartment near Battery	201-00/B	202-06/B3
C204 (22 Cavities)	Main Harness to Engine Harness, behind I/P left of Steering Column	201-05/A	202-04/A1
C205 (10 Cavities)	Main Harness to Inner A/C Harness, behind I/P right of Radio	201-05/A	202-02/A2
C208 (2 Cavities) (Manual Transmission)	Main Harness to Clutch Pedal Position Switch Jumper, behind LH I/P above Clutch Pedal	201-05/A	
S100	Outer A/C Harness, RH Engine Compartment near Strut Tower	201-01/A	
S105 (Automatic Transmission)	Engine Harness, at Bulkhead near Distributor	201-03/A	
S110	Outer A/C Harness, RH Engine Compartment near Strut Tower	201-01/A	
S114	Outer A/C Harness, RH Engine Compartment on top of Strut Tower	201-01/A	
S209	Main Harness, behind Center I/P near Blower Speed Selector Switch	201-05/A	

HVAC: COMPRESSOR CONTROL

COMPONENT	LOCATION	FIGURE	CONNECTOR
S222	Main Harness, behind Center I/P near Blower Speed Selector Switch	201-05/A	
S223 (Manual Transmission)	Main Harness, behind I/P near Fuse Block	201-05/A	
S224 (Automatic Transmission)	Main Harness, behind I/P left of Steering Column	201-05/A	
S232	Main Harness, behind Center I/P near Blower Speed Selector Switch	201-05/A	
S242 (Automatic Transmission)	Main Harness, behind I/P left of Steering Column	201-05/A	
S261	Inner A/C Harness, behind RH I/P near A/C Amplifier	201-05/A	
S276	Main Harness, behind I/P left of Steering Column	201-05/A	
G201	Behind RH I/P near Blower Assembly	201-05/A	

TROUBLESHOOTING HINTS

1. Check A/C FUSIBLE LINK B for an open.
2. Check A/C FUSE, A/C SWITCH FUSE and HEATER Fuse with a fuse tester.
3. Be sure A/C system is properly charged. Refer to SECTION 1B.
4. Refer to Cell 60 for blower motor and Heater System Diagnosis.
5. Refer to Cell 31 for A/C Condenser Fan Diagnosis.
6. Check that ground G201 is clean and tight.

HVAC: COMPRESSOR CONTROL

SYSTEM DIAGNOSIS

HVAC: COMPRESSOR CONTROL	DIAGNOSTIC CHART A	
TEST	**RESULT**	**ACTION**
A1. Start engine, press A/C SWITCH to "ON" and move BLOWER SPEED SELECTOR SWITCH to any position except "OFF."	A/C COMPRESSOR CLUTCH engages and BLOWER MOTOR operates at selected speed.	All systems diagnosed in this cell are functioning normally.
	A/C COMPRESSOR CLUTCH engages, but BLOWER MOTOR does not operate.	Refer to Cell 60 for BLOWER MOTOR and Heater System Diagnosis.
	BLOWER MOTOR operates, but A/C COMPRESSOR CLUTCH does not engage.	Turn IGNITION SWITCH to "LOCK," then turn it to "ON," and GO TO **A2**.
	A/C COMPRESSOR CLUTCH remains engaged with A/C SWITCH OFF.	GO TO **A26**.
A2. Backprobe A/C COMPRESSOR CLUTCH connector with a test lamp from connector cavity to chassis ground.	Test lamp lights.	Replace A/C COMPRESSOR CLUTCH.
	Test lamp does not light.	GO TO **A3**.
A3. Backprobe A/C COMPRESSOR CLUTCH RELAY connector with a test lamp from cavity 4 to chassis ground.	Test lamp lights.	Repair open in BLK/WHT wire between A/C COMPRESSOR CLUTCH RELAY and A/C COMPRESSOR CLUTCH.
	Test lamp does not light.	GO TO **A4**.
A4. Backprobe A/C COMPRESSOR CLUTCH RELAY connector with a test lamp from cavity 2 to chassis ground.	Test lamp does not light.	Repair open in RED wire between A/C COMPRESSOR CLUTCH RELAY and A/C FUSE HOLDER.
	Test lamp lights.	GO TO **A5**.
A5. Backprobe DUAL PRESSURE SWITCH connector with a test lamp from cavity 1 to chassis ground.	Test lamp does not light.	Repair open in LT GRN wire between DUAL PRESSURE SWITCH and FUSE BLOCK.
	Test lamp lights.	GO TO **A6**.
A6. Backprobe DUAL PRESSURE SWITCH connector with a test lamp from cavity 2 to chassis ground.	Test lamp does not light.	Replace DUAL PRESSURE SWITCH.
	Test lamp lights.	GO TO **A7**.

HVAC: COMPRESSOR CONTROL

SYSTEM DIAGNOSIS

HVAC: COMPRESSOR CONTROL — DIAGNOSTIC CHART A (CONT'D)

	TEST	RESULT	ACTION
A7.	Backprobe A/C COMPRESSOR CLUTCH RELAY connector with a test lamp from cavity 1 to chassis ground.	Test lamp does not light.	Repair open in YEL wire between DUAL PRESSURE SWITCH and A/C COMPRESSOR CLUTCH RELAY.
		Test lamp lights.	GO TO **A8**.
A8.	Disconnect A/C COMPRESSOR CLUTCH RELAY connector. Connect a test lamp from connector cavity 3 to B+.	Test lamp lights.	Replace A/C COMPRESSOR CLUTCH RELAY.
		Test lamp does not light.	GO TO **A9**.
A9.	Disconnect A/C AMPLIFIER connector. Connect a digital multimeter from A/C COMPRESSOR CLUTCH RELAY connector cavity 3 to A/C AMPLIFIER connector cavity 7. Measure resistance.	More than 0.5 ohms.	Repair open in PNK wire.
		Less than 0.5 ohms.	GO TO **A10.**
A10.	Connect a digital multimeter from connector cavity 9 to chassis ground. Measure resistance.	More than 3.0 ohms.	Repair BLK wire between G201 and A/C AMPLIFIER.
		Less than 3.0 ohms.	GO TO **A11.**
A11.	Backprobe BLOWER SPEED SELECTOR SWITCH connector with a test lamp from cavity 1 to chassis ground.	Test lamp does not light.	Repair open in LT GRN wire between BLOWER SPEED SELECTOR SWITCH and S209.
		Test lamp lights.	GO TO **A12.**
A12.	Backprobe BLOWER SPEED SELECTOR SWITCH connector with a test lamp from cavity 4 to chassis ground.	Test lamp does not light.	Replace BLOWER SPEED SELECTOR SWITCH.
		Test lamp lights.	GO TO **A13.**
A13.	Backprobe A/C SWITCH connector with a test lamp from cavity 1 to chassis ground.	Test lamp does not light.	Repair open in A/C SWITCH FUSE or PNK/BLK wire between BLOWER SPEED SELECTOR SWITCH and A/C SWITCH.
		Test lamp lights.	GO TO **A14.**
A14.	Backprobe A/C SWITCH connector with a test lamp from cavity 2 to chassis ground.	Test lamp does not light.	Replace A/C SWITCH.
		Test lamp lights.	GO TO **A15.**
A15.	Connect a test lamp from A/C AMPLIFIER connector cavity 11 to chassis ground.	Test lamp does not light.	Repair open in BLU wire between A/C AMPLIFIER and A/C SWITCH.
		Test lamp lights.	GO TO **A16.**

HVAC: COMPRESSOR CONTROL

SYSTEM DIAGNOSIS

HVAC: COMPRESSOR CONTROL	DIAGNOSTIC CHART A (CONT'D)		
	TEST	RESULT	ACTION
A16.	Connect a digital multimeter from A/C AMPLIFIER connector cavity 12 to chassis ground. Measure resistance.	More than 5.0 ohms.	GO TO **A17.**
		Less than 5.0 ohms.	GO TO **A18.**
A17.	Backprobe ENGINE COOLANT TEMPERATURE (ECT) SWITCH connector with a digital multimeter from connector cavity to chassis ground. Measure resistance.	More than 5.0 ohms.	Replace ENGINE COOLANT TEMPERATURE (ECT) SWITCH.
		Less than 5.0 ohms.	Repair open in YEL/BLU wire between ENGINE COOLANT TEMPERATURE (ECT) SENSOR and A/C AMPLIFIER.
A18.	Turn IGNITION SWITCH to "LOCK." Connect a test lamp from A/C AMPLIFIER connector cavity 2 to chassis ground.	Test lamp does not light.	GO TO **A23.**
		Test lamp lights.	GO TO **A19** with Automatic Transmission. GO TO **A21** with Manual Transmission.
A19.	Disconnect PARK/NEUTRAL POSITION SWITCH connector. Connect a test lamp from A/C AMPLIFIER connector cavity 2 to chassis ground.	Test lamp lights.	Repair short to voltage in BLK/YEL wire between PARK/NEUTRAL POSITION SWITCH and A/C AMPLIFIER.
		Test lamp does not light.	GO TO **A20.**
A20.	Disconnect IGNITION SWITCH connector. Connect a test lamp from PARK/NEUTRAL POSITION SWITCH connector C1 cavity 1 to chassis ground.	Test lamp lights.	Repair short to voltage in BLK/RED wire between PARK/NEUTRAL POSITION SWITCH and IGNITION SWITCH.
		Test lamp does not light.	Replace IGNITION SWITCH.
A21.	Disconnect CLUTCH PEDAL POSITION (CPP) SWITCH connector (C208). Connect a test lamp from A/C AMPLIFIER connector cavity 2 to chassis ground.	Test lamp lights.	Repair short to voltage in BLK/YEL wire between CLUTCH PEDAL POSITION (CPP) SWITCH and A/C AMPLIFIER.
		Test lamp does not light.	GO TO **A22.**
A22.	Disconnect IGNITION SWITCH connector. Connect a test lamp from CLUTCH PEDAL POSITION (CPP) SWITCH connector (C208) cavity 1 to chassis ground.	Test lamp lights.	Repair short to voltage in BLK/RED wire between CLUTCH PEDAL POSITION (CPP) SWITCH and IGNITION SWITCH.
		Test lamp does not light.	Replace IGNITION SWITCH.

HVAC: COMPRESSOR CONTROL

SYSTEM DIAGNOSIS

HVAC: COMPRESSOR CONTROL — DIAGNOSTIC CHART A (CONT'D)

	TEST	RESULT	ACTION
A23.	Connect a digital multimeter from A/C AMPLIFIER connector cavity 10 to connector cavity 4. Measure resistance.	Less than 2000 ohms.	Replace A/C AMPLIFIER.
		More than 2000 ohms.	GO TO **A24.**
A24.	Disconnect EVAPORATOR THERMISTOR connector. Connect a digital multimeter from EVAPORATOR THERMISTOR connector cavity 2 to A/C AMPLIFIER connector cavity 10. Measure resistance.	More than 5.0 ohms.	Repair open in YEL/GRN wire between A/C AMPLIFIER and EVAPORATOR THERMISTOR.
		Less than 5.0 ohms.	GO TO **A25.**
A25.	Connect a digital multimeter from A/C AMPLIFIER connector cavity 4 to EVAPORATOR THERMISTOR connector cavity 1. Measure resistance.	More than 5.0 ohms.	Repair open in WHT/BLU wire.
		Less than 5.0 ohms.	Replace EVAPORATOR THERMISTOR.
A26.	Disconnect A/C AMPLIFIER connector.	A/C COMPRESSOR CLUTCH is still engaged.	Check for a short to ground in PNK wire between A/C COMPRESSOR CLUTCH RELAY and A/C AMPLIFIER. Check for a short to voltage in BLK/WHT wire between A/C COMPRESSOR CLUTCH RELAY and A/C COMPRESSOR CLUTCH. If both are OK, replace A/C COMPRESSOR CLUTCH RELAY.
		A/C COMPRESSOR CLUTCH is disengaged.	GO TO **A27.**
A27.	Make sure A/C SWITCH is OFF. Connect a test lamp from A/C AMPLIFIER connector cavity 11 to chassis ground.	Test lamp does not light.	Replace A/C AMPLIFIER.
		Test lamp lights.	Check for a short to voltage in BLU wire between A/C SWITCH and A/C AMPLIFIER. If OK, replace A/C SWITCH.

HVAC: COMPRESSOR CONTROL

For component replacement procedures, refer to the section listed below.

COMPONENT	SECTION
A/C Amplifier	Section 1B
A/C Compressor Clutch	Section 1D
A/C Compressor Clutch Relay	Section 1B
A/C Switch	Section 1B
Blower Speed Selector Switch	Section 1A
Dual Pressure Switch	Section 1B
Engine Coolant Temperature (ECT) Switch	Section 1B
Evaporator Thermistor	Section 1B
Ignition Switch (without tilt wheel)	Section 3F1
Ignition Switch (with tilt wheel)	Section 3F2

CIRCUIT OPERATION

The A/C AMPLIFIER is powered by voltage from the HEATER Fuse and permanently grounded at G201.

With the IGNITION SWITCH, BLOWER SPEED SELECTOR SWITCH and A/C SWITCH in the "ON" position, an "A/C REQUEST" signal is applied to the A/C AMPLIFIER through the BLOWER SPEED SELECTOR SWITCH, A/C SWITCH FUSE and A/C SWITCH. This prompts the A/C AMPLIFIER to supply the ENGINE CONTROL MODULE (ECM) with an "Idle-Up Signal."

The DUAL PRESSURE SWITCH closes when the pressure in the A/C system is between 207 kPa (30 psi) and 2641 kPa (384 psi). Voltage is then provided to the A/C COMPRESSOR CLUTCH RELAY coil. Whenever the pressure in the A/C system drops below 207 kPa (30 psi) or rises above 2641 kPa (384 psi), the DUAL PRESSURE SWITCH opens, the A/C COMPRESSOR CLUTCH RELAY is de-energized, and voltage to the A/C COMPRESSOR CLUTCH is interrupted. These conditions arise only under extreme circumstances and when a fault is present, such as a low refrigerant charge.

The ENGINE COOLANT TEMPERATURE (ECT) SWITCH opens when the engine coolant temperature rises above 113°C (235°F). This signal warns the A/C AMPLIFIER that the engine is overheating so that the A/C AMPLIFIER will cut out the A/C COMPRESSOR CLUTCH in order to reduce engine load.

The A/C COMPRESSOR CLUTCH RELAY coil is grounded through the A/C AMPLIFIER at G201, provided that the A/C AMPLIFIER has not received a low temperature signal from the EVAPORATOR THERMISTOR or a high temperature signal from the ENGINE

HVAC: COMPRESSOR CONTROL

COOLANT TEMPERATURE (ECT) SWITCH and the DUAL PRESSURE SWITCH is closed.

When the relay is energized through the DUAL PRESSURE SWITCH, Battery voltage is applied to the A/C COMPRESSOR CLUTCH through the A/C FUSE and the contacts of the A/C COMPRESSOR CLUTCH RELAY. Since the A/C COMPRESSOR CLUTCH is permanently case grounded, the clutch engages and the compressor operates.

The A/C AMPLIFIER monitors the EVAPORATOR THERMISTOR mounted inside the evaporator housing. The EVAPORATOR THERMISTOR converts evaporator core temperature into a resistance value. Using this resistance value, the A/C AMPLIFIER can sense when evaporator temperature drops below 0°C (32°F). When this occurs, the A/C AMPLIFIER removes the A/C COMPRESSOR CLUTCH RELAY coil ground. This prevents evaporator frost and ice build-up which reduces air flow and reduces the unit's cooling capacity.

The A/C AMPLIFIER also receives a crank signal from the IGNITION SWITCH through the PARK/NEUTRAL POSITION SWITCH (automatic transmission) or the CLUTCH PEDAL POSITION (CPP) SWITCH (manual transmission). When the A/C AMPLIFIER receives this signal, it disengages the A/C COMPRESSOR CLUTCH to allow maximum cranking.

HVAC: COMPRESSOR CONTROL

A/C AMPLIFIER CONNECTOR

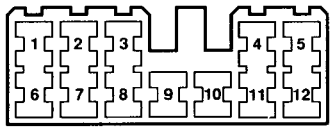

NATURAL

WIRING DETAIL LEGEND

CAVITY	WIRE COLOR	CIRCUIT
1	YEL/BLK	ECM – Idle-Up Control
2	BLK/YEL	Ignition Switch – Crank Signal
3	—	Not Used
4	WHT/BLU	Evaporator Temperature Input
5	—	Not Used
6	BLU/RED	A/C Condenser Fan Relay Control
7	PNK	A/C Compressor Clutch Relay Control
8	LT GRN	12V Power Input from HEATER Fuse
9	BLK	Ground – G200/G201
10	YEL/GRN	Evaporator Thermistor Ground
11	BLU	A/C Switch – A/C Request Signal
12	YEL/BLU	Engine Coolant Temperature Signal

BLANK

AUDIBLE WARNINGS

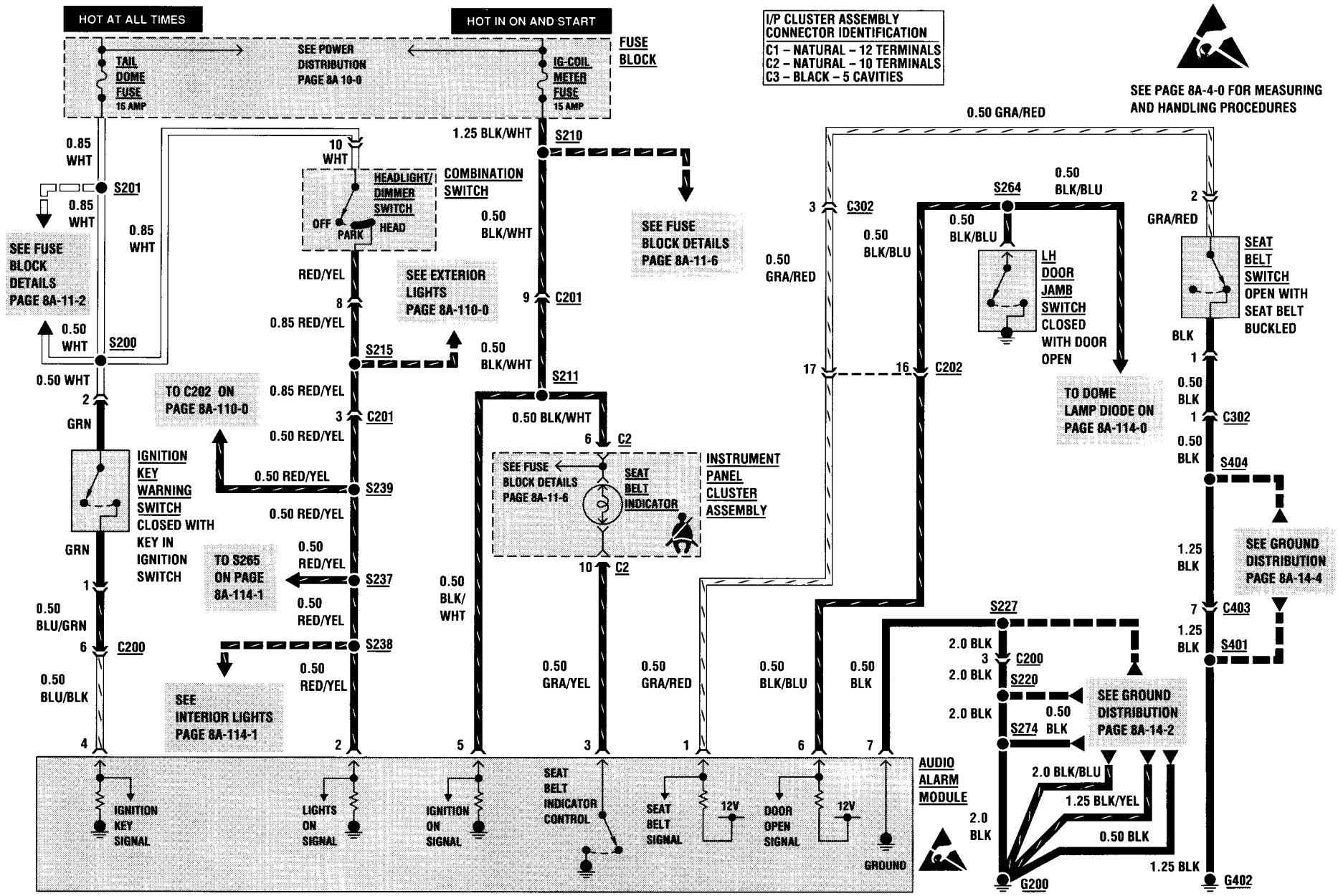

AUDIBLE WARNINGS

COMPONENT	LOCATION	FIGURE	CONNECTOR
Audio Alarm Module	Behind I/P above RH Front Speaker	201-06/A	76-08
Combination Switch	On Steering Column	201-05/A	202-00/A1
Fuse Block	Under I/P left of Steering Column	201-05/A	
Ignition Key Warning Switch	RH side of Steering Column	201-05/A	
Instrument Panel Cluster Assembly	LH I/P	201-06/A	
C2 (10 Terminals)	I/P Harness to I/P Cluster Assembly, behind I/P Cluster Assembly	201-06/A	81-08
LH Door Jamb Switch	Bottom LH Door Frame	201-07/A	
Seat Belt Switch	On floor of Passenger Compartment in Seat Belt Latch	201-07/A	
C200 (22 Cavities)	I/P Harness to Main Harness, behind I/P left of Steering Column	201-05/A	202-01/A1
C201 (10 Cavities)	I/P Harness to Main Harness, behind I/P left of Steering Column	201-05/A	202-02/A1
C202 (20 Cavities)	I/P Harness to Floor Harness 1, behind I/P left of Steering Column	201-06/A	202-03/A1
C302 (3 Cavities)	Floor Harness 1 to Floor Harness 2, behind LH Rear Passenger Compartment Trim Panel	201-07/A	
C403 (12 Cavities)	Floor Harness to Rear Lamp Harness, behind LH Rear Wheelhousing	201-08/A	202-05/A2
S200	Main Harness, behind I/P left of Steering Column	201-05/A	
S201	Main Harness, behind I/P left of Steering Column	201-05/A	
S210	Main Harness, behind LH I/P near Fuse Block	201-05/A	
S211	I/P Harness, behind I/P near LH Front Speaker	201-06/A	
S215	Main Harness, behind I/P left of Steering Column	201-05/A	
S220	Main Harness, behind I/P left of Steering Column	201-05/A	
S227	I/P Harness, behind Center I/P near Radio	201-06/A	
S237	I/P Harness, behind LH I/P in I/P Cluster Branch	201-06/A	
S238	I/P Harness, behind LH I/P in I/P Cluster Branch	201-06/A	
S239	I/P Harness, behind I/P near LH Front Speaker	201-06/A	
S264	I/P Harness, behind I/P near LH Front Speaker	201-06/A	
S274	Main Harness, behind LH I/P near ECM	201-05/A	
S401	Rear Lamp Harness, near LH Rear Combination Lamp	201-08/A	
S404	Floor Harness 1, near LH Rear Combination Lamp	201-07/A	
G200	Behind LH I/P above Fuse Block	201-05/A	
G402	Behind LH Rear Wheelhousing	201-08/A	

AUDIBLE WARNINGS

TROUBLESHOOTING HINTS

1. Check TAIL DOME Fuse by listening to radio.
2. Check IG COIL METER Fuse by starting vehicle.
3. Check that grounds G200 and G402 are clean and tight.

SYSTEM DIAGNOSIS

AUDIBLE WARNINGS	DIAGNOSTIC CHART A		
	TEST	RESULT	ACTION
A1.	Open LH door. Insert ignition key into ignition lock cylinder.	Alarm sounds.	GO TO **A2.**
		Alarm does not sound.	GO TO **A8.**
A2.	Close LH door.	Alarm stops.	GO TO **A3.**
		Alarm continues to sound.	GO TO **A14.**
A3.	Open LH door and remove ignition key.	Alarm does not sound.	GO TO **A4.**
		Alarm sounds.	GO TO **A16.**
A4.	Insert ignition key into ignition switch. Turn ignition switch to "ON." Leave seat belt unbuckled.	Alarm sounds and Seat Belt Indicator lights.	GO TO **A5.**
		Alarm does not sound and Seat Belt Indicator does not light.	GO TO **A18.**
		Alarm sounds but Seat Belt Indicator does not light.	GO TO **A30.**
		Seat Belt Indicator lights but alarm does not sound.	Replace AUDIO ALARM MODULE.
A5.	Fasten seat belt while alarm is sounding.	Alarm stops and Seat Belt Indicator goes out.	GO TO **A6.**
		Alarm does not stop and Seat Belt Indicator does not go out.	GO TO **A22.**
		Alarm stops but Seat Belt Indicator remains lit.	GO TO **A32.**
		Seat Belt Indicator goes out but Alarm does not stop.	Replace AUDIO ALARM MODULE.

AUDIBLE WARNINGS

SYSTEM DIAGNOSIS

AUDIBLE WARNINGS — DIAGNOSTIC CHART A (CONT'D)

	TEST	RESULT	ACTION
A6.	Turn Headlight Switch to "ON." Turn ignition switch to "OFF" and remove ignition key.	Alarm sounds.	GO TO **A7.**
		Alarm does not sound.	GO TO **A24.**
A7.	Turn Headlight Switch to "OFF."	Alarm stops.	All systems diagnosed in this cell are functioning normally.
		Alarm continues to sound.	GO TO **A27.**
A8.	Backprobe IGNITION KEY WARNING SWITCH connector with a test lamp from cavity 2 to chassis ground.	Test lamp does not light.	Repair open in WHT wire between FUSE BLOCK and IGNITION KEY WARNING SWITCH.
		Test lamp lights.	GO TO **A9.**
A9.	Fully insert ignition key into ignition lock cylinder. Disconnect IGNITION KEY WARNING SWITCH connector. Connect a digital multimeter across IGNITION KEY WARNING SWITCH terminals. Measure resistance.	More than 0.3 ohms.	Replace IGNITION KEY WARNING SWITCH.
		Less than 0.3 ohms.	Reconnect IGNITION KEY WARNING SWITCH and GO TO **A10.**
A10.	Backprobe AUDIO ALARM MODULE connector with a test lamp from cavity 4 to chassis ground.	Test lamp does not light.	Repair open in BLU/BLK or BLU/GRN wire between AUDIO ALARM MODULE and IGNITION KEY WARNING SWITCH.
		Test lamp lights.	GO TO **A11.**
A11.	Disconnect AUDIO ALARM MODULE connector. Connect a digital multimeter from connector cavity 7 to chassis ground. Measure resistance.	More than 0.3 ohms.	Repair BLK ground wire between AUDIO ALARM MODULE and G200.
		Less than 0.3 ohms.	GO TO **A12.**
A12.	Connect a digital multimeter from AUDIO ALARM MODULE connector cavity 6 to chassis ground with LH door open. Measure resistance.	Less than 0.3 ohms.	Replace AUDIO ALARM MODULE.
		More than 0.3 ohms.	GO TO **A13.**
A13.	Remove LH DOOR JAMB SWITCH. Disconnect LH DOOR JAMB SWITCH connector. Connect a digital multimeter from LH DOOR JAMB SWITCH connector to AUDIO ALARM MODULE connector cavity 6. Measure resistance.	More than 0.3 ohms.	Repair open in BLK/BLU wire between AUDIO ALARM MODULE and LH DOOR JAMB SWITCH.
		Less than 0.3 ohms.	Replace LH DOOR JAMB SWITCH.
A14.	Remove LH DOOR JAMB SWITCH.	Alarm stops.	Replace LH DOOR JAMB SWITCH.
		Alarm continues to sound.	GO TO **A15.**

SYSTEM DIAGNOSIS

AUDIBLE WARNINGS — DIAGNOSTIC CHART A (CONT'D)

	TEST	RESULT	ACTION
A15.	Disconnect AUDIO ALARM MODULE connector. Connect a digital multimeter from connector cavity 6 to chassis ground. Measure resistance.	Infinite.	Replace AUDIO ALARM MODULE.
		Less than infinite.	Repair short to ground in BLK/BLU wire.
A16.	Disconnect IGNITION KEY WARNING SWITCH connector.	Alarm stops.	Replace IGNITION KEY WARNING SWITCH.
		Alarm continues to sound.	GO TO **A17.**
A17.	Disconnect AUDIO ALARM MODULE connector. Connect a test lamp from connector cavity 4 to chassis ground.	Test lamp does not light.	Replace AUDIO ALARM MODULE.
		Test lamp lights.	Repair short to voltage in BLU/BLK or BLU/GRN wire between IGNITION KEY WARNING SWITCH and AUDIO ALARM MODULE.
A18.	Backprobe AUDIO ALARM MODULE connector with a test lamp from cavity 5 to chassis ground.	Test lamp does not light.	Repair open in BLK/WHT wire between FUSE BLOCK and S211.
		Test lamp lights.	GO TO **A19.**
A19.	Disconnect AUDIO ALARM MODULE. Connect a digital multimeter from connector cavity 1 to chassis ground. Measure resistance.	Less than 0.3 ohms.	Replace AUDIO ALARM MODULE.
		More than 0.3 ohms.	GO TO **A20.**
A20.	Backprobe SEAT BELT SWITCH connector with a digital multimeter from cavity 2 to chassis ground. Measure resistance.	Less than 0.3 ohms.	Repair open in GRA/RED wire between AUDIO ALARM MODULE and SEAT BELT SWITCH.
		More than 0.3 ohms.	GO TO **A21.**
A21.	Backprobe SEAT BELT SWITCH connector with a digital multimeter from cavity 1 to chassis ground. Measure resistance.	Less than 0.3 ohms.	Replace Seat Belt Buckle.
		More than 0.3 ohms.	Repair open in BLK ground wire between SEAT BELT SWITCH and G402.
A22.	Disconnect SEAT BELT SWITCH connector.	Alarm stops and Seat Belt Indicator goes out.	Replace Seat Belt Buckle.
		Alarm continues to sound and Seat Belt Indicator remains lit.	GO TO **A23.**

AUDIBLE WARNINGS

SYSTEM DIAGNOSIS

AUDIBLE WARNINGS — DIAGNOSTIC CHART A (CONT'D)

	TEST	RESULT	ACTION
A23.	Disconnect AUDIO ALARM MODULE connector. Connect a digital multimeter from cavity 1 to chassis ground. Measure resistance.	Less than infinite.	Repair short to ground in GRA/RED wire between AUDIO ALARM MODULE and SEAT BELT SWITCH.
		Infinite.	Replace AUDIO ALARM MODULE.
A24.	Backprobe AUDIO ALARM MODULE connector with a test lamp from cavity 2 to chassis ground.	Test lamp lights.	Replace AUDIO ALARM MODULE.
		Test lamp does not light.	GO TO **A25.**
A25.	Backprobe COMBINATION SWITCH connector with a test lamp from cavity 8 to chassis ground.	Test lamp lights.	Repair open in RED/YEL wire between COMBINATION SWITCH and AUDIO ALARM MODULE.
		Test lamp does not light.	GO TO **A26.**
A26.	Backprobe COMBINATION SWITCH connector with a test lamp from cavity 10 to chassis ground.	Test lamp lights.	Replace COMBINATION SWITCH.
		Test lamp does not light.	Repair open in WHT wire between S200 and COMBINATION SWITCH.
A27.	Disconnect COMBINATION SWITCH and AUDIO ALARM MODULE connectors. Connect a test lamp from COMBINATION SWITCH connector terminal 8 to chassis ground.	Test lamp lights.	Repair short to voltage in RED/YEL wire.
		Test lamp does not light.	GO TO **A28.**
A28.	Connect a test lamp from AUDIO ALARM MODULE connector cavity 5 to chassis ground.	Test lamp lights.	Repair short to voltage in BLK/WHT wire.
		Test lamp does not light.	GO TO **A29.**
A29.	Connect a digital multimeter from COMBINATION SWITCH cavity 10 to cavity 8 (switch side). Measure resistance.	Less than infinite.	Replace COMBINATION SWITCH.
		Infinite.	Replace AUDIO ALARM MODULE.
A30.	Disconnect AUDIO ALARM MODULE. Connect a fused jumper from connector cavity 3 to chassis ground.	Seat Belt Indicator lights.	Replace AUDIO ALARM MODULE.
		Seat Belt Indicator does not light.	GO TO **A31.**

AUDIBLE WARNINGS

SYSTEM DIAGNOSIS

AUDIBLE WARNINGS	DIAGNOSTIC CHART A (CONT'D)		
	TEST	RESULT	ACTION
A31.	Backprobe INSTRUMENT PANEL CLUSTER ASSEMBLY connector C2 with a test lamp from terminal 6 to chassis ground.	Test lamp does not light.	Repair open in BLK/WHT wire between INSTRUMENT PANEL CLUSTER ASSEMBLY and S211.
		Test lamp lights.	Repair open in GRA/YEL wire or INSTRUMENT PANEL CLUSTER printed circuit.
A32.	Disconnect AUDIO ALARM MODULE.	Seat Belt Indicator remains lit.	Repair short to ground in GRA/YEL wire or INSTRUMENT PANEL CLUSTER ASSEMBLY PRINTED CIRCUIT.
		Seat Belt Indicator goes out.	Replace AUDIO ALARM MODULE.

For component replacement procedures, refer to the section listed below.

COMPONENT	SECTION
Audio Alarm Module	Section 8C
Combination Switch (without tilt wheel)	Section 3F1
Combination Switch (with tilt wheel)	Section 3F2
Ignition Key Warning Switch (without tilt wheel)	Section 3F1
Ignition Key Warning Switch (with tilt wheel)	Section 3F2
Instrument Panel Cluster Printed Circuit	Section 8C
LH Door Jamb Switch	Section 10-5
Seat Belt Buckle	Section 10-11

AUDIBLE WARNINGS

CIRCUIT OPERATION

IGNITION KEY WARNING ALARM

Battery voltage is applied through the TAIL DOME Fuse at all times to the IGNITION KEY WARNING SWITCH. When the ignition key is inserted into the ignition lock cylinder, the IGNITION KEY WARNING SWITCH is closed, and a voltage signal is provided to the AUDIO ALARM MODULE. If the LH door is opened, the LH DOOR JAMB SWITCH closes and a ground signal is provided to the AUDIO ALARM MODULE. When these two signals are received simultaneously, the AUDIO ALARM MODULE activates the ignition key warning alarm.

SEAT BELT INDICATOR

The AUDIO ALARM MODULE receives battery voltage through the IG-COIL METER Fuse whenever the ignition switch is in the "ON" or "START" position. If the driver's seat belt is not buckled, a ground signal is provided to the AUDIO ALARM MODULE through the SEAT BELT SWITCH to G402. When the module receives an ignition ON signal indicating that the ignition switch is in "ON" or "START," and the SEAT BELT SWITCH is closed simultaneously, the AUDIO ALARM MODULE provides a ground for the Seat Belt Indicator, which receives battery voltage from the IG-COIL METER Fuse.

HEADLIGHT WARNING ALARM

Battery voltage is applied at all times from the TAIL DOME Fuse to the COMBINATION SWITCH. If the Headlight Switch is closed, voltage is applied to the AUDIO ALARM MODULE. A voltage signal is also received by the AUDIO ALARM MODULE from the IG-COIL METER Fuse if the ignition switch is in "ON" or "START." If the AUDIO ALARM MODULE sees the ignition signal go from "ON" to "OFF" while receiving a lights ON signal, it sounds the headlight alarm.

AUDIO ALARM MODULE CONNECTOR

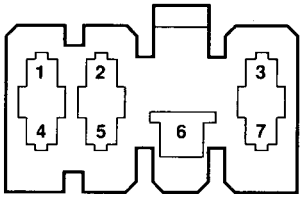

NATURAL

WIRING DETAIL LEGEND

CAVITY	WIRE COLOR	CIRCUIT
1	GRA/RED	Seat Belt Signal
2	RED/YEL	Lights On Signal
3	GRA/YEL	Seat Belt Indicator Control
4	BLU/BLK	Ignition Key Signal
5	BLK/WHT	Ignition On Signal
6	BLK/BLU	Door Open Signal
7	BLK	Ground – G200/G201

BLANK

INSTRUMENT PANEL: WITH GAGES

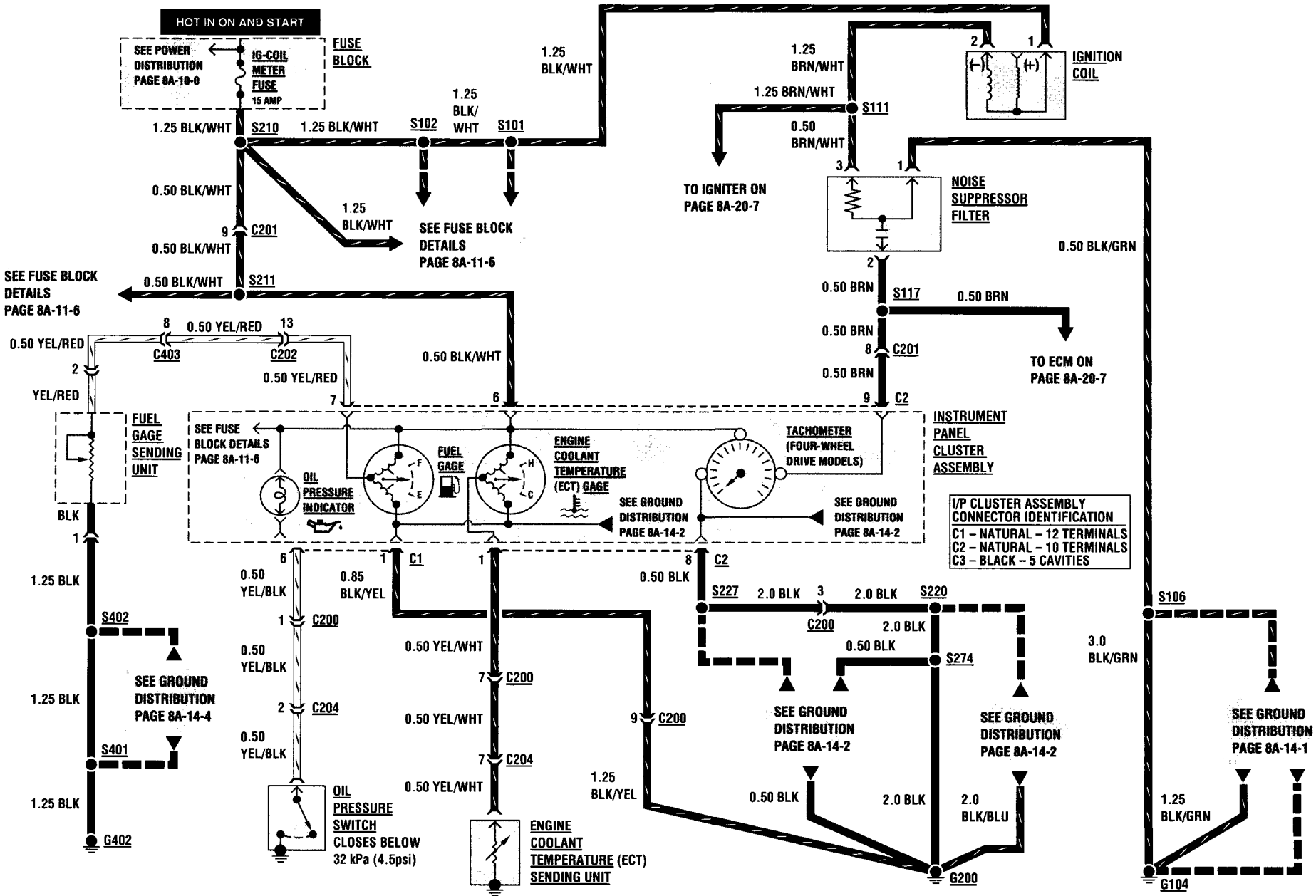

INSTRUMENT PANEL: WITH GAGES

COMPONENT	LOCATION	FIGURE	CONNECTOR
Engine Coolant Temperature (ECT) Sending Unit	In Thermostat Housing	201-04/A	
Fuel Gage Sending Unit	In Fuel Tank	201-08/A	
Fuse Block	Under I/P left of Steering Column	201-05/A	
Ignition Coil	LH Rear Engine Compartment on Bulkhead	201-03/A	
Instrument Panel Cluster Assembly	LH I/P	201-06/A	
C1 (12 Terminals)	I/P Harness to I/P Cluster Assembly, behind I/P Cluster Assembly	201-06/A	81-08
C2 (10 Terminals)	I/P Harness to I/P Cluster Assembly, behind I/P Cluster Assembly	201-06/A	81-08
Noise Suppressor Filter	LH Rear Engine Compartment below Front Wiper Motor	201-03/A	
Oil Pressure Switch	LH side of Engine above oil filter	201-04/A	
C200 (22 Cavities)	I/P Harness to Main Harness, behind I/P left of Steering Column	201-05/A	202-01/A1
C201 (10 Cavities)	I/P Harness to Main Harness, behind I/P left of Steering Column	201-05/A	202-02/A1
C202 (20 Cavities)	I/P Harness to Floor Harness 1, behind I/P left of Steering Column	201-06/A	202-03/A1
C204 (22 Cavities)	Main Harness to Engine Harness, behind I/P left of Steering Column	201-05/A	202-04/A1
C403 (12 Cavities)	Floor Harness 1 to Rear Lamp Harness, behind LH Rear Wheelhousing	201-08/A	202-05/A2
S101	Main Harness, at Bulkhead near Front Wiper Motor	201-03/A	
S102	Main Harness, at Bulkhead near Front Wiper Motor	201-03/A	
S106	Main Harness, at Bulkhead near Ignition Coil	201-03/A	
S111	Main Harness, LH Rear Engine Compartment near Bulkhead Grommet	201-03/A	
S117	Main Harness, at Bulkhead near Front Wiper Motor	201-03/A	
S210	Main Harness, behind LH I/P near Fuse Block	201-05/A	
S211	I/P Harness, behind I/P near LH Front Speaker	201-06/A	
S220	Main Harness, behind I/P left of Steering Column	201-05/A	
S227	I/P Harness, behind Center I/P near Radio	201-06/A	
S274	Main Harness, behind LH I/P near ECM	201-05/A	
S401	Rear Lamp Harness, near LH Rear Combination Lamp	201-08/A	
S402	Rear Lamp Harness, near RH Rear Combination Lamp	201-08/A	

INSTRUMENT PANEL: WITH GAGES

COMPONENT	LOCATION	FIGURE CONNECTOR
G104	LH Rear Engine Compartment on LH side of Bulkhead	201-03/A
G200	Behind LH I/P above Fuse Block	201-05/A
G402	Behind LH Rear Wheelhousing	201-08/A

TROUBLESHOOTING HINTS

1. Check IG-COIL METER Fuse by starting vehicle.
2. Check that grounds G104, G200 and G402 are clean and tight.
3. Check that the engine coolant level is adequate for Engine Coolant Temperature (ECT) Gage operation.
4. Check that engine oil level is adequate for Oil Pressure Indicator operation.
5. If the Oil Pressure Indicator remains lit with the engine running, refer to SECTION 6 to check for proper oil pressure.
6. If the INSTRUMENT PANEL CLUSTER ASSEMBLY appears completely inoperative, check for an open in the BLK/WHT wire between the FUSE BLOCK and the INSTRUMENT PANEL CLUSTER ASSEMBLY.
7. If the INSTRUMENT PANEL CLUSTER ASSEMBLY appears partially inoperative:
   - Check for an open in the BLK ground wire between the INSTRUMENT PANEL CLUSTER ASSEMBLY and G200.
   - Check for an open in the BLK/YEL wire between the INSTRUMENT PANEL CLUSTER ASSEMBLY and G200.
   - Check the INSTRUMENT PANEL CLUSTER printed circuit for cracks and bad connections. If printed circuit is damaged, refer to SECTION 8C for proper replacement procedure.

SYSTEM DIAGNOSIS

INSTRUMENT PANEL: WITH GAGES	DIAGNOSTIC CHART A		
	TEST	RESULT	ACTION
A1.	Turn ignition switch to "ON."	Oil Pressure Indicator lights.	GO TO **A2.**
		Oil Pressure Indicator does not light.	GO TO **A6.**
A2.	Start engine.	Oil Pressure Indicator goes out.	GO TO **A3.**
		Oil Pressure Indicator remains lit.	GO TO **A8.**

INSTRUMENT PANEL: WITH GAGES

SYSTEM DIAGNOSIS

INSTRUMENT PANEL: WITH GAGES — DIAGNOSTIC CHART A (CONT'D)

	TEST	RESULT	ACTION
A3.	Check Fuel Gage operation.	Fuel Gage indicates correct fuel level.	GO TO **A4.**
		Fuel Gage indicates "E" at all times.	GO TO **A9.**
		Fuel Gage indicates "F" at all times.	GO TO **A12.**
A4.	Run engine until normal operating temperature is attained. Check Engine Coolant Temperature (ECT) Gage.	Engine Coolant Temperature (ECT) Gage indicates correct engine coolant temperature.	Two-Wheel Drive Vehicles — All systems in this cell are functioning normally. Four-Wheel Drive Vehicles — GO TO **A5.**
		Engine Coolant Temperature (ECT) Gage indicates "C" at all times.	GO TO **A14.**
		Engine Coolant Temperature (ECT) Gage indicates "H" at all times.	GO TO **A16.**
A5.	With engine running, check Tachometer operation.	Tachometer indicates engine rpm.	All systems in this cell are functioning normally.
		Tachometer does not indicate engine rpm.	GO TO **A18.**
A6.	Disconnect OIL PRESSURE SWITCH connector. Connect a fused jumper from OIL PRESSURE SWITCH connector to chassis ground.	Oil Pressure Indicator lights.	Replace OIL PRESSURE SWITCH.
		Oil Pressure Indicator does not light.	GO TO **A7.**
A7.	Disconnect INSTRUMENT PANEL CLUSTER ASSEMBLY connector C1. Connect a digital multimeter from connector C1 terminal 6 to chassis ground. Measure resistance.	More than 0.5 ohms.	Repair open in YEL/BLK wire between INSTRUMENT PANEL CLUSTER ASSEMBLY and OIL PRESSURE SWITCH.
		Less than 0.5 ohms.	Check INSTRUMENT PANEL CLUSTER printed circuit for cracks and bad connections. If printed circuit is defective, replace. If no defects are found, replace Oil Pressure Indicator.
A8.	Disconnect OIL PRESSURE SWITCH connector.	Oil Pressure Indicator remains lit.	Repair short to ground in YEL/BLK wire or INSTRUMENT PANEL CLUSTER printed circuit.
		Oil Pressure Indicator goes out.	Replace OIL PRESSURE SWITCH.

SYSTEM DIAGNOSIS

INSTRUMENT PANEL: WITH GAGES — DIAGNOSTIC CHART A (CONT'D)

	TEST	RESULT	ACTION
A9.	Disconnect FUEL GAGE SENDING UNIT connector. Connect a digital multimeter from connector terminal 1 to chassis ground. Measure resistance.	More than 3.0 ohms.	Repair open in BLK wire between FUEL GAGE SENDING UNIT and G402.
		Less than 3.0 ohms.	GO TO **A10.**
A10.	Connect a fused jumper from FUEL GAGE SENDING UNIT connector terminal 2 to chassis ground.	Fuel Gage indicates "F."	Replace FUEL GAGE SENDING UNIT.
		Fuel Gage continues to indicate "E."	Leave jumper connected and GO TO **A11.**
A11.	Disconnect INSTRUMENT PANEL CLUSTER ASSEMBLY connector C2. Connect a digital multimeter from connector C2 terminal 7 to chassis ground. Measure resistance.	More than 3.0 ohms.	Repair open in YEL/RED wire between Fuel Gage and FUEL TANK SENDING UNIT.
		Less than 3.0 ohms.	Check INSTRUMENT PANEL CLUSTER printed circuit for cracks and bad connections. If printed circuit is defective, replace. If no defects are found, replace Fuel Gage.
A12.	Disconnect FUEL GAGE SENDING UNIT connector.	Fuel Gage indicates "E."	Replace FUEL GAGE SENDING UNIT.
		Fuel Gage continues to indicate "F."	GO TO **A13.**
A13.	Disconnect INSTRUMENT PANEL CLUSTER ASSEMBLY connector C2. Connect a digital multimeter from connector C2 terminal 7 to chassis ground.	Less than infinite.	Repair short to ground in YEL/RED wire between INSTRUMENT PANEL CLUSTER ASSEMBLY and FUEL GAGE SENDING UNIT.
		Infinite.	Check INSTRUMENT PANEL CLUSTER printed circuit for cracks and bad connections. If printed circuit is defective, replace. If no defects are found, replace Fuel Gage.
A14.	Disconnect ENGINE COOLANT TEMPERATURE (ECT) SENDING UNIT connector. Connect a fused jumper from connector cavity to chassis ground.	ECT Gage indicates "H."	Replace ENGINE COOLANT TEMPERATURE (ECT) SENDING UNIT.
		ECT Gage still indicates "C."	Leave jumper connected and GO TO **A15.**

INSTRUMENT PANEL: WITH GAGES

SYSTEM DIAGNOSIS

INSTRUMENT PANEL: WITH GAGES — DIAGNOSTIC CHART A (CONT'D)

	TEST	RESULT	ACTION
A15.	Disconnect INSTRUMENT PANEL CLUSTER ASSEMBLY connector C2. Connect a digital multimeter from connector C2 terminal 1 to chassis ground. Measure resistance.	More than 3.0 ohms.	Repair open in YEL/WHT wire between INSTRUMENT PANEL CLUSTER ASSEMBLY and ENGINE COOLANT TEMPERATURE (ECT) SENDING UNIT.
		Less than 3.0 ohms.	Check INSTRUMENT PANEL CLUSTER printed circuit for cracks and bad connections. If printed circuit is defective, replace. If no defects are found, replace ECT Gage.
A16.	Disconnect ENGINE COOLANT TEMPERATURE (ECT) SENDING UNIT connector.	ECT Gage indicates "C."	Replace ENGINE COOLANT TEMPERATURE (ECT) SENDING UNIT.
		ECT Gage still indicates "H."	GO TO **A17.**
A17.	Disconnect INSTRUMENT PANEL CLUSTER ASSEMBLY connector C2. Connect a digital multimeter from connector cavity 1 to chassis ground. Measure resistance.	Infinite.	Check INSTRUMENT PANEL CLUSTER printed circuit for cracks and bad connections. If printed circuit is defective, replace. If no defects are found, replace ECT Gage.
		Less than infinite.	Repair short to ground in YEL/WHT wire between INSTRUMENT PANEL CLUSTER ASSEMBLY and ENGINE COOLANT TEMPERATURE (ECT) SENDING UNIT.
A18.	Turn ignition switch to "OFF." Disconnect INSTRUMENT PANEL CLUSTER ASSEMBLY connector C2. Connect a digital multimeter from connector C2 cavity 8 to chassis ground. Measure resistance.	More than 0.3 ohms.	Repair open in BLK wire between INSTRUMENT PANEL CLUSTER ASSEMBLY and G200.
		Less than 0.3 ohms.	GO TO **A19.**
A19.	Disconnect IGNITION COIL and NOISE SUPPRESSOR FILTER connectors. Connect a digital multimeter from IGNITION COIL connector cavity 2 to NOISE SUPPRESSOR FILTER connector cavity 3. Measure resistance.	More than 0.3 ohms.	Repair open in BRN/WHT wire between IGNITION COIL and NOISE SUPPRESSOR FILTER.
		Less than 0.3 ohms.	GO TO **A20.**

SYSTEM DIAGNOSIS

INSTRUMENT PANEL: WITH GAGES — DIAGNOSTIC CHART A (CONT'D)

	TEST	RESULT	ACTION
A20.	Connect a digital multimeter from NOISE SUPPRESSOR FILTER connector cavity 2 to INSTRUMENT PANEL CLUSTER ASSEMBLY connector C2 cavity 9. Measure resistance.	More than 0.5 ohms.	Repair open in BRN wire between NOISE SUPPRESSOR FILTER and INSTRUMENT PANEL CLUSTER ASSEMBLY.
		Less than 0.5 ohms.	GO TO **A21.**
A21.	Reconnect all connectors and start engine. Connect a fused jumper between NOISE SUPPRESSOR FILTER connector cavity 3 and cavity 2.	Tachometer displays engine rpm.	Replace NOISE SUPPRESSOR FILTER.
		Tachometer still does not function.	Check INSTRUMENT PANEL CLUSTER printed circuit for cracks and bad connections. If printed circuit is defective, replace. If no defects are found, replace Tachometer.

For component replacement procedures, refer to the section listed below.

COMPONENT	SECTION
Engine Coolant Temperature (ECT) Gage	Section 8C
Engine Coolant Temperature (ECT) Sending Unit	Section 6B
Fuel Gage	Section 8C
Fuel Gage Sending Unit	Section 6C
Instrument Panel Cluster Printed Circuit	Section 8C
Noise Suppressor Filter	Section 6D4
Oil Pressure Switch	Section 6A1
Tachometer	Section 8C

CIRCUIT OPERATION

FUEL GAGE

The pointer of the Fuel Gage is moved by the magnetic fields of two coils. The coils are at right angles to each other. Voltage is applied to coil F from the IG-COIL METER Fuse. The circuit divides at the opposite (ground) side of the coil. One path seeks a ground through coil E to G200 and the other path seeks a ground through the variable resistor in the FUEL GAGE SENDING UNIT.

When fuel level is low, resistance in the FUEL GAGE SENDING UNIT is high. Since current will always seek the path of least resistance, current will flow through coil F and coil E to ground at G200. Because the length of the E coil winding is twice the length of the F coil winding, the magnetic field generated by the E coil is twice as strong as the magnetic field generated by the F coil. Therefore, the pointer will be pulled to the "E" position.

As fuel level increases, resistance in the FUEL GAGE SENDING UNIT decreases. Since current will always seek the path of least resistance, more current will begin to bypass the E coil and travel directly to ground through the FUEL GAGE SENDING UNIT. Under these conditions, the coil F magnetic field becomes stronger than the coil E magnetic field and the pointer moves toward the "F" position.

ENGINE COOLANT TEMPERATURE (ECT) GAGE

The pointer of the Engine Coolant Temperature (ECT) Gage is moved by the magnetic fields of two coils. The coils are at right angles to each other. Voltage is applied to coil H from the IG-COIL METER Fuse. The circuit divides at the opposite (ground) side of the coil. One path seeks a ground through coil C and the other path seeks a ground through the variable resistor in the ENGINE COOLANT TEMPERATURE (ECT) SENDING UNIT.

When engine coolant temperature is low, resistance in the ENGINE COOLANT TEMPERATURE (ECT) SENDING UNIT is high. Since current will always seek the path of least resistance, current will flow through the H coil and the C coil to ground at G200. Because the length of the C coil winding is twice the length of the coil H winding, the magnetic field generated by coil C is twice as strong as the magnetic field generated by coil H. Therefore, the pointer will be pulled to the "C" position.

As engine coolant temperature increases, resistance in the ENGINE COOLANT TEMPERATURE (ECT) SENDING UNIT decreases. Since current will always seek the path of least resistance, more current will begin to bypass the C coil and travel directly to ground through the ENGINE COOLANT TEMPERATURE (ECT) SENDING UNIT. Under these conditions, the coil H magnetic field becomes stronger than the coil C magnetic field and the pointer moves toward the "H" position.

OIL PRESSURE INDICATOR

With the ignition switch in the "ON" or "START" position, Battery voltage is applied through the IG-COIL METER Fuse to the Oil Pressure Indicator in the INSTRUMENT PANEL CLUSTER ASSEMBLY. If engine oil pressure should fall below 32 kPa (4.5 psi), the OIL PRESSURE SWITCH located on the engine block closes. With this switch closed, a ground path is provided to the Oil Pressure Indicator and the bulb lights.

TACHOMETER

The Tachometer displays engine speed in rpm. Ground pulses are taken from the ignition system and sent to the Tachometer. The Tachometer responds to the frequency of the ground pulses, which increase with engine speed. The purpose of the NOISE SUPPRESSOR FILTER within the circuit is to round off pulses and remove voltage spikes caused by noise in the circuit.

INSTRUMENT PANEL CLUSTER ASSEMBLY CONNECTOR: C1

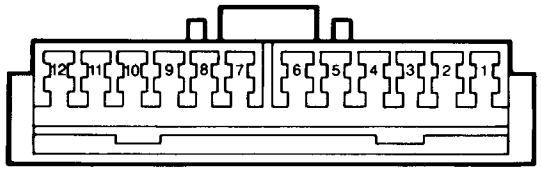

NATURAL

WIRING DETAIL LEGEND

CAVITY	WIRE COLOR	CIRCUIT
1	BLK/YEL	Ground — G200/G201
2	YEL	Vehicle Speed Sensor (VSS) Signal
3	RED/YEL	Illumination Lamps Power Feed
4	RED/GRN	Illumination Lamps Control
5	PPL/YEL	Malfunction Indicator Lamp (MIL) Control
6	YEL/BLK	Oil Pressure Indicator Control
7	RED/BLK	"BRAKE" Indicator Control
8	ORN/BLK	"4WD" Indicator (Four-Wheel Drive Models)
9	GRN/YEL	RH Turn Indicator
10	RED	High-Beam Indicator Control
11	WHT/BLU	High-Beam Indicator Power Feed
12	GRN/RED	LH Turn Indicator

INSTRUMENT PANEL CLUSTER ASSEMBLY CONNECTOR: C2

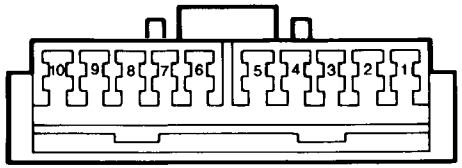

NATURAL

WIRING DETAIL LEGEND

CAVITY	WIRE COLOR	CIRCUIT
1	YEL/WHT	Engine Coolant Temperature (ECT) Sensor
2	—	Not Used (USA)
	ORN/WHT	Daytime Running Lights (DRL) Indicator (Canada)
3	WHT/RED	Charge Indicator
4	—	Not Used
5	PPL/RED	Ignition Switch (Bulb Test)
6	BLK/WHT	Power Feed — IG-COIL METER Fuse
7	YEL/RED	Fuel Gage
8	BLK	Ground — G200/G201
9	BRN	Tachometer (Four-Wheel Drive Models)
10	GRA/YEL	Seat Belt Indicator Control

INSTRUMENT PANEL CLUSTER ASSEMBLY CONNECTOR: C3

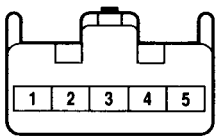

BLACK

WIRING DETAIL LEGEND

CAVITY	WIRE COLOR	CIRCUIT
1	PNK	Malfunction Indicator Lamp (MIL) Cancel Switch
2	—	Not Used
3	BLK	Malfunction Indicator Lamp (MIL) Cancel Switch
4	—	Not Used
5	GRN	Malfunction Indicator Lamp (MIL) Cancel Switch

WIPER/WASHER

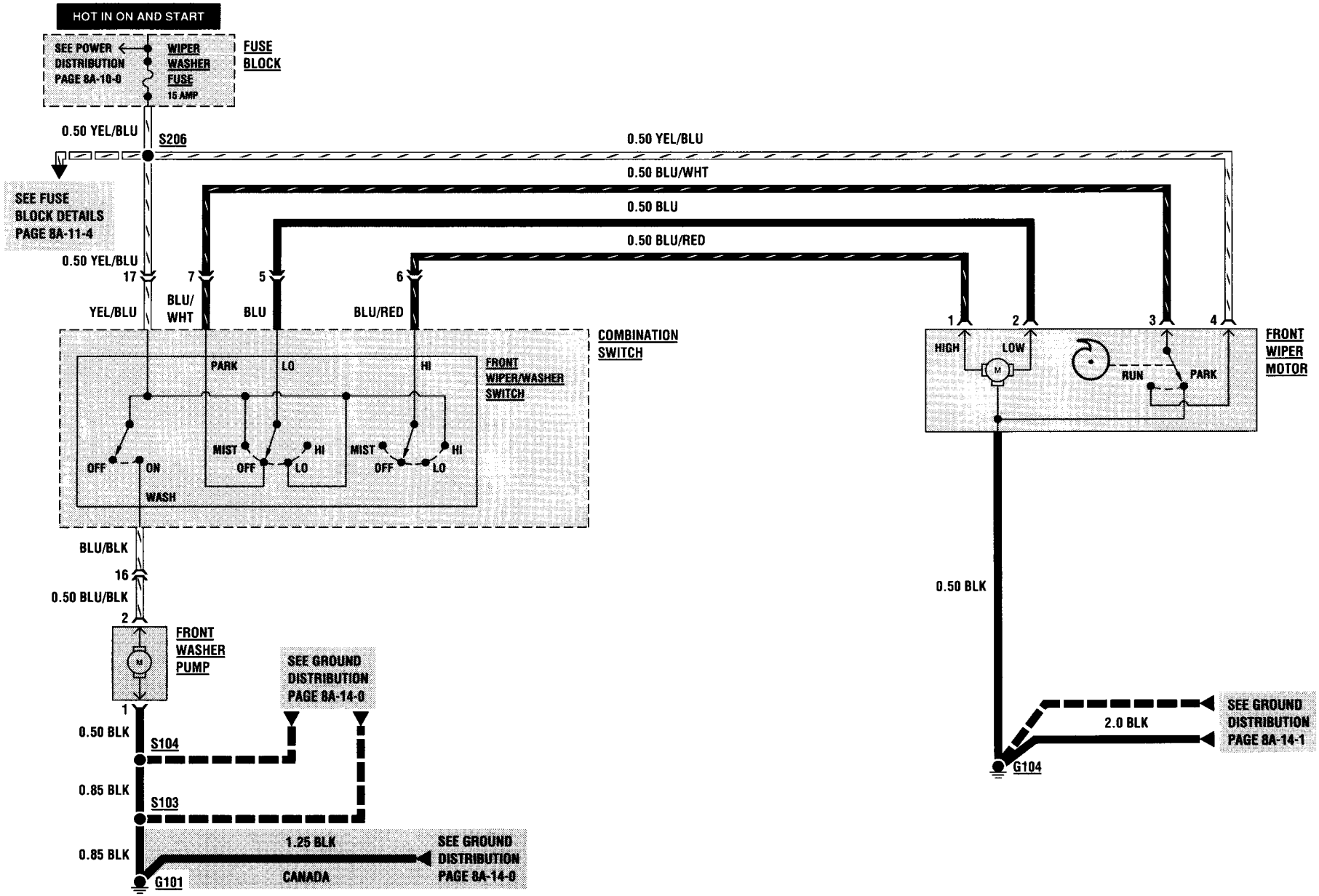

WIPER/WASHER

COMPONENT	LOCATION	FIGURE	CONNECTOR
Combination Switch	On Steering Column	201-05/A	202-00/A1
Front Washer Pump	RH Front Engine Compartment on Washer Fluid Reservoir	201-01/A	
Front Wiper Motor	LH Rear Engine Compartment on Bulkhead	201-03/A	202-07/C3
Fuse Block	Under I/P left of Steering Column	201-05/A	
S103	Main Harness, behind RH Headlamp	201-01/A	
S104	Main Harness, behind RH Headlamp	201-01/A	
S206	Main Harness, behind LH I/P near Fuse Block	201-05/A	
G101	RH Front Engine Compartment near Washer Fluid Reservoir	201-01/A	
G104	LH Rear Engine Compartment on LH side of Bulkhead	201-03/A	

TROUBLESHOOTING HINTS

1. Check the WIPER WASHER Fuse with a fuse tester.
2. Check that grounds G101 and G104 are clean and tight.
3. If the FRONT WASHER PUMP does not operate, check that:
   - Washer fluid reservoir is adequately filled.
   - Hoses are not pinched or kinked.
   - Hoses are correctly routed.
   - Front washer nozzles are not clogged.

SYSTEM DIAGNOSIS

WIPER/WASHER	DIAGNOSTIC CHART A		
	TEST	RESULT	ACTION
A1.	Turn ignition switch to "ON." Pull Front Wiper/Washer Switch back.	FRONT WASHER PUMP operates.	GO TO **A2.**
		FRONT WASHER PUMP does not operate.	GO TO **A5.**
A2.	Press Front Wiper/Washer Switch down to the "MIST" position and release.	Wipers sweep once and stop.	GO TO **A3.**
		Wipers do not sweep.	GO TO **A9.**
		Wipers sweep more than once.	GO TO **A11.**
		Wipers do not complete at least one full sweep.	GO TO **A19.**

SYSTEM DIAGNOSIS

WIPER/WASHER	DIAGNOSTIC CHART A (CONT'D)		
	TEST	RESULT	ACTION
A3.	Turn Front Wiper/Washer Switch to the "LO" position.	Wipers do not sweep.	Replace COMBINATION SWITCH.
		Wipers operate at low speed.	GO TO **A4.**
		Wipers operate at high speed.	GO TO **A13.**
A4.	Turn Front Wiper/Washer Switch to the "HI" position.	Wipers operate at high speed.	All systems diagnosed in this cell are functioning normally.
		Wipers do not sweep.	GO TO **A15.**
		Wipers operate at low speed.	GO TO **A17.**
A5.	Backprobe COMBINATION SWITCH connector with a test lamp from cavity 17 to chassis ground.	Test lamp does not light.	Repair open in YEL/BLU wire between FUSE BLOCK and COMBINATION SWITCH.
		Test lamp lights.	GO TO **A6.**
A6.	Backprobe COMBINATION SWITCH connector with a test lamp from cavity 16 to chassis ground. Pull Front Wiper/ Washer Switch back.	Test lamp does not light.	Replace COMBINATION SWITCH.
		Test lamp lights.	GO TO **A7.**
A7.	Turn ignition switch to "LOCK." Disconnect FRONT WASHER PUMP connector. Connect a test lamp from connector cavity 2 to chassis ground. Turn ignition switch to "ON" and pull Front Wiper/Washer Switch back.	Test lamp does not light.	Repair open in BLU/BLK wire between FRONT WASHER PUMP and COMBINATION SWITCH.
		Test lamp lights.	GO TO **A8.**
A8.	Connect a digital multimeter from FRONT WASHER PUMP connector cavity 1 to chassis ground. Measure resistance.	More than 1.0 ohm.	Repair BLK ground wire between FRONT WASHER PUMP and G101.
		Less than 1.0 ohm.	Replace FRONT WASHER PUMP.
A9.	Backprobe COMBINATION SWITCH connector with a test lamp from cavity 5 to chassis ground while holding Front Wiper/Washer Switch in the "MIST" position.	Test lamp does not light.	Replace COMBINATION SWITCH.
		Test lamp lights.	GO TO **A10.**
A10.	Backprobe FRONT WIPER MOTOR connector with a test lamp from cavity 2 to chassis ground while holding Front Wiper/Washer Switch in the "MIST" position.	Test lamp does not light.	Repair open in BLU wire between FRONT WIPER MOTOR and COMBINATION SWITCH.
		Test lamp lights.	Replace FRONT WIPER MOTOR.
A11.	Backprobe FRONT WIPER MOTOR connector with a test lamp from cavity 2 to chassis ground. Press Front Wiper/ Washer Switch to the "MIST" position and release.	Test lamp lights and goes out.	Replace FRONT WIPER MOTOR.
		Test lamp remains lit.	GO TO **A12.**

WIPER/WASHER

SYSTEM DIAGNOSIS

WIPER/WASHER — DIAGNOSTIC CHART A (CONT'D)

	TEST	RESULT	ACTION
A12.	Disconnect COMBINATION SWITCH connector. Connect a test lamp from connector terminal 5 (harness side) to chassis ground.	Test lamp lights.	Repair short to voltage in BLU wire between FRONT WIPER MOTOR and COMBINATION SWITCH.
		Test lamp does not light.	Replace COMBINATION SWITCH.
A13.	Backprobe FRONT WIPER MOTOR connector with a test lamp from cavity 1 to chassis ground.	Test lamp does not light.	Replace FRONT WIPER MOTOR.
		Test lamp lights.	GO TO **A14.**
A14.	Disconnect COMBINATION SWITCH connector. Connect a test lamp from connector terminal 6 (switch side) to chassis ground.	Test lamp lights.	Repair short to voltage in BLU/RED wire between COMBINATION SWITCH and FRONT WIPER MOTOR.
		Test lamp does not light.	Replace COMBINATION SWITCH.
A15.	Backprobe FRONT WIPER MOTOR connector with a test lamp from cavity 1 to chassis ground.	Test lamp lights.	Replace FRONT WIPER MOTOR.
		Test lamp does not light.	GO TO **A16.**
A16.	Backprobe COMBINATION SWITCH connector with a test lamp from cavity 6 to chassis ground.	Test lamp lights.	Repair open in BLU/RED wire between COMBINATION SWITCH and FRONT WIPER MOTOR.
		Test lamp does not light.	Replace COMBINATION SWITCH.
A17.	Backprobe FRONT WIPER MOTOR connector with a test lamp from cavity 2 to chassis ground.	Test lamp does not light.	Check BLU/RED wire for high resistance (more than 3.0 ohms). If OK, replace FRONT WIPER MOTOR.
		Test lamp lights.	GO TO **A18.**
A18.	Disconnect COMBINATION SWITCH connector. Connect a test lamp from connector terminal 5 (harness side) to chassis ground.	Test lamp lights.	Repair short to voltage in BLU wire between COMBINATION SWITCH and FRONT WIPER MOTOR.
		Test lamp does not light.	Replace COMBINATION SWITCH.
A19.	Manually move wipers out of park position. Backprobe FRONT WIPER MOTOR connector with a test lamp from cavity 3 to chassis ground.	Test lamp does not light.	Check for an open in YEL/BLU wire between S206 and FRONT WIPER MOTOR. If OK, replace FRONT WIPER MOTOR.
		Test lamp lights.	Check for an open in BLU/WHT wire between COMBINATION SWITCH and FRONT WIPER MOTOR. If OK, replace COMBINATION SWITCH.

WIPER/WASHER

For component replacement procedures, refer to the section listed below.

COMPONENT	SECTION
Combination Switch (without tilt wheel)	Section 3F1
Combination Switch (with tilt wheel)	Section 3F2
Front Washer Pump	Section 8E
Front Wiper Motor	Section 8E

CIRCUIT OPERATION

Whenever the ignition switch is in the "ON" or "START" position, Battery voltage is applied through the WIPER WASHER Fuse to the Front Wiper/Washer Switch (in the COMBINATION SWITCH) and FRONT WIPER MOTOR Pawl and Switch contacts.

WASHER OPERATION

When the Front Wiper/Washer Switch is pulled back, Battery voltage is applied through the Wash Switch to the FRONT WASHER PUMP. The FRONT WASHER PUMP is permanently grounded at G101 and will operate as long as the Wash Switch is engaged. To initiate wiper operation, the Front Wiper/Washer Switch must be turned to the "MIST," "LO," or "HI" wiper positions.

MIST OPERATION

When the Front Wiper Washer Switch is moved to the "MIST" position, Battery voltage is applied to the LOW side of the FRONT WIPER MOTOR. The FRONT WIPER MOTOR starts to turn and engages the FRONT WIPER MOTOR Pawl and Switch. While the Pawl is turning with the motor, the switch remains closed for one wipe cycle. With this switch closed, Battery voltage is applied through the WIPER WASHER Fuse, the Pawl and Switch contacts, and the "OFF" contacts of the Front Wiper/Washer Switch to the LOW side of the FRONT WIPER MOTOR. In this manner, the FRONT WIPER MOTOR will continue to complete at least one full wipe cycle and will operate until the wipers are in the PARK position after the Front Wiper/Washer Switch has been released.

LOW OPERATION

With the Front Wiper/Washer Switch in the "LO" position, Battery voltage is applied through the WIPER WASHER Fuse, and the "LO" contacts of the Front Wiper/Washer Switch to the LOW side of the FRONT WIPER MOTOR. Since the FRONT WIPER MOTOR is permanently grounded at G104, the motor operates at low speed as long as the switch remains in this position. When the switch is placed in the "OFF" position, the Pawl and Switch assembly provides voltage to the motor until the wipers are in the PARK position.

HIGH OPERATION

With the Front Wiper/Washer Switch in the "HI" position, Battery voltage is applied through the WIPER WASHER Fuse, and the "HI" contacts of the Front Wiper Washer Switch to the HIGH side of the FRONT WIPER MOTOR. Since the FRONT WIPER MOTOR is permanently grounded at G104, the motor operates at high speed as long as the switch remains in this position. When the switch is moved to the "OFF" position, the Pawl and Switch assembly provides voltage to the motor until the wipers are in the PARK position.

BLANK

WIPER/WASHER: PULSE

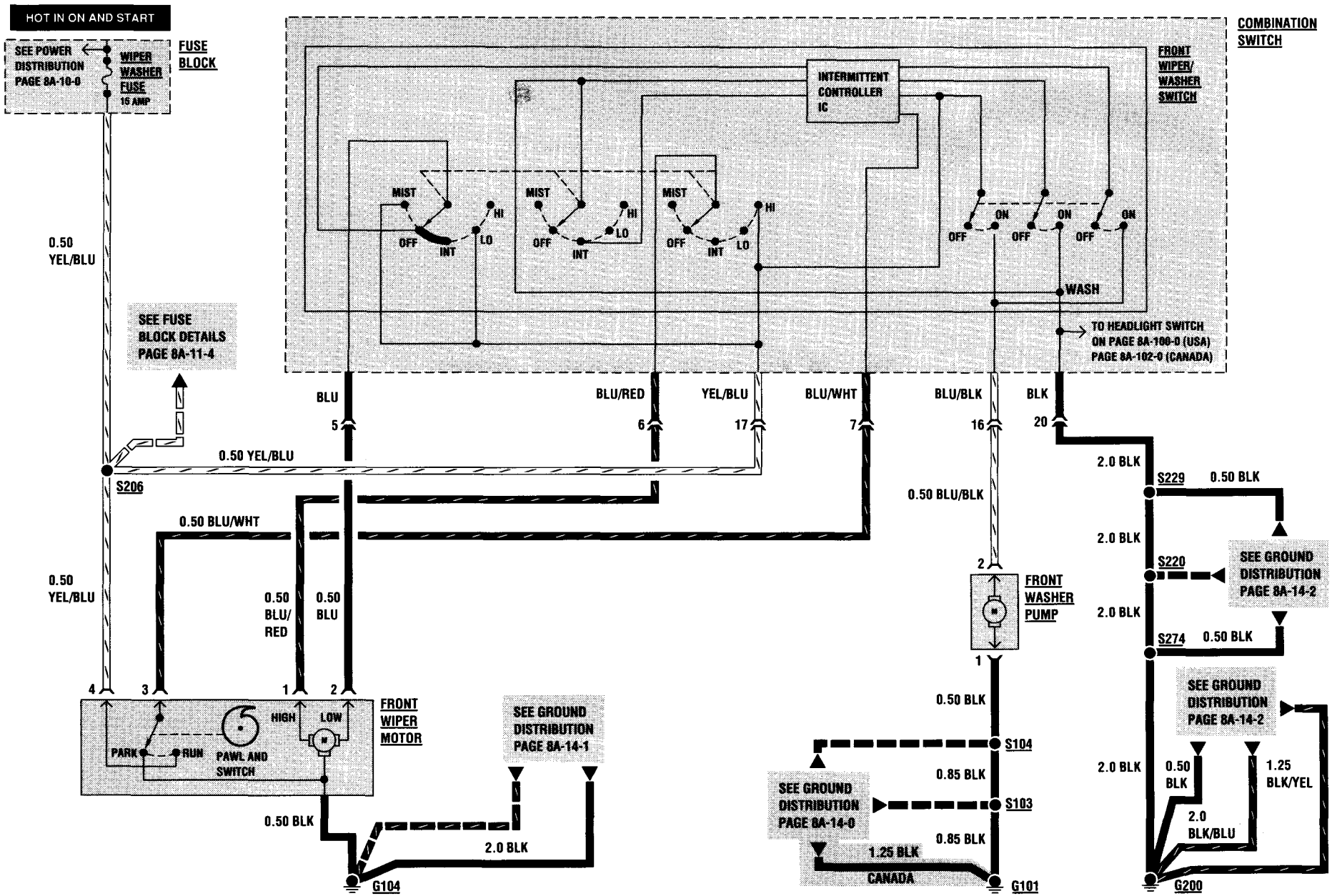

WIPER/WASHER: PULSE

COMPONENT	LOCATION	FIGURE	CONNECTOR
Combination Switch	On Steering Column	201-05/A	202-00/A1
Front Washer Pump	RH Front Engine Compartment on Washer Fluid Reservoir	201-01/A	
Front Wiper Motor	LH Rear Engine Compartment on Bulkhead	201-03/A	202-07/C3
Fuse Block	Under I/P left of Steering Column	201-05/A	
S103	Main Harness, behind RH Headlamp	201-01/A	
S104	Main Harness, behind RH Headlamp	201-01/A	
S206	Main Harness, behind LH I/P near Fuse Block	201-05/A	
S220	Main Harness, behind I/P left of Steering Column	201-05/A	
S229	Main Harness, behind I/P left of Steering Column	201-05/A	
S274	Main Harness, behind LH I/P near ECM	201-05/A	
G101	RH Front Engine Compartment near Washer Fluid Reservoir	201-01/A	
G104	LH Rear Engine Compartment on Bulkhead	201-03/A	
G200	Behind LH I/P above Fuse Block	201-05/A	

TROUBLESHOOTING HINTS

1. Check the WIPER WASHER Fuse with a fuse tester.
2. Check that G101, G104 and G200 are clean and tight.
3. If the WASHER does not operate, check that:
   - Washer reservoir is adequately filled.
   - Hoses are not pinched or kinked.
   - Hoses are properly routed.

WIPER/WASHER: PULSE

SYSTEM DIAGNOSIS

WIPER/WASHER: PULSE	DIAGNOSTIC CHART A		
	TEST	RESULT	ACTION
A1.	Turn ignition switch to "ON." Pull Front Wiper/Washer Switch toward driver's seat.	FRONT WASHER PUMP operates, and wipers complete at least one sweep.	GO TO **A2.**
		FRONT WASHER PUMP does not operate.	GO TO **A6.**
		FRONT WASHER PUMP operates but wipers do not complete at least one full sweep.	GO TO **A17.**
		FRONT WASHER PUMP continues to operate after Front Wiper/Washer Switch has been released.	GO TO **A21.**
		Wipers continue to operate after Front Wiper/Washer Switch has been released.	GO TO **A22.**
A2.	Push Front Wiper/Washer Switch down to "MIST" position and release.	Wipers operate for one sweep.	GO TO **A3.**
		Wipers do not operate.	Replace COMBINATION SWITCH.
		Wipers sweep more than once.	Replace COMBINATION SWITCH.
A3.	Turn Front Wiper/Washer Switch to "INT" position.	Wipers sweep once every 6 seconds.	GO TO **A4.**
		Wipers do not operate in the intermittent mode.	Replace COMBINATION SWITCH.
A4.	Turn Front Wiper/Washer Switch to "LO" position.	Wipers operate at low speed.	GO TO **A5.**
		Wipers do not operate.	Replace COMBINATION SWITCH.
		Wipers operate at high speed.	GO TO **A10.**
A5.	Turn Front Wiper/Washer Switch to "HI" position.	Wipers operate at high speed.	All systems diagnosed in this cell are functioning normally.
		Wipers do not operate.	GO TO **A12.**
		Wipers operate at low speed.	GO TO **A14.**
A6.	Backprobe COMBINATION SWITCH connector with a test lamp from cavity 17 to chassis ground.	Test lamp does not light.	Repair open in YEL/BLU wire between FUSE BLOCK and COMBINATION SWITCH.
		Test lamp lights.	GO TO **A7.**

WIPER/WASHER: PULSE

SYSTEM DIAGNOSIS

WIPER/WASHER: PULSE **DIAGNOSTIC CHART A (CONT'D)**

	TEST	RESULT	ACTION
A7.	Backprobe COMBINATION SWITCH connector with a test lamp from cavity 16 to chassis ground. Hold Washer Switch in the ON position.	Test lamp does not light.	Check for an open in BLK wire between COMBINATION SWITCH and G200. If OK, replace COMBINATION SWITCH.
		Test lamp lights.	GO TO **A8.**
A8.	Turn ignition switch to "LOCK." Disconnect FRONT WASHER PUMP and COMBINATION SWITCH connectors. Connect a digital multimeter from terminal 16 of the COMBINATION SWITCH connector to cavity 2 of the FRONT WASHER PUMP connector. Measure resistance.	More than 1.0 ohm.	Repair open in BLU/BLK wire between COMBINATION SWITCH and FRONT WASHER PUMP.
		Less than 1.0 ohm.	GO TO **A9.**
A9.	Connect a digital multimeter from FRONT WASHER PUMP connector cavity 1 to chassis ground. Measure resistance.	More than 1.0 ohm.	Repair BLK ground wire between FRONT WASHER PUMP and G101.
		Less than 1.0 ohm.	Replace FRONT WASHER PUMP.
A10.	Backprobe FRONT WIPER MOTOR connector with a test lamp from cavity 1 to chassis ground. Leave Wiper/Washer Switch in "LO."	Test lamp does not light.	Replace FRONT WIPER MOTOR.
		Test lamp lights.	GO TO **A11.**
A11.	Disconnect COMBINATION SWITCH connector. Connect a test lamp from connector terminal 6 to chassis ground.	Test lamp lights.	Repair short to voltage in BLU/RED wire between COMBINATION SWITCH and FRONT WIPER MOTOR.
		Test lamp does not light.	Replace COMBINATION SWITCH.
A12.	Backprobe FRONT WIPER MOTOR connector with a test lamp from cavity 1 to chassis ground. Leave Front Wiper/ Washer Switch in "HI."	Test lamp lights.	Replace FRONT WIPER MOTOR.
		Test lamp does not light.	GO TO **A13.**
A13.	Backprobe COMBINATION SWITCH with a test lamp from cavity 6 to chassis ground.	Test lamp lights.	Repair open in BLU/RED wire between COMBINATION SWITCH and FRONT WIPER MOTOR.
		Test lamp does not light.	Replace COMBINATION SWITCH.
A14.	Backprobe FRONT WIPER MOTOR connector with a test lamp from cavity 2 to chassis ground. Leave front Wiper/ Washer Switch in "HI."	Test lamp lights.	Replace COMBINATION SWITCH.
		Test lamp does not light.	GO TO **A15.**
A15.	Backprobe FRONT WIPER MOTOR connector with a digital multimeter from cavity 1 to ground. Measure voltage.	More than 10.0 volts.	Replace FRONT WIPER MOTOR.
		Less than 10.0 volts.	GO TO **A16.**

SYSTEM DIAGNOSIS

WIPER/WASHER: PULSE	DIAGNOSTIC CHART A (CONT'D)		
	TEST	RESULT	ACTION
A16.	Disconnect COMBINATION SWITCH connector and FRONT WIPER MOTOR connector. Connect a digital multimeter from FRONT WIPER MOTOR connector cavity 1 to COMBINATION SWITCH connector terminal 6. Measure resistance.	More than 5.0 ohms.	Repair BLU/RED wire between COMBINATION SWITCH and FRONT WIPER MOTOR.
		Less than 5.0 ohms.	Replace COMBINATION SWITCH.
A17.	Backprobe FRONT WIPER MOTOR connector with a test lamp from cavity 2 to chassis ground. Pull and hold Front Wiper/Washer Switch toward driver.	Test lamp lights.	Replace FRONT WIPER MOTOR.
		Test lamp does not light.	GO TO **A18.**
A18.	Backprobe Front Wiper/Washer Switch connector with a test lamp from cavity 5 to chassis ground. Pull and hold Wiper/ Washer Switch toward driver.	Test lamp lights.	Repair open in BLU wire between COMBINATION SWITCH and FRONT WIPER MOTOR.
		Test lamp does not light.	GO TO **A19.**
A19.	Backprobe FRONT WIPER MOTOR connector with a test lamp from cavity 4 to chassis ground.	Test lamp does not light.	Repair open in YEL/BLU wire between S206 and FRONT WIPER MOTOR.
		Test lamp lights.	GO TO **A20.**
A20.	Disconnect COMBINATION SWITCH connector. Manually move wipers out of Park position. Backprobe FRONT WIPER MOTOR connector with a test lamp from cavity 3 to ground.	Test lamp lights.	Check for an open in BLU/WHT wire between COMBINATION SWITCH and FRONT WIPER MOTOR. If OK, replace COMBINATION SWITCH.
		Test lamp does not light.	Replace FRONT WIPER MOTOR.
A21.	Disconnect COMBINATION SWITCH connector.	FRONT WASHER PUMP continues to operate.	Repair short to voltage in BLU/BLK wire between Front Wiper/Washer Switch and FRONT WASHER PUMP.
		FRONT WASHER PUMP stops operating.	Replace COMBINATION SWITCH.
A22.	Disconnect COMBINATION SWITCH connector.	Wipers stop operating.	Replace COMBINATION SWITCH.
		Wipers continue to operate.	GO TO **A23.**

WIPER/WASHER: PULSE

SYSTEM DIAGNOSIS

WIPER/WASHER: PULSE	DIAGNOSTIC CHART A (CONT'D)	
TEST	**RESULT**	**ACTION**
A23. Disconnect FRONT WIPER MOTOR connector. Connect a test lamp from FRONT WIPER MOTOR connector cavity 2 to chassis ground.	Test lamp does not light.	Check for a short to voltage in BLU/RED wire between COMBINATION SWITCH and FRONT WIPER MOTOR. If OK, replace FRONT WIPER MOTOR.
	Test lamp lights.	Repair short to voltage in BLU wire between COMBINATION SWITCH and FRONT WIPER MOTOR.

For component replacement procedures, refer to the section listed below.

COMPONENT	SECTION
Combination Switch (without tilt wheel)	Section 3F1
Combination Switch (with tilt wheel)	Section 3F2
Front Washer Pump	Section 8E
Front Wiper Motor	Section 8E

CIRCUIT OPERATION

Whenever the ignition switch is in the "ON" or "START" position, battery voltage is applied through the WIPER WASHER Fuse to the Front Wiper/Washer Switch (in the COMBINATION SWITCH) and the FRONT WIPER MOTOR Pawl and Switch contacts.

WASHER OPERATION

When the Front Wiper/Washer Switch is pulled toward the driver, battery voltage is applied through the Wash Switch contacts to the FRONT WASHER PUMP. The FRONT WASHER PUMP is permanently grounded at G101 and will operate as long as the Wash Switch is held. To initiate wiper operation, battery voltage is applied through the Wash Switch contacts and the Intermittent Controller to the OFF contacts of the Front Wiper/Washer Switch. This action applies battery voltage to the LOW side of the FRONT WIPER MOTOR. The FRONT WIPER MOTOR is permanently grounded at G104 and will continue to operate in LOW as long as the Wash Switch is held in the ON position.

The FRONT WIPER MOTOR Pawl and Switch will engage as the Motor turns, and its contacts will remain closed until the wipers are in the Park position. While the Pawl and Switch contacts are closed, voltage is applied through the WIPER WASHER Fuse, the FRONT WIPER MOTOR Pawl and Switch contacts and the OFF contacts of the Front Wiper/Washer Switch to the LOW side of the FRONT WIPER MOTOR. In this manner, the wipers will complete at least one sweep after the Wash Switch has been released.

MIST OPERATION

When the Front Wiper/Washer Switch is moved to the "MIST" position, battery voltage is applied to the LOW side of the FRONT WIPER MOTOR through the WIPER WASHER Fuse and the Front Wiper/Washer Switch. The FRONT WIPER MOTOR starts to turn and engages the FRONT WIPER MOTOR Pawl and Switch. While the Pawl is turning with the motor, the switch remains closed for one wipe cycle. With this switch closed, battery voltage is applied through the WIPER WASHER Fuse, the Pawl and Switch contacts and the OFF contacts of the Front Wiper/Washer Switch to the LOW side of the FRONT WIPER MOTOR. In this manner, the FRONT WIPER MOTOR will complete one full wipe cycle after the Front Wiper/Washer Switch has been released from the "MIST" position.

INTERMITTENT OPERATION

With the Front Wiper/Washer Switch in the "INT" position, battery voltage is applied through the WIPER WASHER Fuse to the coil of an electronic relay in the Intermittent Controller and to a condenser also in the Intermittent Controller. The condenser charges to voltage and the relay is energized as soon as power is applied. When the switch in the energized relay closes, current flows through the YEL/BLU wire, BLU/WHT wire, Front Wiper/Washer Switch and BLU wire to the FRONT WIPER MOTOR LOW side. The wipers begin to operate at low speed.

By the time the FRONT WIPER MOTOR makes one complete sweep and the FRONT WIPER MOTOR Pawl and Switch has engaged, the condenser in the Intermittent Controller has discharged. This discharge in the condenser causes the Intermittent Controller Relay coil to de-energize, and the switch in the relay to open. Current flow to the wipers is then cut off until the condenser is recharged. In this manner, intermittent wiper operation is achieved through the charging and discharging of the Intermittent Controller condenser.

LOW OPERATION

With the Front Wiper/Washer Switch in the "LO" position, battery voltage is applied through the WIPER WASHER Fuse, and the "LO" contacts of the Front Wiper/Washer Switch to the LOW side of the FRONT WIPER MOTOR. Since the FRONT WIPER MOTOR is permanently grounded at G104, the motor operates at low speed as long as the switch remains in this position. When the switch is placed in the "OFF" position, the Pawl and Switch assembly provides voltage to the motor until the wipers are in the Park position.

HIGH OPERATION

With the Front Wiper/Washer Switch in the "HI" position, battery voltage is applied through the WIPER WASHER Fuse, and the HIGH contacts of the Front Wiper/Washer Switch to the HIGH side of the FRONT WIPER MOTOR. Since the FRONT WIPER MOTOR is permanently grounded at G104, the motor operates at high speed as long as the switch remains in this position. When the switch is placed in the "OFF" position, the Pawl and Switch assembly provides voltage to the motor until the wipers are in the Park position.

BLANK

REAR WIPER/WASHER

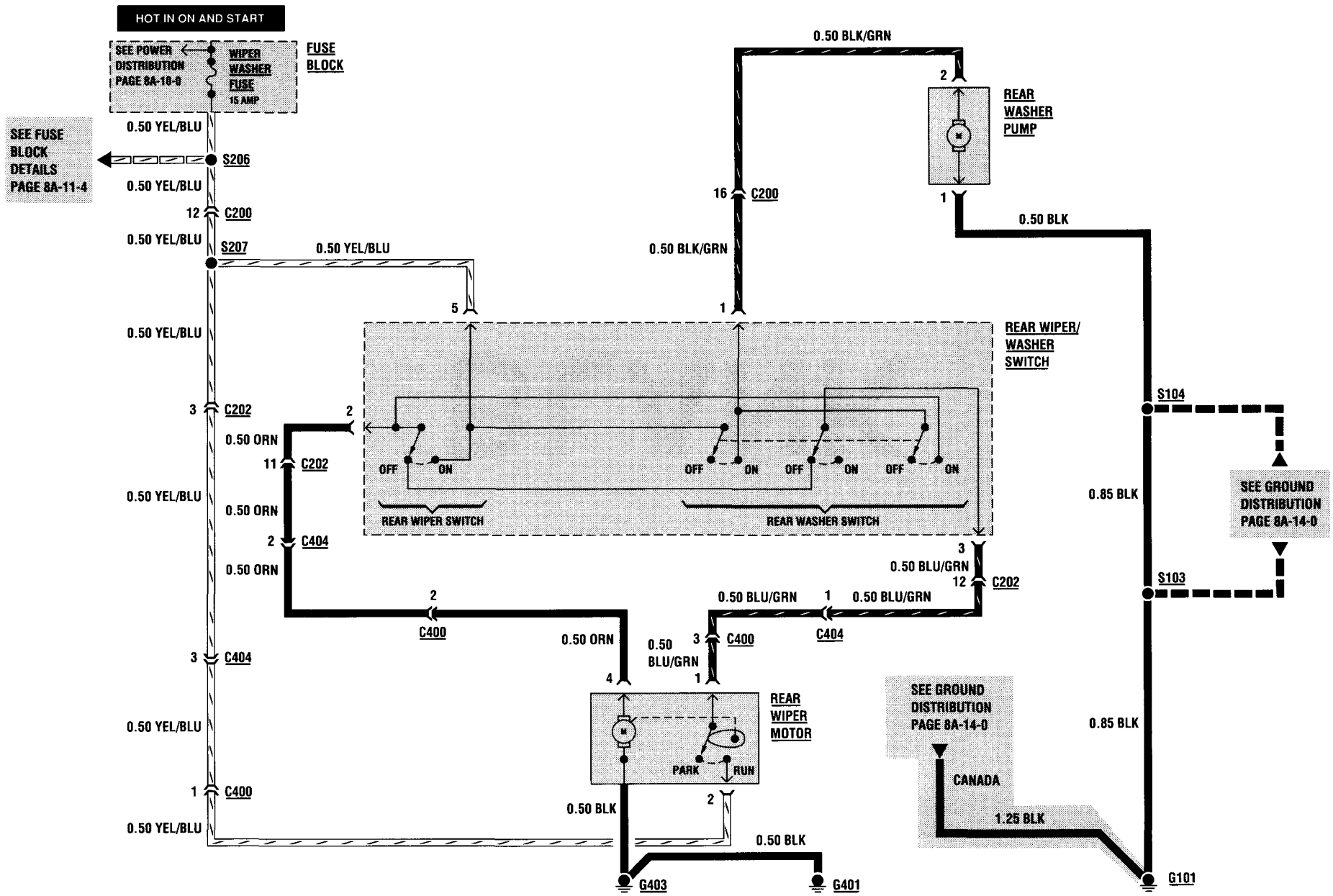

REAR WIPER/WASHER

COMPONENT	LOCATION	FIGURE	CONNECTOR
Fuse Block	Under I/P left of Steering Column	201-05/A	
Rear Washer Pump	RH Front Engine Compartment on Washer Fluid Reservoir	201-01/A	
Rear Wiper Motor	In Center of Back Door	201-09/A	202-07/C3
Rear Wiper/Washer Switch	LH I/P right of Steering Column	201-06/A	202-06/B2
C200 (22 Cavities)	I/P Harness to Main Harness, behind I/P left of Steering Column	201-05/A	202-01/A1
C202 (20 Cavities)	I/P Harness to Floor Harness 1, behind I/P left of Steering Column	201-06/A	202-03/A1
C400 (3 Cavities)	Rear Lamp Harness to Back Door Harness, behind RH Rear Wheelhousing	201-08/A	
C404 (6 Cavities)	Floor Harness 1 to Rear Lamp Harness, behind LH Rear Wheelhousing	201-08/A	202-06/C3
S103	Main Harness, behind RH Headlamp	201-01/A	
S104	Main Harness, behind RH Headlamp	201-01/A	
S206	Main Harness, behind LH I/P near Fuse Block	201-05/A	
S207	I/P Harness, behind I/P near LH Front Speaker	201-06/A	
G101	RH Front Engine Compartment near Washer Fluid Reservoir	201-01/A	
G401	Inside Back Door near Rear Wiper Motor	201-09/A	
G403	Inside Back Door near Rear Wiper Motor	201-09/A	

TROUBLESHOOTING HINTS

1. Check the WIPER WASHER Fuse by operating front wipers.
2 Check that grounds G101, G401 and G403 are clean and tight.
3 If the Rear Washer does not operate, check that:
   - Washer reservoir is adequately filled.
   - Hoses are not pinched or kinked.
   - Hoses are properly routed.

REAR WIPER/WASHER

SYSTEM DIAGNOSIS

REAR WIPER/WASHER	DIAGNOSTIC CHART A		
	TEST	RESULT	ACTION
A1.	Turn ignition switch to "ON" and press Rear Wiper Switch to ON.	REAR WIPER MOTOR operates.	GO TO **A2**.
		REAR WIPER MOTOR does not operate.	GO TO **A5**.
A2.	Press Rear Wiper Switch to OFF.	REAR WIPER MOTOR stops with wiper in PARK position.	GO TO **A3**.
		REAR WIPER MOTOR does not stop.	GO TO **A8**.
		Rear Wiper does not return to PARK position.	GO TO **A10**.
A3.	Press and hold Rear Washer Switch.	REAR WASHER PUMP and REAR WIPER MOTOR both operate.	GO TO **A4**.
		REAR WASHER PUMP does not operate.	Release switch and GO TO **A13**.
		REAR WIPER MOTOR does not operate.	Replace REAR WIPER/WASHER SWITCH.
A4.	Release Rear Washer Switch.	REAR WASHER PUMP and REAR WIPER MOTOR both stop with wiper in PARK position.	All systems diagnosed in this cell are functioning normally.
		REAR WASHER PUMP does not stop.	GO TO **A16**.
		REAR WIPER MOTOR does not stop or rear wiper does not return to PARK position.	Replace REAR WIPER/WASHER SWITCH.
A5.	Backprobe REAR WIPER/WASHER SWITCH connector with a test lamp from cavity 5 to chassis ground.	Test lamp does not light.	Repair open in YEL/BLU wire between FUSE BLOCK and REAR WIPER/WASHER SWITCH.
		Test lamp lights.	GO TO **A6**.
A6.	Backprobe REAR WIPER/WASHER SWITCH connector with a test lamp from cavity 2 to chassis ground.	Test lamp does not light.	Replace REAR WIPER/WASHER SWITCH.
		Test lamp lights.	GO TO **A7**.

REAR WIPER/WASHER

SYSTEM DIAGNOSIS

REAR WIPER/WASHER — DIAGNOSTIC CHART A (CONT'D)

	TEST	RESULT	ACTION
A7.	Backprobe REAR WIPER MOTOR connector with a test lamp from cavity 4 to chassis ground.	Test lamp does not light.	Repair open in ORN wire between REAR WIPER/WASHER SWITCH and REAR WIPER MOTOR.
		Test lamp lights.	Replace REAR WIPER MOTOR.
A8.	Disconnect REAR WIPER/WASHER SWITCH connector.	REAR WIPER MOTOR continues to operate.	Repair short to voltage in ORN wire between REAR WIPER/WASHER SWITCH and REAR WIPER MOTOR.
		REAR WIPER MOTOR stops.	GO TO **A9**.
A9.	Connect a digital multimeter across REAR WIPER/WASHER SWITCH terminals 2 and 5. Measure resistance.	Less than infinite.	Replace REAR WIPER/WASHER SWITCH.
		Infinite.	Replace REAR WIPER MOTOR.
A10.	Backprobe REAR WIPER MOTOR connector with a test lamp from cavity 2 to chassis ground.	Test lamp does not light.	Repair open in YEL/BLU wire between S207 and REAR WIPER MOTOR.
		Test lamp lights.	GO TO **A11**.
A11.	Manually move wiper out of PARK position. Backprobe REAR WIPER MOTOR connector with a test lamp from cavity 1 to chassis ground.	Test lamp does not light.	Replace REAR WIPER MOTOR.
		Test lamp lights.	GO TO **A12**.
A12.	Backprobe REAR WIPER/WASHER SWITCH connector with a test lamp from cavity 3 to chassis ground.	Test lamp does not light.	Repair open in BLU/GRN wire between REAR WIPER MOTOR and REAR WIPER/WASHER SWITCH.
		Test lamp lights.	Replace REAR WIPER/WASHER SWITCH.
A13.	Backprobe REAR WIPER/WASHER SWITCH connector with a test lamp from cavity 1 to chassis ground while pressing Rear Washer Switch.	Test lamp does not light.	Replace REAR WIPER/WASHER SWITCH.
		Test lamp lights.	Release switch and GO TO **A14**.
A14.	Backprobe REAR WASHER PUMP connector with a test lamp from cavity 2 to chassis ground while pressing Rear Washer Switch.	Test lamp does not light.	Repair open in BLK/GRN wire between REAR WIPER/WASHER SWITCH and REAR WASHER PUMP.
		Test lamp lights.	GO TO **A15**.

REAR WIPER/WASHER

SYSTEM DIAGNOSIS

REAR WIPER/WASHER	DIAGNOSTIC CHART A (CONT'D)		
	TEST	RESULT	ACTION
A15.	Disconnect REAR WASHER PUMP connector. Connect a digital multimeter from connector cavity 1 to chassis ground. Measure resistance.	More than 1.0 ohm.	Repair BLK ground wire between REAR WASHER PUMP and G101.
		Less than 1.0 ohm.	Replace REAR WASHER PUMP.
A16.	Disconnect REAR WIPER/WASHER SWITCH connector.	REAR WASHER PUMP stops.	Replace REAR WIPER/WASHER SWITCH.
		REAR WASHER PUMP continues to operate.	Repair short to voltage in BLK/GRN wire between REAR WIPER/WASHER SWITCH and REAR WASHER PUMP.

For component replacement procedures, refer to the section listed below.

COMPONENT	SECTION
Rear Washer Pump	Section 8E
Rear Wiper Motor	Section 8E
Rear Wiper/Washer Switch	Section 8C

CIRCUIT OPERATION

WASHER OPERATION

Whenever the ignition switch is in the "ON" or "START" position, Battery voltage is applied through the WIPER WASHER Fuse to the REAR WIPER/WASHER SWITCH. When the Rear Washer Switch is pressed, battery voltage is applied through the closed contacts of the switch to the REAR WASHER PUMP and to the REAR WIPER MOTOR. Because the REAR WASHER PUMP is permanently grounded at G101, the pump continues to operate as long as the Rear Washer Switch is held.

REAR WIPER OPERATION

Whenever the ignition switch is in the "ON" or "START" positions, battery voltage is applied through the WIPER WASHER Fuse to the REAR WIPER/WASHER SWITCH. When the Rear Wiper Switch is pressed, battery voltage is applied through the closed contacts of the switch to the REAR WIPER MOTOR. Since the REAR WIPER MOTOR is permanently grounded at G401, the motor operates as long as the REAR WIPER/WASHER SWITCH is ON. The REAR WIPER MOTOR also incorporates a Pawl and Switch assembly which allows the motor to receive battery voltage and complete the wipe cycle in the event that the REAR WIPER/WASHER SWITCH is turned OFF when the wiper is not in the PARK (down) position.

BLANK

HEADLIGHTS

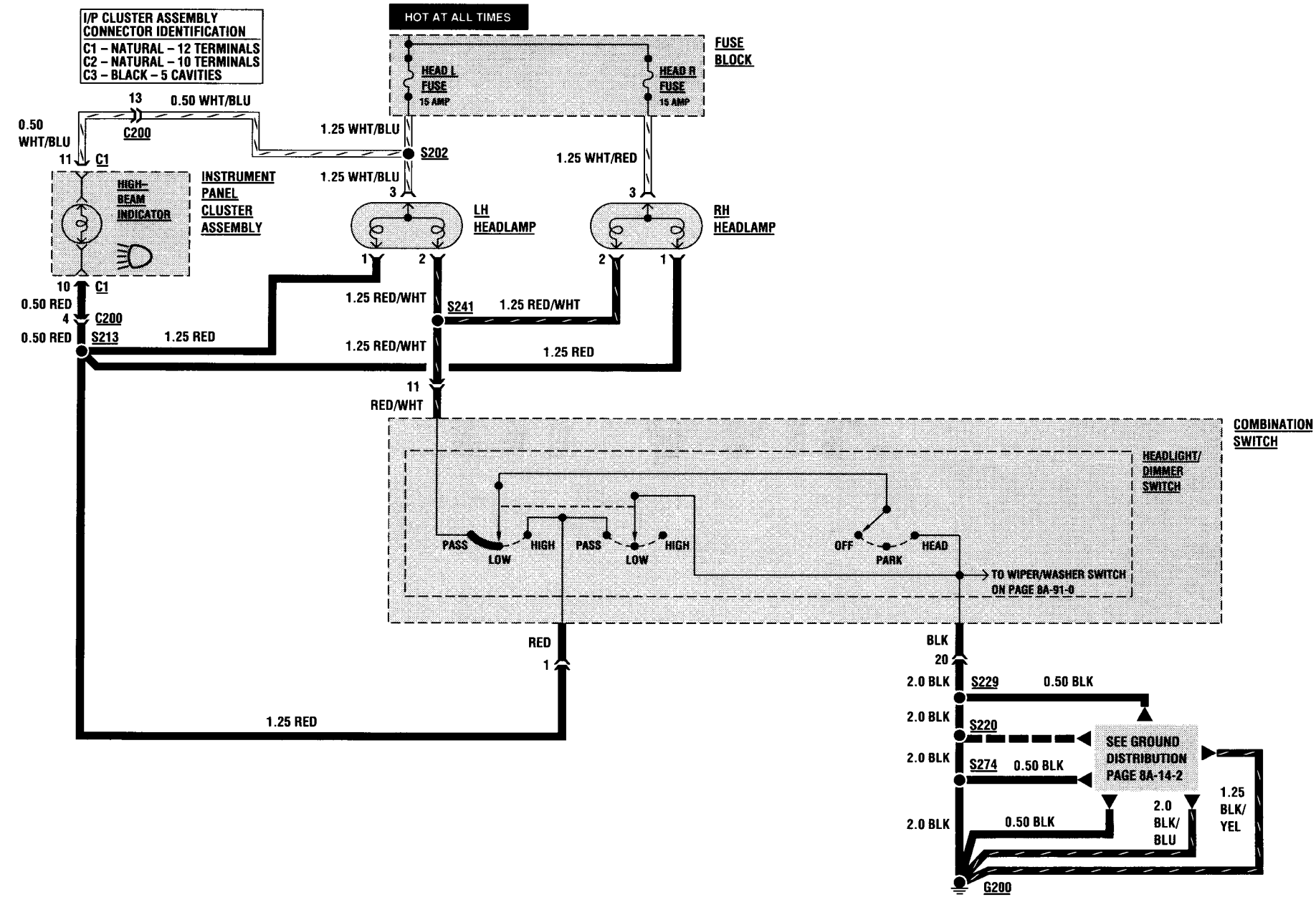
I/P CLUSTER ASSEMBLY CONNECTOR IDENTIFICATION
C1 – NATURAL – 12 TERMINALS
C2 – NATURAL – 10 TERMINALS
C3 – BLACK – 5 CAVITIES
HOT AT ALL TIMES
FUSE BLOCK
HEAD L FUSE 15 AMP
HEAD R FUSE 15 AMP
13
0.50 WHT/BLU
C200
0.50 WHT/BLU
11
C1
HIGH-BEAM INDICATOR
INSTRUMENT PANEL CLUSTER ASSEMBLY
1.25 WHT/BLU
S202
1.25 WHT/BLU
3
LH HEADLAMP
1.25 WHT/RED
3
RH HEADLAMP
1
2
2
1
10
C1
0.50 RED
4
C200
0.50 RED
S213
1.25 RED
1.25 RED/WHT
S241
1.25 RED/WHT
1.25 RED/WHT
1.25 RED
11
RED/WHT
COMBINATION SWITCH
HEADLIGHT/ DIMMER SWITCH
PASS
LOW
HIGH
PASS
LOW
HIGH
OFF
PARK
HEAD
TO WIPER/WASHER SWITCH ON PAGE 8A-91-0
RED
1
1.25 RED
BLK
20
2.0 BLK
S229
0.50 BLK
2.0 BLK
S220
2.0 BLK
S274
0.50 BLK
SEE GROUND DISTRIBUTION PAGE 8A-14-2
2.0 BLK
0.50 BLK
2.0 BLK/ BLU
1.25 BLK/ YEL
G200

HEADLIGHTS

COMPONENT	LOCATION	FIGURE	CONNECTOR
Combination Switch	On Steering Column	201-05/A	202-00/A1
Fuse Block	Under I/P left of Steering Column	201-05/A	
Instrument Panel Cluster Assembly	LH I/P	201-06/A	
C1 (12 Terminals)	I/P Harness to I/P Cluster Assembly, behind I/P Cluster Assembly	201-06/A	81-08
C200 (22 Cavities)	I/P Harness to Main Harness, behind I/P left of Steering Column	201-05/A	202-01/A1
S202	Main Harness, behind LH I/P near Fuse Block	201-05/A	
S213	Main Harness, behind I/P left of Steering Column	201-05/A	
S220	Main Harness, behind I/P left of Steering Column	201-05/A	
S229	Main Harness, behind I/P left of Steering Column	201-05/A	
S241	Main Harness, behind I/P left of Steering Column	201-05/A	
S274	Main Harness, behind LH I/P near ECM	201-05/A	
G200	Behind LH I/P above Fuse Block	201-05/A	

TROUBLESHOOTING HINTS

1. Check both the HEAD L and HEAD R Fuses with a fuse tester.
2. Check HEADLAMP bulbs. Refer to SECTION 8B for replacement procedures.
3. Check that ground G200 is clean and tight.
4. If one HEADLAMP is inoperative, check for open between FUSE BLOCK and inoperative HEADLAMP and check for open between inoperative HEADLAMP and S241 (low-beam) or S213 (high-beam).

SYSTEM DIAGNOSIS

HEADLIGHTS — **DIAGNOSTIC CHART A**

	TEST	RESULT	ACTION
A1.	Turn the Headlight/Dimmer Switch to the HEAD and LOW positions.	Low-beam HEADLAMPS operate.	GO TO **A2**.
		HEADLAMPS do not operate.	GO TO **A4**.
A2.	Push Headlight/Dimmer Switch forward to the HIGH position.	High-beam HEADLAMPS operate.	GO TO **A3**.
		High-beam HEADLAMPS do not operate.	GO TO **A6**.
		High-beam HEADLAMPS operate but High-beam Indicator is inoperative.	GO TO **A7**.
A3.	Pull the Headlight/Dimmer Switch back to the PASS position.	High-beam HEADLAMPS operate while switch is held.	All systems diagnosed in this cell are functioning normally.
		High-beam HEADLAMPS do not operate while switch is held.	Replace COMBINATION SWITCH.
A4.	Remove HEAD L and HEAD R Fuses. Backprobe COMBINATION SWITCH connector with a digital multimeter from cavity 20 to chassis ground. Measure resistance.	More than 0.3 ohms.	Repair BLK ground wire between COMBINATION SWITCH and G200.
		Less than 0.3 ohms.	GO TO **A5**.
A5	Backprobe COMBINATION SWITCH connector with a digital multimeter from cavity 11 to chassis ground. Measure resistance.	More than 0.3 ohms.	Replace COMBINATION SWITCH.
		Less than 0.3 ohms.	Repair open in RED/WHT wire between COMBINATION SWITCH and S241.
A6.	Remove HEAD L and HEAD R Fuses. Backprobe COMBINATION SWITCH connector with a digital multimeter from cavity 1 to chassis ground. Measure resistance.	More than 0.3 ohms.	Replace COMBINATION SWITCH.
		Less than 0.3 ohms.	Repair open in RED wire between S213 and COMBINATION SWITCH.
A7.	Disconnect INSTRUMENT PANEL CLUSTER ASSEMBLY connector C1. Connect a test lamp from INSTRUMENT PANEL CLUSTER ASSEMBLY connector C1 terminal 11 to chassis ground.	Test lamp lights.	GO TO **A8**.
		Test lamp does not light.	Repair open in WHT/BLU wire between INSTRUMENT PANEL CLUSTER ASSEMBLY and S202.
A8.	Connect a digital multimeter from INSTRUMENT PANEL CLUSTER ASSEMBLY connector C1 terminal 10 to chassis ground. Measure resistance.	Less than 0.3 ohms.	Repair/replace INSTRUMENT PANEL CLUSTER printed circuit.
		More than 0.3 ohms.	Repair open in RED wire between INSTRUMENT PANEL CLUSTER ASSEMBLY and S213.

HEADLIGHTS

For component replacement procedures, refer to the section listed below.

COMPONENT	SECTION
Combination Switch (without tilt wheel)	Section 3F1
Combination Switch (with tilt wheel)	Section 3F2
Instrument Panel Cluster	Section 8C
Instrument Panel Cluster Printed Circuit	Section 8C

CIRCUIT OPERATION

The Headlamps receive battery voltage through the HEAD L and HEAD R Fuses at all times. When the Headlight/Dimmer Switch (located in the COMBINATION SWITCH) is moved to the HEAD position, a ground is provided for the HEADLAMPS at G200 through the Headlight/Dimmer Switch. High and low-beam selection is provided by grounding the high and low-beam filaments separately through the switch. When the switch is placed in the PASS position, a ground is provided through the switch for the high-beam filaments.

HEADLIGHTS: DAYTIME RUNNING LIGHTS

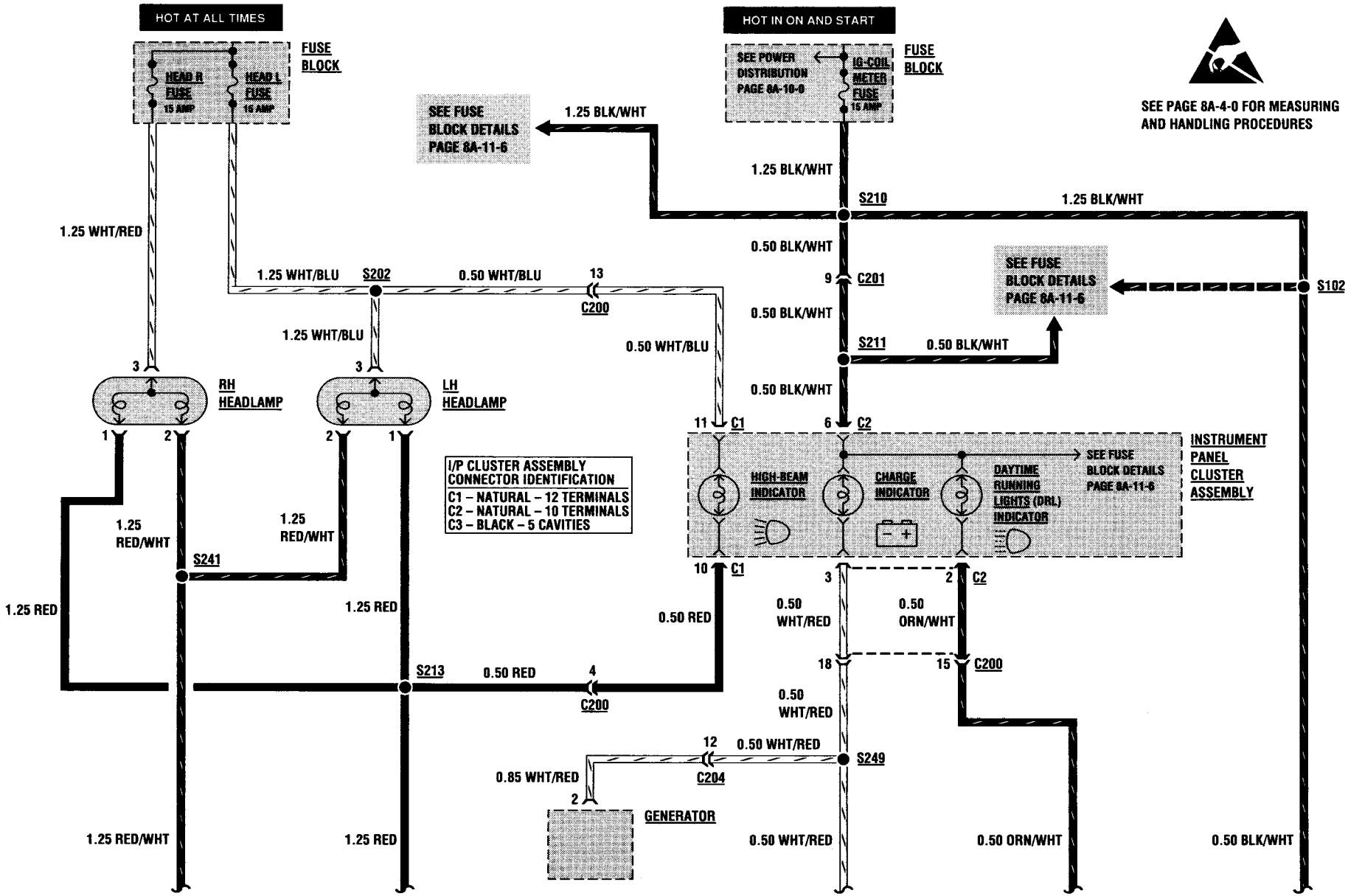

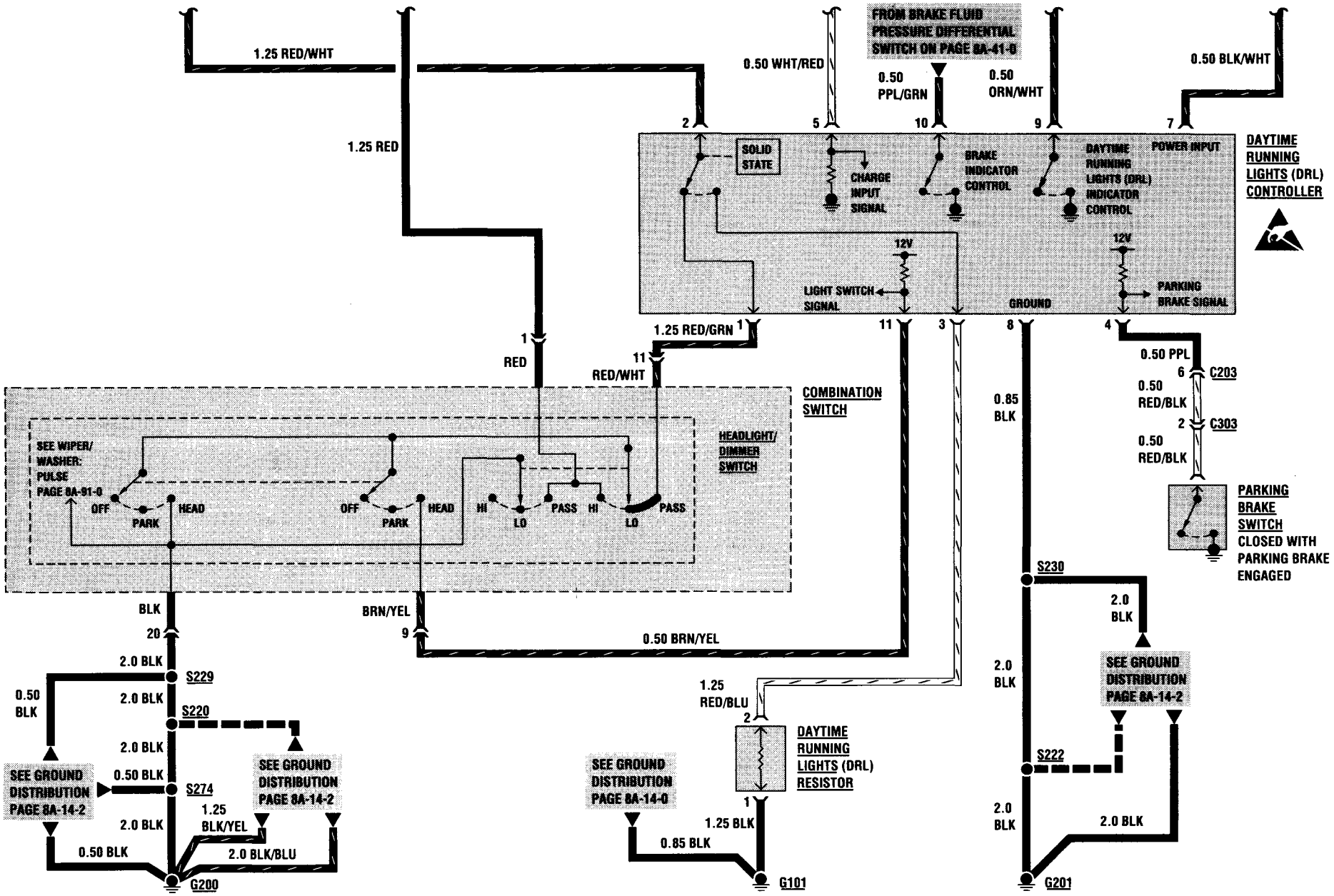
1.25 RED/WHT
1.25 RED
0.50 WHT/RED
FROM BRAKE FLUID PRESSURE DIFFERENTIAL SWITCH ON PAGE 8A-41-0
0.50 PPL/GRN
0.50 ORN/WHT
0.50 BLK/WHT
SOLID STATE
CHARGE INPUT SIGNAL
BRAKE INDICATOR CONTROL
DAYTIME RUNNING LIGHTS (DRL) INDICATOR CONTROL
POWER INPUT
DAYTIME RUNNING LIGHTS (DRL) CONTROLLER
12V
LIGHT SWITCH SIGNAL
GROUND
PARKING BRAKE SIGNAL
1.25 RED/GRN
RED
RED/WHT
COMBINATION SWITCH
HEADLIGHT/ DIMMER SWITCH
SEE WIPER/ WASHER: PULSE PAGE 8A-91-0
OFF
PARK
HEAD
HI
LO
PASS
0.50 PPL
C203
0.50 RED/BLK
C303
0.50 RED/BLK
PARKING BRAKE SWITCH CLOSED WITH PARKING BRAKE ENGAGED
0.85 BLK
S230
2.0 BLK
SEE GROUND DISTRIBUTION PAGE 8A-14-2
S222
BLK
BRN/YEL
0.50 BRN/YEL
S229
S220
S274
0.50 BLK
2.0 BLK
1.25 BLK/YEL
2.0 BLK/BLU
G200
1.25 RED/BLU
DAYTIME RUNNING LIGHTS (DRL) RESISTOR
SEE GROUND DISTRIBUTION PAGE 8A-14-0
1.25 BLK
0.85 BLK
G101
G201

HEADLIGHTS: DAYTIME RUNNING LIGHTS

COMPONENT	LOCATION	FIGURE	CONNECTOR
Combination Switch	On Steering Column	201-05/A	202-00/A1
Daytime Running Lights (DRL) Controller	Behind I/P left of Steering Column	201-05/A	102-08
Daytime Running Lights (DRL) Resistor	Inside RH Fender above Wheelhousing		
Fuse Block	Under I/P left of Steering Column	201-05/A	
Generator	RH front of Engine	201-04/A	
Instrument Panel Cluster Assembly	LH I/P	201-06/A	
C1 (12 Terminals)	I/P Harness to I/P Cluster Assembly, behind I/P Cluster Assembly	201-06/A	81-08
C2 (10 Terminals)	I/P Harness to I/P Cluster Assembly, behind I/P Cluster Assembly	201-06/A	81-08
Parking Brake Switch	Front Passenger Compartment between Seats	201-07/A	
C200 (22 Cavities)	I/P Harness to Main Harness, behind I/P left of Steering Column	201-05/A	202-01/A1
C201 (10 Cavities)	I/P Harness to Main Harness, behind I/P left of Steering Column	201-05/A	202-02/A1
C203 (8 Cavities)	Main Harness to Floor Harness 1, behind I/P left of Steering Column	201-05/A	202-07/C2
C204 (22 Cavities)	Main Harness to Engine Harness, behind I/P left of Steering Column	201-05/A	202-04/A1
C303 (4 Cavities)	Floor Harness 1 to Floor Harness 2, behind LH Rear Passenger Compartment Trim Panel	201-07/A	202-06/B3
S102	Main Harness, at Bulkhead near Front Wiper Motor	201-03/A	
S202	Main Harness, behind LH I/P near Fuse Block	201-05/A	
S210	Main Harness, behind LH I/P near Fuse Block	201-05/A	
S211	I/P Harness, behind I/P near LH Front Speaker	201-06/A	
S213	Main Harness, behind I/P left of Steering Column	201-05/A	
S220	Main Harness, behind I/P left of Steering Column	201-05/A	
S222	Main Harness, behind Center I/P near Blower Speed Selector Switch	201-05/A	
S229	Main Harness, behind I/P left of Steering Column	201-05/A	
S230	Main Harness, behind I/P left of Steering Column	201-05/A	
S241	Main Harness, behind I/P left of Steering Column	201-05/A	
S249	Main Harness, behind I/P left of Steering Column	201-05/A	
S274	Main Harness, behind LH I/P near ECM	201-05/A	
G101	RH Front Engine Compartment near Washer Fluid Reservoir	201-01/A	
G200	Behind LH I/P above Fuse Block	201-05/A	
G201	Behind RH I/P near Blower Assembly	201-05/A	

HEADLIGHTS: DAYTIME RUNNING LIGHTS

TROUBLESHOOTING HINTS

1. Check the HEAD L and the HEAD R Fuses with a fuse tester.
2. Check IG-COIL METER Fuse by turning ignition switch to "ON" and observing INSTRUMENT PANEL CLUSTER ASSEMBLY Indicators.
3. Check that G101, G200 and G201 are clean and tight.
4. Check Headlamp bulbs.

SYSTEM DIAGNOSIS

HEADLIGHTS: DAYTIME RUNNING LIGHTS — DIAGNOSTIC CHART A

	TEST	RESULT	ACTION
A1.	Turn the Headlight Switch to the HEAD position and the Dimmer Switch to the LOW position.	Low-beam HEADLAMPS operate.	GO TO **A2.**
		Low-beam HEADLAMPS do not operate.	GO TO **A7.**
A2.	Push the Dimmer Switch forward to the HIGH position.	High-beam HEADLAMPS operate.	GO TO **A3.**
		High-beam HEADLAMPS do not operate.	GO TO **A11.**
A3.	Pull the Dimmer Switch back to the PASS position.	High-beam HEADLAMPS do not operate while switch is held.	Replace COMBINATION SWITCH.
		High-beam HEADLAMPS operate while switch is held.	GO TO **A4.**
A4.	Turn Headlight Switch to the OFF or PARK position. Start engine.	Daytime Running Lights operate and Daytime Running Lights (DRL) Indicator lights.	GO TO **A5.**
		Daytime Running Lights do not operate.	GO TO **A12.**
		Daytime Running Lights operate but Daytime Running Lights (DRL) Indicator does not light.	GO TO **A23.**

HEADLIGHTS: DAYTIME RUNNING LIGHTS

SYSTEM DIAGNOSIS

HEADLIGHTS: DAYTIME RUNNING LIGHTS DIAGNOSTIC CHART A (CONT'D)

	TEST	RESULT	ACTION
A5.	Apply parking brake.	Daytime Running Lights operation stops and Daytime Running Lights (DRL) Indicator goes out.	GO TO **A6.**
		Daytime Running Lights continue to operate.	GO TO **A26.**
		Daytime Running Lights operation stops, but Daytime Running Lights (DRL) Indicator remains lit.	GO TO **A28.**
A6.	Shut engine off and disengage parking brake. Turn ignition switch to "ON."	Daytime Running Lights do not operate.	All systems diagnosed in this cell are functioning normally.
		Daytime Running Lights continue to operate.	GO TO **A29.**
A7.	Disconnect DAYTIME RUNNING LIGHTS (DRL) CONTROLLER connector. Connect a fused jumper from DRL CONTROLLER connector cavity 2 to chassis ground.	Low-beam HEADLAMPS do not operate.	Repair open in RED/WHT wire or WHT/RED or WHT/BLU wire between HEADLAMPS and FUSE BLOCK and DRL CONTROLLER.
		Low-beam HEADLAMPS operate.	GO TO **A8.**
A8.	Connect a digital multimeter from DRL CONTROLLER connector cavity 1 to chassis ground. Measure resistance.	Less than 0.3 ohms.	Replace DRL CONTROLLER.
		More than 0.3 ohms.	GO TO **A9.**
A9.	Backprobe COMBINATION SWITCH connector with a digital multimeter from cavity 11 to chassis ground. Measure resistance.	Less than 0.3 ohms.	Repair open in RED/GRN wire.
		More than 0.3 ohms.	GO TO **A10.**
A10.	Backprobe COMBINATION SWITCH connector with a digital multimeter from cavity 20 to chassis ground. Measure resistance.	Less than 0.3 ohms.	Replace COMBINATION SWITCH.
		More than 0.3 ohms.	Repair BLK ground wire between COMBINATION SWITCH and G200.
A11.	Disconnect COMBINATION SWITCH connector. Connect a digital multimeter from COMBINATION SWITCH connector (switch side) cavity 1 to cavity 20. Measure resistance.	Less than 0.3 ohms.	Repair open in RED wire between HEADLAMPS and COMBINATION SWITCH.
		More than 0.3 ohms.	Replace COMBINATION SWITCH.
A12.	Turn ignition switch to "LOCK." Disconnect DAYTIME RUNNING LIGHTS (DRL) CONTROLLER connector. Connect a digital multimeter from DRL CONTROLLER connector cavity 8 to chassis ground. Measure resistance.	More than 3.0 ohms.	Repair BLK ground wire between DRL CONTROLLER and G201.
		Less than 3.0 ohms.	GO TO **A13.**

HEADLIGHTS: DAYTIME RUNNING LIGHTS

SYSTEM DIAGNOSIS

HEADLIGHTS: DAYTIME RUNNING LIGHTS DIAGNOSTIC CHART A (CONT'D)

	TEST	RESULT	ACTION
A13.	Turn ignition switch to "ON." Connect a test lamp from DRL CONTROLLER connector cavity 7 to chassis ground.	Test lamp does not light.	Repair open in BLK/WHT wire between FUSE BLOCK and DRL CONTROLLER.
		Test lamp lights.	GO TO **A14.**
A14.	Turn ignition switch to "LOCK." Connect a digital multimeter from DRL CONTROLLER connector cavity 11 to chassis ground. Measure resistance.	Less than infinite.	GO TO **A15.**
		Infinite.	GO TO **A16.**
A15.	Disconnect COMBINATION SWITCH connector. Connect a digital multimeter from COMBINATION SWITCH connector (switch side) cavity 9 to chassis ground. Measure resistance.	Less than infinite.	Replace COMBINATION SWITCH.
		Infinite.	Repair short to ground in BRN/YEL wire.
A16.	Start engine. Connect a digital multimeter from DRL CONTROLLER connector cavity 5 to chassis ground. Measure voltage.	Less than 10.0 volts.	GO TO **A17.**
		More than 10.0 volts.	GO TO **A18.**
A17.	Backprobe GENERATOR connector with a digital multimeter from cavity 2 to chassis ground. Measure voltage.	More than 10.0 volts.	Repair open in WHT/RED wire between GENERATOR and DRL CONTROLLER.
		Less than 10.0 volts.	A fault exists in the GENERATOR Charge Warning Circuit. Refer to Cell 30.
A18.	Connect a digital multimeter from DRL CONTROLLER connector cavity 3 to chassis ground. Measure resistance.	Infinite.	GO TO **A19.**
		Less than infinite.	GO TO **A21.**
A19.	Disconnect DRL RESISTOR connector. Connect a digital multimeter from DRL CONTROLLER connector cavity 3 to DRL RESISTOR connector cavity 2. Measure resistance.	More than 3.0 ohms.	Repair open in RED/BLU wire.
		Less than 3.0 ohms.	GO TO **A20.**
A20.	Connect a digital multimeter from DRL RESISTOR connector cavity 1 to chassis ground. Measure resistance.	More than 3.0 ohms.	Repair BLK ground wire between DRL RESISTOR and G101.
		Less than 3.0 ohms.	Replace DRL RESISTOR.
A21.	Connect a digital multimeter from DRL CONTROLLER connector cavity 4 to chassis ground. Measure resistance with parking brake fully released.	Infinite.	Replace DRL CONTROLLER.
		Less than infinite.	GO TO **A22.**

HEADLIGHTS: DAYTIME RUNNING LIGHTS

SYSTEM DIAGNOSIS

HEADLIGHTS: DAYTIME RUNNING LIGHTS DIAGNOSTIC CHART A (CONT'D)

	TEST	RESULT	ACTION
A22.	Disconnect PARKING BRAKE SWITCH connector. Connect a digital multimeter from PARKING BRAKE SWITCH connector cavity to chassis ground. Measure resistance.	Less than infinite.	Repair short to ground in PPL or RED/BLK wire.
		Infinite.	Replace PARKING BRAKE SWITCH.
A23.	Turn ignition switch to "LOCK." Disconnect DAYTIME RUNNING LIGHTS (DRL) CONTROLLER connector. Connect a fused jumper from DRL CONTROLLER connector cavity 9 to chassis ground. Turn ignition switch to "ON."	DRL Indicator lights.	Replace DRL CONTROLLER.
		DRL Indicator does not light.	GO TO **A24.**
A24.	Disconnect INSTRUMENT PANEL CLUSTER ASSEMBLY connector C2. Connect a digital multimeter from INSTRUMENT PANEL CLUSTER ASSEMBLY connector C2 terminal 2 to DRL CONTROLLER connector cavity 9. Measure resistance.	More than 0.3 ohms.	Repair open in ORN/WHT wire.
		Less than 0.3 ohms.	GO TO **A25.**
A25.	Connect a test lamp from INSTRUMENT PANEL CLUSTER ASSEMBLY connector C2 cavity 6 to chassis ground.	Test lamp lights.	Repair/replace INSTRUMENT PANEL CLUSTER printed circuit.
		Test lamp does not light.	Repair open in BLK/WHT wire between FUSE BLOCK and INSTRUMENT PANEL CLUSTER ASSEMBLY.
A26.	Turn ignition switch to "LOCK." Disconnect DAYTIME RUNNING LIGHTS (DRL) CONTROLLER connector. Connect a digital multimeter from DRL CONTROLLER connector cavity 4 to chassis ground. Measure resistance with parking brake engaged.	Less than 3.0 ohms.	Replace DRL CONTROLLER.
		More than 3.0 ohms.	GO TO **A27.**
A27.	Backprobe PARKING BRAKE SWITCH connector with a digital multimeter from connector cavity to chassis ground. Measure resistance with parking brake engaged.	Less than 3.0 ohms.	Repair open in PPL or RED/BLK wire.
		More than 3.0 ohms.	Replace PARKING BRAKE SWITCH.
A28.	Turn ignition switch to "LOCK." Disconnect DAYTIME RUNNING LIGHTS (DRL) CONTROLLER connector. Turn ignition switch to "ON."	DRL Indicator lights.	Repair short to ground in ORN/WHT wire.
		DRL Indicator does not light.	Replace DRL CONTROLLER.
A29.	Disconnect DAYTIME RUNNING LIGHTS (DRL) CONTROLLER connector. Connect a digital multimeter from DRL CONTROLLER connector cavity 5 to chassis ground. Measure voltage.	Less than 1.0 volt.	Replace DRL CONTROLLER.
		More than 1.0 volt.	A fault exists in the GENERATOR Charge Warning Circuit. Refer to Cell 30.

HEADLIGHTS: DAYTIME RUNNING LIGHTS

For component replacement procedures, refer to the section listed below.

COMPONENT	SECTION
Combination Switch (with tilt wheel)	Section 3F1
Combination Switch (without tilt wheel)	Section 3F2
Daytime Running Lights (DRL) Controller	Section 8C
Daytime Running Lights (DRL) Resistor	Section 8C
Instrument Panel Cluster Printed Circuit	Section 8C
Parking Brake Switch	Section 5

CIRCUIT OPERATION

The HEADLAMPS receive battery voltage through the HEAD L and HEAD R Fuses at all times. When the Headlight Switch is in the HEAD position, a ground is provided through the DAYTIME RUNNING LIGHTS (DRL) CONTROLLER and the Headlight/Dimmer Switch at G200. When the Headlight Switch is in the OFF or PARK position, a ground is provided through the DAYTIME RUNNING LIGHTS (DRL) CONTROLLER and the DAYTIME RUNNING LIGHTS (DRL) RESISTOR at G101 provided that all conditions for Daytime Running Lights operation are met. High and low-beam selection is provided by grounding the high and low-beam filaments separately. The high-beam filaments are grounded through the Headlight/Dimmer Switch at G200. The low-beam filaments are grounded through the DAYTIME RUNNING LIGHTS (DRL) CONTROLLER and the Headlight/Dimmer Switch at G200.

The Daytime Running Lights (DRL) system operates the low-beam HEADLAMPS at a lower intensity than the vehicle's regular low-beams. Daytime Running Light system operation is initiated when the DAYTIME RUNNING LIGHTS (DRL) CONTROLLER senses all of the following:

- A charge input signal from the GENERATOR at terminal 5, indicating an "engine running" condition.
- No ground signal from the PARKING BRAKE SWITCH at terminal 4, indicating that the parking brake is not engaged.
- A "lights OFF" signal at terminal 11, indicating the Headlight/Dimmer Switch is in either the "OFF" or PARK position.

The DAYTIME RUNNING LIGHTS (DRL) CONTROLLER receives battery voltage for system operation at terminal 7 from the IG-COIL METER Fuse whenever the ignition switch is in the "ON" or "START" position. The DAYTIME RUNNING LIGHTS (DRL) CONTROLLER is permanently grounded at G201 through terminal 8.

DAYTIME RUNNING LIGHTS (DRL) CONTROLLER CONNECTOR

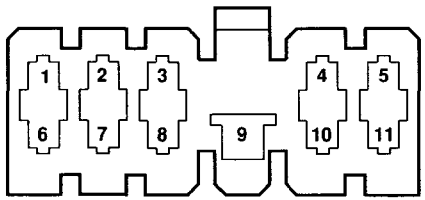

NATURAL

WIRING DETAIL LEGEND

CAVITY	WIRE COLOR	CIRCUIT
1	RED/GRN	Headlight/Dimmer Switch
2	RED/WHT	Headlamps
3	RED/BLU	Daytime Running Lights (DRL) Resistor
4	PPL	Parking Brake Signal
5	WHT/RED	Generator (Charge Input Signal)
6	—	Not Used
7	BLK/WHT	Power Input — IG-COIL METER Fuse
8	BLK	Ground — G200/G201
9	ORN/WHT	Daytime Running Lights (DRL) Indicator Control
10	PPL/GRN	"BRAKE" Indicator Control
11	BRN/YEL	Headlight/Dimmer Switch (Light Switch Signal)

BLANK

EXTERIOR LIGHTS: PARK/FRONT MARKER/TAIL/REAR MARKER/LICENSE PLATE

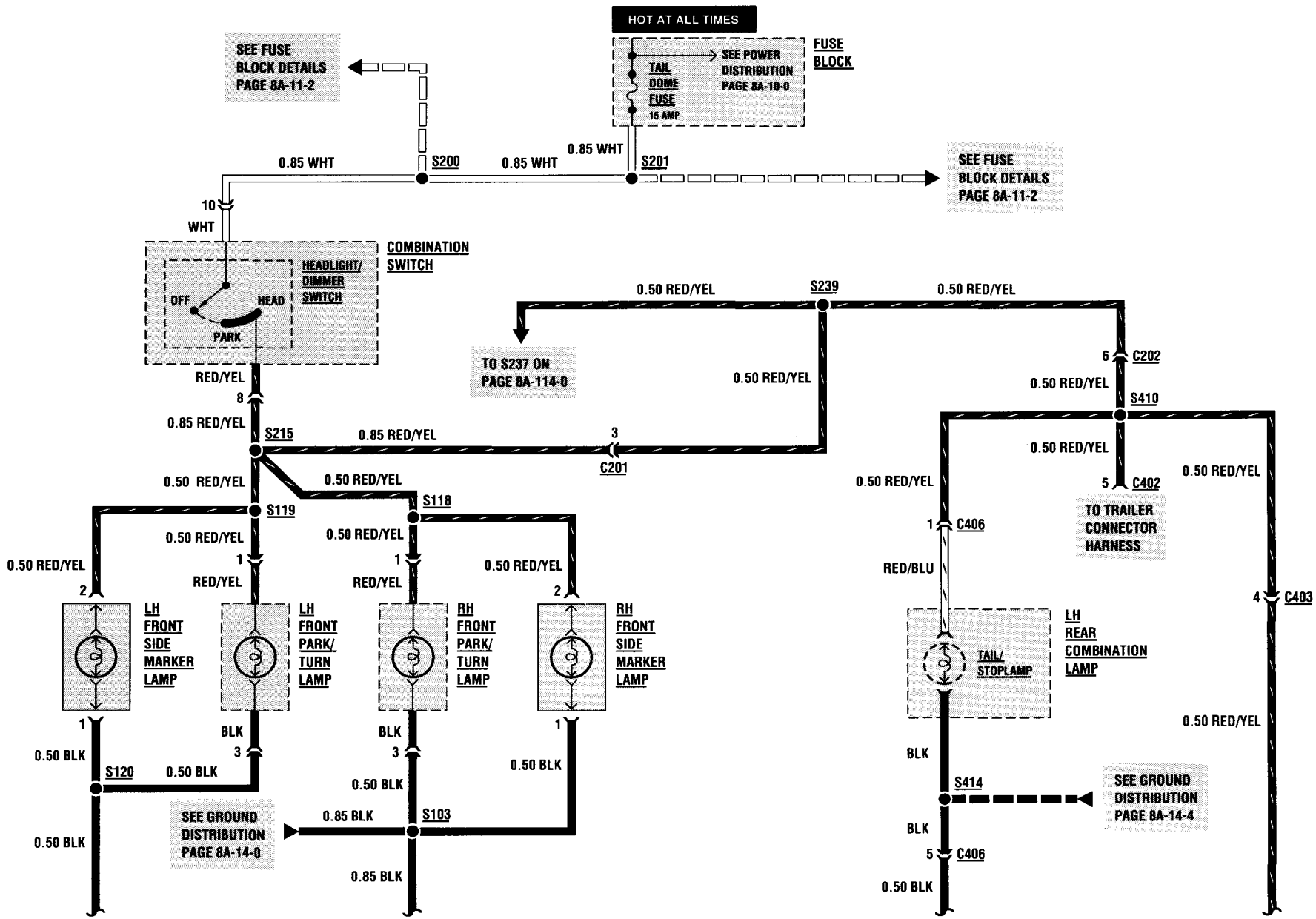

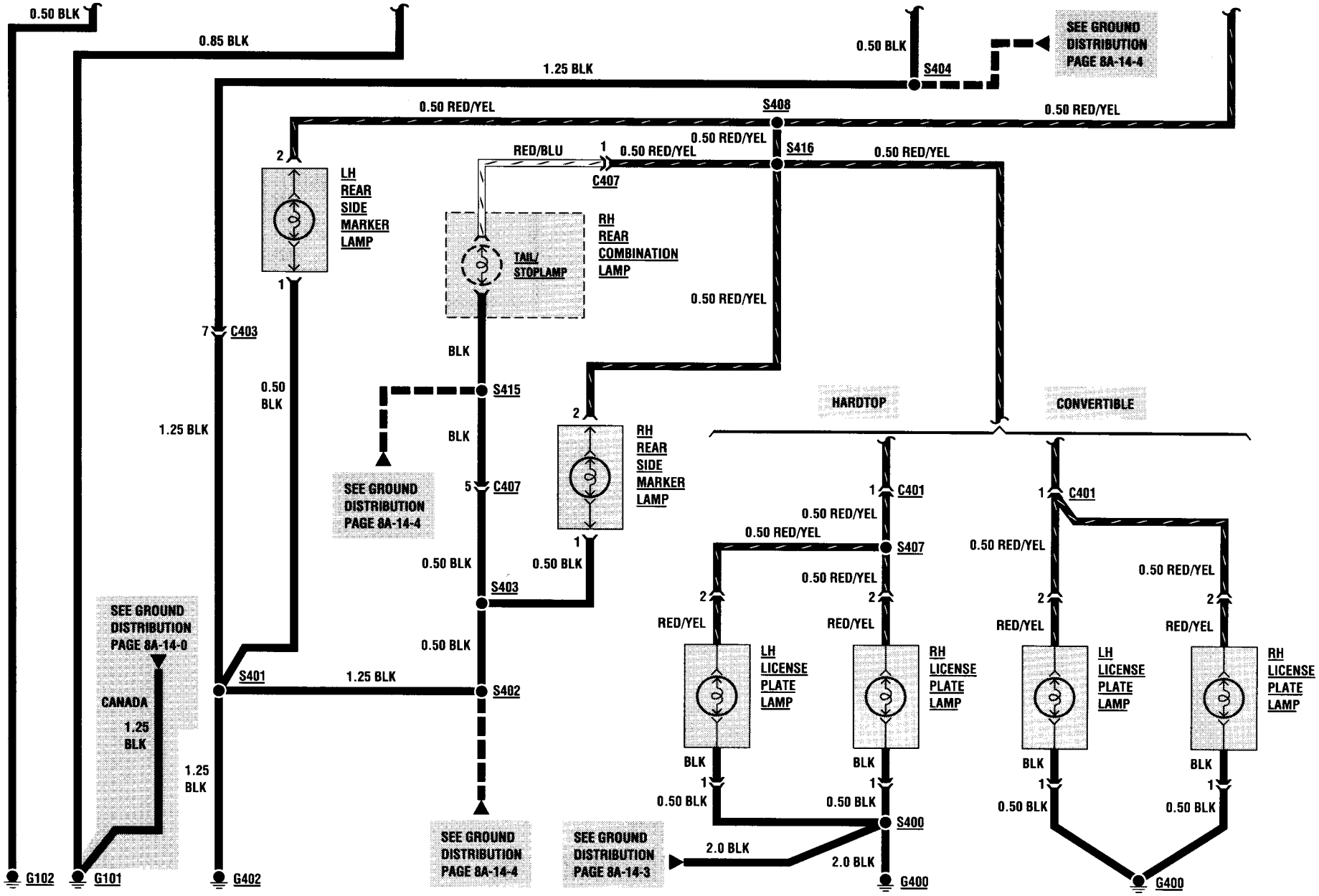
0.50 BLK
0.85 BLK
1.25 BLK
0.50 BLK
S404
SEE GROUND DISTRIBUTION PAGE 8A-14-4
0.50 RED/YEL
S408
0.50 RED/YEL
0.50 RED/YEL
RED/BLU
0.50 RED/YEL
S416
0.50 RED/YEL
C407
LH REAR SIDE MARKER LAMP
TAIL/ STOPLAMP
RH REAR COMBINATION LAMP
0.50 RED/YEL
C403
BLK
0.50 BLK
S415
1.25 BLK
BLK
SEE GROUND DISTRIBUTION PAGE 8A-14-4
C407
RH REAR SIDE MARKER LAMP
HARDTOP
CONVERTIBLE
C401
C401
0.50 RED/YEL
0.50 RED/YEL
S407
0.50 RED/YEL
0.50 RED/YEL
0.50 RED/YEL
0.50 RED/YEL
0.50 BLK
0.50 BLK
S403
SEE GROUND DISTRIBUTION PAGE 8A-14-0
0.50 BLK
S401
1.25 BLK
S402
CANADA
1.25 BLK
1.25 BLK
RED/YEL
RED/YEL
RED/YEL
RED/YEL
LH LICENSE PLATE LAMP
RH LICENSE PLATE LAMP
LH LICENSE PLATE LAMP
RH LICENSE PLATE LAMP
BLK
BLK
BLK
BLK
0.50 BLK
0.50 BLK
0.50 BLK
0.50 BLK
S400
SEE GROUND DISTRIBUTION PAGE 8A-14-4
SEE GROUND DISTRIBUTION PAGE 8A-14-3
2.0 BLK
2.0 BLK
G102
G101
G402
G400
G400

EXTERIOR LIGHTS: TURN/HAZARD

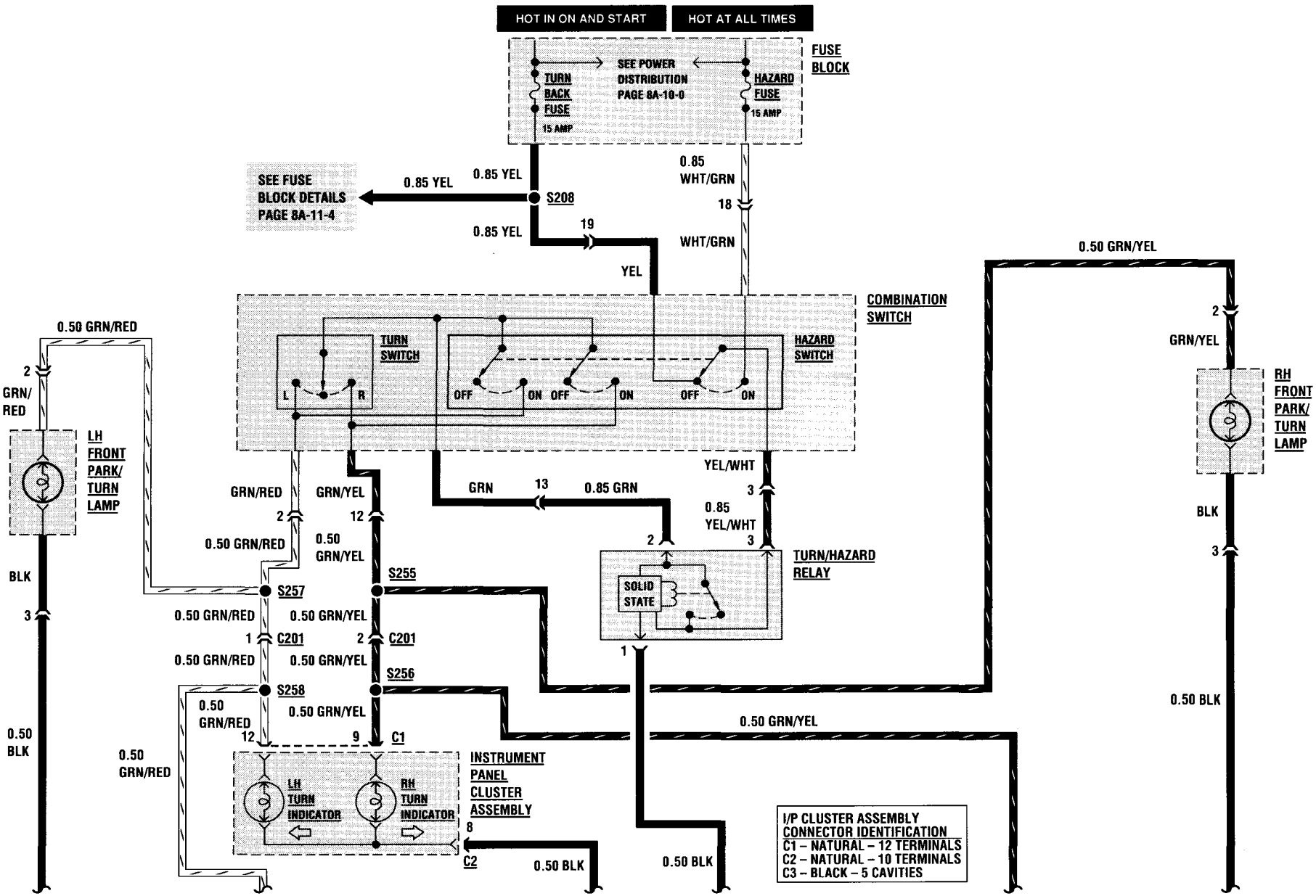

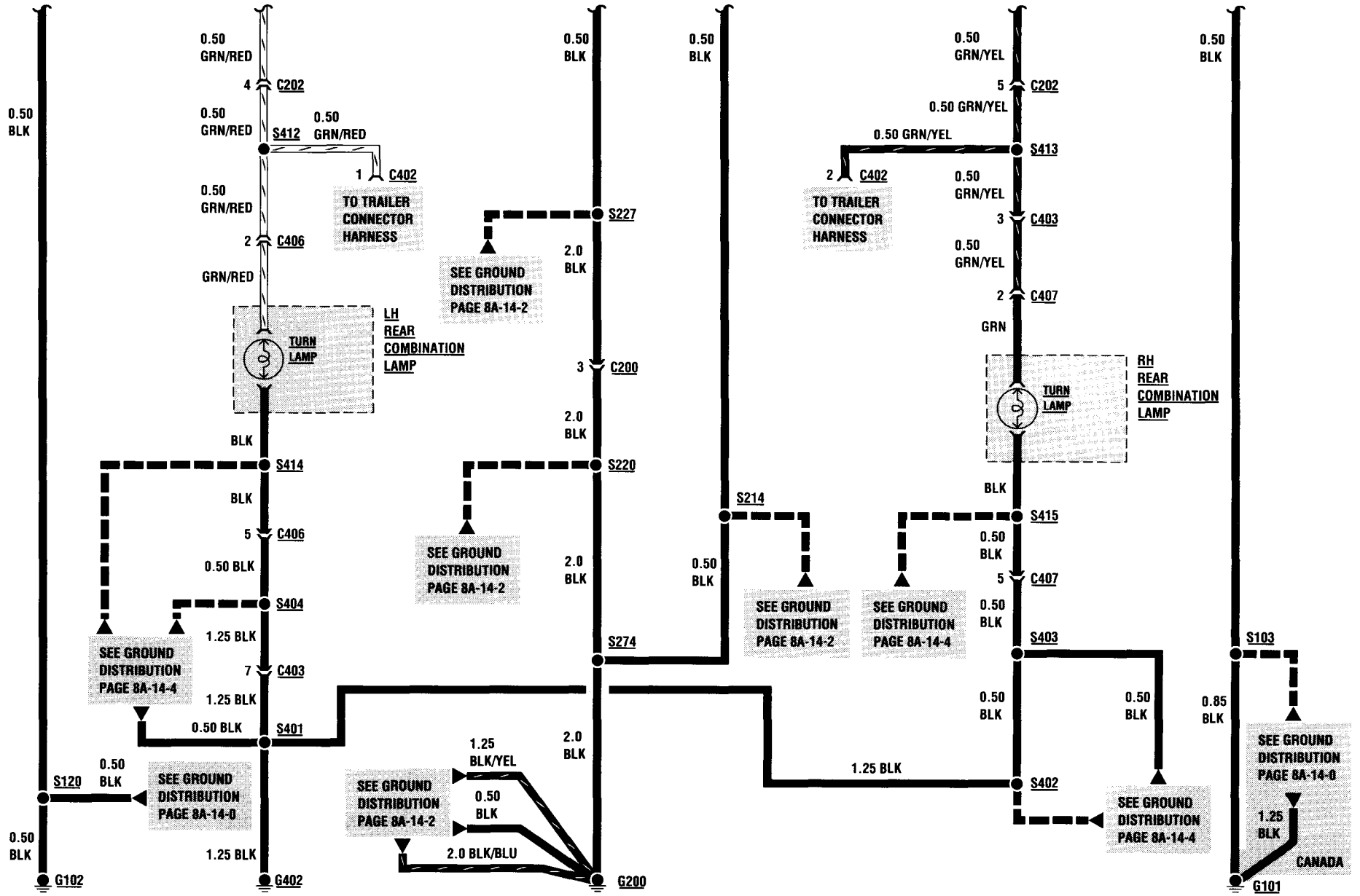
0.50 BLK
0.50 GRN/RED
4 C202
0.50 GRN/RED
S412
0.50 GRN/RED
1 C402
TO TRAILER CONNECTOR HARNESS
0.50 GRN/RED
2 C406
GRN/RED
TURN LAMP
LH REAR COMBINATION LAMP
BLK
S414
BLK
5 C406
0.50 BLK
S404
1.25 BLK
7 C403
1.25 BLK
0.50 BLK
S401
SEE GROUND DISTRIBUTION PAGE 8A-14-4
SEE GROUND DISTRIBUTION PAGE 8A-14-0
S120
0.50 BLK
G102
1.25 BLK
G402
0.50 BLK
S227
2.0 BLK
SEE GROUND DISTRIBUTION PAGE 8A-14-2
3 C200
2.0 BLK
S220
SEE GROUND DISTRIBUTION PAGE 8A-14-2
2.0 BLK
S274
1.25 BLK/YEL
0.50 BLK
2.0 BLK/BLU
SEE GROUND DISTRIBUTION PAGE 8A-14-2
2.0 BLK
G200
0.50 BLK
S214
0.50 BLK
SEE GROUND DISTRIBUTION PAGE 8A-14-2
0.50 GRN/YEL
5 C202
0.50 GRN/YEL
0.50 GRN/YEL
S413
2 C402
TO TRAILER CONNECTOR HARNESS
0.50 GRN/YEL
3 C403
0.50 GRN/YEL
2 C407
GRN
TURN LAMP
RH REAR COMBINATION LAMP
BLK
S415
0.50 BLK
5 C407
0.50 BLK
S403
SEE GROUND DISTRIBUTION PAGE 8A-14-4
SEE GROUND DISTRIBUTION PAGE 8A-14-4
0.50 BLK
0.50 BLK
1.25 BLK
S402
SEE GROUND DISTRIBUTION PAGE 8A-14-4
0.50 BLK
S103
0.85 BLK
SEE GROUND DISTRIBUTION PAGE 8A-14-0
1.25 BLK
CANADA
G101

EXTERIOR LIGHTS: STOP

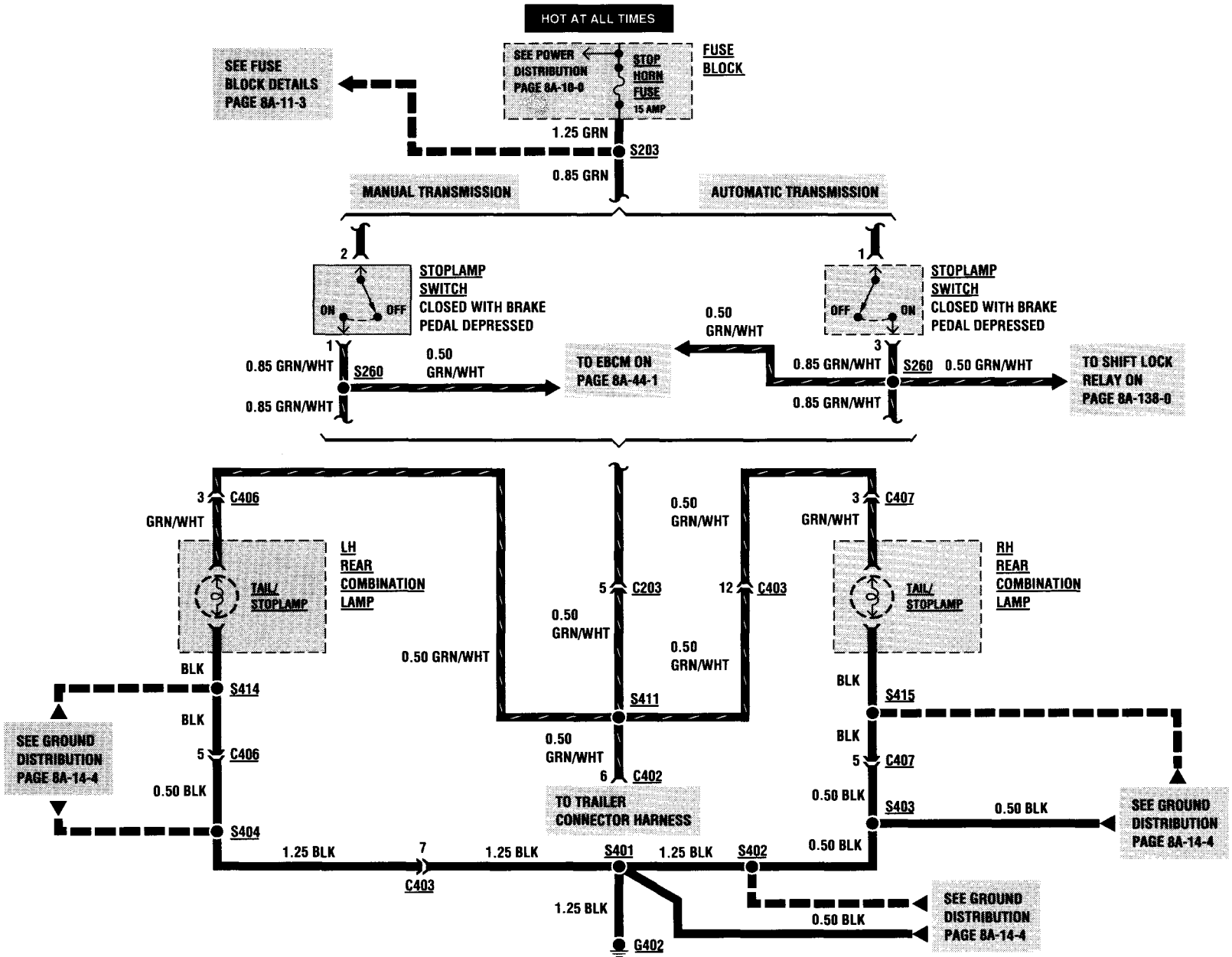

EXTERIOR LIGHTS

COMPONENT	LOCATION	FIGURE	CONNECTOR
Combination Switch	On Steering Column	201-05/A	202-00/A1
Fuse Block	Under I/P left of Steering Column	201-05/A	
Instrument Panel Cluster Assembly	LH I/P	201-06/A	
C1 (12 Terminals)	I/P Harness to I/P Cluster Assembly, behind I/P Cluster Assembly	201-06/A	81-08
C2 (10 Terminals)	I/P Harness to I/P Cluster Assembly, behind I/P Cluster Assembly	201-06/A	81-08
Stoplamp Switch	Under LH I/P above Brake Pedal		
	(Manual Transmission)	201-05/A	
	(Automatic Transmission)	201-05/A	202-07/C3
Turn/Hazard Relay	Under LH I/P mounted to ECM	201-05/A	
C200 (22 Cavities)	I/P Harness to Main Harness, behind I/P left of Steering Column	201-05/A	202-01/A1
C201 (10 Cavities)	I/P Harness to Main Harness, behind I/P left of Steering Column	201-05/A	202-02/A1
C202 (20 Cavities)	I/P Harness to Floor Harness 1, behind I/P left of Steering Column	201-06/A	202-03/A1
C203 (8 Cavities)	Main Harness to Floor Harness 1, behind I/P left of Steering Column	201-05/A	202-07/C2
C401 (2 Cavities)	Rear Lamp Harness to Back Door Harness, behind RH Rear Wheelhousing	201-08/A	
C402 (6 Cavities)	Floor Harness 1 to Trailer Connector Harness, behind LH Rear Wheelhousing	201-07/A	202-07/A1
C403 (12 Cavities)	Floor Harness 1 to Rear Lamp Harness, behind LH Rear Wheelhousing	201-08/A	202-05/A2
C406 (6 Cavities)	Floor Harness 1 to LH Rear Combination Lamp Jumper, behind LH Rear Wheelhousing	201-08/A	202-07/C1
C407 (6 Cavities)	Rear Lamp Harness to RH Rear Combination Lamp Jumper, behind RH Rear Wheelhousing	201-08/A	202-07/C1
S103	Main Harness, behind RH Headlamp	201-01/A	
S118	Main Harness, behind RH Headlamp	201-01/A	
S119	Main Harness, behind LH Headlamp	201-00/A	
S120	Main Harness, behind LH Headlamp	201-00/A	
S200	Main Harness, behind I/P left of Steering Column	201-05/A	
S201	Main Harness, behind I/P left of Steering Column	201-05/A	
S203	Main Harness, behind I/P left of Steering Column	201-05/A	
S208	Main Harness, behind LH I/P near Fuse Block	201-05/A	
S214	Main Harness, behind I/P left of Steering Column	201-05/A	
S215	Main Harness, behind I/P left of Steering Column	201-05/A	
S220	Main Harness, behind I/P left of Steering Column	201-05/A	

EXTERIOR LIGHTS

COMPONENT	LOCATION	FIGURE	CONNECTOR
S227	I/P Harness, behind Center I/P near Radio	201-06/A	
S239	I/P Harness, behind I/P near LH Front Speaker	201-06/A	
S255	Main Harness, behind I/P left of Steering Column	201-05/A	
S256	I/P Harness, behind I/P near LH Front Speaker	201-06/A	
S257	Main Harness, behind LH I/P near ECM	201-05/A	
S258	I/P Harness, behind I/P near LH Front Speaker	201-06/A	
S260	Main Harness, behind Center I/P near Blower Speed Selector Switch	201-05/A	
S274	Main Harness, behind LH I/P near ECM	201-05/A	
S400 (Hardtop)	Back Door Harness, near License Plate Lamps	201-09/A	
S401	Rear Lamp Harness, near LH Rear Combination Lamp	201-08/A	
S402	Rear Lamp Harness, near RH Rear Combination Lamp	201-08/A	
S403	Rear Lamp Harness, near RH Rear Combination Lamp	201-08/A	
S404	Floor Harness 1, near LH Rear Combination Lamp	201-07/A	
S407 (Hardtop)	Back Door Harness, near License Plate Lamps	201-09/A	
S408	Rear Lamp Harness, near LH Rear Combination Lamp	201-08/A	
S410	Floor Harness 1, behind LH Rear Wheelhousing	201-07/A	
S411	Floor Harness 1, behind LH Rear Wheelhousing	201-07/A	
S412	Floor Harness 1, behind LH Rear Wheelhousing	201-07/A	
S413	Floor Harness 1, behind LH Rear Wheelhousing	201-07/A	
S414	LH Rear Combination Lamp Jumper, near LH Rear Combination Lamp		
S415	RH Rear Combination Lamp Jumper, near RH Rear Combination Lamp		
S416	Rear Lamp Harness, near RH Rear Combination Lamp	201-08/A	
G101	RH Front Engine Compartment near Washer Fluid Reservoir	201-01/A	
G102	LH Front Engine Compartment behind Headlamp	201-00/A	
G200	Behind LH I/P above Fuse Block	201-05/A	
G400	Inside Back Door near License Plate Lamps		
	(Hardtop)	201-09/A	
	(Convertible)	201-10/A	
G402	Behind LH Rear Wheelhousing	201-08/A	

TROUBLESHOOTING HINTS

1. For lamps that will not light:
   - Check that the TAIL DOME, STOP HORN, TURN BACK or HAZARD Fuse is good by checking other lamps powered by the same fuse.
   - Note the condition of the ground wires for the affected lamps.
   - Check that the TURN/HAZARD RELAY is securely mounted into its connector cavities.
2. For lamps that will not go out:
   - Check the lead wire from lamps for a short to voltage.
   - Check that the TURN/HAZARD RELAY is not stuck closed.

CIRCUIT OPERATION

PARK LAMPS

Voltage is applied at all times through the TAIL DOME Fuse to the Headlight/Dimmer Switch. With the Headlight/Dimmer Switch in the PARK or HEAD position, voltage is applied to the LH and RH Front Park/Turn Lamps.

MARKER LAMPS

Voltage is applied at all times through the TAIL DOME Fuse to the Headlight/Dimmer Switch. With the Headlight/Dimmer Switch in the PARK or HEAD position, voltage is applied to the LH and RH Side Marker Lamps.

LICENSE LAMPS

Voltage is applied at all times through the TAIL DOME Fuse to the Headlight/Dimmer Switch. With the Headlight/Dimmer Switch in the PARK or HEAD position, voltage is applied to the LH and RH License Plate Lamps.

TURN LAMPS

With the ignition switch in "ON" or "START," voltage is applied through the TURN BACK Fuse and normally closed pole of the Hazard Switch to the TURN/HAZARD RELAY and Turn Switch. When the Turn Switch is moved to the LEFT TURN position, voltage is applied to the Left Turn Indicator in the INSTRUMENT PANEL CLUSTER ASSEMBLY, the LH FRONT PARK/TURN LAMP, and the LH REAR COMBINATION LAMP (Turn Lamp).

The lamps light immediately and start to flash after the solid state timing unit in the TURN/HAZARD RELAY energizes.

The lamps operate in a similar manner when the Turn Switch is moved to the RIGHT TURN position.

HAZARD LAMPS

Voltage is applied at all times through the HAZARD Fuse to the three normally open poles of the Hazard Switch. With the Hazard Switch pressed, the three normally open poles are closed, and voltage is applied to the Turn Indicators in the INSTRUMENT PANEL CLUSTER ASSEMBLY, FRONT PARK/TURN LAMPS, and the Turn Lamps in the REAR COMBINATION LAMPS.

The solid state timing unit in the TURN/HAZARD RELAY repeatedly opens and closes a direct circuit from the HAZARD Fuse.

STOPLAMPS

Voltage is applied at all times through the STOP HORN Fuse to the normally open STOPLAMP SWITCH. When the brake pedal is depressed, the STOPLAMP SWITCH closes and voltage is applied to the Tail/Stoplamps in the REAR COMBINATION LAMPS. Because the Tail/Stoplamps are dual filament, the Stoplamps will operate even if the Taillamps are already on.

BACKUP LIGHTS

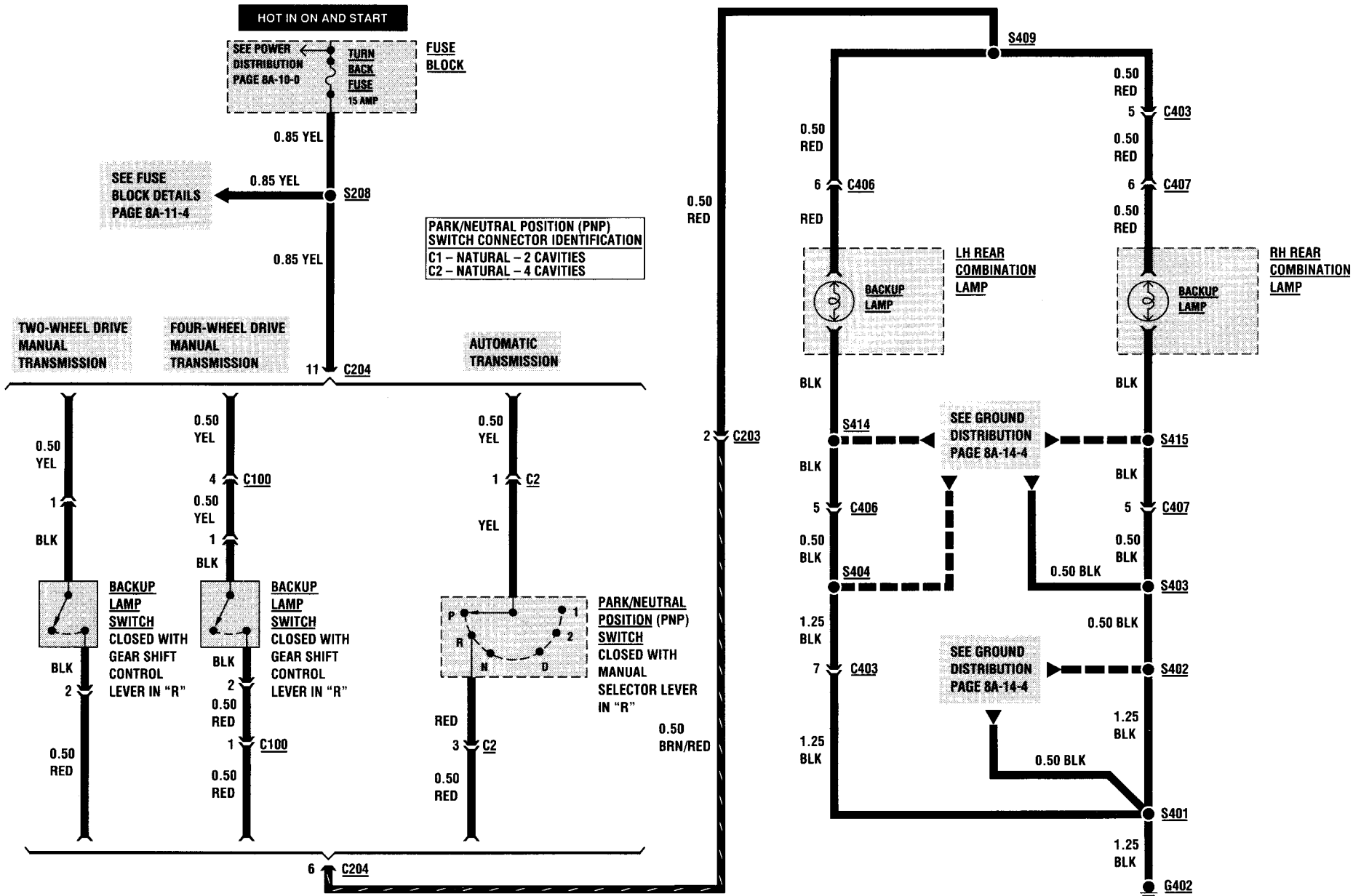

BACKUP LIGHTS

COMPONENT	LOCATION	FIGURE	CONNECTOR
Backup Lamp Switch (Manual Transmission)	Mounted on top of Transmission	201-11/A	
Fuse Block	Under I/P left of Steering Column	201-05/A	
Park/Neutral Position (PNP) Switch (Automatic Transmission)	RH side of Transmission	201-11/A	
C2 (4 Cavities)	Engine Harness to Park/Neutral Position (PNP) Switch, rear of Engine	201-04/A	202-06/A2
C100 (6 Cavities)	Engine Harness to Transmission Harness, RH rear side of Engine	201-04/A	202-07/A2
C203 (8 Cavities)	Main Harness to Floor Harness 1, behind I/P left of Steering Column	201-07/A	202-07/C2
C204 (22 Cavities)	Main Harness to Engine Harness, behind I/P left of Steering Column	201-05/A	202-04/A1
C403 (12 Cavities)	Floor Harness 1 to Rear Lamp Harness, behind LH Rear Wheelhousing	201-08/A	202-05/A2
C406 (6 Cavities)	Floor Harness 1 to LH Rear Combination Lamp Jumper, behind LH Rear Wheelhousing	201-08/A	202-07/C1
C407 (6 Cavities)	Rear Lamp Harness to RH Rear Combination Lamp Jumper, behind RH Rear Wheelhousing	201-08/A	202-07/C1
S208	Main Harness, behind LH I/P near Fuse Block	201-05/A	
S401	Rear Lamp Harness, near LH Rear Combination Lamp	201-08/A	
S402	Rear Lamp Harness, near RH Rear Combination Lamp	201-08/A	
S403	Rear Lamp Harness, near RH Rear Combination Lamp	201-08/A	
S404	Floor Harness 1, near LH Rear Combination Lamp	201-07/A	
S409	Floor Harness 1, near LH Rear Combination Lamp	201-07/A	
S414	LH Rear Combination Lamp Jumper, near LH Rear Combination Lamp		
S415	RH Rear Combination Lamp Jumper, near RH Rear Combination Lamp		
G402	Behind LH Rear Wheelhousing	201-08/A	

BACKUP LIGHTS

TROUBLESHOOTING HINTS

1. Check the TURN BACK Fuse by observing operation of the turn signals.
2. Check that G402 is clean and tight.
3. For vehicles equipped with Automatic Transmission, check for proper adjustment of PARK/NEUTRAL POSITION (PNP) SWITCH. Refer to SECTION 7A.
4. Check Backup Lamp bulbs.

SYSTEM DIAGNOSIS

BACKUP LIGHTS — DIAGNOSTIC CHART A

	TEST	RESULT	ACTION
A1.	Turn ignition switch to "ON." Firmly engage parking brake. Move manual selector to "R."	Backup Lamps light.	GO TO **A2.**
		Backup Lamps do not light.	GO TO **A3** (Manual Transmission). GO TO **A6** (Automatic Transmission).
A2.	Move manual selector to "P" or "N."	Backup Lamps go out.	All systems diagnosed in this cell are functioning normally.
		Backup Lamps remain lit.	GO TO **A9** (Manual Transmission). GO TO **A10** (Automatic Transmission).
A3.	Disconnect BACKUP LAMP SWITCH connector. Connect a digital multimeter from BACKUP LAMP SWITCH terminal 1 to terminal 2 (switch side). Measure resistance.	More than 0.3 ohms.	Replace BACKUP LAMP SWITCH.
		Less than 0.3 ohms.	GO TO **A4.**
A4.	Connect a test lamp from BACKUP LAMP SWITCH connector cavity 1 to chassis ground.	Test lamp does not light.	Repair open in YEL wire between FUSE BLOCK and BACKUP LAMP SWITCH.
		Test lamp lights.	GO TO **A5.**
A5.	Disconnect connectors C406 and C407. Connect a digital multimeter from connector C406/C407 cavity 6 to BACKUP LAMP SWITCH connector cavity 2. Measure resistance.	More than 0.3 ohms.	Repair open in RED or BRN/RED wire between C406/C407 and BACKUP LAMP SWITCH.
		Less than 0.3 ohms	Repair BLK ground wire between REAR COMBINATION LAMP and G402.
A6.	Disconnect PARK/NEUTRAL POSITION SWITCH connector C2. Connect a digital multimeter across PARK/NEUTRAL POSITION SWITCH connector C2 terminals 1 and 3 (switch side). Measure resistance.	More than 0.3 ohms.	Replace PARK/NEUTRAL POSITION SWITCH.
		Less than 0.3 ohms.	GO TO **A7.**

BACKUP LIGHTS

SYSTEM DIAGNOSIS

BACKUP LIGHTS	DIAGNOSTIC CHART A (CONT'D)		
	TEST	RESULT	ACTION
A7.	Disconnect connectors C406 and C407. Connect a digital multimeter from PARK/NEUTRAL POSITION SWITCH connector C2 cavity 3 to connector C406/C407 cavity 6. Measure resistance.	More than 0.3 ohms.	Repair open in RED or BRN/RED wire between PARK/NEUTRAL POSITION SWITCH and C406/C407.
		Less than 0.3 ohms.	GO TO **A8.**
A8.	Connect a test lamp from PARK/NEUTRAL POSITION SWITCH connector C2 cavity 1 to chassis ground.	Test lamp does not light.	Repair open in YEL wire between PARK/NEUTRAL POSITION SWITCH and FUSE BLOCK.
		Test lamp lights.	Repair open in BLK ground wire between REAR COMBINATION LAMP and G402.
A9.	Disconnect BACKUP LAMP SWITCH connector.	Backup Lamps go out.	Replace BACKUP LAMP SWITCH.
		Backup Lamps remain lit.	Repair short to voltage in RED or BRN/RED wire between BACKUP LAMP SWITCH and REAR COMBINATION LAMP.
A10.	Disconnect PARK/NEUTRAL POSITION SWITCH connector C2.	Backup Lamps go out.	Replace PARK/NEUTRAL POSITION SWITCH.
		Backup Lamps remain lit.	Repair short to voltage in RED or BRN/RED wire between PARK/ NEUTRAL POSITION SWITCH and COMBINATION LAMP.

For component replacement procedures, refer to the section listed below.

COMPONENT	SECTION
Backup Lamp Switch	Section 7B
Park/Neutral Position Switch	Section 7A

CIRCUIT OPERATION

Whenever the ignition switch is in either the "ON" or "START" position, battery voltage is applied through the TURN BACK Fuse to the BACKUP LAMP SWITCH (Manual Transmission) or the PARK/ NEUTRAL POSITION SWITCH (Automatic Transmission). When the manual selector is placed in "R," the switch closes and battery voltage is applied to the Backup Lamps in the REAR COMBINATION LAMPS. The REAR COMBINATION LAMPS are permanently grounded at G402.

INTERIOR LIGHTS

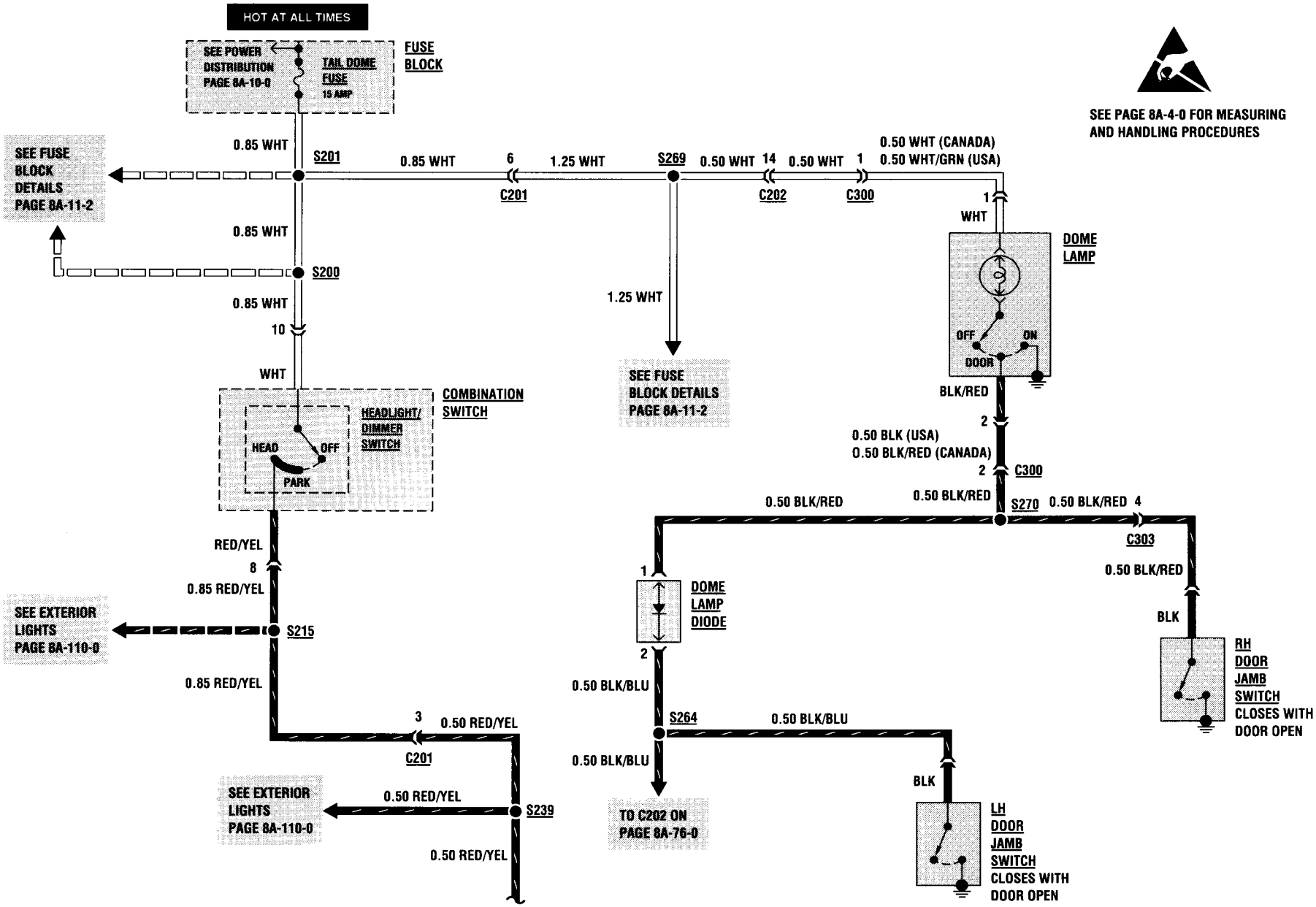

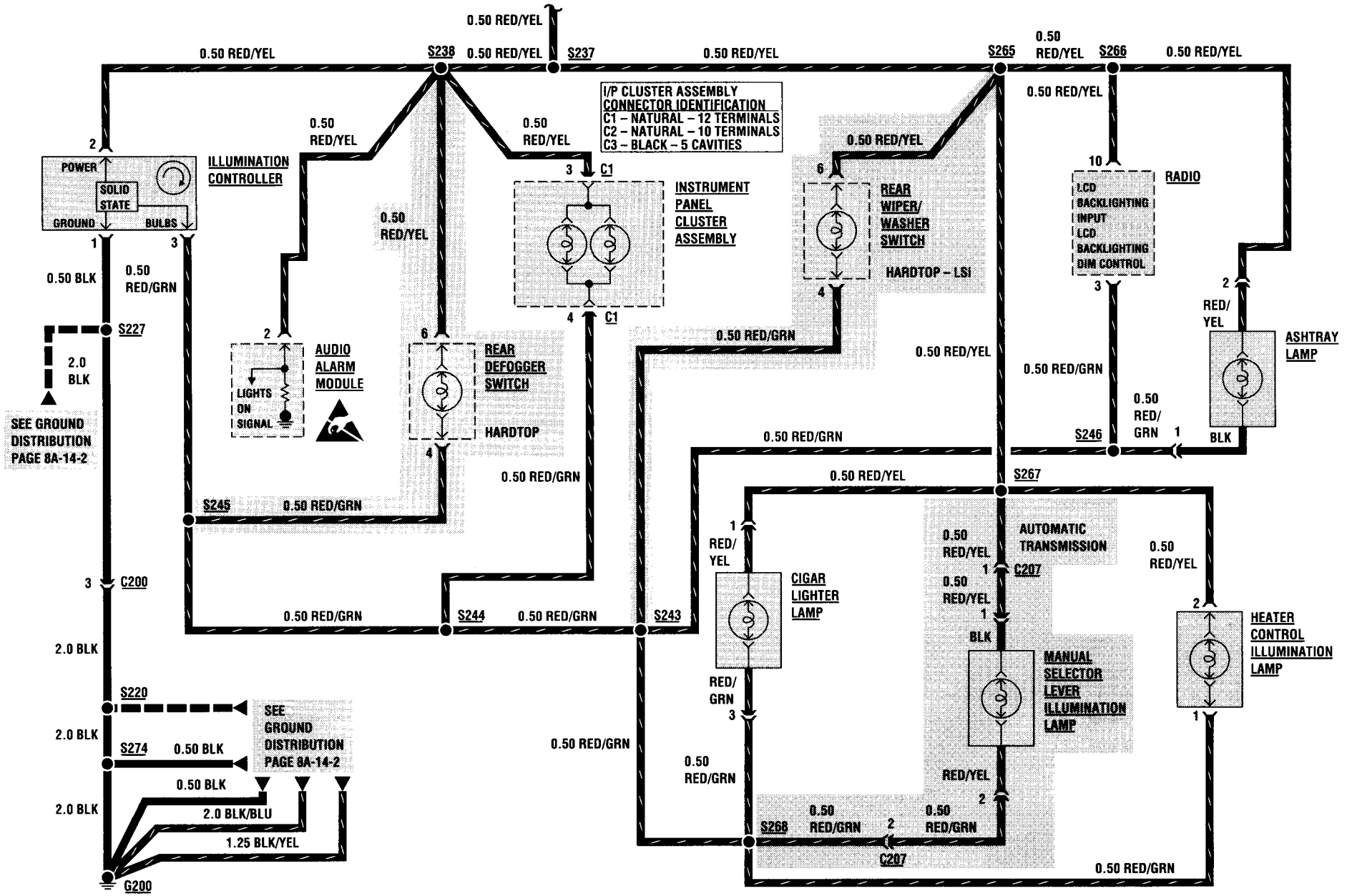
0.50 RED/YEL
S238
S237
S265
S266
I/P CLUSTER ASSEMBLY CONNECTOR IDENTIFICATION
C1 – NATURAL – 12 TERMINALS
C2 – NATURAL – 10 TERMINALS
C3 – BLACK – 5 CAVITIES
POWER
SOLID STATE
GROUND
BULBS
ILLUMINATION CONTROLLER
0.50 RED/YEL
0.50 BLK
0.50 RED/GRN
S227
2.0 BLK
SEE GROUND DISTRIBUTION PAGE 8A-14-2
LIGHTS ON SIGNAL
AUDIO ALARM MODULE
REAR DEFOGGER SWITCH
HARDTOP
INSTRUMENT PANEL CLUSTER ASSEMBLY
C1
REAR WIPER/ WASHER SWITCH
HARDTOP – LSI
0.50 RED/GRN
RADIO
LCD BACKLIGHTING INPUT
LCD BACKLIGHTING DIM CONTROL
RED/ YEL
ASHTRAY LAMP
BLK
S246
S245
S244
S243
S267
C200
CIGAR LIGHTER LAMP
RED/ GRN
AUTOMATIC TRANSMISSION
C207
MANUAL SELECTOR LEVER ILLUMINATION LAMP
HEATER CONTROL ILLUMINATION LAMP
S220
S274
SEE GROUND DISTRIBUTION PAGE 8A-14-2
2.0 BLK/BLU
1.25 BLK/YEL
S268
G200

INTERIOR LIGHTS

COMPONENT	LOCATION	FIGURE	CONNECTOR
Audio Alarm Module	Behind I/P above RH Front Speaker	201-06/A	76-08
Combination Switch	On Steering Column	201-05/A	202-00/A1
Dome Lamp Diode	Behind LH Rear Passenger Compartment Trim Panel	201-07/A	
Fuse Block	Under I/P left of Steering Column	201-05/A	
Illumination Controller	I/P left of Steering Column	201-06/A	
Instrument Panel Cluster Assembly	LH I/P	201-06/A	
C1 (12 Terminals)	I/P Harness to I/P Cluster Assembly, behind I/P Cluster Assembly	201-06/A	81-08
LH Door Jamb Switch	Bottom LH Door Frame	201-07/A	
Radio	Center of I/P	201-06/A	150-15
Rear Defogger Switch (Hardtop)	I/P left of Steering Column	201-06/A	202-07/A3
Rear Wiper/Washer Switch (Hardtop – LSi)	LH I/P right of Steering Column	201-06/A	202-06/B2
RH Door Jamb Switch	Bottom RH Door Frame	201-07/A	
C200 (22 Cavities)	I/P Harness to Main Harness, behind I/P left of Steering Column	201-05/A	202-01/A1
C201 (10 Cavities)	I/P Harness to Main Harness, behind I/P left of Steering Column	201-05/A	202-02/A1
C202 (20 Cavities)	I/P Harness to Floor Harness 1, behind I/P left of Steering Column	201-06/A	202-03/A1
C207 (4 Cavities) (Automatic Transmission)	I/P Harness to Manual Selector Lever Harness, behind Center I/P below Radio	201-06/A	202-07/B1
C300 (2 Cavities)	Floor Harness 1 to Dome Lamp Harness, behind LH Rear Passenger Compartment Trim Panel	201-07/A	
C303 (4 Cavities)	Floor Harness 1 to Floor Harness 2, behind LH Rear Passenger Compartment Trim Panel	201-07/A	202-06/B3
S200	Main Harness, behind I/P left of Steering Column	201-05/A	
S201	Main Harness, behind I/P left of Steering Column	201-05/A	
S215	Main Harness, behind I/P left of Steering Column	201-05/A	
S220	Main Harness, behind I/P left of Steering Column	201-05/A	
S227	I/P Harness, behind Center I/P near Radio	201-06/A	
S237	I/P Harness, behind LH I/P in I/P Cluster Assembly Branch	201-06A	
S238	I/P Harness, behind LH I/P in I/P Cluster Assembly Branch	201-06/A	
S239	I/P Harness, behind I/P near LH Front Speaker	201-06/A	
S243	I/P Harness, behind Center I/P near Radio	201-06/A	
S244	I/P Harness, behind LH I/P in I/P Cluster Assembly Branch	201-06/A	
S245 (Hardtop)	I/P Harness, behind LH I/P in I/P Cluster Assembly Branch	201-06/A	

INTERIOR LIGHTS

COMPONENT	LOCATION	FIGURE	CONNECTOR
S246	I/P Harness, behind Center I/P near Radio	201-06/A	
S264	I/P Harness, behind I/P near LH Front Speaker	201-06/A	
S265	I/P Harness, behind Center I/P near Radio	201-06/A	
S266	I/P Harness, behind Center I/P near Radio	201-06/A	
S267	I/P Harness, behind Center I/P near Cigar Lighter	201-06/A	
S268	I/P Harness, behind Center I/P near Cigar Lighter	201-06/A	
S269	Main Harness, behind LH I/P right of Steering Column	201-05/A	
S270	I/P Harness, behind Center I/P near Radio	201-06/A	
S274	Main Harness, behind LH I/P near ECM	201-05/A	
G200	Behind LH I/P above Fuse Block	201-05/A	

TROUBLESHOOTING HINTS

1. For lamps that will not light:
   - Check that the TAIL DOME Fuse is good by checking other lamps powered by the same fuse.
   - Note the condition of the ground wires for the affected lamps and make repairs as necessary.
2. For lamps that will not go out:
   - Check ground wire from lamps for a short.

BRAKE TRANSMISSION SHIFT INTERLOCK

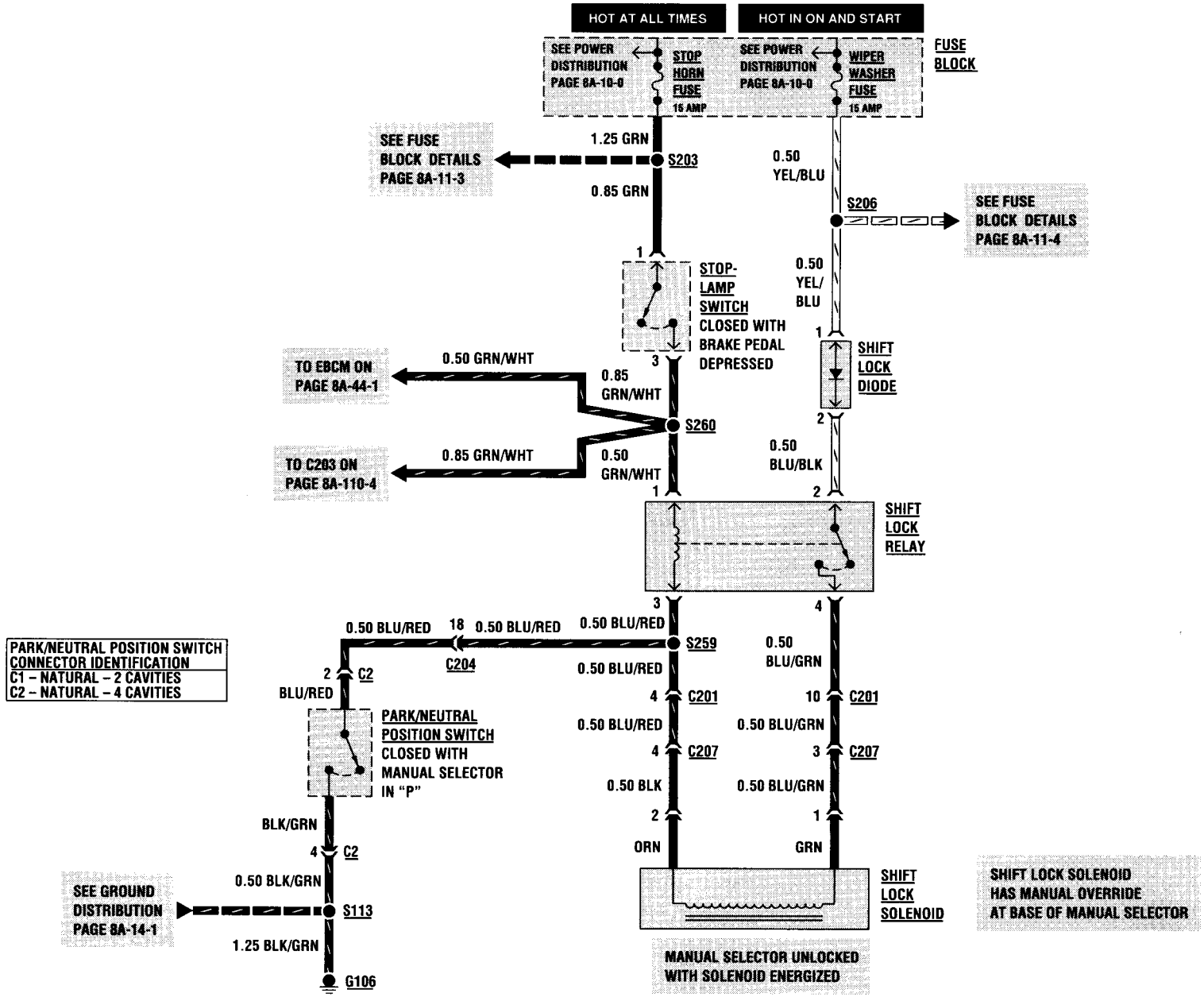

BRAKE TRANSMISSION SHIFT INTERLOCK

COMPONENT	LOCATION	FIGURE	CONNECTOR
Fuse Block	Under I/P left of Steering Column	201-05/A	
Park/Neutral Position Switch	RH side of Transmission	201-11/A	
C2 (4 Cavities)	Engine Harness to Park/Neutral Position Switch, rear of Engine		202-06/A2
Shift Lock Diode	Behind I/P left of Steering Column		
Shift Lock Relay	Under LH I/P above Brake Pedal	201-05/A	202-06/B1
Shift Lock Solenoid	Under Manual Selector	201-12/B	
Stoplamp Switch	Under LH I/P above Brake Pedal	201-05/A	202-07/C3
C201 (10 Cavities)	I/P Harness to Main Harness, behind I/P left of Steering Column	201-05/A	202-02/A1
C204 (22 Cavities)	Main Harness to Engine Harness, behind I/P left of Steering Column	201-05/A	202-04/A1
C207 (4 Cavities)	I/P Harness to Manual Selector Lever Harness, behind Center I/P below Radio	201-06/A	202-07/B1
S113	Engine Harness, RH Engine Compartment above Starter Motor	201-04/A	
S203	Main Harness, behind I/P left of Steering Column	201-05/A	
S206	Main Harness, behind LH I/P near Fuse Block	201-05/A	
S259	Main Harness, behind Center I/P near Blower Speed Selector Switch	201-05/A	
S260	Main Harness, behind Center I/P near Blower Speed Selector Switch	201-05/A	
G106	Front of Engine above Generator	201-04/A	

TROUBLESHOOTING HINTS

1. Check STOP HORN Fuse by pressing horn switch.
2. Check WIPER WASHER Fuse by operating wipers.
3. Check that G106 is clean and tight.

BRAKE TRANSMISSION SHIFT INTERLOCK

SYSTEM DIAGNOSIS

BRAKE TRANSMISSION SHIFT INTERLOCK DIAGNOSTIC CHART A

	TEST	RESULT	ACTION
A1.	Turn ignition switch to "ON." Attempt to move manual selector from "P" position.	Manual selector cannot be moved from "P."	GO TO **A2**.
		Manual selector can be moved from "P."	GO TO **A15**.
A2.	Depress brake pedal, press manual selector button and move manual selector out of "P."	Manual selector can be moved out of "P."	All systems diagnosed in this cell are functioning normally.
		Manual selector cannot be moved out of "P."	GO TO **A3**.
A3.	Backprobe STOPLAMP SWITCH connector with a test lamp from cavity 1 to chassis ground.	Test lamp does not light.	Repair open in GRN wire between FUSE BLOCK and STOPLAMP SWITCH.
		Test lamp lights.	GO TO **A4**.
A4.	Backprobe STOPLAMP SWITCH connector with a test lamp from cavity 3 to chassis ground. Press and hold brake pedal.	Test lamp does not light.	Replace STOPLAMP SWITCH.
		Test lamp lights.	GO TO **A5**.
A5.	Backprobe SHIFT LOCK RELAY connector with a test lamp from cavity 1 to chassis ground. Press and hold brake pedal.	Test lamp does not light.	Repair open in GRN/WHT wire between STOPLAMP SWITCH and SHIFT LOCK RELAY.
		Test lamp lights.	GO TO **A6**.
A6.	Backprobe SHIFT LOCK DIODE connector with a test lamp from cavity 1 to chassis ground.	Test lamp does not light.	Repair open in YEL/BLU wire between FUSE BLOCK and SHIFT LOCK DIODE.
		Test lamp lights.	GO TO **A7**.
A7.	Backprobe SHIFT LOCK DIODE connector with a test lamp from cavity 2 to chassis ground.	Test lamp does not light.	Replace SHIFT LOCK DIODE.
		Test lamp lights.	GO TO **A8**.
A8.	Backprobe SHIFT LOCK RELAY connector with a test lamp from cavity 2 to chassis ground.	Test lamp does not light.	Repair open in BLU/BLK wire between SHIFT LOCK DIODE and SHIFT LOCK RELAY.
		Test lamp lights.	GO TO **A9**.
A9.	Disconnect SHIFT LOCK RELAY connector. Connect a digital multimeter from cavity 3 to chassis ground. Measure resistance with manual selector in "P."	Less than 0.3 ohms.	GO TO **A10**.
		More than 0.3 ohms.	GO TO **A13**.

BRAKE TRANSMISSION SHIFT INTERLOCK

SYSTEM DIAGNOSIS

BRAKE TRANSMISSION SHIFT INTERLOCK DIAGNOSTIC CHART A (CONT'D)

	TEST	RESULT	ACTION
A10.	Reconnect SHIFT LOCK RELAY connector. Backprobe connector with a test lamp from cavity 4 to chassis ground.	Test lamp does not light.	Replace SHIFT LOCK RELAY.
		Test lamp lights.	GO TO **A11**.
A11.	Disconnect SHIFT LOCK RELAY and SHIFT LOCK SOLENOID connectors. Connect a digital multimeter from SHIFT LOCK RELAY connector cavity 4 to SHIFT LOCK SOLENOID connector cavity 1. Measure resistance.	More than 0.3 ohms.	Repair open in BLU/GRN wire between SHIFT LOCK RELAY and SHIFT LOCK SOLENOID.
		Less than 0.3 ohms.	GO TO **A12**.
A12.	Connect a digital multimeter from SHIFT LOCK RELAY connector cavity 3 to SHIFT LOCK SOLENOID connector cavity 2. Measure resistance.	More than 0.3 ohms.	Repair open in BLU/RED wire between S259 and SHIFT LOCK SOLENOID.
		Less than 0.3 ohms.	Replace SHIFT LOCK SOLENOID.
A13.	Disconnect PARK/NEUTRAL POSITION SWITCH connector C2. Connect a digital multimeter across switch terminals 2 and 4. Measure resistance with manual selector in "P."	More than 0.3 ohms.	Replace PARK/NEUTRAL POSITION SWITCH.
		Less than 0.3 ohms.	GO TO **A14**.
A14.	Connect a digital multimeter from PARK/NEUTRAL POSITION SWITCH connector C2 cavity 4 to chassis ground. Measure resistance.	More than 0.3 ohms.	Repair open in BLK/GRN ground wire between PARK/NEUTRAL POSITION SWITCH and G106.
		Less than 0.3 ohms.	Repair open in BLU/RED wire between S259 and PARK/NEUTRAL POSITION SWITCH.
A15.	Disconnect SHIFT LOCK SOLENOID connector. Connect a test lamp from connector cavity 1 to chassis ground.	Test lamp does not light.	Replace SHIFT LOCK SOLENOID.
		Test lamp lights.	GO TO **A16**.
A16.	Disconnect SHIFT LOCK RELAY connector. Connect a test lamp from SHIFT LOCK RELAY connector cavity 4 to chassis ground.	Test lamp lights.	Repair short to voltage in BLU/GRN wire.
		Test lamp does not light.	GO TO **A17**.
A17.	Disconnect STOPLAMP SWITCH connector. Connect a test lamp from STOPLAMP SWITCH connector cavity 3 to chassis ground.	Test lamp lights.	Repair short to voltage in GRN/WHT wire.
		Test lamp does not light.	Replace STOPLAMP SWITCH.

BRAKE TRANSMISSION SHIFT INTERLOCK

For component replacement procedures, refer to the section listed below.

COMPONENT	SECTION
Shift Lock Solenoid	Section 7A
Stoplamp Switch	Section 5
Park/Neutral Position Switch	Section 7A

CIRCUIT OPERATION

Voltage is applied at all times through the STOP HORN Fuse to the STOPLAMP SWITCH. Voltage is also applied through the WIPER WASHER Fuse to the SHIFT LOCK RELAY through the SHIFT LOCK DIODE with the ignition switch in the "ON" and "START" positions. When the brake pedal is pressed, voltage is applied through the closed contacts in the STOPLAMP SWITCH to the coil in the SHIFT LOCK RELAY. The energized relay applies current to the SHIFT LOCK SOLENOID, energizing it. The solenoid is grounded through the PARK/NEUTRAL POSITION SWITCH and G106. The PARK/NEUTRAL POSITION SWITCH prevents the solenoid from energizing when the manual selector is in any position other than "P."

BLANK

RADIO/AUDIO SYSTEM
RADIO ONLY

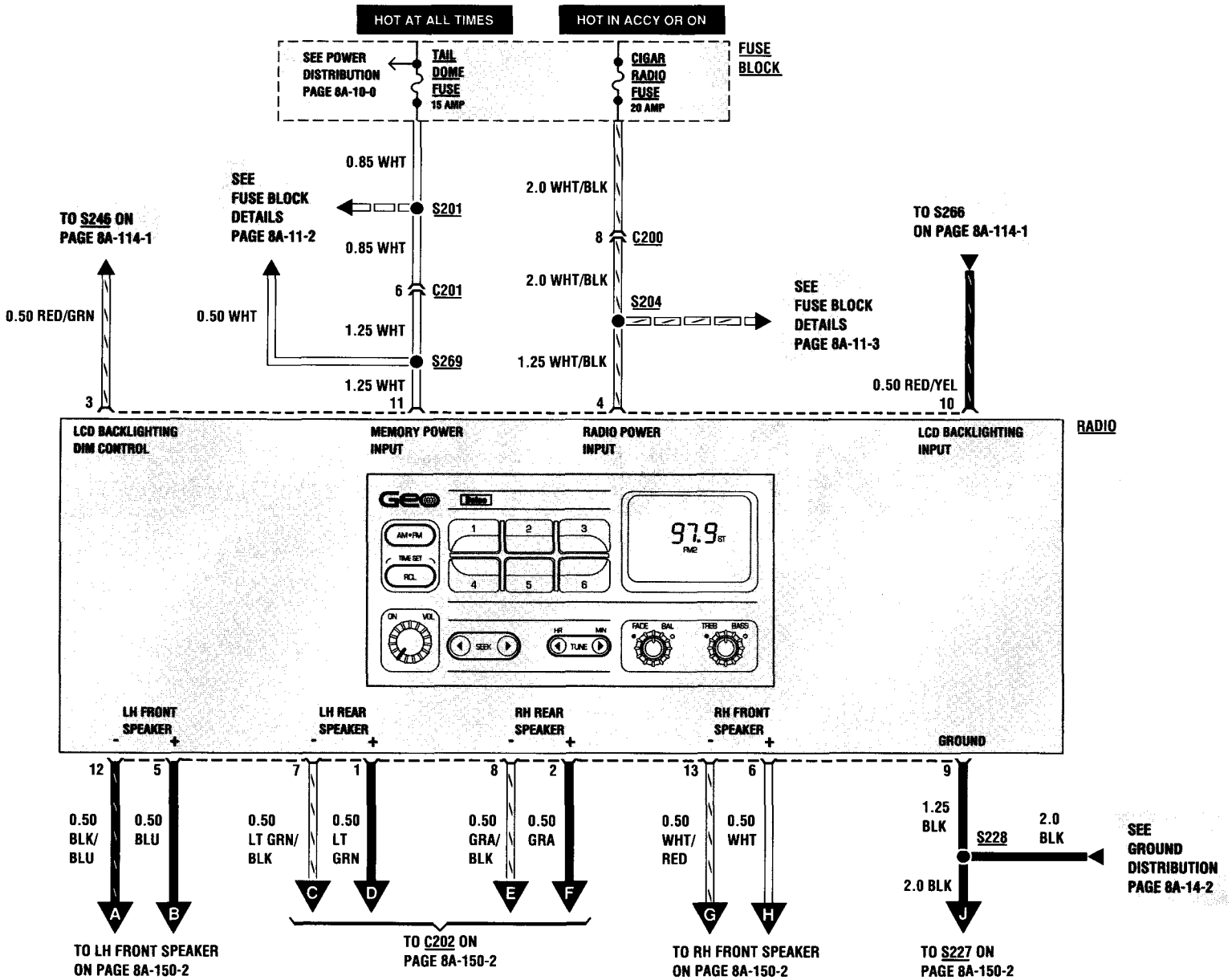

RADIO/AUDIO SYSTEM

RADIO WITH CASSETTE PLAYER

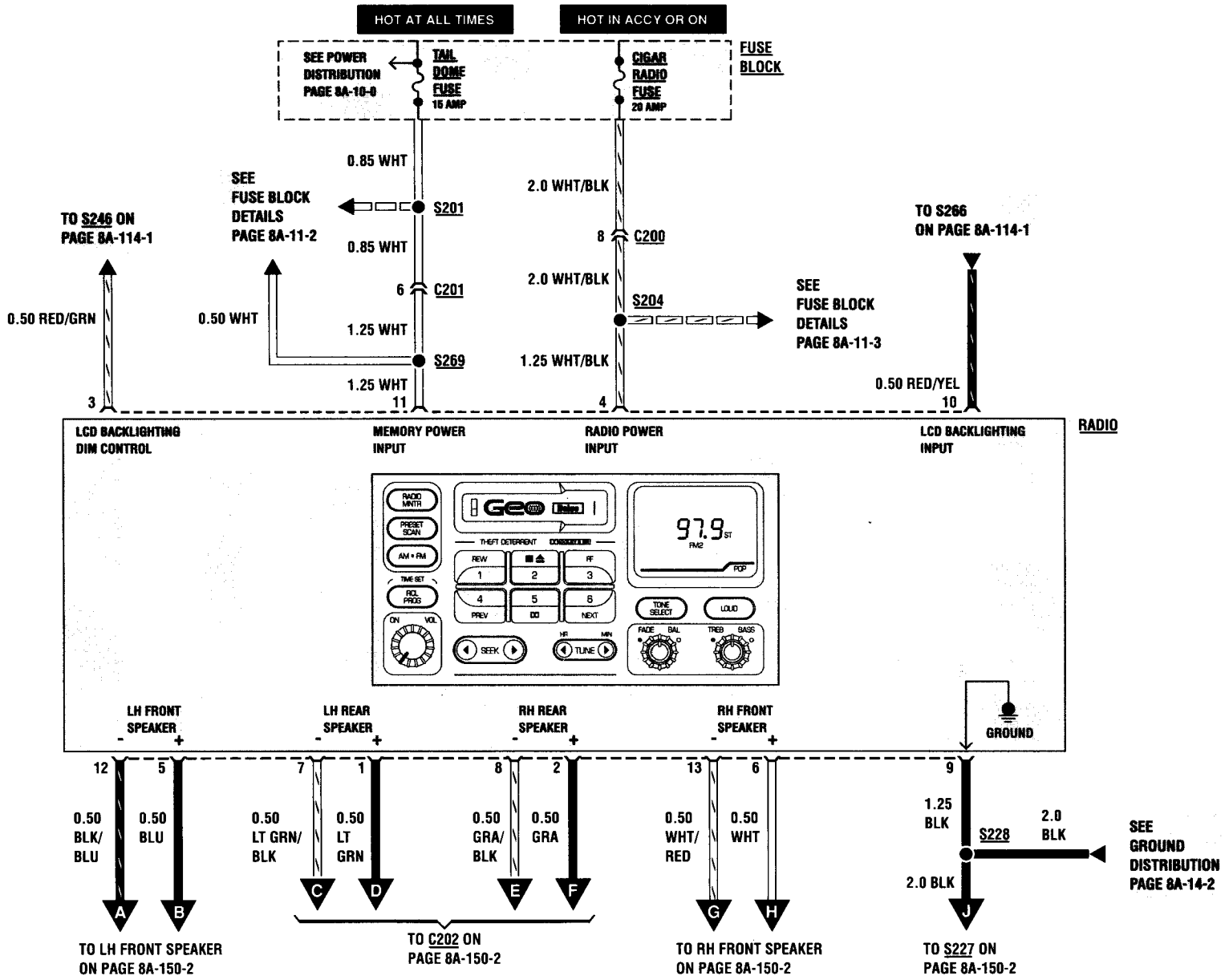

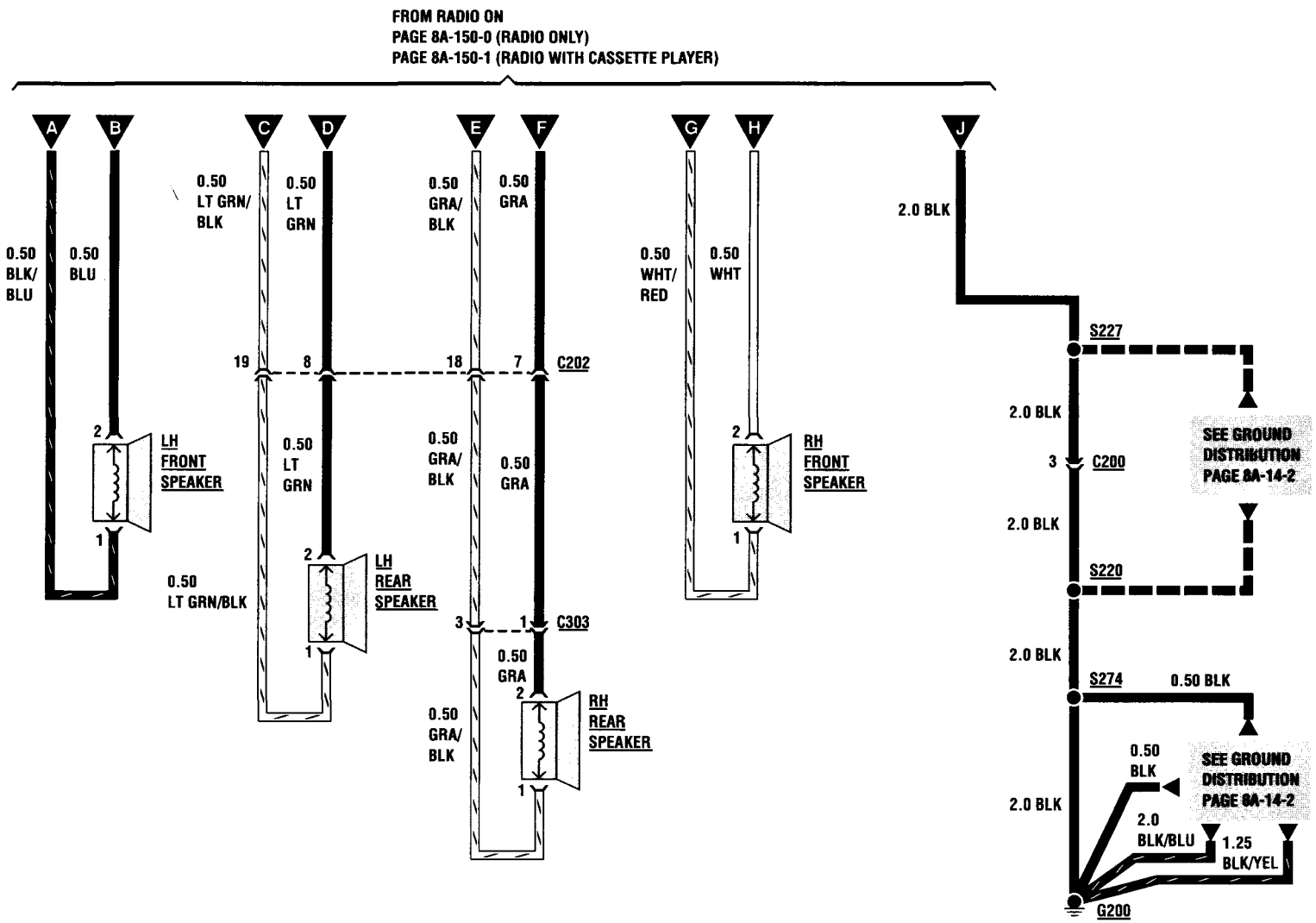
FROM RADIO ON
PAGE 8A-150-0 (RADIO ONLY)
PAGE 8A-150-1 (RADIO WITH CASSETTE PLAYER)
A
B
C
D
E
F
G
H
J
0.50 BLK/BLU
0.50 BLU
0.50 LT GRN/BLK
0.50 LT GRN
0.50 GRA/BLK
0.50 GRA
0.50 WHT/RED
0.50 WHT
2.0 BLK
19
8
18
7
C202
LH FRONT SPEAKER
LH REAR SPEAKER
RH FRONT SPEAKER
RH REAR SPEAKER
0.50 LT GRN/BLK
3
1
C303
S227
C200
S220
S274
0.50 BLK
SEE GROUND DISTRIBUTION PAGE 8A-14-2
2.0 BLK/BLU
1.25 BLK/YEL
G200

RADIO/AUDIO SYSTEM

COMPONENT	LOCATION	FIGURE	CONNECTOR
Fuse Block	Under I/P left of Steering Column	201-05/A	
LH Front Speaker	Lower LH I/P	201-06/A	
LH Rear Speaker	LH Rear Passenger Compartment Trim Panel	201-07/A	
Radio	Center of I/P	201-06/A	150-15
RH Front Speaker	Lower RH I/P	201-06/A	
RH Rear Speaker	RH Rear Passenger Compartment Trim Panel	201-07/A	
C200 (22 Cavities)	I/P Harness to Main Harness, behind I/P left of Steering Column	201-05/A	202-01/A1
C201 (10 Cavities)	I/P Harness to Main Harness, behind I/P left of Steering Column	201-05/A	202-02/A1
C202 (20 Cavities)	I/P Harness to Floor Harness 1, behind I/P left of Steering Column	201-06/A	202-03/A1
C303 (4 Cavities)	Floor Harness 1 to Floor Harness 2, behind LH Rear Passenger Compartment Trim Panel	201-07/A	202-06/B3
S201	Main Harness, behind I/P left of Steering Column	201-05/A	
S204	I/P Harness, behind Center I/P near Radio	201-06/A	
S220	Main Harness, behind I/P left of Steering Column	201-05/A	
S227	I/P Harness, behind Center I/P near Radio	201-06/A	
S228	I/P Harness, behind Center I/P near Radio	201-06/A	
S269	Main Harness, behind LH I/P right of Steering Column	201-05/A	
S274	Main Harness, behind LH I/P near ECM	201-05/A	
G200	Behind LH I/P above Fuse Block	201-05/A	

TROUBLESHOOTING HINTS

1. Check CIGAR RADIO Fuse with a fuse tester.
2. Check TAIL DOME Fuse with a fuse tester.
3. Check that G200 and G201 are clean and tight.

RADIO/AUDIO SYSTEM

SYSTEM DIAGNOSIS

RADIO/AUDIO SYSTEM	DIAGNOSTIC CHART A		
	TEST	RESULT	ACTION
A1.	Turn ignition switch to "ACC." Turn RADIO ON. Press "AM-FM" selector switch to "AM." Select any AM station.	Clock registers correct time and clear sound comes from SPEAKERS.	GO TO **A2.**
		Clear sound from SPEAKERS but RADIO Face does not illuminate.	If RADIO Face does not illuminate with Light Switch in "OFF," remove RADIO for repair. Otherwise, GO TO **A8.**
		No sound from any SPEAKERS.	GO TO **A2.**
		RADIO operates but reception is poor (weak signal).	GO TO **A35.**
		RADIO operates but generates noise.	GO TO **A41.**
		RADIO operates but SPEAKER tone is poor.	GO TO **A37.**
A2.	Rotate "BAL" and "FADE" controls.	Clear sound comes from all SPEAKERS.	GO TO **A3.**
		One or more SPEAKERS do not operate.	GO TO **A14.**
		No sound from any speaker.	GO TO **A3.**
A3.	Press "AM-FM" selector switch to "FM." Select any FM station.	Clear sound comes from all SPEAKERS.	If AM operates – GO TO **A4.** If AM does not operate – GO TO **A9.**
		No sound from any SPEAKER.	If AM operates – remove RADIO for repair. If AM does not operate, GO TO **A11.**
		RADIO operates but reception is poor (weak signal).	GO TO **A35.**
		RADIO operates but generates noise.	GO TO **A41.**
		RADIO operates but SPEAKER tone is poor.	GO TO **A37.**
A4.	Turn ignition switch to "ON." Check AM and FM.	Clear sound from all speakers.	GO TO **A5.**
		RADIO generates noise.	GO TO **A52.**
A5.	Turn engine ON. Check AM and FM.	Clear sound from all speakers.	GO TO **A6.**
		RADIO generates noise.	GO TO **A55.**

RADIO/AUDIO SYSTEM

SYSTEM DIAGNOSIS

RADIO/AUDIO SYSTEM	DIAGNOSTIC CHART A (CONT'D)		
	TEST	RESULT	ACTION
A6.	Turn on all accessories. Check AM and FM.	Clear sound from all speakers.	All systems diagnosed in this cell are functioning normally. If RADIO is equipped with a Cassette Player, GO TO **A7.**
		RADIO generates noise.	GO TO **A62.**
		One or more switch pops present.	GO TO **A45.**
A7.	Insert a known good cassette tape into Cassette Player.	Cassette Player operates normally.	All systems diagnosed in this cell are functioning normally.
		Tape sounds weak or noisy.	GO TO **A39.**
		Cassette Player does not operate.	GO TO **A40.**
A8.	Turn Light Switch to PARK or HEAD.	RADIO digital display remains on.	Check for an open in RED/YEL wire between S266 and RADIO. If OK, remove RADIO for repair.
		RADIO digital display goes out.	Check for an open in RED/GRN wire between S246 and RADIO. If OK, remove RADIO for repair.
A9.	Check antenna connection. Select any AM station.	Antenna connection bad.	Repair connection.
		Antenna connection good.	GO TO **A10.**
A10.	Perform antenna test on page 8A-150-13.	Antenna fails test.	Replace defective antenna or lead-in.
		Antenna passes test.	Remove RADIO for repair.
A11.	Backprobe RADIO connector with a test lamp from cavity 4 to chassis ground.	Test lamp does not light.	Repair open in WHT/BLK wire between FUSE BLOCK and RADIO.
		Test lamp lights.	GO TO **A12.**
A12.	Backprobe RADIO connector with a test lamp from cavity 11 to ground.	Test lamp does not light.	Repair open in WHT wire between RADIO and FUSE BLOCK.
		Test lamp lights.	GO TO **A13.**
A13.	Disconnect RADIO connector. Connect a digital multimeter from RADIO connector cavity 9 to chassis ground. Measure resistance.	More than 3.0 ohms.	Repair open in BLK ground wire between RADIO and G200.
		Less than 3.0 ohms.	Remove RADIO for repair.

SYSTEM DIAGNOSIS

RADIO/AUDIO SYSTEM — DIAGNOSTIC CHART A (CONT'D)

	TEST	RESULT	ACTION
A14.	Determine which SPEAKER is noisy or not operating.	LH FRONT SPEAKER.	GO TO **A15.**
		RH FRONT SPEAKER.	GO TO **A20.**
		LH REAR SPEAKER.	GO TO **A25.**
		RH REAR SPEAKER.	GO TO **A30.**
A15.	Disconnect RADIO connector. Disconnect LH FRONT SPEAKER connector. Connect a digital multimeter from RADIO connector cavity 5 to chassis ground. Measure resistance.	Less than infinite.	Repair short to ground in BLU wire between RADIO and LH FRONT SPEAKER.
		Infinite.	GO TO **A16.**
A16.	Connect a digital multimeter from RADIO connector cavity 12 to chassis ground. Measure resistance.	Less than infinite.	Repair short to ground in BLK/BLU wire between RADIO and LH FRONT SPEAKER.
		Infinite.	GO TO **A17.**
A17.	Connect a digital multimeter across RADIO connector cavities 5 and 12. Measure resistance.	Less than infinite.	Repair short between BLU and BLK/BLU wires.
		Infinite.	GO TO **A18.**
A18.	Connect SPEAKER connector. Connect a digital multimeter across RADIO connector cavities 5 and 12. Measure resistance.	Between 3 and 10 ohms.	Remove RADIO for repair.
		Less than 3 or more than 10 ohms.	GO TO **A19.**
A19.	Disconnect SPEAKER connector. Connect a digital multimeter across SPEAKER terminals. Measure resistance.	Between 3 and 10 ohms.	Repair open in BLU wire or BLK/BLU wire.
		Less than 3 or more than 10 ohms.	Replace SPEAKER.
A20.	Disconnect RADIO connector. Disconnect RH FRONT SPEAKER connector. Connect a digital multimeter from RADIO connector cavity 6 to chassis ground. Measure resistance.	Less than infinite.	Repair short to ground in WHT wire between RADIO and RH FRONT SPEAKER.
		Infinite.	GO TO **A21.**
A21.	Connect a digital multimeter from RADIO connector cavity 13 to chassis ground. Measure resistance.	Less than infinite.	Repair short to ground in WHT/RED wire between RADIO and RH FRONT SPEAKER.
		Infinite.	GO TO **A22.**
A22.	Connect a digital multimeter across RADIO connector cavities 6 and 13. Measure resistance.	Less than infinite.	Repair short between WHT and WHT/RED wires.
		Infinite.	GO TO **A23.**

RADIO/AUDIO SYSTEM

SYSTEM DIAGNOSIS

RADIO/AUDIO SYSTEM — DIAGNOSTIC CHART A (CONT'D)

	TEST	RESULT	ACTION
A23.	Connect SPEAKER connector. Connect a digital multimeter across RADIO connector cavities 6 and 13. Measure resistance.	Between 3 and 10 ohms.	Remove RADIO for repair.
		Less than 3 or more than 10 ohms.	GO TO **A24.**
A24.	Disconnect SPEAKER connector. Connect a digital multimeter across SPEAKER terminals. Measure resistance.	Between 3 and 10 ohms.	Repair open in WHT wire or WHT/RED wire.
		Less than 3 or more than 10 ohms.	Replace SPEAKER.
A25.	Disconnect RADIO connector. Disconnect LH REAR SPEAKER connector. Connect a digital multimeter from RADIO connector cavity 7 to chassis ground. Measure resistance.	Less than infinite.	Repair short to ground in LT GRN/BLK wire between RADIO and LH REAR SPEAKER.
		Infinite.	GO TO **A26.**
A26.	Connect a digital multimeter from RADIO connector cavity 1 to chassis ground. Measure resistance.	Less than infinite.	Repair short to ground in LT GRN wire between RADIO and LH REAR SPEAKER.
		Infinite.	GO TO **A27.**
A27.	Connect a digital multimeter across RADIO connector cavities 1 and 7. Measure resistance.	Less than infinite.	Repair short between LT GRN and LT GRN/BLK wires.
		Infinite.	GO TO **A28.**
A28.	Connect SPEAKER connector. Connect a digital multimeter across RADIO connector cavities 1 and 7. Measure resistance.	Between 3 and 10 ohms.	Remove RADIO for repair.
		Less than 3 or more than 10 ohms.	GO TO **A29.**
A29.	Disconnect SPEAKER connector. Connect a digital multimeter across SPEAKER terminals. Measure resistance.	Between 3 and 10 ohms.	Repair open in LT GRN wire or LT GRN/BLK wire.
		Less than 3 or more than 10 ohms.	Replace SPEAKER.
A30.	Disconnect RADIO connector. Disconnect RH REAR SPEAKER connector. Connect a digital multimeter from RADIO connector cavity 2 to chassis ground. Measure resistance.	Less than infinite.	Repair short to ground in GRA wire between RADIO and RH REAR SPEAKER.
		Infinite.	GO TO **A31.**
A31.	Connect a digital multimeter from RADIO connector cavity 8 to chassis ground. Measure resistance.	Less than infinite.	Repair short to ground in GRA/BLK wire between RADIO and RH REAR SPEAKER.
		Infinite.	GO TO **A32.**

SYSTEM DIAGNOSIS

RADIO/AUDIO SYSTEM — DIAGNOSTIC CHART A (CONT'D)

	TEST	RESULT	ACTION
A32.	Connect a digital multimeter across RADIO connector cavities 2 and 8. Measure resistance.	Less than infinite.	Repair short between GRA and GRA/BLK wires.
		Infinite.	GO TO **A33.**
A33.	Connect SPEAKER connector. Connect a digital multimeter across RADIO connector cavities 2 and 8. Measure resistance.	Between 3 and 10 ohms.	Remove RADIO for repair.
		Less than 3 or more than 10 ohms.	GO TO **A34.**
A34.	Disconnect SPEAKER connector. Connect a digital multimeter across SPEAKER terminals. Measure resistance.	Between 3 and 10 ohms.	Repair open in GRA wire or GRA/BLK wire.
		Less than 3 or more than 10 ohms.	Replace SPEAKER.
A35.	Check across entire band for average signal strength.	RADIO pulls in all stations with adequate volume.	On FM band, explain to owner that dependable range of FM transmission is a radius of approximately 20 miles.
		RADIO receives only strong AM stations.	GO TO **A36.**
A36.	Perform antenna test on page 8A-150-13.	Antenna fails test.	Repair antenna or lead-in.
		Antenna passes test.	Remove RADIO for repair.
A37.	Adjust RADIO for high volume and maximum bass. Rotate "BAL" (with cassette) and "FADE" SPEAKER controls.	Poor tone at all SPEAKERS.	Remove RADIO for repair.
		Poor tone at one SPEAKER.	GO TO **A38.**
A38.	Check for SPEAKER wire against SPEAKER cone.	Wire on SPEAKER cone.	Reroute SPEAKER wire.
		Wire clear of SPEAKER cone.	Replace SPEAKER.
A39.	Inspect and clean capstan and head. Insert a known good tape.	Cassette player operates normally.	Advise owner of normal cassette player and tape maintenance requirements.
		Cassette player still weak or noisy.	Remove RADIO for repair.
A40.	Check for any obstructions behind door.	Obstruction found.	Remove obstruction.
		No obstruction found.	GO TO **A39.**
A41.	Perform antenna test on page 8A-150-13.	Antenna passes test.	GO TO **A42.**
		Antenna fails test	Replace antenna or lead-in as required.
A42.	Remove antenna cable from RADIO. Gently bump RADIO with heel of hand.	No static heard.	GO TO **A43.**
		Static heard.	Remove RADIO for repair.

RADIO/AUDIO SYSTEM

SYSTEM DIAGNOSIS

RADIO/AUDIO SYSTEM — DIAGNOSTIC CHART A (CONT'D)

	TEST	RESULT	ACTION
A43.	Rotate "BAL" (with cassette) and "FADE" controls.	Noise present at all SPEAKERS.	GO TO **A44.**
		Noise present at one SPEAKER or set of SPEAKERS.	GO TO **A14.**
A44.	Substitute a known good RADIO.	Noise still present.	GO TO **A51.**
		Noise eliminated.	Remove RADIO for repair.
A45.	Operate all accessories individually to identify switches causing a switch pop.	All switches cause switch pop.	GO TO **A46.**
		Switch identified.	Install 0.47 micro-Farrad capacitor(s) across terminals of offending switch(es). Refer to Installing Capacitors on page 8A-150-13.
A46.	Disconnect GENERATOR connector.	Noise still present.	GO TO **A47.**
		Noise stops.	Install a ground strap from engine to frame. Make sure GENERATOR ground is clean and tight. If noise is still present, replace GENERATOR.
A47.	Disconnect Ignition Coil connector and secondary wire terminal. Connect a digital multimeter from Ignition Coil terminal 1 to Ignition Coil secondary wire terminal (Ignition Coil side). Measure resistance.	Less than 10.2 K ohms or more than 14.0 K ohms.	Replace Ignition Coil.
		Between 10.2 and 14.0 K ohms.	GO TO **A48.**
A48.	Using a digital multimeter, measure resistance of secondary wires.	3000 to 6700 ohms per foot.	GO TO **A49.**
		Less than 3000 or more than 6700 ohms per foot.	Replace faulty secondary wires.
A49.	Remove distributor cap and inspect rotor and cap for cracks, deposits and defects.	No problems found.	GO TO **A50.**
		Problems found.	Replace distributor cap and/or rotor.
A50.	Replace Noise Suppressor Condenser and Noise Suppressor Filter with known good components.	Noise still present.	See Noise Diagnosis Hints on page 8A-150-12.
		Noise eliminated.	Replace defective component.
A51.	Disconnect RADIO connector. Connect a digital multimeter from RADIO connector cavity 9 to chassis ground. Measure resistance.	More than 0.3 ohms.	Install a ground strap from RADIO case to a good ground.
		Less than 0.3 ohms.	Install a 0.47 micro-Farrad capacitor from WHT/BLK wire to chassis ground.

SYSTEM DIAGNOSIS

RADIO/AUDIO SYSTEM	DIAGNOSTIC CHART A (CONT'D)	
TEST	**RESULT**	**ACTION**
A52. Remove fuses from FUSE BLOCK until noise is eliminated.	Noise eliminated.	GO TO **A53.**
	Noise still present.	See Noise Diagnosis Hints on page 8A-150-12.
A53. Refer to Cell 11 to identify components fed by offending fuse. If more than one component, disconnect each one individually until the noisy component is isolated.	Noisy component identified.	GO TO **A54.**
	Noisy component not identified.	Noise is in a wiring harness. See Noise Diagnosis Hints on page 8A-150-12.
A54. Connect a digital multimeter from the ground terminal of the component to chassis ground. Measure resistance. Refer to the appropriate cell for wiring details.	Less than 0.3 ohms.	Replace noisy module.
	More than 0.3 ohms.	For case grounded components, install a ground strap from component case to known good ground. For other components, repair ground wire or clean chassis ground as required.
A55. Check Noise Suppressor Condenser and Noise Suppressor Filter for proper type and proper installation.	Type and installation correct.	GO TO **A56.**
	Type or installation incorrect.	Repair/replace as required.
A56. Using a digital multimeter, measure resistance from RADIO case to chassis ground.	Less than 0.3 ohms.	GO TO **A57.**
	More than 0.3 ohms.	Install a ground strap from RADIO case to a known good ground.
A57. Disconnect antenna cable from RADIO.	Noise still present.	GO TO **A58.**
	Noise eliminated.	GO TO **A59.**
A58. Connect antenna cable to RADIO. Slowly move RADIO out of instrument panel while ON.	Noise reduced with RADIO away from instrument panel.	See Noise Diagnosis Hints on page 8A-150-12.
	Noise unaffected by RADIO movement.	Install a 0.47 micro-Farrad capacitor from WHT/BLK wire to chassis ground. If noise remains, GO TO **A60.**
A59. Perform antenna test on page 8A-150-13.	Antenna passes test.	GO TO **A60.**
	Antenna fails test.	Replace antenna or lead-in as necessary.
A60. Substitute a known good RADIO.	Noise still present.	GO TO **A61.**
	Noise eliminated.	Remove RADIO for repair.

RADIO/AUDIO SYSTEM

SYSTEM DIAGNOSIS

RADIO/AUDIO SYSTEM	DIAGNOSTIC CHART A (CONT'D)		
	TEST	RESULT	ACTION
A61.	Identify the specific noise being produced.	Harsh noise or whine on AM and FM, reduced with antenna disconnected.	GO TO **A62.**
		Buzz, whine or popping noise that varies with engine speed.	GO TO **A47.**
		Whine in AM that varies with engine speed or electrical load.	GO TO **A46.**
A62.	Identify the accessory causing the noise by individually turning accessories ON and OFF.	Noisy accessory identified.	GO TO **A63.**
		Noisy accessory not identified.	See Noise Diagnosis Hints on page 8A-150-12.
A63.	Connect a digital multimeter from the ground terminal of the accessory to chassis ground. Measure resistance. Refer to the appropriate cell for wiring details.	Less than 0.3 ohms.	Replace noisy accessory.
		More than 0.3 ohms.	Repair the ground wire or clean the chassis ground as necessary.

For component replacement procedures, refer to the section listed below.

COMPONENT	SECTION
Antenna and Lead-in	Section 9A
Generator	Section 6D3
Ignition Coil	Section 6D4
Noise Suppressor Condenser	Section 6D4
Noise Suppressor Filter	Section 6D4
Radio	Section 9A
Rotor and Distributor Cap	Section 6D4
Secondary Wires	Section 6D4
Speakers	Section 9A

NOISE DIAGNOSIS HINTS

When diagnosing noise in the audio system, the vehicle should be outside with the hood down and away from power lines, transmission towers, tall buildings and any other distortion/noise producing area, such as near an arc welder. The first step in diagnosing noise in the audio system is to follow the Diagnostic Chart on the preceding pages. However, if the chart did not yield a solution or if the chart referred you here, the problem is an obscure one. In many cases, the noise is due to poor connections, an interference created by multiple causes, a poor ground to a module or motorized accessory or noise in a wiring harness. One useful tool in locating this type of noise is a noise sniffer. Refer to the procedure below for proper construction of a noise sniffer and its use. Also make sure Battery terminals are clean and tight and that the Battery is fully charged. Check for ignition secondary wires routed near any wiring harness that goes to the instrument panel. The high voltage in these wires will induce a noise into harness wires if routed too closely. Also make sure that resistor-type spark plugs are being used.

USE AND CONSTRUCTION OF A NOISE SNIFFER

Two types of noise sniffers can be made. The first is made from an old piece of antenna lead-in. The second type is made from a personal type radio/cassette player. The first is ideal for checking for noise in the instrument panel while the second is better suited for locating noise in the engine compartment. For the antenna lead-in style sniffer, refer to Figure 1. The two-inch section of coaxial cable with the black coating and braided shield stripped back becomes the antenna when the sniffer is plugged into the RADIO'S antenna socket. It can then be used to find noise in and around harness wiring. Simply plug in the noise sniffer and probe around suspected areas (see Figure 2). For best results, turn the RADIO volume up and probe from several different angles. The noise will be heard on the SPEAKERS once the noise sniffer is near the wiring harness which is producing the noise.

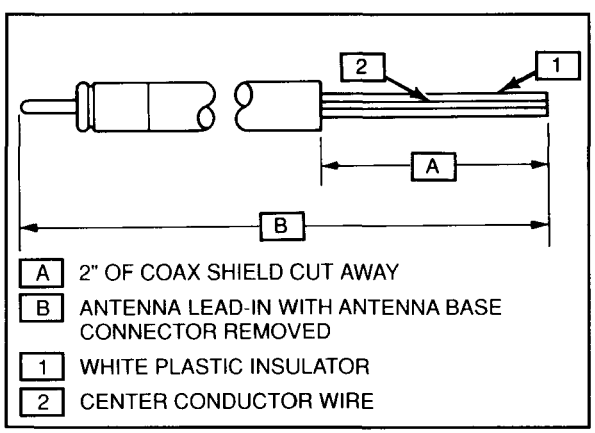

Figure 1 – Antenna Sniffer

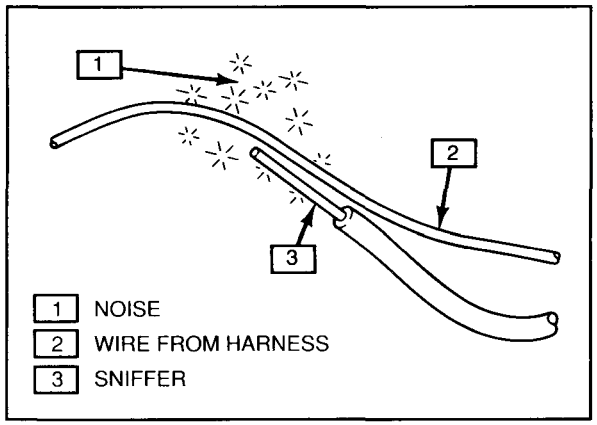

Figure 2 – Checking for Noise on a Wire

Use and Construction of a Hand Held Noise Sniffer

Equipment needed:

- Personal AM/FM radio with headphones
- Four feet of 75 ohm antenna coaxial cable
- One-half inch heat shrink tube the same diameter as the coaxial cable
- A drill and drill bit the same diameter as the coaxial cable
- Book of matches or hair dryer
- Soldering iron and solder

Assembly:

1. Strip 1/4" of insulation from each end of the coaxial cable.

2. Place the heat shrink over one end of the bare wire. Fasten the heat shrink to the wire by heating it (match or hair dryer).
3. Disassemble the radio and locate the antenna.
4. Disconnect the antenna and fasten the bare end of the coaxial cable to the antenna mount. A soldering iron may be needed.
5. Feed the coaxial cable to the exterior of the radio. Drill a feed hole if necessary.
6. Reassemble the radio.

To use the sniffer, tune the radio to an AM station. It can now be used in the same manner as the previous noise sniffer, but with the noise being heard through the headphones.

Once the problem area is isolated, wrap the harness in that area with a braided shield and attach the shield to a known good ground. If the noise persists, continue checking for other noisy wires.

ANTENNA TEST

Unplug antenna lead-in at back of RADIO and plug a test antenna into RADIO. Make sure test antenna base is grounded to the vehicle chassis. Do not touch the mast. Check RADIO reception in an area away from tall buildings, metal structures, power lines, fluorescent lighting and power tools. Tune to high and low ends of the dial on both AM and FM, checking weak and strong station reception. If reception is good and noise is eliminated, a problem exists with the original antenna and/or lead-in cable. To determine whether the antenna or the lead-in is faulty, perform the resistance check below. If the reception is still poor, the problem is not in the antenna.

Antenna Lead-In Resistance Check

Refer to Table 1 and Figure 3 for the proper location and values for antenna lead-in resistance checks. When checking resistance, cautiously wiggle the lead-in tip and cable. The readings in Table 1 should always be obtained. If not, some part of the lead-in is intermittent and should be replaced. If all readings are as shown, try the following:

1. Run a braided ground strap to the antenna lead-in.
2. Use a noise sniffer to check for noise around lead-in. Refer to "Noise Diagnosis Hints" earlier in this section.

Connect Digital Multimeter between points:	Resistance in ohms:
A and B	Less than 0.3
C and D	Less than 0.3
A and D	Infinite
B and C	Infinite
A and C	Infinite
B and D	Infinite

Table 1 – Lead-In Cable Resistance Values

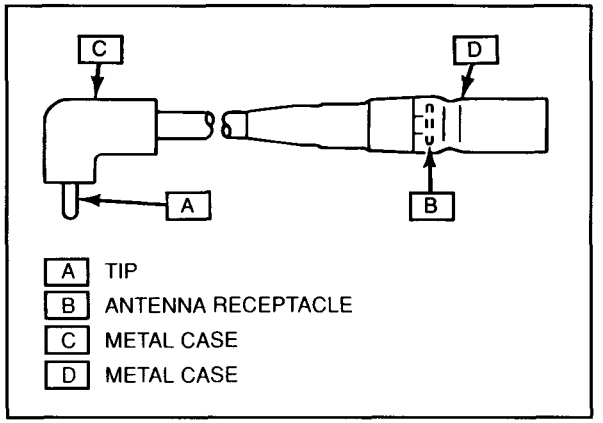

Figure 3 – Checking Lead-in Cables

INSTALLING CAPACITORS

Noise can often be filtered out of a circuit with the use of a capacitor. Since noise approximates an AC (alternating current) signal, it sees the capacitor as a resistor. The DC (direct current) signal used to power the vehicle's systems will see the capacitor as an open circuit. In this manner and with the proper selection of capacitor size, noise can be separated from the desired signal. The effective capacitance can be changed by adding capacitors in parallel and in series. When installing a capacitor in a circuit, start with one 0.47 micro-Farrad capacitor from the power circuit to ground (see Figures 4 and 5). If this does not yield the desired results, add in a second capacitor of equal value in parallel. If this still does not

eliminate all of the noise, try adding a third capacitor in series with the first. Refer to Figures 4 and 5 for an illustration of these three connections. Any further addition of capacitors to this circuit is not likely to increase the amount of noise filtered out.

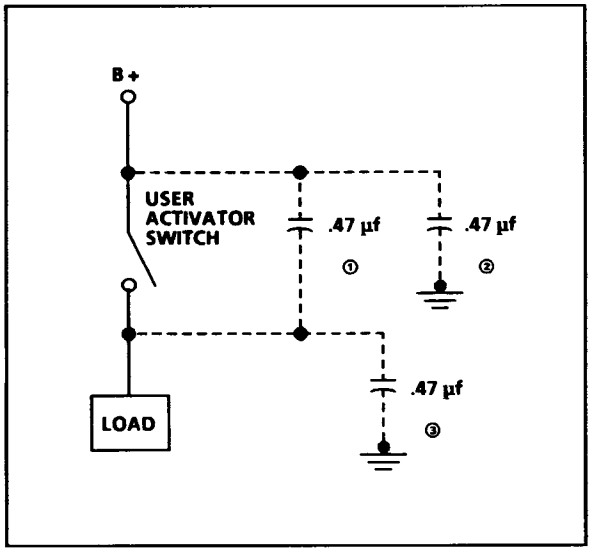

Figure 4 – Direct Switch Activated Device

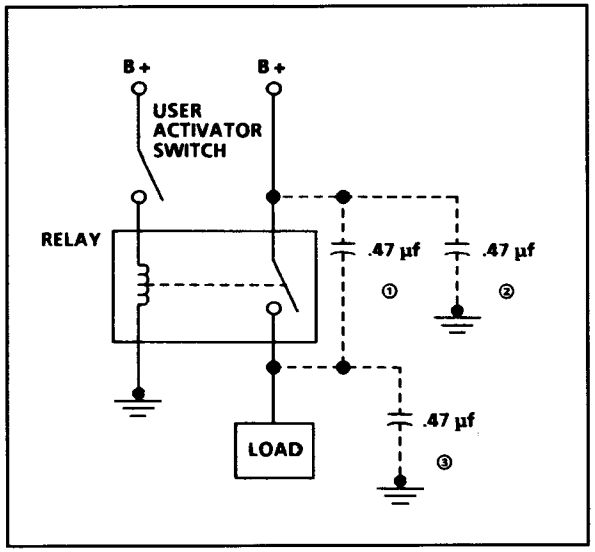

Figure 5 – Relay Activated Device

CIRCUIT OPERATION

Battery voltage is applied at all times for the RADIO clock and memory circuitry through the TAIL DOME Fuse. If this voltage source is interrupted for any reason, the clock and memory functions need to be reset.

With the ignition switch in "ACC" or "ON," Battery voltage is applied through the CIGAR RADIO Fuse to the RADIO. When the RADIO "ON/VOL" control is pressed to "ON," voltage is applied through the switch to power all electronic RADIO functions. The RADIO is permanently grounded at G200.

RADIO CONNECTOR

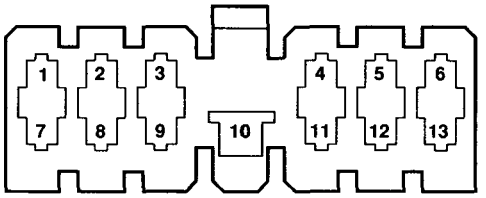

NATURAL

WIRING DETAIL LEGEND

CAVITY	WIRE COLOR	CIRCUIT
1	LT GRN	LH Rear Speaker (+)
2	GRA	RH Rear Speaker (+)
3	RED/GRN	LCD Backlighting Dim Control
4	WHT/BLK	Radio Power Input
5	BLU	LH Front Speaker (+)
6	WHT	RH Front Speaker (+)
7	LT GRN/BLK	LH Rear Speaker (–)
8	GRA/BLK	RH Rear Speaker (–)
9	BLK	Ground – G200/G201
10	RED/YEL	LCD Backlighting Input
11	WHT	Memory Power Input
12	BLK/BLU	LH Front Speaker (–)
13	WHT/RED	RH Front Speaker (–)

SERVICE PARTS INFORMATION

Component Name Used in Section 8A	Service Parts Catalog	
	Reference Name	Group
A/C Amplifier	Amplifier, Evap Stab	9.275
A/C Compressor Clutch	Clutch, A/C Cmpr	9.188
A/C Compressor Clutch Relay	Relay, A/C Cmpr	9.277
A/C Condenser Fan	Fan, A/C Cndsr	9.190
A/C Condenser Fan Relay	Relay, A/C Cmpr	9.277
A/C Fusible Link	Wire, A/C Cmpr Extn	9.276
A/C Switch	Switch, A/C Amplifier	9.275
A/C Switch Fuse	Serviced as part of Harness, A/C Evap Ampr Wrg	9.276
Audio Alarm Module	Alarm, St Belt & Ign Key	2.195
Backup Lamp Switch	Switch, B/U Lp	2.698
Blower Motor	Motor, Htr Blo	8.855
Blower Speed Selector Switch	Switch, Htr Cont Blo	8.852
Brake Fluid Level Switch	Serviced as part of Reservoir, Brk M/Cyl	4.651
Brake Fluid Pressure Differential Switch	Valve, Brk Propn	4.652
Cigar Lighter	Lighter, Cig	9.709
Clutch Pedal Position (CPP) Switch	Switch, M/Trns Clu Start	4.054
Combination Switch	Switch, Strg Col Comb	2.895
Data Link Connector (DLC)	Connector #12020043	Packard
Daytime Running Lights (DRL) Controller	Controller, Daytime Running Lp	2.485
Daytime Running Lights (DRL) Resistor	Resistor, Daytime Running Lp	2.485
Dome Lamp Diode	Serviced as part of Harness Asm, Body Si Wrg	2.480
Distributor	Distributor, Ign	2.361
Dual Pressure Switch	Valve, A/C Refrig High Press Serv	9.220
Duty Check Data Link Connector (DLC)	Serviced as part of Harness, Fwd Lp Wrg	2.480
Electronic Brake Control Module (EBCM)	Module, Elek Brk Cont	4.720
Engine Control Module (ECM)	Controller Asm, EPI	3.300
Engine Coolant Temperature (ECT) Gage	Gage, Temp	1.148
Engine Coolant Temperature (ECT) Sending Unit	Sensor, Eng Coolant Temp	3.682
Engine Coolant Temperature (ECT) Sensor	Sensor, Manif Wat Temp	1.150
Engine Coolant Temperature (ECT) Switch	Sensor, A/C Eng Cool	9.275
Evaporative Emission Solenoid Purge Valve	Valve, Fuel Vpr Line Check (Two-Way)	3.130
Evaporator Thermistor	Thermistor, Air Conditioner Evaporator	9.275

SERVICE PARTS INFORMATION

Component Name Used in Section 8A	Service Parts Catalog	
	Reference Name	Group
Exhaust Gas Recirculation Solenoid Vacuum (EGR SV) Valve	Valve, EGR Vlv Vac Cont Chk	3.670
Exhaust Gas Recirculation (EGR) Temperature Sensor	Sensor, EGR Thermo	3.682
Four-Wheel Drive Switch	Switch Asm, Trans Case 4 Wheel Drive	4.563
Front Washer Pump	Pump, Wswa	16.065
Front Wiper Motor	Motor, Wsw	16.064
Fuel Gage	Gage, Fuel	3.108
Fuel Gage Sending Unit	Gage, Fuel (At Tank)	3.107
Fuel Injector	Injector, Throt Body	3.300
Fuel Pump	Pump, Fuel	3.900
Fuel Pump Relay	Relay, EFI	3.300
Fusible Link Box	Block, Eng Wrg Harn Junc	2.483
Generator	Generator	2.275
Heated Oxygen Sensor (HO2S)	Sensor, Exh Oxy	3.682
Heater Resistor	Resistor, Blo Mot	8.855
Horn	Horn, 350 Hz	2.810
Horn Relay	Relay, Horn	2.815
Horn Switch	Button, Horn Contact	2.819
Idle Air Control (IAC) Valve	Solenoid, Eng TBI	3.314
Igniter	Igniter, Ign Distr	2.383
Ignition Coil	Coil, Ign	2.170
Ignition Key Warning Switch	Serviced as part of Cylinder, Strg Col Lk & Ign Sw	2.188
Ignition Switch	Cylinder, Strg Col Lk & Ign Sw	2.188
Illumination Controller	Control, I/P Lp Dimr	2.490
Instrument Panel Cluster Assembly	Cluster, Inst	9.735
Instrument Panel Cluster Printed Circuit	Circuit, Inst Cstr Printed	9.744
Intake Air Temperature (IAT) Sensor	Sensor, Manif Air Temperature	3.320
LH Door Jamb Switch	Switch, Dr Jamb	16.494
LH Front Speaker	Speaker, Rdo Frt	9.650
LH Rear Speaker	Speaker, Rdo Rr	9.665
Main Relay	Relay, EFI	3.300
Malfunction Indicator Lamp (MIL) Cancel Switch (Federal)	Switch, Diagn Sel	9.755
Manifold Absolute Pressure (MAP) Sensor	Sensor, MAP	3.682

SERVICE PARTS INFORMATION

Component Name Used in Section 8A	Service Parts Catalog	
	Reference Name	Group
Noise Suppressor Condenser	Capacitor, Rdo Pwr Ant	9.654
Noise Suppressor Filter	Filter, RFI Noise Suppr	9.654
Oil Pressure Switch	Sensor, Eng Oil Press Ga	1.800
Park/Neutral Position (PNP) Switch	Switch Asm, Trans Shift	4.054
Parking Brake Switch	Switch, Park Brk Ind	4.589
Power Steering Pressure Switch	Switch, P/S Press	6.609
Pressure Limit Valve	Valve, Diff Pressure Limiting	4.730
Radio	Radio Pkg	21.480A
Rear Defogger	Serviced as part of Window, R/D	16.585
Rear Defogger Switch	Switch, R/Wdo Defg	9.778
Rear Washer Pump	Pump, Wswa	16.065
Rear Wheel Antilock (RWAL) Brake Data Link Connector (DLC)	Serviced as part of Harness, ECM Diag Conn	2.440
Rear Wheel Antilock (RWAL) Brake Relay	Relay, Elek Brk Cont	4.720
Rear Wheel Antilock (RWAL) Brake Speed Sensor	Sensor, Frt Whl Spd	4.710
Rear Wiper Motor	Motor, R/Wdo Wpr	16.480
Rear Wiper/Washer Switch	Switch, R/Wdo Wpr & Wa	16.480
RH Door Jamb Switch	Switch, Dr Jamb	16.494
RH Front Speaker	Speaker, Rdo Frt	9.650
RH Rear Speaker	Speaker, Rdo Rr	9.665
Seat Belt Switch	Serviced as part of Belt, D/Seat	16.714
Shift Lock Diode	Diode, Wrg Harn (Main)	2.510
Shift Lock Relay	Relay, A/Trns Shft Lk Cont Sol Lp Ind	4.053
Shift Lock Solenoid	Solenoid, A/Trns Back Drive	4.011
Speedometer (without Tachometer)	Speedometer	9.761
Speedometer (with Tachometer)	Speedometer, w/Tach	9.761
Starter Motor	Motor, Strtr	2.041
Starter Solenoid	Switch, Strtr Sol	2.100
Stoplamp Switch (Automatic Transmission)	Switch, S/Lp (Lock Up)	2.447
Stoplamp Switch (Manual Transmission)	Switch, S/Lp	2.447
Tachometer	Speedometer, W/Tach	9.761
Throttle Opener Solenoid Vacuum (TOSV) Valve	Serviced as part of Valve, EGR Vlv Vac Cont Chk	3.670
Throttle Position (TP) Sensor	Sensor, TBI Throt Posn	3.764

SERVICE PARTS INFORMATION

Component Name Used in Section 8A	Service Parts Catalog	
	Reference Name	Group
Torque Converter Clutch (TCC) Relay	Relay, A/Trans Shft Lk Cont Sol	4.053
Torque Converter Clutch (TCC) Solenoid	Solenoid, Trans	4.122
Turn/Hazard Relay	Relay, Hazard Lp & Cor Lp	2.575
Vehicle Speed Sensor (VSS)	Serviced as part of Speedometer	9.761

COMPONENT LOCATION VIEWS

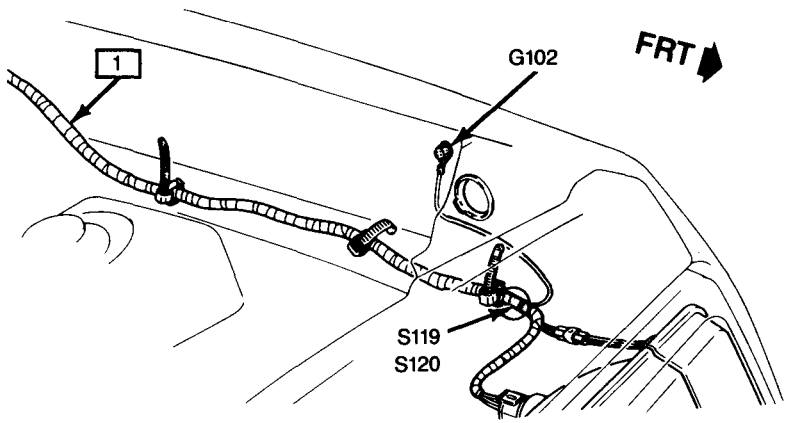

1 MAIN HARNESS

Figure A – LH Front Engine Compartment

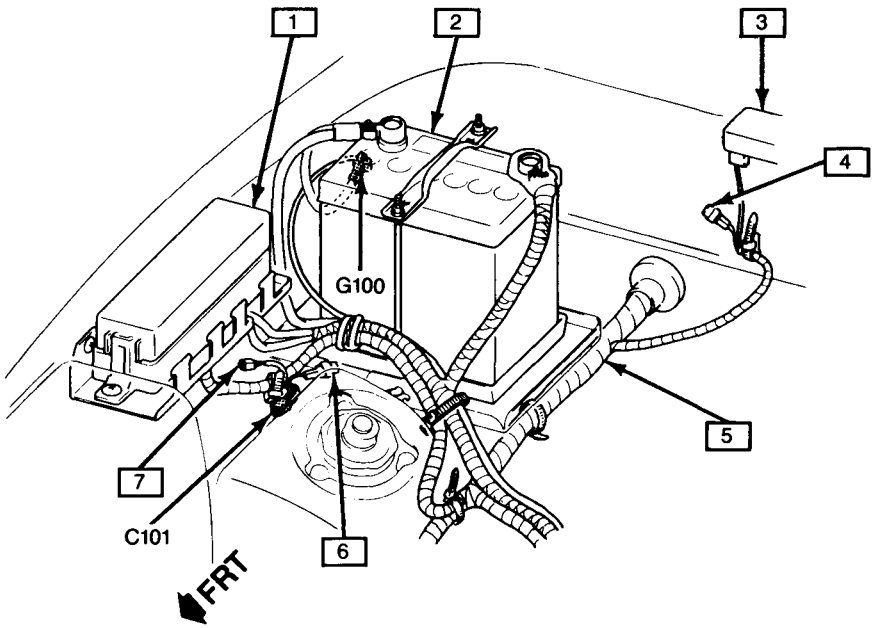

1 FUSIBLE LINK BOX
2 BATTERY
3 MANIFOLD ABSOLUTE PRESSURE (MAP) SENSOR
4 EXHAUST GAS RECIRCULATION TEMPERATURE (EGRT) SENSOR CONNECTOR (CALIFORNIA)
5 MAIN HARNESS
6 DUTY CHECK DATA LINK CONNECTOR (DLC)
7 TORQUE CONVERTER CLUTCH (TCC) RELAY CONNECTOR (AUTOMATIC TRANSMISSION)

Figure B – RH Rear Engine Compartment

COMPONENT LOCATION VIEWS

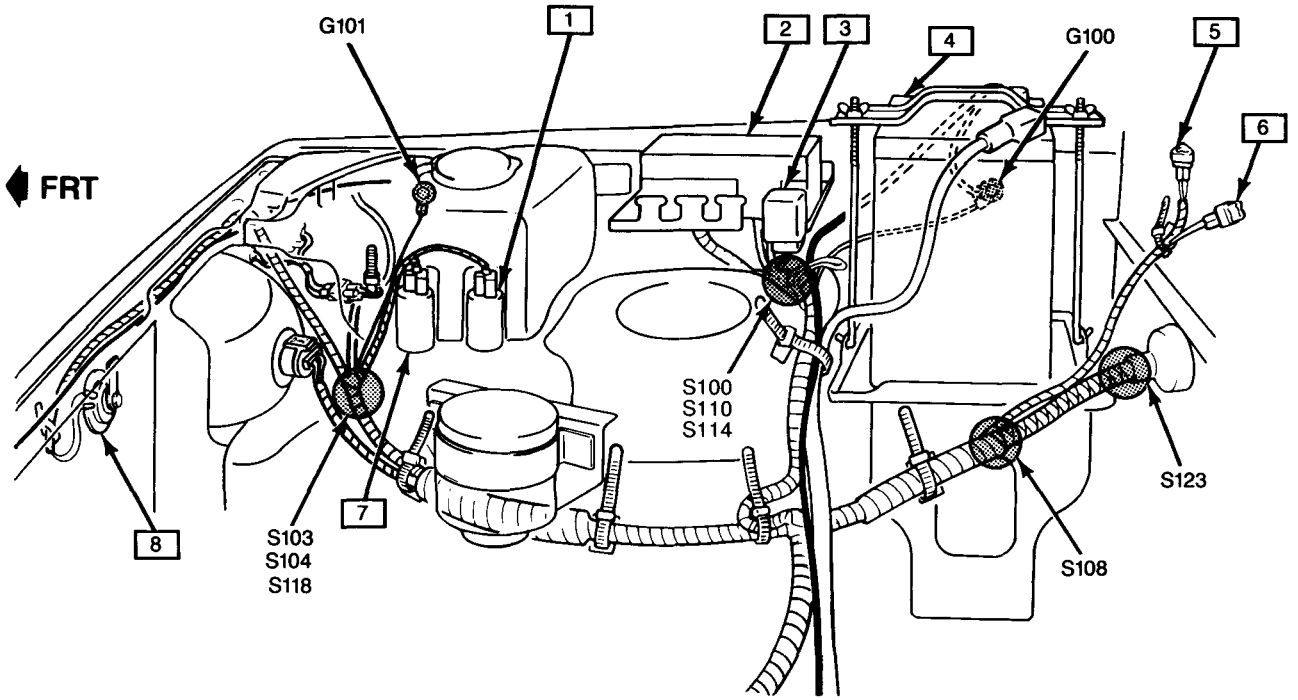

1 FRONT WASHER PUMP
2 FUSIBLE LINK BOX
3 TORQUE CONVERTER CLUTCH (TCC) RELAY (AUTOMATIC TRANSMISSION)
4 BATTERY
5 MANIFOLD ABSOLUTE PRESSURE (MAP) SENSOR CONNECTOR
6 EXHAUST GAS RECIRCULATION TEMPERATURE (EGRT) SENSOR CONNECTOR (CALIFORNIA)
7 REAR WASHER PUMP (HARDTOP — LSi)
8 HORN

Figure A – RH Inner Fender Wiring

COMPONENT LOCATION VIEWS

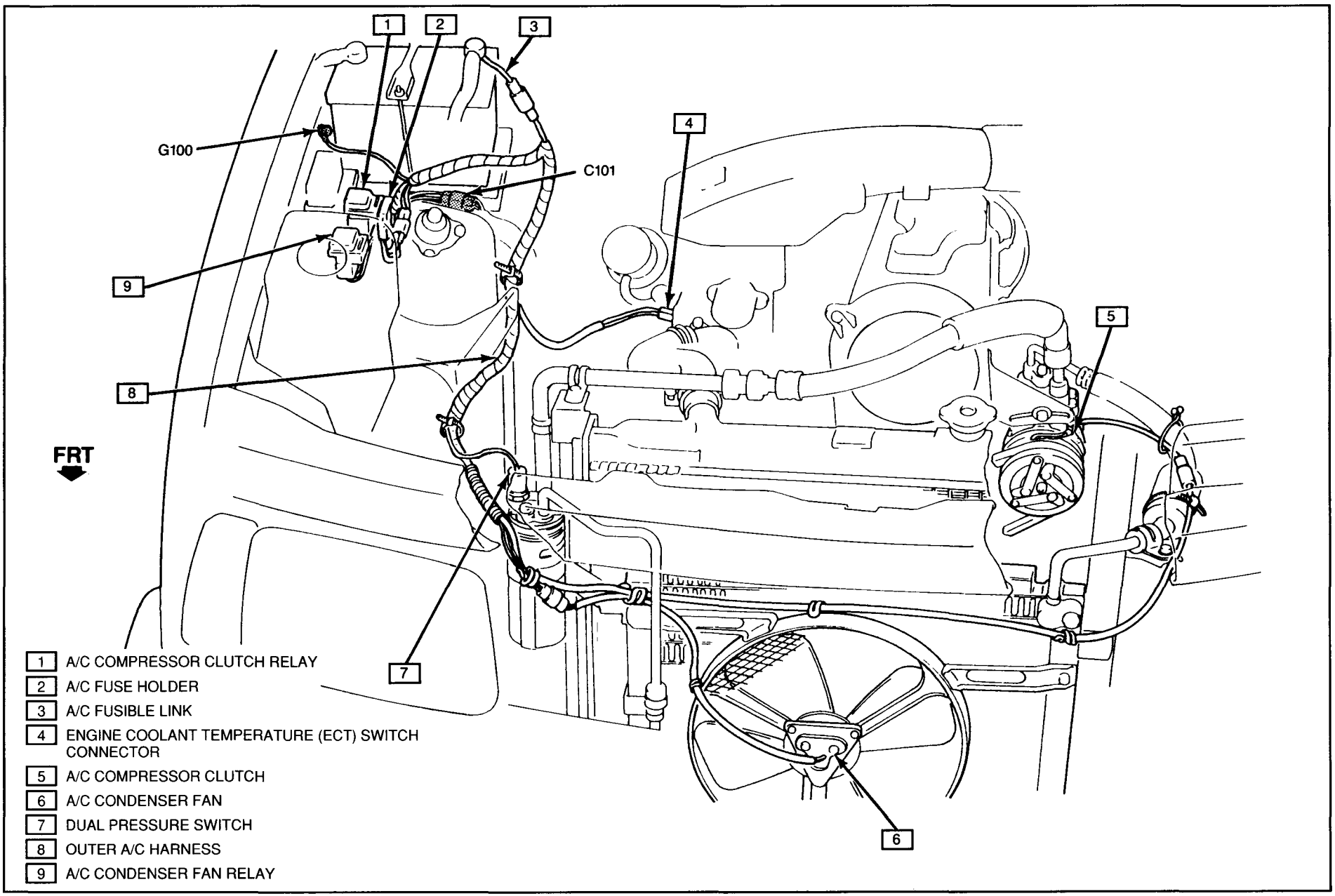

1 A/C COMPRESSOR CLUTCH RELAY
2 A/C FUSE HOLDER
3 A/C FUSIBLE LINK
4 ENGINE COOLANT TEMPERATURE (ECT) SWITCH CONNECTOR
5 A/C COMPRESSOR CLUTCH
6 A/C CONDENSER FAN
7 DUAL PRESSURE SWITCH
8 OUTER A/C HARNESS
9 A/C CONDENSER FAN RELAY

Figure A – Outer A/C Wiring

COMPONENT LOCATION VIEWS

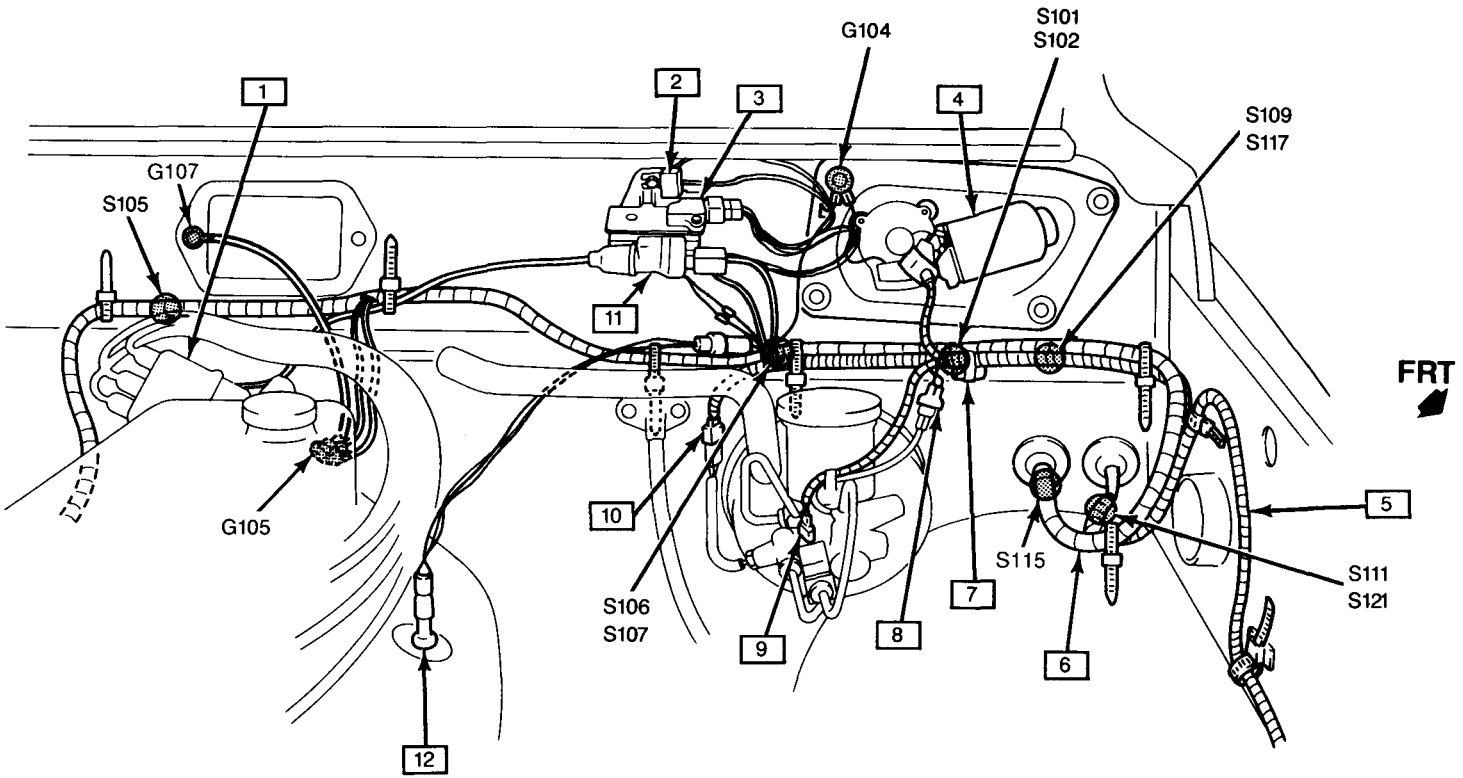

1 DISTRIBUTOR
2 NOISE SUPPRESSOR CONDENSER
3 IGNITER
4 FRONT WIPER MOTOR
5 MAIN HARNESS
6 ENGINE HARNESS
7 NOISE SUPPRESSOR FILTER
8 BRAKE FLUID LEVEL SWITCH CONNECTOR
9 BRAKE FLUID PRESSURE DIFFERENTIAL SWITCH CONNECTOR
10 PRESSURE LIMIT VALVE CONNECTOR
11 IGNITION COIL
12 HEATED OXYGEN SENSOR (HO2S)

Figure A – LH Rear Engine Compartment

COMPONENT LOCATION VIEWS

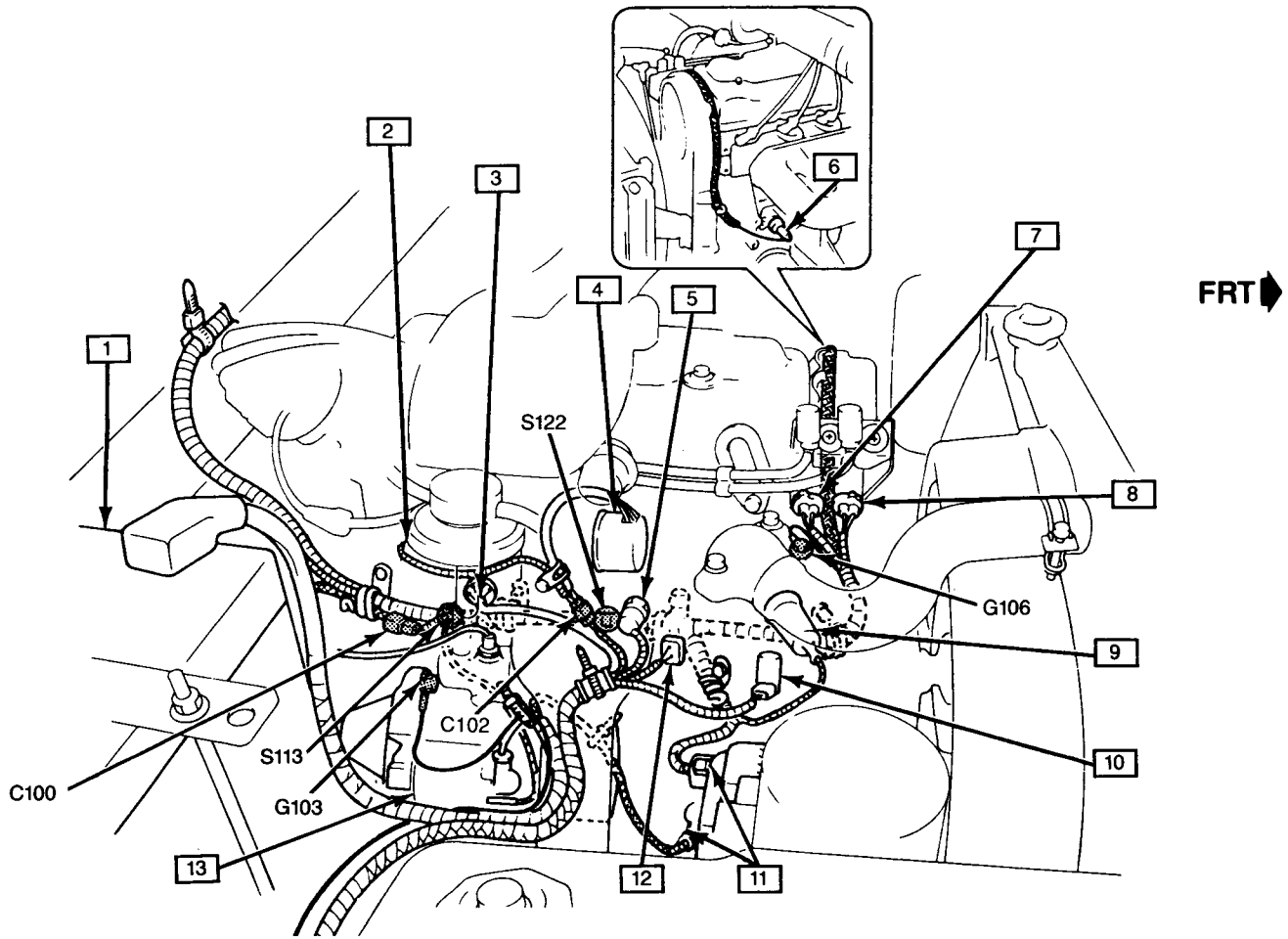

1 BATTERY
2 TO FUEL INJECTOR
3 IDLE AIR CONTROL (IAC) VALVE
4 THROTTLE POSITION (TP) SENSOR
5 INTAKE AIR TEMPERATURE (IAT) SENSOR
6 OIL PRESSURE SWITCH
7 EXHAUST GAS RECIRCULATION SOLENOID VACUUM (EGR SV) VALVE
8 THROTTLE OPENER SOLENOID VACUUM (TO SV) VALVE
9 ENGINE COOLANT TEMPERATURE (ECT) SENDING UNIT
10 EVAPORATIVE EMISSION SOLENOID PURGE VALVE
11 GENERATOR CONNECTORS
12 ENGINE COOLANT TEMPERATURE (ECT) SENSOR
13 STARTER SOLENOID

Figure A – Engine Wiring

COMPONENT LOCATION VIEWS

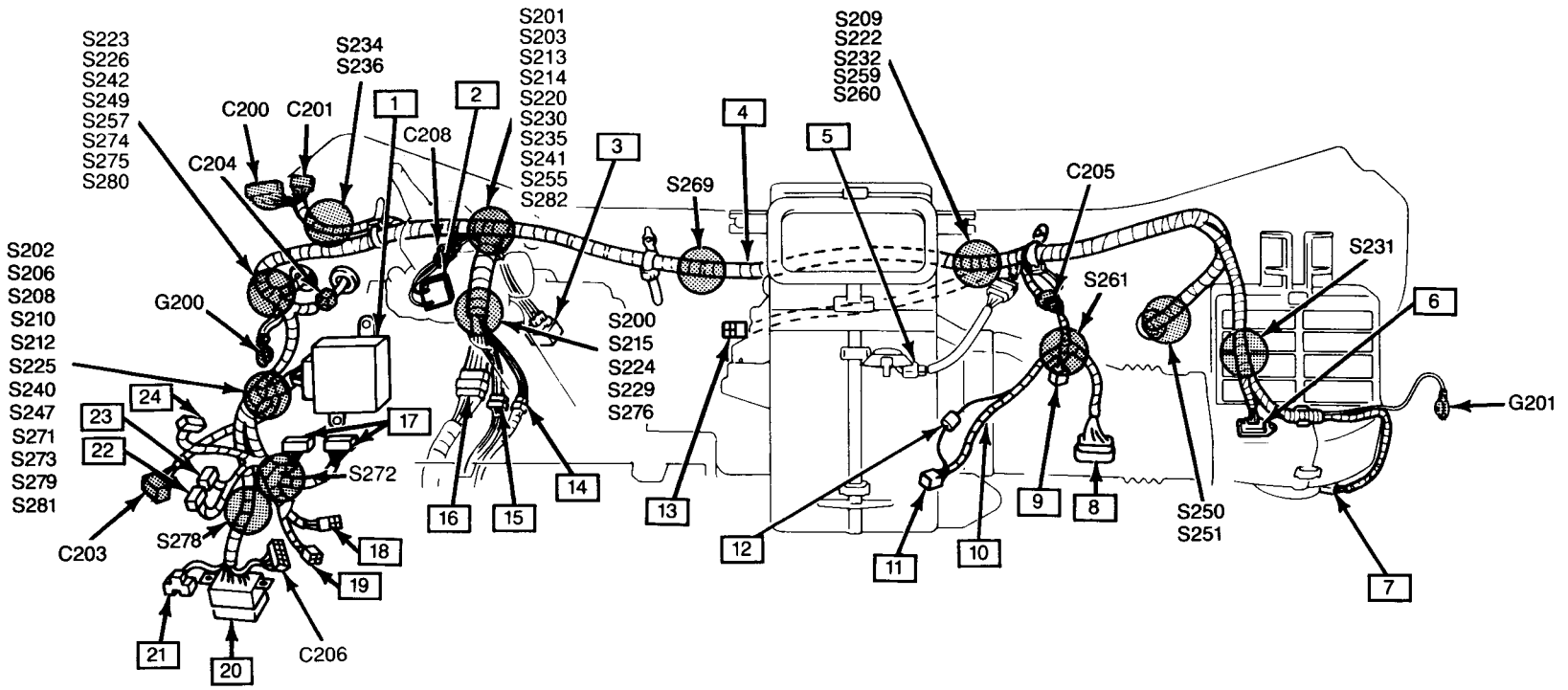

1 ELECTRONIC BRAKE CONTROL MODULE (EBCM)
2 CLUTCH PEDAL POSITION (CPP) SWITCH (MANUAL TRANSMISSION)
3 STOPLAMP SWITCH CONNECTOR
4 MAIN HARNESS
5 BLOWER SPEED SELECTOR SWITCH CONNECTOR
6 BLOWER MOTOR RESISTOR CONNECTOR
7 BLOWER MOTOR
8 A/C AMPLIFIER CONNECTOR
9 EVAPORATOR THERMISTOR
10 INNER A/C HARNESS
11 A/C SWITCH CONNECTOR
12 A/C SWITCH FUSE
13 SHIFT LOCK RELAY CONNECTOR
14 IGNITION KEY WARNING SWITCH CONNECTOR
15 IGNITION SWITCH CONNECTOR
16 COMBINATION SWITCH CONNECTOR
17 ENGINE CONTROL MODULE (ECM) CONNECTORS C1 AND C2
18 HORN RELAY CONNECTOR
19 REAR WHEEL ANTILOCK (RWAL) BRAKE RELAY CONNECTOR
20 FUSE BLOCK
21 TURN/HAZARD RELAY CONNECTOR
22 FUEL PUMP RELAY CONNECTOR
23 MAIN RELAY CONNECTOR
24 DAYTIME RUNNING LIGHTS (DRL) CONTROLLER CONNECTOR (CANADA)

Figure A – Cowl Upper Wiring

COMPONENT LOCATION VIEWS

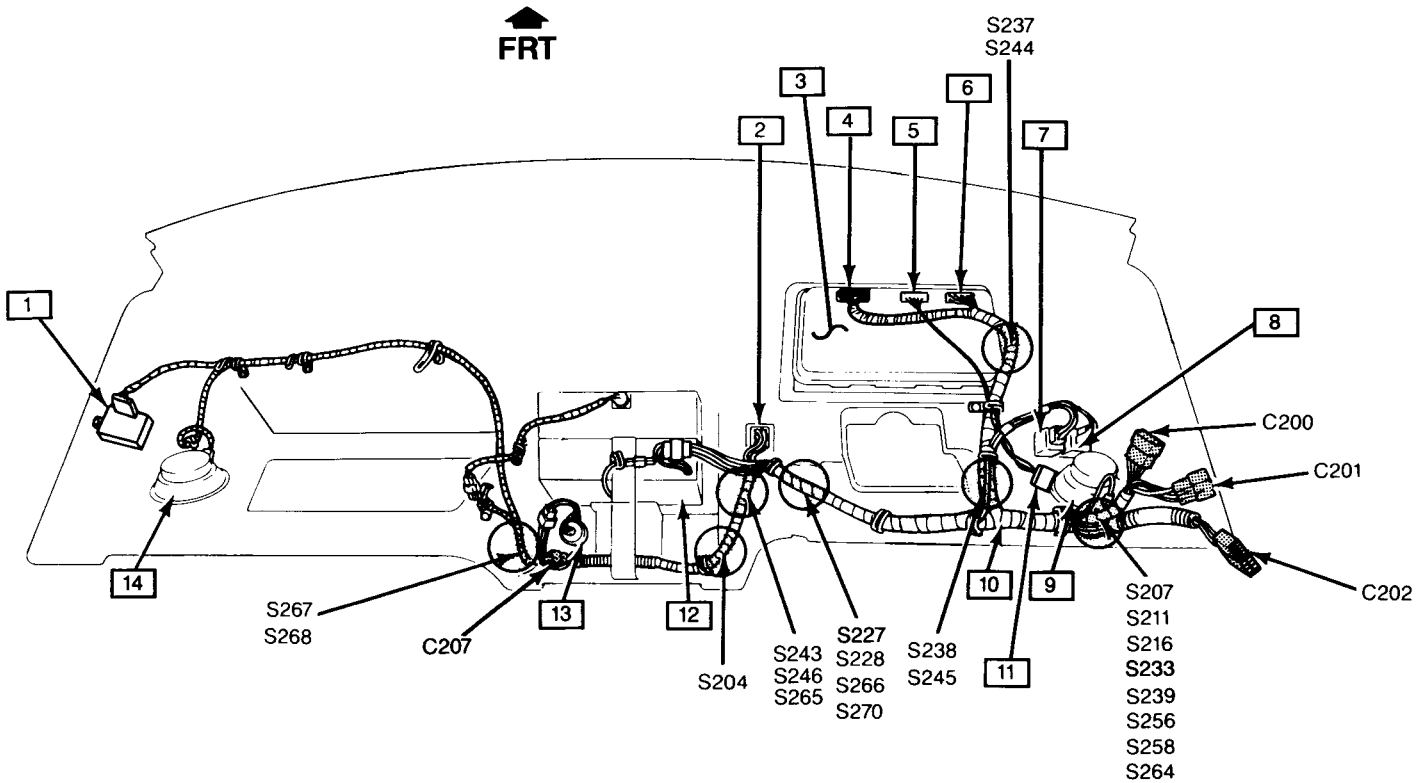

1	AUDIO ALARM MODULE
2	REAR WIPER/WASHER SWITCH (HARDTOP — LSi)
3	INSTRUMENT PANEL CLUSTER ASSEMBLY
4	INSTRUMENT PANEL CLUSTER CONNECTOR C2
5	INSTRUMENT PANEL CLUSTER CONNECTOR C3 (FEDERAL)
6	INSTRUMENT PANEL CLUSTER CONNECTOR C1
7	REAR DEFOGGER SWITCH (HARDTOP)
8	ILLUMINATION CONTROLLER
9	LH FRONT SPEAKER
10	INSTRUMENT PANEL HARNESS
11	MALFUNCTION INDICATOR LAMP (MIL) CANCEL SWITCH (FEDERAL)
12	RADIO
13	CIGAR LIGHTER
14	RH FRONT SPEAKER

Figure A – Instrument Panel Wiring

COMPONENT LOCATION VIEWS

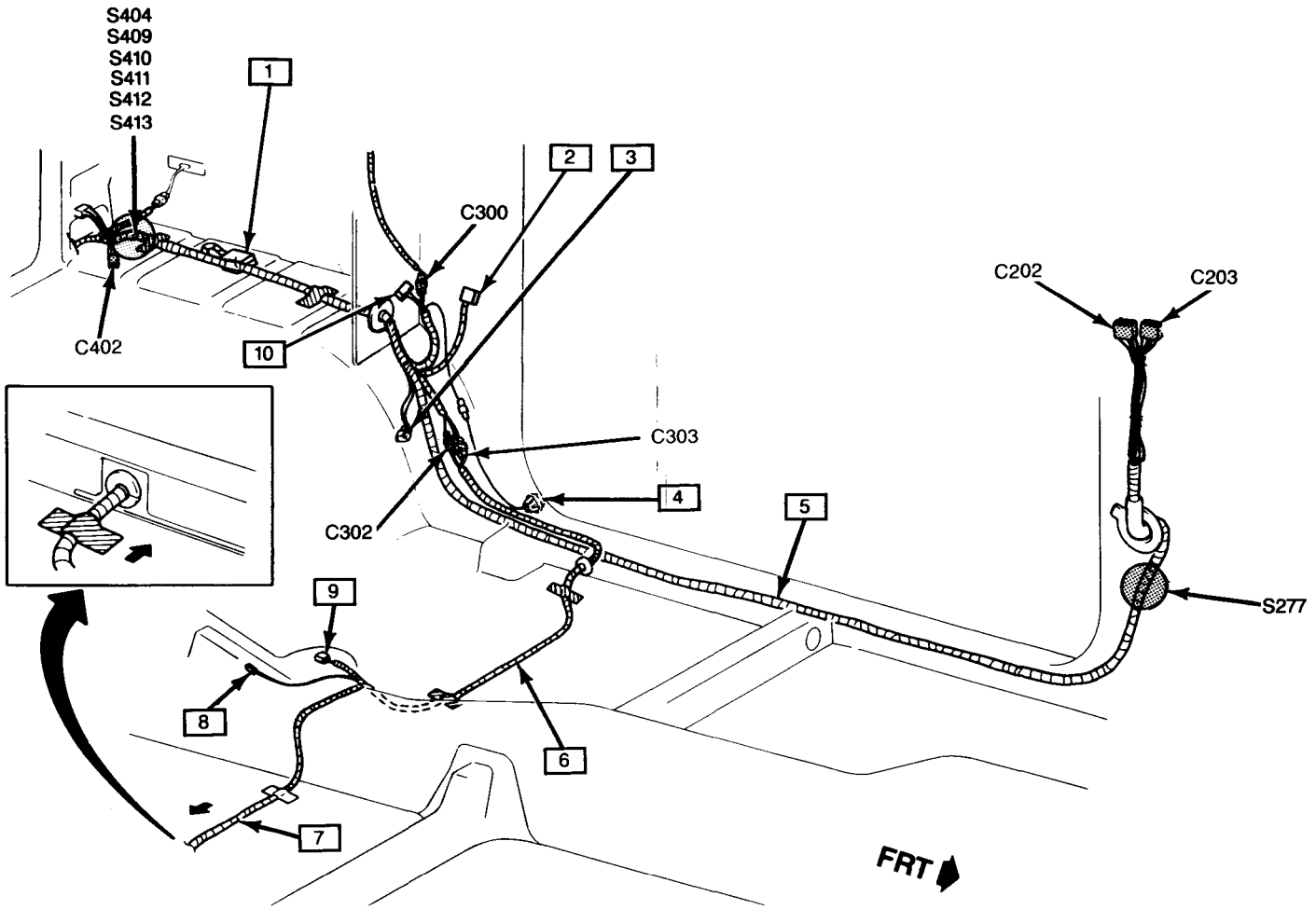

1	BELT RELAY CONNECTOR (NOT USED)	6	FLOOR HARNESS 2
2	LH BELT SOLENOID CONNECTOR (NOT USED)	7	TO RH REAR SPEAKER AND RH DOOR JAMB SWITCH
3	LH REAR SPEAKER CONNECTOR	8	PARKING BRAKE SWITCH CONNECTOR
4	LH DOOR JAMB SWITCH	9	SEAT BELT SWITCH CONNECTOR
5	FLOOR HARNESS 1	10	DOME LAMP DIODE

Figure A – Floor Wiring

COMPONENT LOCATION VIEWS

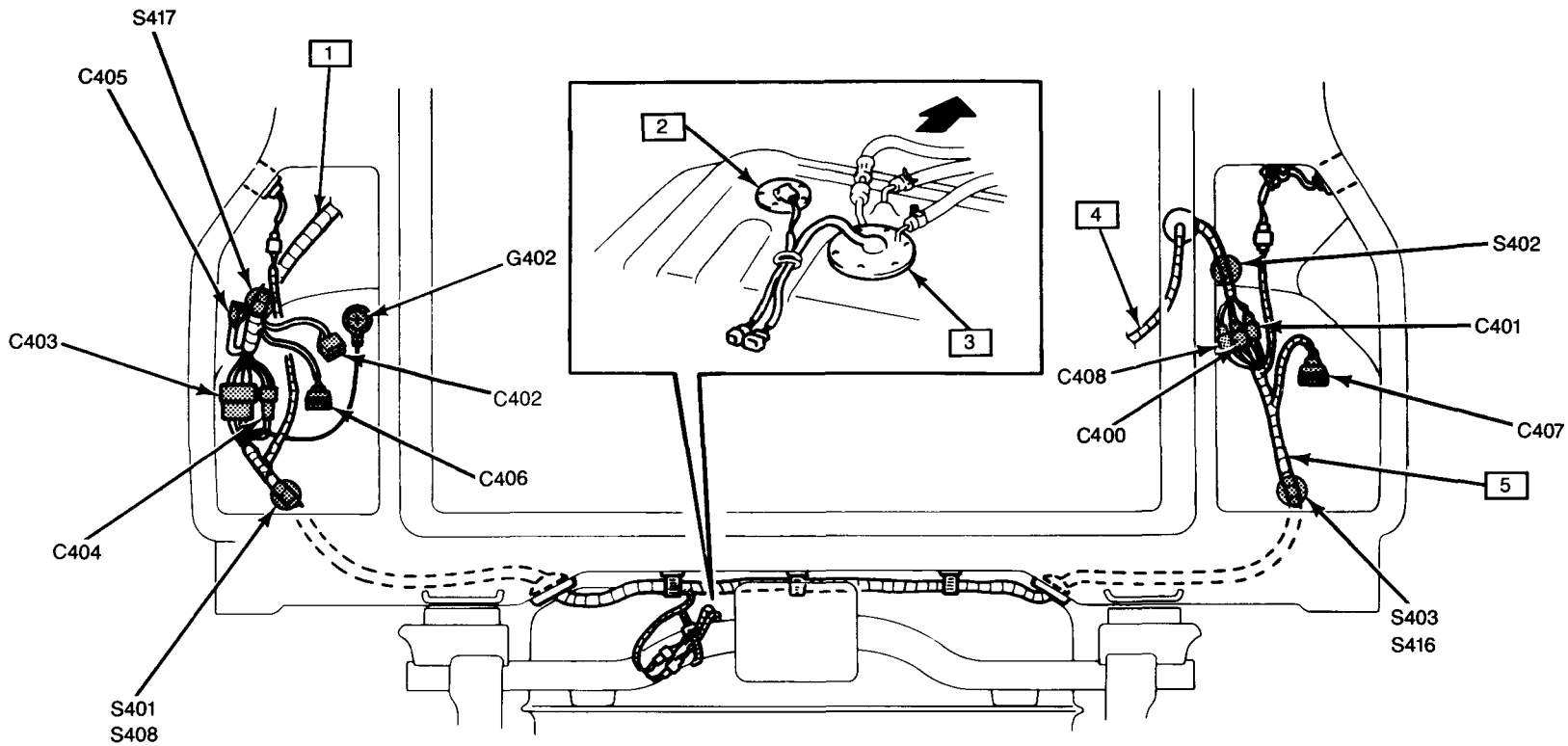

1 FLOOR HARNESS
2 FUEL GAGE SENDING UNIT
3 FUEL PUMP
4 BACK DOOR HARNESS
5 REAR LAMP HARNESS

Figure A – Rear Wiring

COMPONENT LOCATION VIEWS

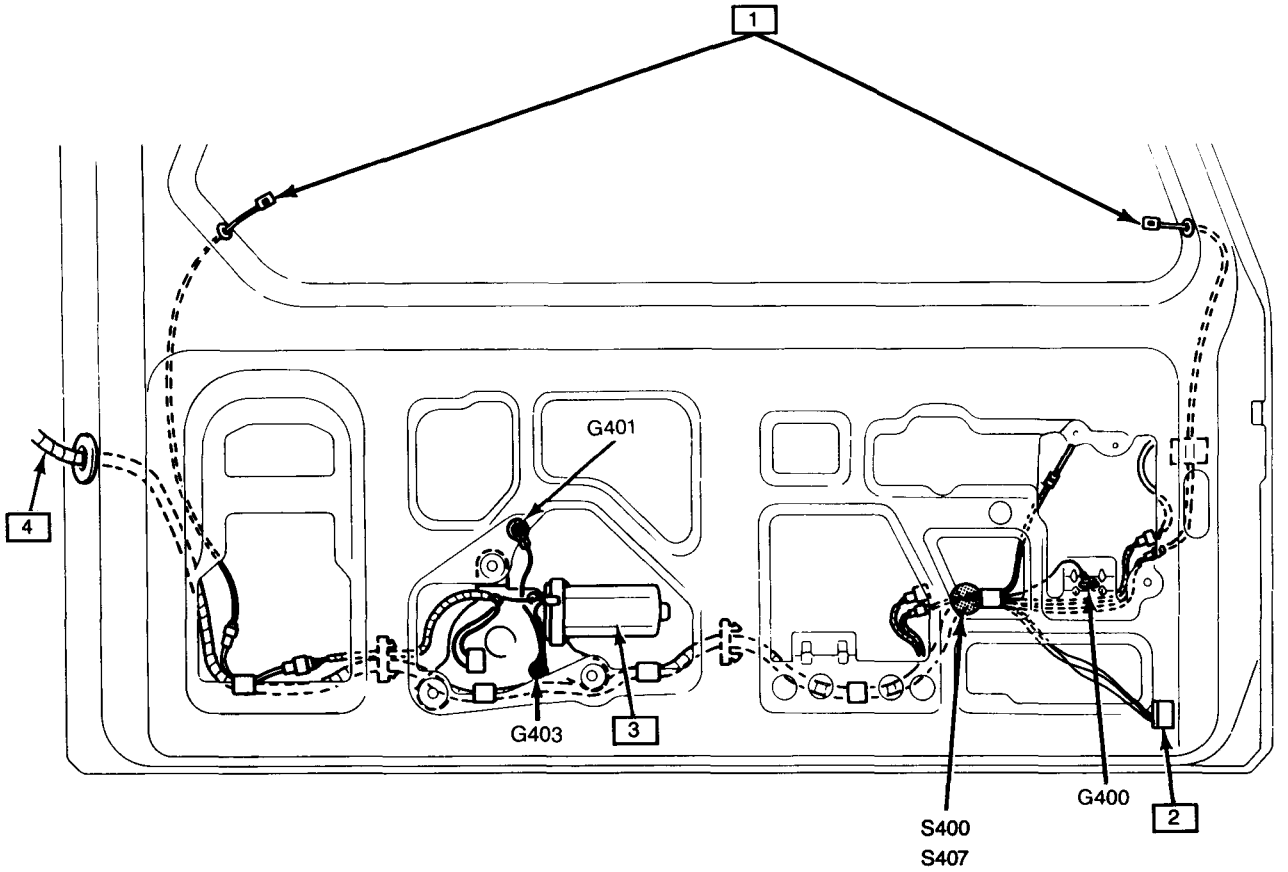

1 REAR DEFOGGER CONNECTORS
2 DOOR LOCK CONNECTOR (NOT USED)
3 REAR WIPER MOTOR (LSi)
4 BACK DOOR HARNESS

Figure A – Back Door Wiring – Hardtop

COMPONENT LOCATION VIEWS

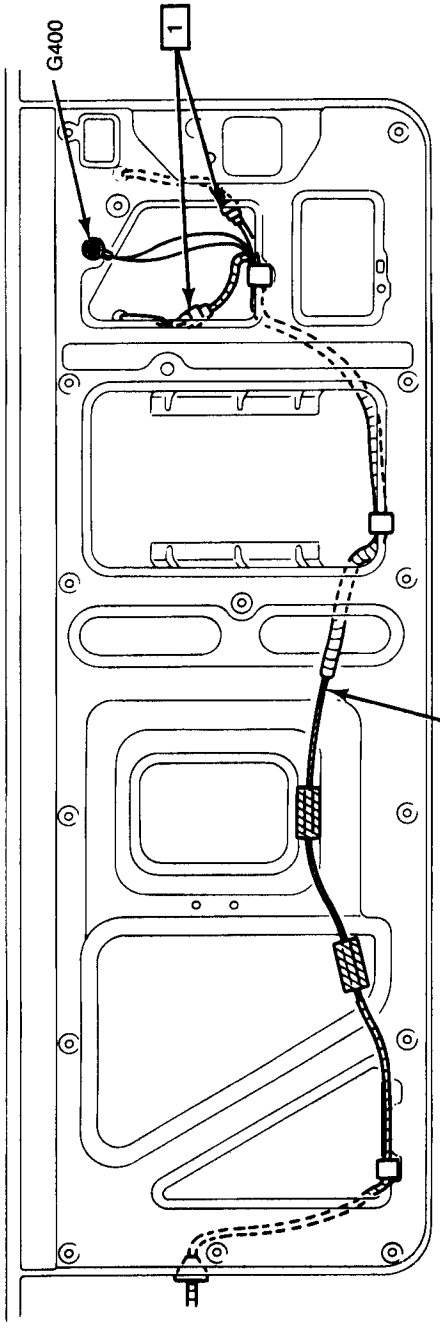

1 LICENSE PLATE LAMP CONNECTORS
2 BACK DOOR HARNESS

Figure A – Back Door Wiring – Convertible

COMPONENT LOCATION VIEWS

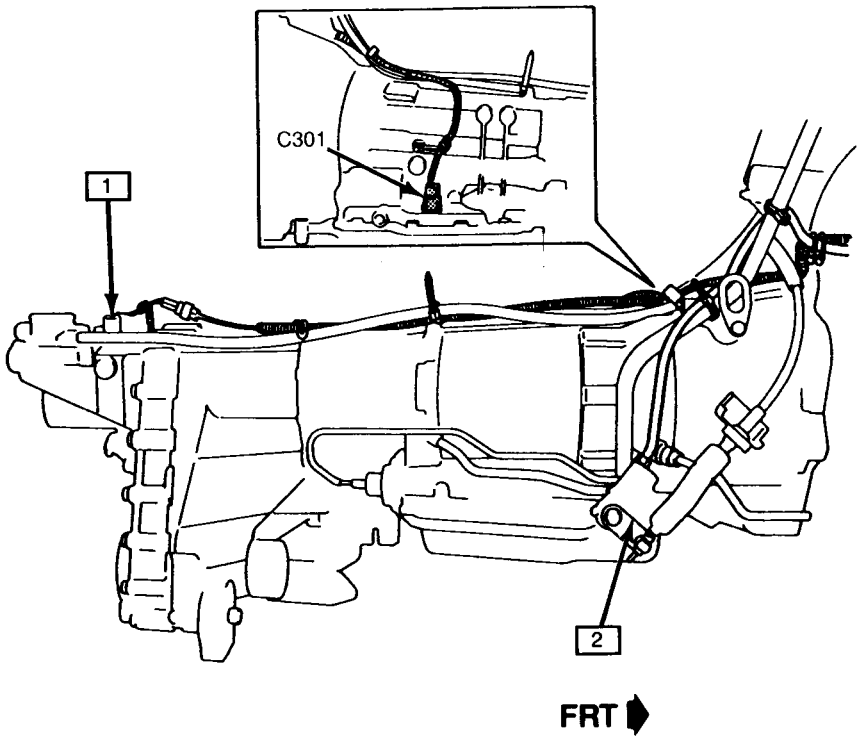

1 FOUR WHEEL DRIVE SWITCH
2 PARK/NEUTRAL POSITION (PNP) SWITCH

Figure A – Automatic Transmission Wiring

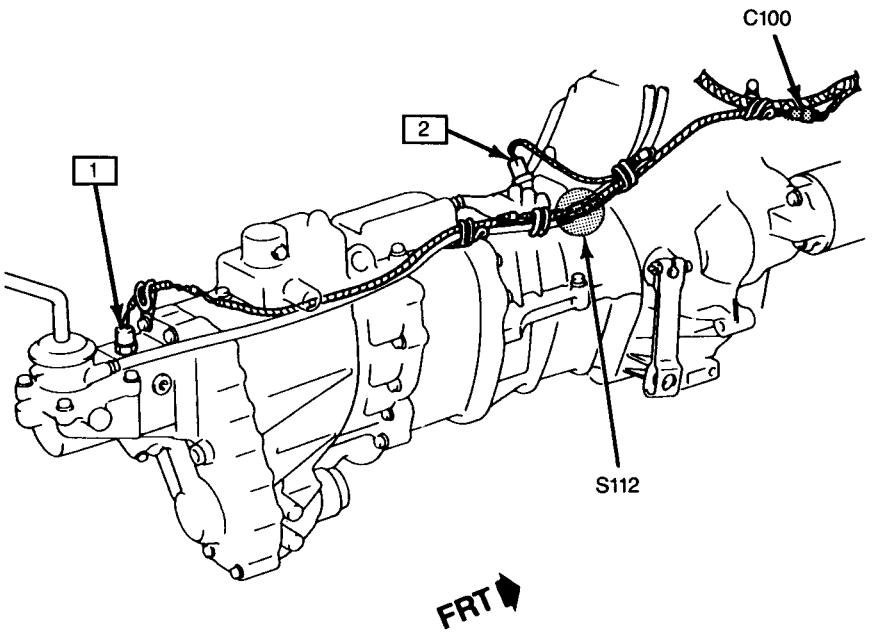

1 FOUR WHEEL DRIVE SWITCH
2 BACKUP LAMP SWITCH

Figure B – Manual Transmission Wiring

COMPONENT LOCATION VIEWS

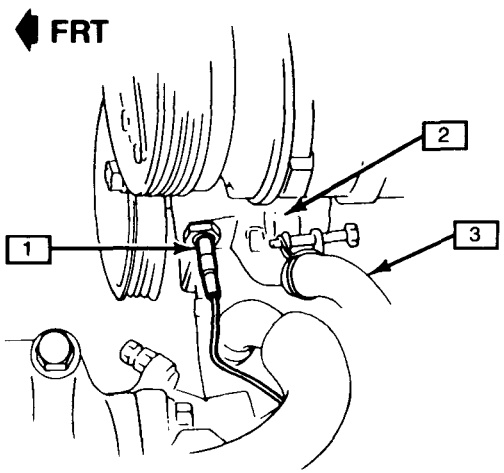

1 POWER STEERING PRESSURE SWITCH
2 POWER STEERING PUMP
3 SUCTION HOSE

Figure A – Lower LH Engine Compartment

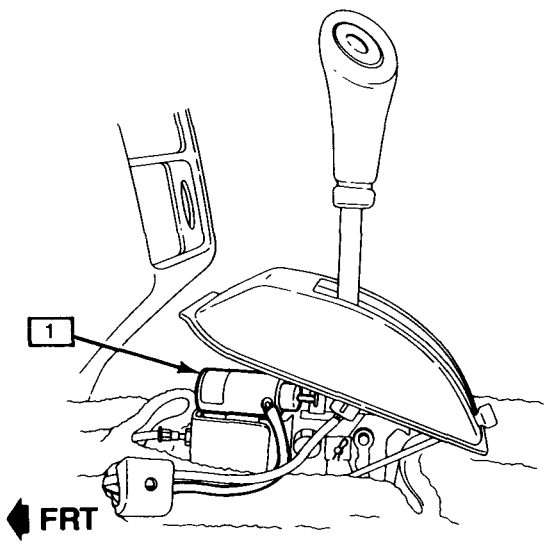

1 SHIFT LOCK SOLENOID

Figure B – Manual Selector

COMPONENT LOCATION VIEWS

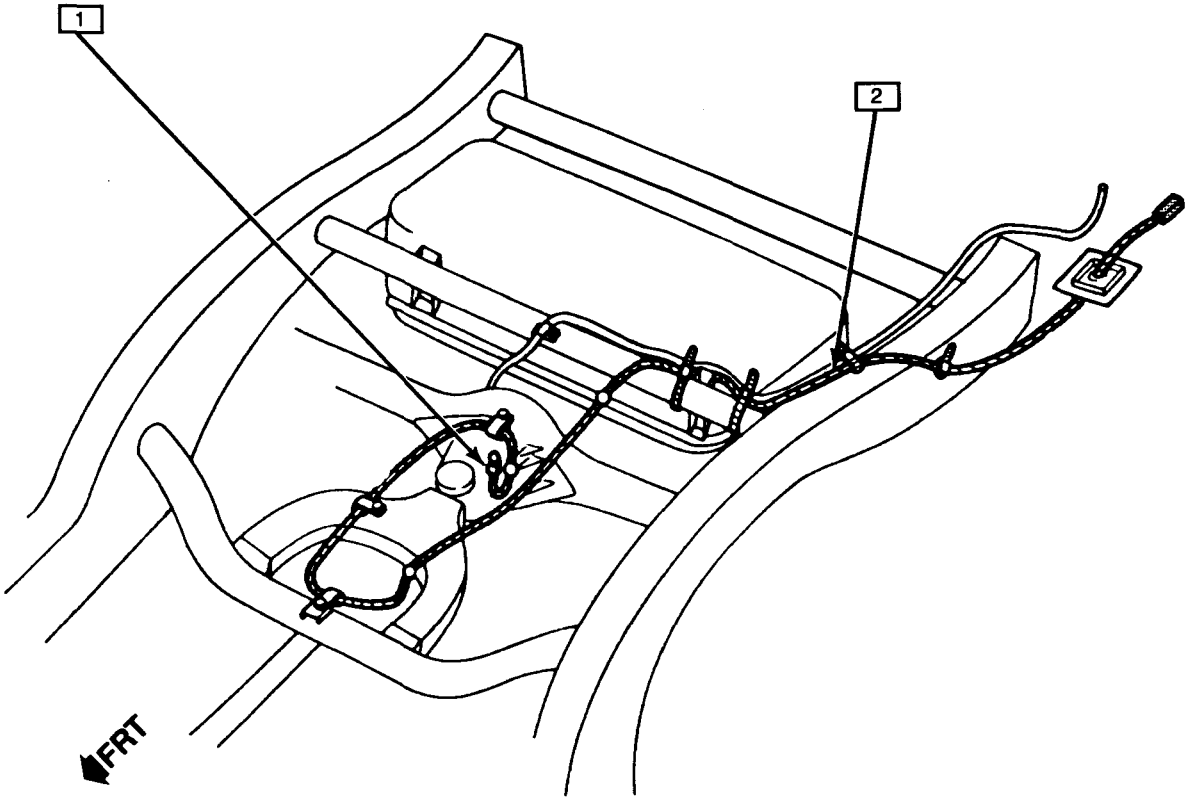

1 REAR WHEEL ANTILOCK (RWAL) BRAKE SPEED SENSOR

2 RWAL BRAKE SPEED SENSOR HARNESS

Figure A – Rear Axle Wiring

HARNESS CONNECTOR FACES

A1: COMBINATION SWITCH

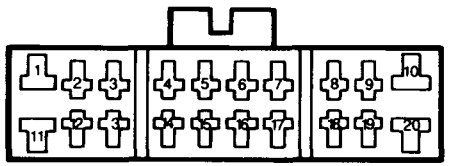

NATURAL

WIRING DETAIL LEGEND

CAVITY	WIRE COLOR	CIRCUIT
1	RED	Dimmer Switch (High-Beam)
2	GRN/RED	Turn Signal Switch (LH)
3	YEL/WHT	Turn Signal and Hazard Switch
4	BLU/GRN	Horn/Brush Slip Ring
5	BLU	Wiper/Washer Switch (LO)
6	BLU/RED	Wiper/Washer Switch (HI)
7	BLU/WHT	Wiper/Washer Switch (PARK)
8	RED/YEL	Light Switch (PARK)
9	—	Not Used (USA)
	BRN/YEL	Daytime Running Lights (DRL) Controller (Canada)
10	WHT	Light Switch (PARK)
11	RED/WHT	Dimmer Switch (Low-Beam)
12	GRN/YEL	Turn Signal Switch (RH)
13	GRN	Turn Signal and Hazard Switch
14	—	Not Used
15	—	Not Used
16	BLU/BLK	Wiper/Washer Switch (WASH)
17	YEL/BLU	Wiper/Washer Switch
18	WHT/GRN	Hazard Switch
19	YEL	Hazard Switch
20	BLK	Light Switch (Ground)

HARNESS CONNECTOR FACES

A1: C200

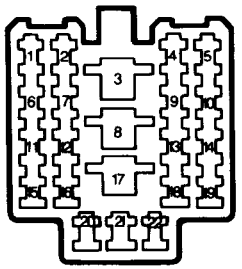

WHITE

WIRING DETAIL LEGEND

CAVITY	WIRE COLOR	CIRCUIT
1	YEL/BLK	Oil Pressure Switch
2	PPL/YEL	Malfunction Indicator Lamp (MIL)
3	BLK	Grounds – G200/G201
4	RED	High-Beam Indicator
5	—	Not Used
6	BLU/BLK	Ignition Key Warning Switch
7	YEL/WHT	Engine Coolant Temperature (ECT) Gage
8	WHT/BLK	Cigar Radio Fuse
9	BLK/YEL	Fuel Gage
10	—	Not Used
11	ORN/BLK	Four Wheel Drive Indicator

WIRING DETAIL LEGEND

CAVITY	WIRE COLOR	CIRCUIT
12	YEL/BLU	Wiper Washer Fuse
13	WHT/BLU	High-Beam Indicator
14	—	Not Used
15	ORN/WHT	Daytime Running Lights (DRL) Indicator (Canada)
16	BLK/GRN	Rear Washer Pump
17	YEL/GRN	Rear Defogger Switch
18	WHT/RED	Charge Indicator
19	—	Not Used
20	—	Not Used
21	—	Not Used
22	YEL	Vehicle Speed Sensor (VSS)

HARNESS CONNECTOR FACES

A1: C201

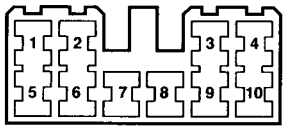

NATURAL

WIRING DETAIL LEGEND

CAVITY	WIRE COLOR	CIRCUIT
1	GRN/RED	LH Turn Signal
2	GRN/YEL	RH Turn Signal
3	RED/YEL	Light Switch
4	—	Not Used (Manual Transmission)
	BLU/RED	Brake Transmission Shift Interlock (Automatic Transmission)
5	RED/BLK	Brake Indicator
6	WHT	Tail Dome Fuse
7	PPL/RED	Ignition Switch (Bulb Test)
8	BRN	Tachometer
9	BLK/WHT	IG-Coil Meter Fuse
10	—	Not Used (Manual Transmission)
	BLU/GRN	Brake Transmission Shift Interlock (Automatic Transmission)

A2: C205

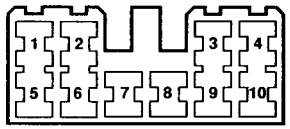

NATURAL

WIRING DETAIL LEGEND

CAVITY	WIRE COLOR	CIRCUIT
1	BLU/RED	A/C Condenser Fan Relay
2	BLK	Grounds – G200/G201
3	LT GRN	Heater Fuse
4	—	Not Used
5	PNK	A/C Compressor Clutch Relay
6	YEL/BLU	Engine Coolant Temperature (ECT) Switch
7	PNK/BLK	Blower Speed Selector Switch
8	BLK/YEL	Starter Motor
9	YEL/BLK	Engine Control Module (ECM)
10	—	Not Used

HARNESS CONNECTOR FACES

A1: C202

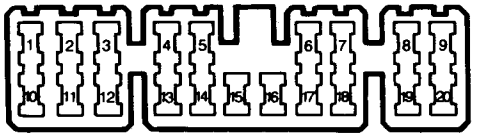

BLUE

WIRING DETAIL LEGEND

CAVITY	WIRE COLOR	CIRCUIT
1	—	Not Used
2	—	Not Used
3	—	Not Used (Hardtop – Base, Convertible)
	YEL/BLU	Wiper Washer Fuse/Rear Wiper (Hardtop – LSi)
4	GRN/RED	LH Turn Signal
5	GRN/YEL	RH Turn Signal
6	RED/YEL	Light Switch
7	GRA	Radio/RH Rear Speaker
8	LT GRN	Radio/LH Rear Speaker
9	—	Not Used
10	—	Not Used
11	—	Not Used (Hardtop – Base, Convertible)
	ORN	Rear Wiper (Hardtop – LSi)

WIRING DETAIL LEGEND

CAVITY	WIRE COLOR	CIRCUIT
12	—	Not Used (Hardtop – Base, Convertible)
	BLU/GRN	Rear Wiper (Hardtop – LSi)
13	YEL/RED	Fuel Gage Sending Unit/Fuel Gage
14	WHT	Tail Dome Fuse/Dome Lamp/Radio
15	RED/WHT	Rear Defogger
16	BLK/BLU	LH Door Jamb Switch
17	GRA/RED	Seat Belt Switch
18	GRA/BLK	Radio/RH Rear Speaker
19	LT GRN/BLK	Radio/LH Rear Speaker
20	—	Not Used

HARNESS CONNECTOR FACES

A1: C204

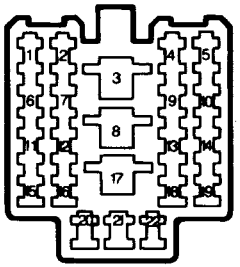

NATURAL

WIRING DETAIL LEGEND

CAVITY	WIRE COLOR	CIRCUIT
1	BLK/GRN	Grounds – G105/G106
2	YEL/BLK	Oil Pressure Switch
3	BLK/YEL	Starter Motor
4	LT GRN/WHT	Throttle Opener Solenoid Vacuum (TO SV) Valve
5	—	Not Used (2WD – Base)
	ORN/BLK	Four Wheel Drive Switch (4WD – Base, LSi)
6	RED	Backup Lamp Switch (Manual Transmission)
		Park/Neutral Position Switch (Automatic Transmission)
7	YEL/WHT	Engine Coolant Temperature (ECT) Sending Unit
8	BLK/WHT	Generator
9	LT GRN/YEL	EGR SV Valve
10	—	Not Used (2WD – Base)
	ORN/WHT	Not Used (4WD – Base, LSi)
11	YEL	Backup Lamp Switch (Manual Transmission)
		Park/Neutral Position Switch (Automatic Transmission)

WIRING DETAIL LEGEND

CAVITY	WIRE COLOR	CIRCUIT
12	WHT/RED	Generator
13	LT GRN/RED	FI Fuse
14	—	Not Used (2WD – Base)
	LT BLU	Not Used (4WD – Manual Transmission)
		Torque Converter Clutch (TCC) Solenoid (Automatic Transmission)
15	—	Not Used (Manual Transmission)
	WHT	Torque Converter Clutch (TCC) Solenoid (Automatic Transmission)
16	—	Not Used
17	—	Not Used (Manual Transmission)
	BLK/RED	Park/Neutral Position Switch (Automatic Transmission)
18	—	Not Used (Manual Transmission)
	BLU/RED	Park/Neutral Position Switch (Automatic Transmission)
19	—	Not Used
20	BLK/GRN	Distributor (Ground) G105
21	WHT	Distributor
22	BLK/GRN	Ground – G106

HARNESS CONNECTOR FACES

A1: C206

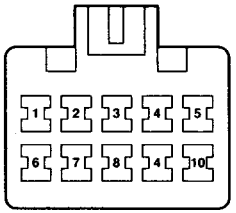

NATURAL

WIRING DETAIL LEGEND

CAVITY	WIRE COLOR	CIRCUIT
1	—	Not Used
2	BLU/YEL	Engine Control Module (ECM) Diagnostic Switch Signal
3	PPL/RED	Rear Wheel Antilock (RWAL) Brake Diagnostic Switch Signal
4	—	Not Used
5	BLK	Grounds – G200/G201
6	PPL/GRN	Engine Control Module (ECM) Serial Data Line
7	WHT/BLK	Rear Wheel Antilock (RWAL) Brake Speed Sensor
8	ORN	Rear Wheel Antilock (RWAL) Brake Speed Sensor
9	WHT	Tail Dome Fuse
10	—	Not Used

A2: C403

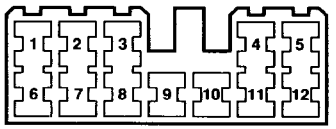

NATURAL

WIRING DETAIL LEGEND

CAVITY	WIRE COLOR	CIRCUIT
1	—	Not Used
2	—	Not Used
3	GRN/YEL	RH Rear Turn Signal Lamp
4	RED/YEL	Rear Combination Lamps
5	RED	RH Rear Backup Lamp
6	—	Not Used
7	BLK	Ground – G402
8	YEL/RED	Fuel Gage Sending Unit
9	RED/WHT	Not Used (Convertible) Rear Defogger (Hardtop)
10	PNK/BLK	Fuel Pump
11	—	Not Used
12	GRN/WHT	RH Stoplamp

HARNESS CONNECTOR FACES

A1

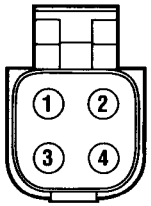

BLUE

B1

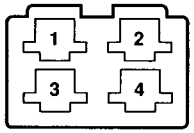

BLACK

C1

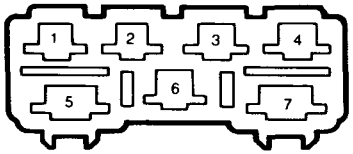

NATURAL

A2

NATURAL

B2

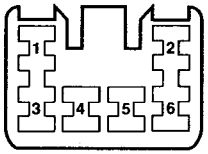

NATURAL

C2

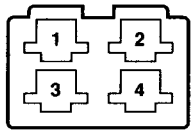

GREEN

A3

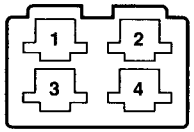

YELLOW

B3

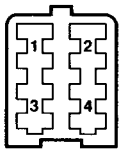

NATURAL

C3

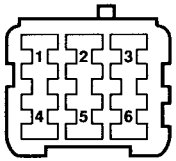

YELLOW

HARNESS CONNECTOR FACES

A1

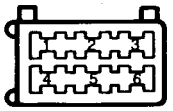

BLUE

B1

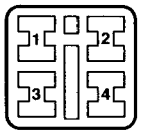

NATURAL

C1

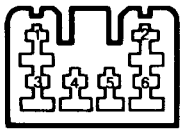

NATURAL

A2

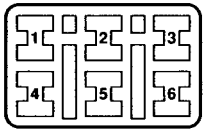

NATURAL

B2

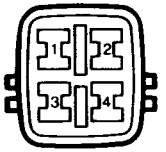

WHITE

C2

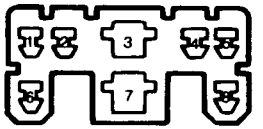

NATURAL

A3

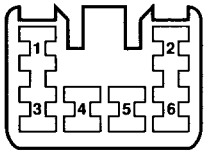

GREEN

B3

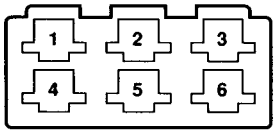

NATURAL

C3

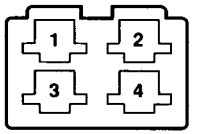

NATURAL

HARNESS CONNECTOR FACES

A1

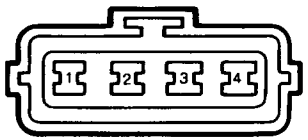

GRAY

B1

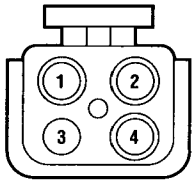

BLACK

C1

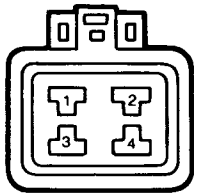

GREEN

A2

B2

C2

A3

B3

C3

BLANK

HARNESS ROUTING VIEWS

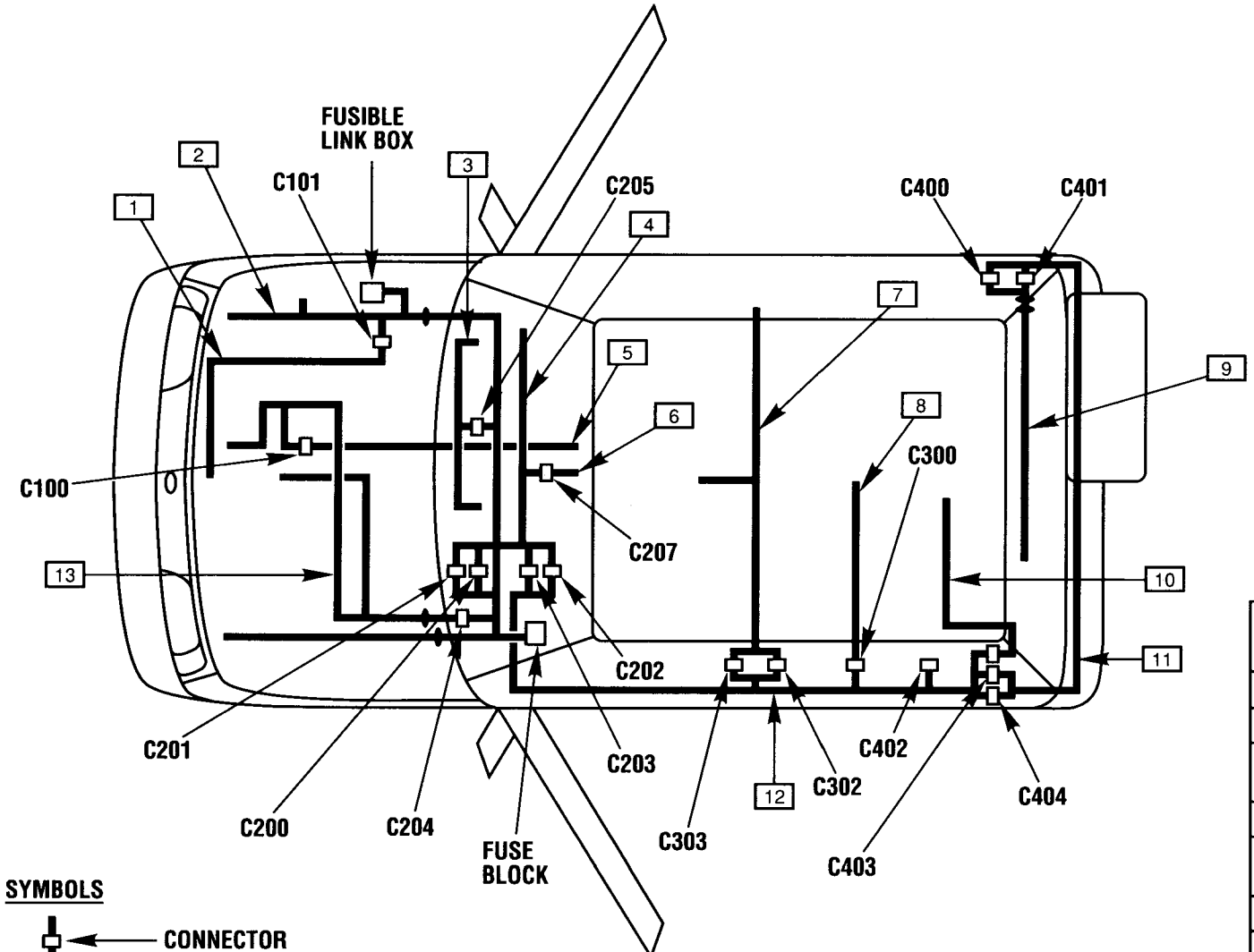

SYMBOLS

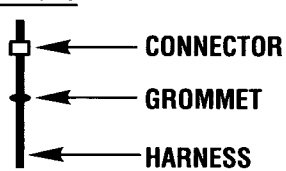

NUMBER	HARNESS NAME
1	OUTER A/C HARNESS
2	MAIN HARNESS
3	INNER A/C HARNESS
4	INSTRUMENT PANEL HARNESS
5	TRANSMISSION HARNESS
6	MANUAL SELECTOR LEVER HARNESS
7	FLOOR HARNESS 2
8	DOME LAMP HARNESS
9	BACK DOOR HARNESS
10	RWAL SPEED SENSOR HARNESS
11	REAR LAMP HARNESS
12	FLOOR HARNESS 1
13	ENGINE HARNESS

BLANK

SECTION 8B

LIGHTING SYSTEMS AND HORN

NOTICE: When fasteners are removed, always reinstall them at the same location from which they were removed. If a fastener needs to be replaced, use the correct part number fastener for that application. If the correct part number fastener is not available, a fastener of equal size and strength (or stronger) may be used. Fasteners that are not reused, and those requiring thread-locking compound, will be called out. The correct torque values must be used when installing fasteners that require them. If the above procedures are not followed, parts or system damage could result.

CONTENTS

General Description 8B-1
Exterior Lighting 8B-2
Backup Lamps 8B-2
Center High-Mounted Stoplamp 8B-2
Daytime Running Lights (DRL) — Canadian Specification Vehicles 8B-2
Headlamps 8B-2
Park/Turn Lamp 8B-2
Side Marker Lamps 8B-2
License Plate Lamps 8B-2
Rear Combination Lamps 8B-2
Interior Lighting 8B-2
Ashtray Illumination Lamp 8B-2
Cigar Lighter Illumination Lamp 8B-2
Dome Lamp 8B-3
Lighting Controls 8B-3
Combination Switch 8B-3
Dimmer Switch Operation 8B-3
Hazard Lamps 8B-3
Illumination Controller 8B-3
Turn Signal Operation 8B-4
Horn 8B-4
Diagnosis 8B-4
Horn 8B-4
Horn Does Not Sound 8B-4
Horn Tone Poor 8B-4
Horn Sounds Constantly 8B-4
Bench Checks 8B-4
On-Vehicle Service 8B-5
Exterior Lighting 8B-5
Backup Lamps 8B-5
Daytime Running Lights (DRL) Controller — Canadian Specification Vehicles 8B-6
Daytime Running Lights (DRL)Resistor — Canadian Specification Vehicles 8B-6
Park/Turn Lamp 8B-6
Headlamp Assembly 8B-9
Headlamp Bulb Replacement 8B-10
Headlamp Aiming 8B-10
License Plate Lamps 8B-11
Rear Combination Lamp Assembly 8B-12
Rear Side Marker Lamps 8B-12
Front Side Marker Lamps 8B-12
Interior Lighting 8B-13
Dome Lamp 8B-13
Instrument Panel Cluster Assembly (Indicator and Illumination) Lamps 8B-13
Instrument Panel Component Illumination and Indicator Lamps 8B-15
Horn 8B-15
Horn Current Adjustment 8B-16
Cold Weather Horn Current Adjustment 8B-16
Switches 8B-16
Specifications 8B-16
Fastener Torques 8B-16
Service Parts Information 8B-16
Bulb Usage Charts 8B-17
Special Tools 8B-19

GENERAL DESCRIPTION

CAUTION: Halogen bulbs contain a gas under pressure. Handling a bulb improperly could cause it to shatter into flying glass fragments. To help avoid personal injury:

- **Turn off lighting system and allow the bulb to cool before changing bulbs. Leave the lighting system off until the bulb change is complete.**
- **Always wear eye protection when changing a halogen bulb.**
- **Handle the bulb only by its base, avoid touching the glass.**
- **Do not drop or scratch the bulb.**
- **Keep moisture away from the bulb.**
- **Place the used bulb in the new bulb's carton and dispose of it properly.**
- **Keep halogen bulbs out of the reach of children.**

EXTERIOR LIGHTING

Backup Lamps

The backup lamps are incorporated into the rear combination lamps. They are designed to operate with the ignition switch in the "ON" position. Placing the manual selector lever (automatic transmission equipped vehicles) or the gearshift control lever (manual transmission equipped vehicles) in "R" (reverse) closes the backup lamps circuit and turns on the backup lamps. This is accomplished through the backup lamp switch (manual transmission equipped vehicles) or the park/neutral position (PNP) switch (automatic transmission equipped vehicles).

Center High-Mounted Stoplamp

This vehicle is not equipped with a center high-mounted stoplamp because of its utility-vehicle designation.

Daytime Running Lights (DRL) — Canadian Specification Vehicles

Daytime running lights (DRL) are standard equipment on all models of this vehicle which are designated for sale in Canada. There is a DRL indicator on the instrument panel cluster assembly of these vehicles. Operating through the low beams at a lower than normal output, the DRL system operates under the following conditions:

1. When the engine is running.
2. When the parking brake is not applied.
3. When the light switch is in either the "OFF" or parklamp position.

For DRL system diagnosis, refer to SECTION 8A.

Headlamps

All models are equipped with composite headlamps. Each composite headlamp consists of one halogen bulb which provides both high- and low-beam operation and a headlamp assembly. Because the bulb is separate from the assembly, it is not necessary to re-aim the headlights if only the bulb is being replaced and the entire assembly is not removed from the vehicle. For adjusting procedures, refer to "Headlamp Aiming" later in this section.

Park/Turn Lamp

The park/turn lamp is located in the front fender, next to the headlamps. Each lamp consists of a clear lens over an amber, dual filament bulb. The turn signal filament will illuminate when the turn signals are operating. The parking lamp filament will illuminate when either the parking lamps or headlamps are activated.

Side Marker Lamps

The side marker lamps are single filament bulbs covered by amber lenses. They are operational anytime the parking lamps or headlamps are activated.

License Plate Lamps

There are two license plate lamps located in the rear door handle cover directly over the license plate. Each license plate lamp contains one clear, single filament bulb. The license plate lamp bulb filament will light when either the parking lamps or headlamps are activated.

Rear Combination Lamps

The rear combination lamps are located on each side of the back door. Each rear combination lamp consists of a dual filament stoplamp/taillamp bulb and single filament turn signal and backup bulbs. The stoplamp filament lights whenever the stoplamp switch is closed by depressing the brake pedal. The taillamp filament lights when either the parking lamps or headlamps are activated. The turn signal filament lights during turn signal operation.

INTERIOR LIGHTING

Ashtray Illumination Lamp

The ashtray illumination lamp is lit whenever the parking lamps or the headlamps are activated.

Cigar Lighter Illumination Lamp

The cigar lighter illumination lamp is lit whenever the parking lamps or the headlamps are activated. The cigar lighter illumination lamp bulb socket is attached to the cigar lighter.

Dome Lamp

The dome lamp is centered on the roof above the seatbacks of the front seats. It consists of a clear lens, the dome lamp bulb and a three-position slide switch. The slide switch has three detent positions: left (off), center (on), and right (door). With the switch in the left position, the dome lamp will not light, regardless of whether either door jamb switch is open or closed. With the dome lamp switch in the right position, the lamp will light when either door is open (either door jamb switch is closed). The lamp will remain on until both doors are closed (both door jamb switches are opened). When the dome lamp switch is in the center position, the dome lamp will light, regardless of whether either door jamb switch is open or closed.

LIGHTING CONTROLS

Combination Switch

Figure 1

The combination switch, located on the steering column, consists of the hazard switch and two levers (Figure 1). The first lever is the combination (light/dimmer/turn signal) lever located on the left side of the steering column. The second lever is the combination (windshield wiper/washer) lever located on the right side of the steering column. A twist type knob on the end of the the combination (light/dimmer/turn signal) lever controls the operation of the parking lamps and headlamps. When either the parking lamps or headlamps are activated, the taillamps, all side marker lamps and license plate lamps also illuminate. When either the parking lamps or headlamps are activated, the instrument panel cluster assembly, cigar lighter, ashtray and the manual selector illumination lamps also illuminate.

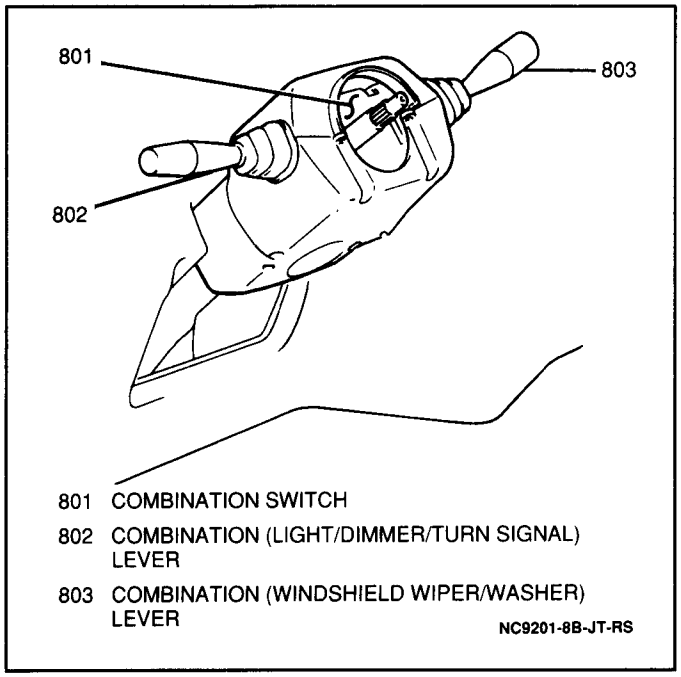

Figure 1 Combination Switch

Moving the combination (light/dimmer/turn signal) lever forward and rearward controls the operation of the dimmer switch while moving the lever up and down controls the turn signals.

Refer to SECTION 3F1 (standard column) or SECTION 3F2 (tilt column) for combination switch removal and installation procedures.

Dimmer Switch Operation

Figure 1

The combination (light/dimmer/turn signal) switch lever controls both low-beam and high-beam headlamp operations. It is located on the left side of the steering column (Figure 1). With the headlamps activated, pushing the turn signal/dimmer switch lever forward into the detent position changes the headlamps from low-beam to high-beam operation. Pulling the lever back to the center position will return the headlamps to low-beam operation.

With the lighting system in either the "OFF," parklamp or low-beam headlamp setting, pulling the turn signal/dimmer switch lever rearward will cause the high-beam headlamps to illuminate. Releasing the lever (allowing it to return to the center) returns the system to the previous setting ("OFF," parklamp or low-beam headlamp). This "flash-to-pass" feature allows the driver to signal the driver of another vehicle his intention to pass.

Refer to SECTION 3F1 (standard column) or SECTION 3F2 (tilt column) for combination switch removal and installation procedures.

Hazard Lamps

The hazard switch is a part of the combination switch. It is located on the upper steering column cover and controls the operation of the hazard lamp circuit. Pressing the hazard switch to the on position will cause the turn relay to disengage the turn signal circuit and engage the hazard lamp circuit. This causes both turn indicators in the instrument panel cluster assembly to flash on and off along with all exterior turn signal lamps. The hazard lamp circuit will operate regardless of the position of the ignition switch. Pressing the hazard switch again returns it to the off position, disengages the hazard lamp circuit and returns the turn relay to the turn signal mode.

Refer to SECTION 3F1 (standard column) or SECTION 3F2 (tilt column) for combination switch removal and installation procedures. Refer to SECTION 8C for turn relay removal and installation procedures.

Illumination Controller

Figure 2

The intensity of the instrument panel and instrument panel cluster assembly illumination lamps is adjusted by an illumination controller located on the lower left side of the instrument panel (Figure 2). Rotating the illumination controller clockwise will brighten the instrument panel cluster assembly, cluster bezel switches (rear defogger, rear wiper and rear washer, if equipped), heater control unit, ashtray and cigar lighter illumination lamps. Rotating

the illumination controller counterclockwise will dim the above mentioned lamps. The radio display illumination brightness will not be affected by the illumination controller. The radio display is lit with the ignition switch in the "ON" position. The parking lamps or headlamps must be activated for the instrument panel and instrument panel cluster assembly illumination lamps to be illuminated.

Refer to SECTION 8C for illumination controller removal and installation procedures.

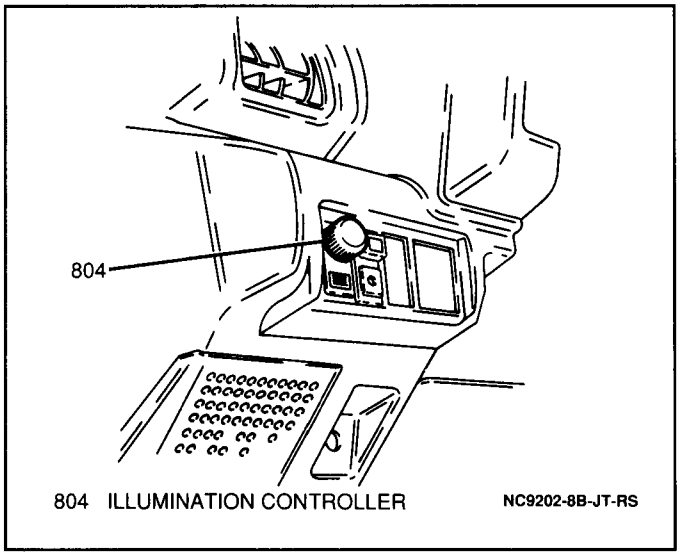

Figure 2 Illumination Controller

Turn Signal Operation

Figure 1

Turn signal operation is controlled by the turn relay located in the junction block, and the combination (light/dimmer/turn signal) lever. The combination (light/dimmer/turn signal) lever is located on the left side of the steering column (Figure 1). In order for the turn signals to operate, the ignition switch must be in the "ON" position.

When making a partial turn, such as when changing lanes, the driver has the option of moving the lever to a detent stop. The turn signal lamp and the instrument panel turn signal indicator will continue to flash as long as the lever is held in this position and will cancel automatically when the lever is released. The detent position allows a lane change or shallow turn to be made without failing to cancel the turn signal lamp. Moving the lever past the detent position to its furthest upward or downward position will provide conventional turn signal operation.

Refer to SECTION 3F1 (standard column) or SECTION 3F2 (tilt column) for combination switch removal and installation procedures.

HORN

The horn is located under the hood and is attached to the left side of the radiator core support. It is activated by depressing the center of the steering wheel. For additional details of the horn electrical circuit, refer to SECTION 8A.

DIAGNOSIS

HORN

Horn Does Not Sound

Refer to SECTION 8A for horn electrical diagnosis.

Horn Tone Poor

1. Harsh tone — caused by loose bolts in sheet metal mounting area.
2. Weak, strained tone — possible foreign body in horn that should be shaken out or removed.
3. Weak tone — caused by insufficient current. Refer to "Horn Current Adjustment" later in this section.
4. Low pitched moan — caused by excessive current. Refer to "Horn Current Adjustment" later in this section.
5. Harsh vibration — caused by horn contacting sheet metal. Bracket should be adjusted to give horn clearance and freedom from interference.

Horn Sounds Constantly

1. This condition can be caused by sticking relay contacts in the relay or horn pad.
2. Horn relay may be energized by wiring shorted to ground.

Burned (open) windings on most horns are caused by one of the above malfunctions. Before horns with open windings are replaced, make sure that none of the above conditions exist, or the horn windings will burn open again.

Bench Checks

Measure

- Current draw of the horn while horn is operating. Current draw for the horn should be between 4.5 and 5.5 amps at 11.5 to 12.5 volts.
  1. No current reading may indicate a broken connection or an open circuit due to a broken terminal or overheating. Most horn problems are caused by the horn being operated continuously, developing sufficient heat to melt the wires in the winding, causing an open circuit. Overheating is accompanied by a characteristic odor which indicates that the horn has overheated and should be replaced.
  2. Absence of current can also indicate that the contact points are open and a current adjustment is required. Refer to "Horn Current Adjustment" later in this section.
  3. High current, over 20 amps, indicates a shorted horn which should be replaced.
  4. A reading of approximately 18 amps for a 12 volt horn indicates a condition in which the contact points are not opening and current adjustment is required. Refer to "Horn Current Adjustment" later in this section.

ON-VEHICLE SERVICE

EXTERIOR LIGHTING

Important

- Refer to "Bulb Usage Charts" later in this section for correct replacement bulb specifications.

Backup Lamps

Figures 3 and 4

Remove or Disconnect

1. Negative (-) battery cable.
2. Two screws at bottom of rear combination lamp assembly (Figure 3).

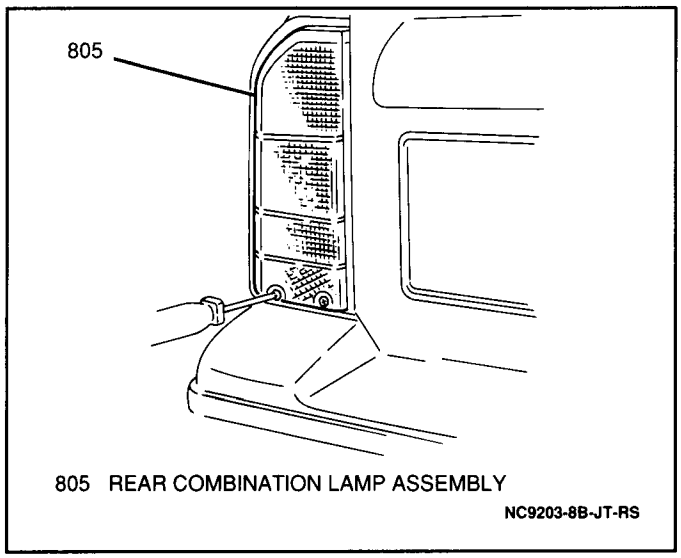

Figure 3 Removing Rear Combination Lamp Assembly

3. Rear combination lamp assembly from vehicle by pulling upward and rearward.
4. Backup lamp bulb socket from lamp assembly (Figure 4).
5. Backup lamp bulb from socket.

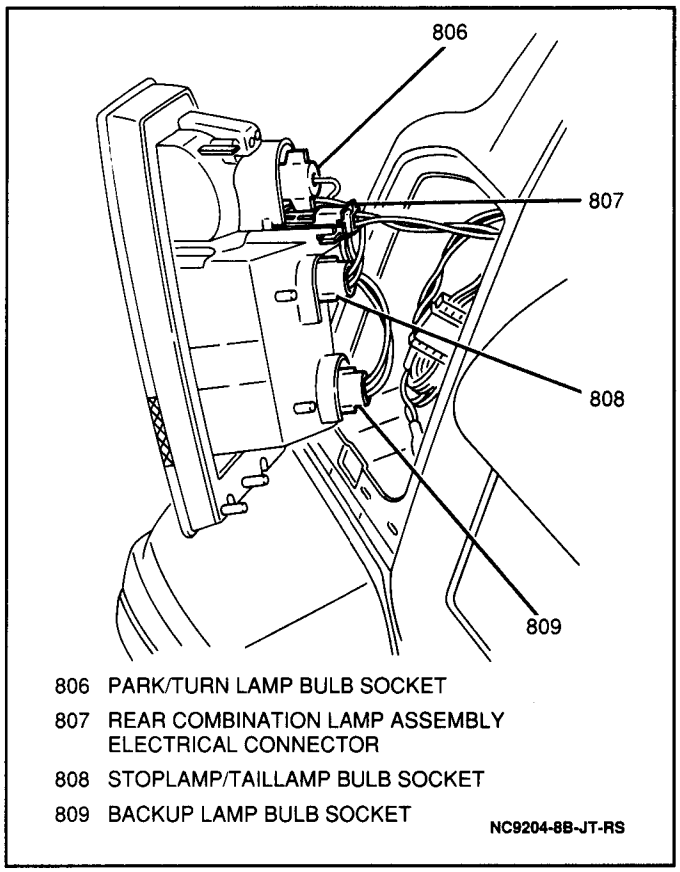

Figure 4 Rear Combination Lamp Identification

Install or Connect

1. Backup lamp bulb to socket.
2. Backup lamp bulb socket to lamp assembly.
3. Rear combination lamp assembly to vehicle; secure with two screws.
4. Negative (-) battery cable.

Tighten

- Negative (-) battery cable-to-negative (-) battery terminal retainer to 15 N·m (11 lb.ft.).

Daytime Running Lights (DRL) Controller — Canadian Specification Vehicles

Figure 5

Remove or Disconnect

1. Negative (-) battery cable.
2. Two screws and remove lower steering column trim panel from vehicle.
3. DRL controller electrical connector.
4. One mounting screw and remove DRL controller from vehicle (Figure 5).

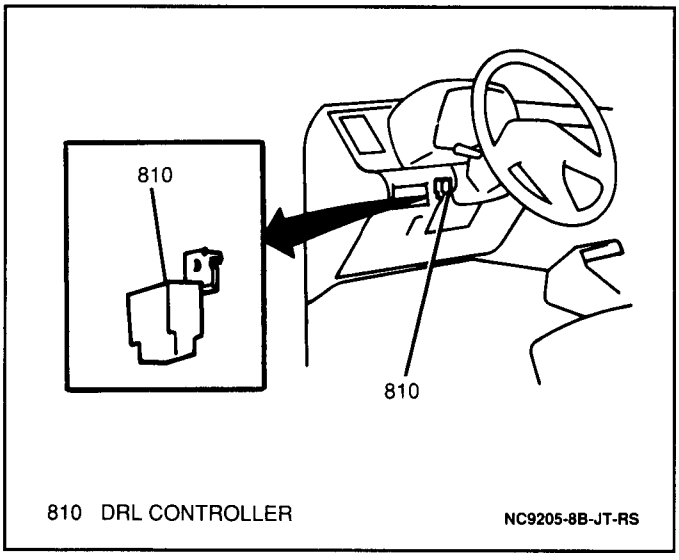

Figure 5 Daytime Running Lights (DRL) Controller Location

Install or Connect

1. DRL controller to vehicle; secure with one mounting screw.
2. DRL controller electrical connector.
3. Lower steering column trim panel; secure with two screws.
4. Negative (-) battery cable.

Tighten

- Negative (-) battery cable-to-negative (-) battery terminal retainer to 15 N·m (11 lb.ft.).

Daytime Running Lights (DRL) Resistor — Canadian Specification Vehicles

Figure 6

Remove or Disconnect

1. Negative (-) battery cable.
2. Five screws, four clips and wheelhousing from left front fender.
3. Coolant recovery reservoir. Refer to SECTION 6B.
4. DRL resistor electrical connector.
5. Two screws and remove DRL resistor from vehicle (Figure 6).

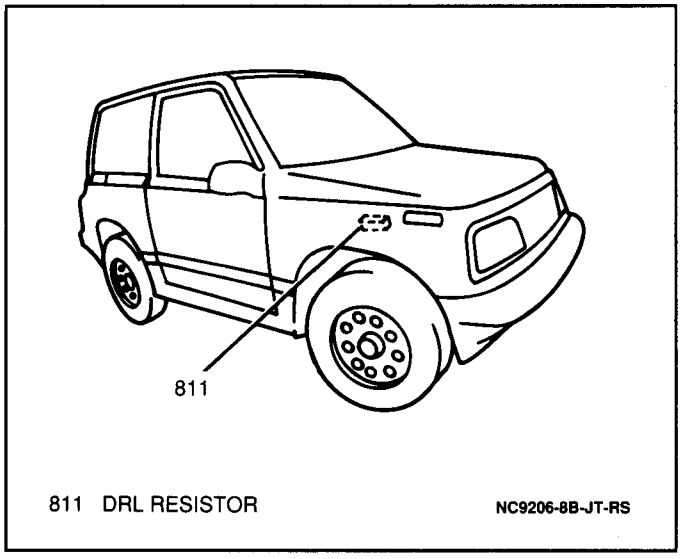

Figure 6 Daytime Running Lights (DRL) Resistor Location

6. Bracket from DRL resistor (if required).

Install or Connect

1. Bracket to DRL resistor (if removed).
2. DRL resistor to vehicle; secure with two screws.
3. DRL resistor electrical connector.
4. Coolant recovery reservoir. Refer to SECTION 6B.
5. Wheelhousing to left front fender; secure with five screws and four clips.
6. Negative (-) battery cable.

Tighten

- Negative (-) battery cable-to-negative (-) battery terminal retainer to 15 N·m (11 lb.ft.).

Park/Turn Lamp

Lamp Housing

Figures 7 through 11

Remove or Disconnect

1. Negative (-) battery cable.
2. Two plastic retaining clips securing bottom of front grille to vehicle.
3. One screw from top center of grille.

4. One screw retaining front grille from inside front of each wheelhousing (Figure 7).

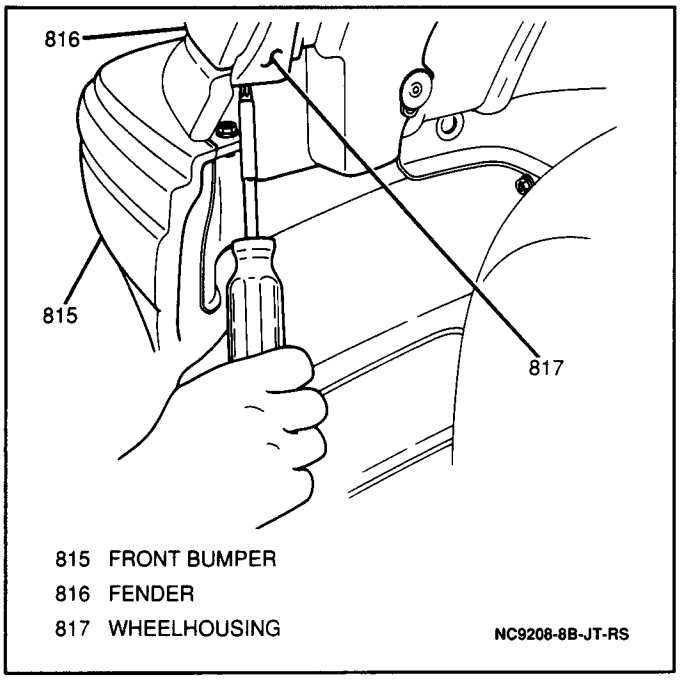

Figure 7 Removing Front Grille Retaining Screw From Wheelhousing

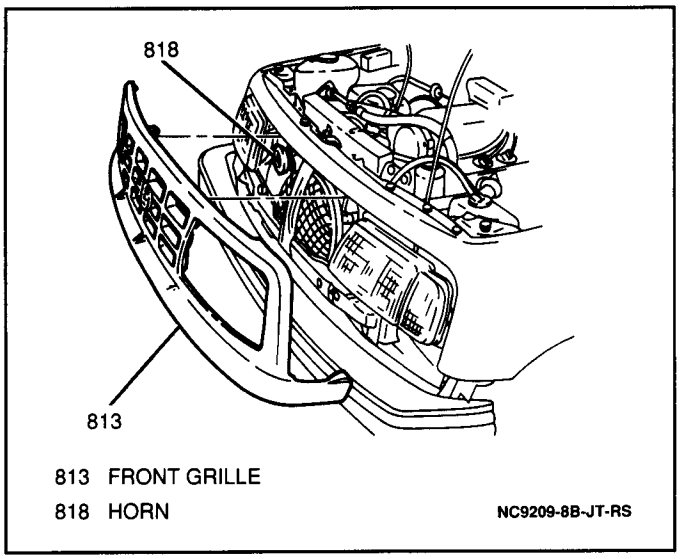

Figure 8 Removing Front Grille

- Pull bottom of front grille out and remove from vehicle (Figure 8).
- Turn lock ring counterclockwise and remove headlamp bulb from headlamp assembly (Figure 9).

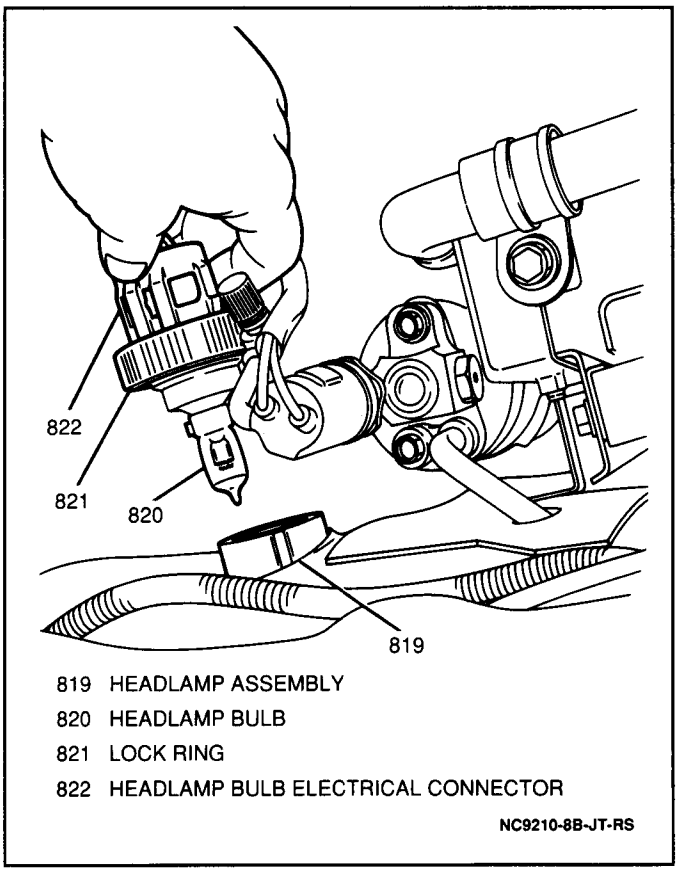

Figure 9 Removing Headlamp Bulb

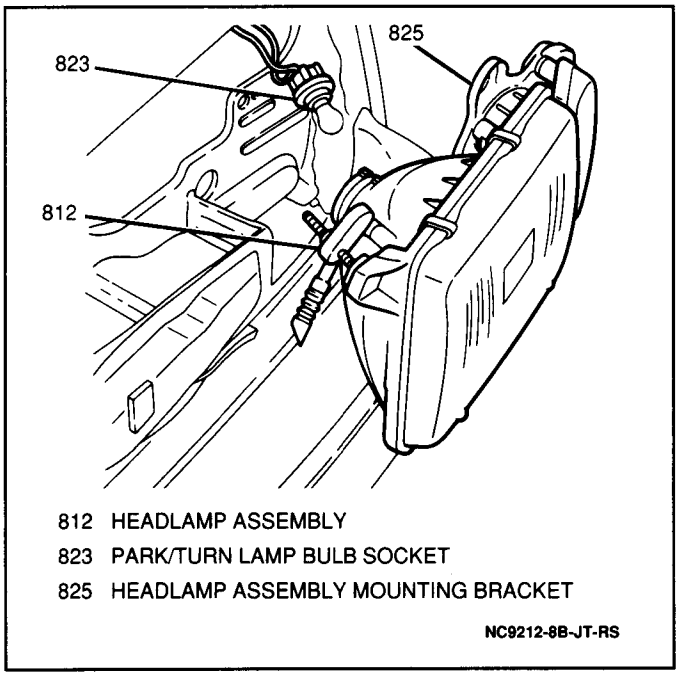

Figure 10 Removing Headlamp Assembly

5. Four screws from headlamp assembly and remove headlamp assembly from vehicle (Figure 10).
6. Park/turn lamp bulb socket from park/turn lamp housing (Figure 10).
7. Three screws from park/turn lamp housing and remove housing from headlamp assembly mounting bracket (Figure 11).

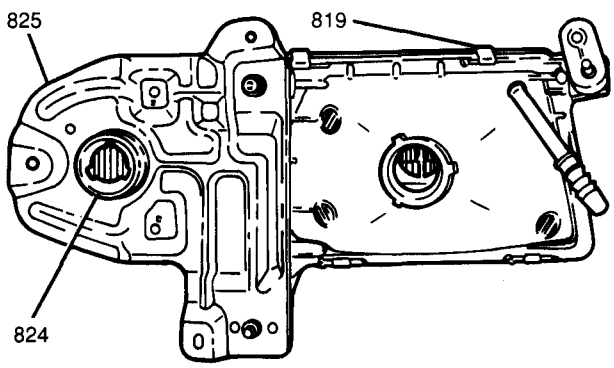

819 HEADLAMP ASSEMBLY
824 PARK/TURN LAMP HOUSING
825 HEADLAMP ASSEMBLY MOUNTING BRACKET
NC9213-8B-JT-RS

Figure 11 Headlamp Assembly Mounting Bracket

Install or Connect

1. Park/turn lamp housing to headlamp assembly mounting bracket; secure with three screws.
2. Park/turn lamp bulb socket to park/turn lamp housing.
3. Headlamp assembly to vehicle; secure with four screws.
4. Headlamp bulb to headlamp assembly; secure by turning lock ring clockwise.
5. Grille to vehicle; secure with one screw at top center and two plastic retaining clips at bottom of grille.
6. One screw securing grille to inside of each front wheelhousing.
7. Negative (-) battery cable.

Tighten

- Negative (-) battery cable-to-negative (-) battery terminal retainer to 15 N·m (11 lb.ft.).

Bulb Replacement

Figure 10

Remove or Disconnect

1. Negative (-) battery cable.
2. Park/turn lamp bulb socket from park/turn lamp housing (Figure 10).
3. Park/turn lamp bulb from park/turn lamp bulb socket.

Install or Connect

1. Park/turn lamp bulb into park/turn lamp bulb socket.
2. Park/turn lamp bulb socket into park/turn lamp housing.
3. Negative (-) battery cable.

Tighten

- Negative (-) battery cable-to-negative (-) battery terminal retainer to 15 N·m (11 lb.ft.).

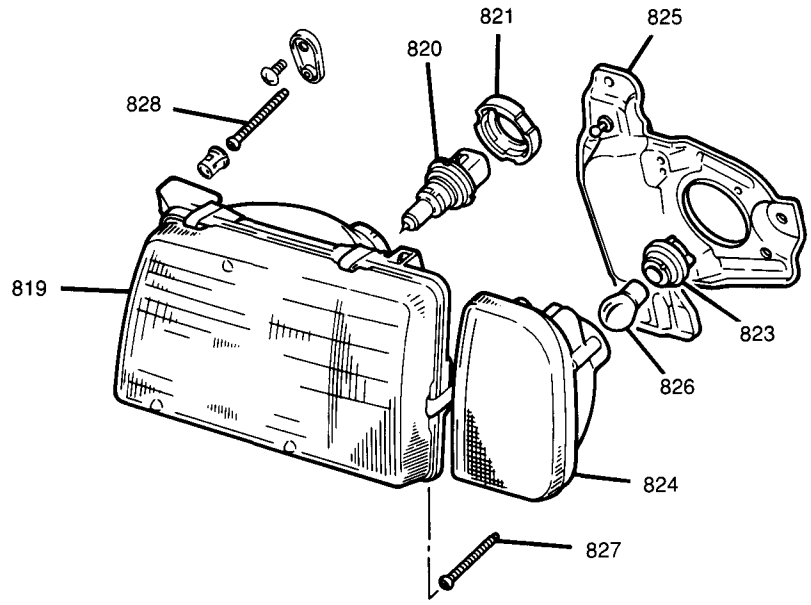

819 HEADLAMP ASSEMBLY
820 HEADLAMP BULB
821 LOCK RING
823 PARK/TURN LAMP BULB SOCKET
824 PARK/TURN LAMP HOUSING
825 HEADLAMP ASSEMBLY MOUNTING BRACKET
826 PARK/TURN LAMP BULB
827 VERTICAL HEADLAMP ADJUSTING SCREW
828 HORIZONTAL HEADLAMP ADJUSTING SCREW

NC9214-8B-JT-RS

Figure 12 Exploded View — Headlamp Assembly

Headlamp Assembly

Figures 7 through 12

CAUTION: Halogen bulbs contain a gas under pressure. Handling a bulb improperly could cause it to shatter into flying glass fragments. To help avoid personal injury:

- **Turn off lighting system and allow the bulb to cool before changing bulbs. Leave the lighting system off until the bulb change is complete.**
- **Always wear eye protection when changing a halogen bulb.**
- **Handle the bulb only by its base; avoid touching the glass.**
- **Do not drop or scratch the bulb.**
- **Keep moisture away from the bulb.**
- **Place the used bulb in the new bulb's carton and dispose of it properly.**
- **Keep halogen bulbs out of the reach of children.**

Remove or Disconnect

1. Negative (-) battery cable.
2. Two plastic retaining clips securing bottom of front grille to vehicle.
3. One screw from top center of grille.
4. One screw retaining front grille from inside front of each wheelhousing (Figure 7).
   - Pull bottom of grille out and remove from vehicle (Figure 8).
   - Turn lock ring counterclockwise and remove headlamp bulb from headlamp assembly (Figure 9).
5. Four screws from headlamp assembly and remove headlamp assembly from vehicle (Figure 10).
6. Park/turn lamp bulb socket from park/turn lamp housing (Figure 10).
7. Two screws, one nut, and headlamp assembly from headlamp assembly mounting bracket (Figures 11 and 12).

Install or Connect

1. Headlamp assembly to headlamp assembly mounting bracket; secure with two screws and one nut.

   Tighten

   - Headlamp assembly-to-headlamp assembly mounting bracket nut to 10 N·m (89 lb.in.).
2. Park/turn lamp bulb socket to park/turn lamp housing.
3. Headlamp assembly to vehicle; secure with four screws.
4. Headlamp bulb to headlamp assembly; secure by turning lock ring clockwise.
5. Front grille to vehicle. Secure with one screw at top center and two plastic retaining clips at bottom of front grille.
6. One screw securing grille to inside of each front wheelhousing.
7. Negative (-) battery cable.

Tighten

- Negative (-) battery cable-to-negative (-) battery terminal retainer to 15 N·m (11 lb.ft.).

Headlamp Bulb Replacement

Figures 9 and 13

CAUTION: Halogen bulbs contain a gas under pressure. Handling a bulb improperly could cause it to shatter into flying glass fragments. To help avoid personal injury:

- **Turn off lighting system and allow the bulb to cool before changing bulbs. Leave the lighting system off until the bulb change is complete.**
- **Always wear eye protection when changing a halogen bulb.**
- **Handle the bulb only by its base, avoid touching the glass.**
- **Do not drop or scratch the bulb.**
- **Keep moisture away from the bulb.**
- **Place the used bulb in the new bulb's carton and dispose of it properly.**
- **Keep halogen bulbs out of the reach of children.**

Remove or Disconnect

1. Negative (-) battery cable.
2. Headlamp bulb electrical connector (Figure 13).

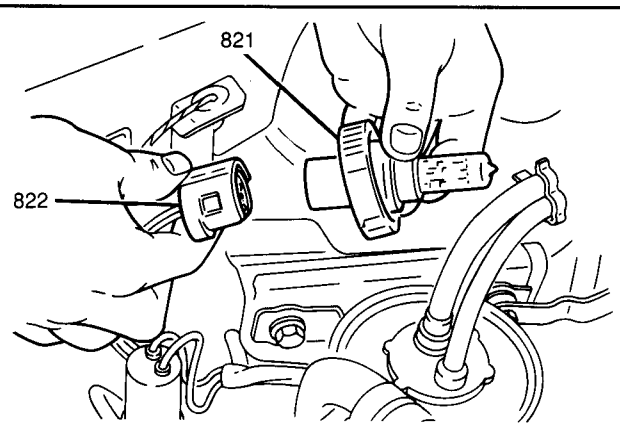

821 LOCK RING
822 HEADLAMP BULB ELECTRICAL CONNECTOR
NC9211-8B-JT-RS

Figure 13 Disconnecting Headlamp Bulb Electrical Connector

- Loosen headlamp bulb lock ring by rotating counterclockwise.
- Pull headlamp bulb, with lock ring, from headlamp assembly. Save the lock ring and use with new bulb (Figure 9).

Install or Connect

1. Headlamp bulb to headlamp assembly; secure with lock ring by rotating lock ring clockwise.
2. Headlamp bulb electrical connector.
3. Negative (-) battery cable.

Tighten

- Negative (-) battery cable-to-negative (-) battery terminal retainer to 15 N·m (11 lb.ft.).

Headlamp Aiming

Figure 14

Tool Required:
J 25300-B Headlamp Aimer Kit

The headlamps must be properly aimed in order to obtain the maximum road illumination and safety that has been built into the headlamp system. With halogen headlamps, proper aiming is very important. Because of the increased range and power of these lamps, even slight variations from recommended aiming can be hazardous to approaching motorists. Composite headlamps, however, do not require aiming if only the bulb has been replaced.

When checking or adjusting headlamp aim, observe the following conditions:

- The vehicle must be on a level surface.
- Tires must be uniformly inflated to specified pressure. Refer to the tire placard located on the rear of the left-door frame for tire pressure specifications.
- If the vehicle will regularly tow a trailer or carry an unusual load in the rear these loads should be on the vehicle when headlamps are checked.
- Clean headlamps before aiming.
- All states have requirements for headlamp aiming that must be followed.

The J 25300-B is designed to accommodate all composite and sealed beam headlamps in any standard shape or size and in any configuration. Different lamp shapes and sizes are accommodated through the use of adapters provided in the kit. Regardless of configuration, headlamps are always aimed in pairs.

The mounting and adjustment instructions are included in the J 25300-B.

1. The universal aimer should be used on a known level floor or calibrated for floor slope.
2. Select and assemble the universal adapter that matches the aiming pad pattern on the lens of the headlamp.

3. Align the selected adapter to the aiming pads. Move the adjustment rod for each pad until it agrees with the adjustment rod setting number located on the headlamp. On some lamps the numbers are located along the lower edge or the vertical edge of the lens.
4. To adjust the rods to the required position, turn them to the neutral position and slide the rods in or out to the proper setting.
5. Attach adapters making certain that the correct adapter issued with the correct side aimer.
6. Place the aimers with adapters onto their respective sides making certain all adjustment rods and the articulating suction cup are contacting the aiming pads. It may be necessary to add or remove extension studs.
7. Aim headlamps according to the instructions included in J 25300-B.
   - To adjust horizontal aim: Turn horizontal headlamp adjusting screw (Figure 14).
   - To adjust vertical aim: Turn vertical headlamp adjusting screw (Figure 14).

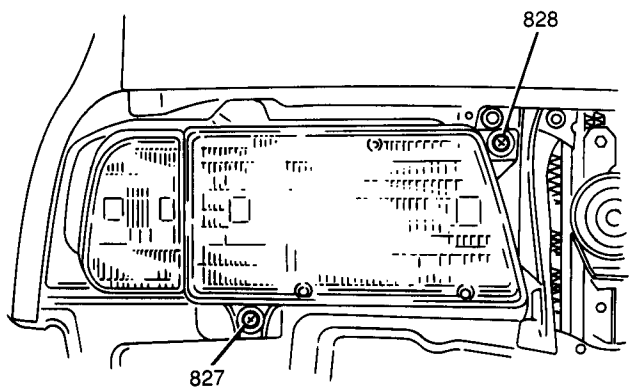

827 VERTICAL HEADLAMP ADJUSTING SCREW
828 HORIZONTAL HEADLAMP ADJUSTING SCREW
NC9215-8B-JT-RS

Figure 14 Headlamp Adjusting Screws

License Plate Lamps

Figures 15 and 16

Remove or Disconnect

1. Negative (-) battery cable.
2. Two screws and license plate lamp assembly from rear door (Figure 15).

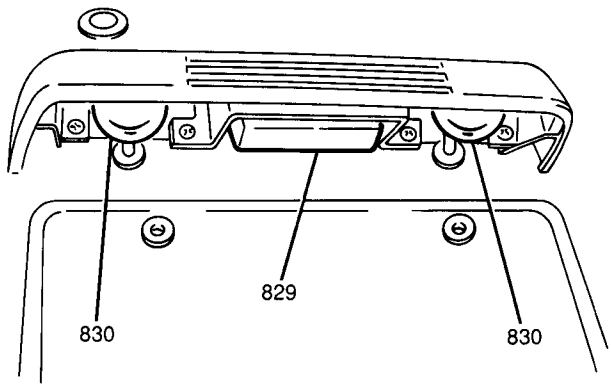

829 REAR DOOR HANDLE
830 LICENSE PLATE LAMP ASSEMBLIES (2)
NC9216-8B-JT-RS

Figure 15 License Plate Lamp Assembly

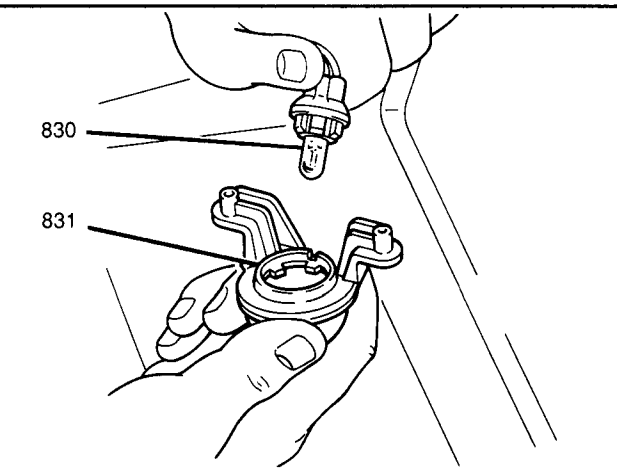

830 LICENSE PLATE LAMP ASSEMBLY
831 LICENSE PLATE LAMP BULB SOCKET
NC9217-8B-JT-RS

Figure 16 Removing License Plate Bulb Socket

3. License plate bulb socket from lamp assembly (Figure 16).
4. License plate lamp bulb from socket.

Install or Connect

1. License plate lamp bulb to socket.
2. License plate bulb socket to lamp assembly.
3. License plate lamp assembly to rear door; secure with two screws.
4. Negative (-) battery cable.

Tighten

- Negative (-) battery cable-to-negative (-) battery terminal retainer to 15 N·m (11 lb.ft.).

Rear Combination Lamp Assembly

Figures 3 and 4

Remove or Disconnect

1. Negative (-) battery cable.
2. Two screws securing rear combination lamp assembly (Figure 3).
- Pull rear combination lamp assembly away from rear end panel to gain access to bulb sockets.
3. Electrical connector and three bulb sockets from lamp assembly (Figure 4).
4. Rear combination lamp assembly from vehicle.
5. Bulb(s) from socket(s) (if necessary).

Install or Connect

1. Bulb(s) to socket(s) (if removed).
2. Three bulb sockets and electrical connector to rear combination lamp assembly.
3. Rear combination lamp assembly to rear end panel; secure with two screws.
4. Negative (-) battery cable.

Tighten

- Negative (-) battery cable-to-negative (-) battery terminal retainer to 15 N·m (11 lb.ft.).

Rear Side Marker Lamps

Figure 17

Remove or Disconnect

1. Negative (-) battery cable.
- Gently pry rear end of rear side marker lamp from body, disengaging retaining clip (convertible models) (Figure 17).

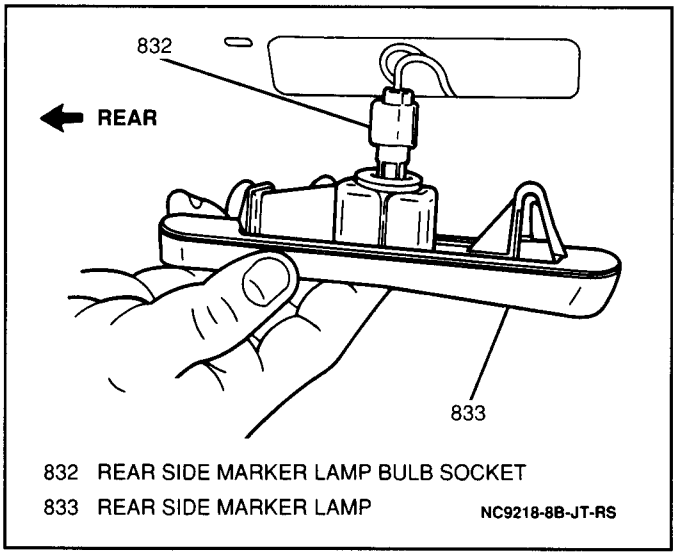

Figure 17 Rear Side Marker Lamp Removal

2. One screw securing rear side marker lamp to body (hardtop models) and disengage retaining clip from body.
3. Rear side marker lamp bulb socket from rear side marker lamp.
4. Bulb from socket (if necessary).

Install or Connect

1. Bulb to socket (if removed).
2. Rear side marker lamp bulb socket to rear side marker lamp.
3. Rear side marker lamp to body, engaging retaining clip.
4. One screw securing rear side marker lamp (hardtop models).
5. Negative (-) battery cable.

Tighten

- Negative (-) battery cable-to-negative (-) battery terminal retainer to 15 N·m (11 lb.ft.).

Front Side Marker Lamps

Figure 18

Remove or Disconnect

1. Negative (-) battery cable.
- Gently pry front end of front side marker lamp from body, disengaging retaining clip (Figure 18).

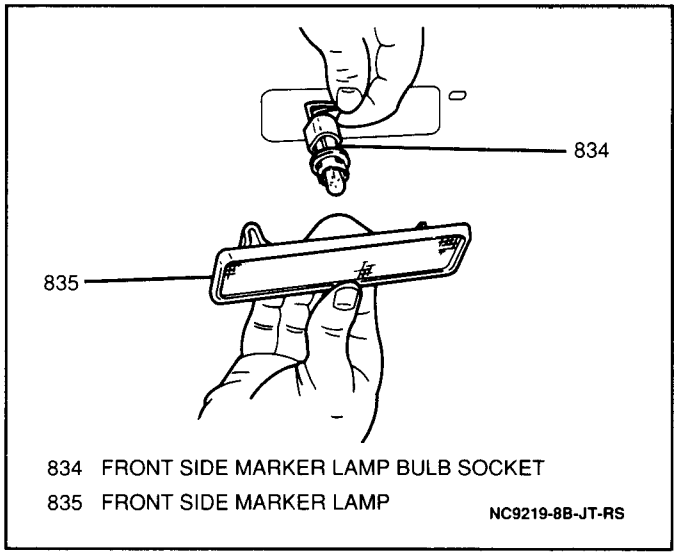

Figure 18 Front Side Marker Lamp Removal

2. Front side marker lamp bulb socket from front side marker lamp.
3. Bulb from socket (if necessary).

Install or Connect

1. Bulb to socket (if removed).
2. Front side marker lamp bulb socket to front side marker lamp.
3. Front side marker lamp to vehicle, gently push side marker lamp securely against body to engage retaining clip.
4. Negative (-) battery cable.

Tighten

- Negative (-) battery cable-to-negative (-) battery terminal retainer to 15 N·m (11 lb.ft.).

INTERIOR LIGHTING

Important

- Refer to "Bulb Usage Charts" later in this section for correct replacement bulb specifications.

Dome Lamp

Figure 19

Remove or Disconnect

1. Negative (-) battery cable.
- Gently pry dome lamp lens from dome lamp assembly with a flat-bladed screwdriver (Figure 19).

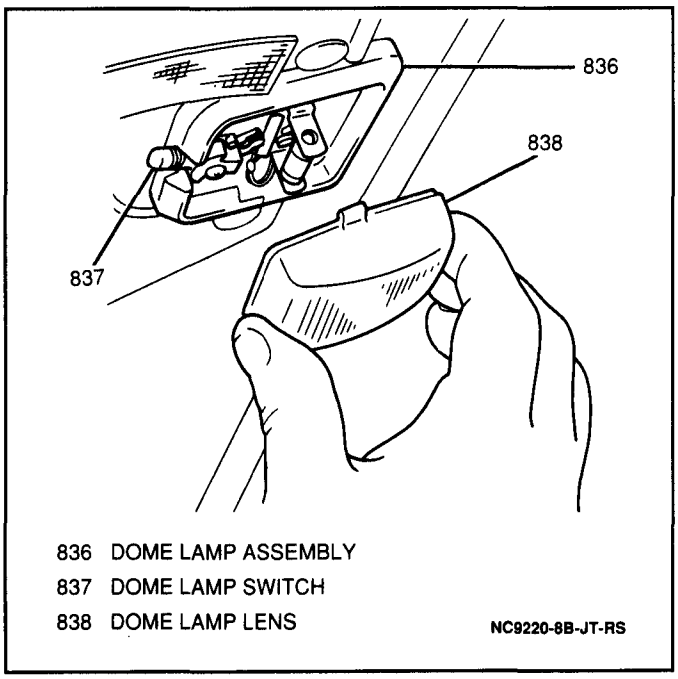

Figure 19 Removing Dome Lamp Assembly

2. Dome lamp bulb from dome lamp assembly (if necessary).
3. Two screws and dome lamp assembly from headlining.
4. Dome lamp electrical connector and remove assembly from vehicle.

Install or Connect

1. Dome lamp assembly to vehicle; connect electrical connector.
2. Dome lamp assembly to headlining; secure with two screws.
3. Dome lamp bulb to dome lamp assembly (if removed).
4. Dome lamp lens to dome lamp assembly.
5. Negative (-) battery cable.

Tighten

- Negative (-) battery cable-to-negative (-) battery terminal retainer to 15 N·m (11 lb.ft.).

Instrument Panel Cluster Assembly (Indicator and Illumination) Lamps

Figures 20 and 21

Remove or Disconnect

1. Negative (-) battery cable.
2. Instrument panel cluster assembly from vehicle. Refer to SECTION 8C.
3. Bulb socket(s) from back of cluster assembly as required (Figures 20 and 21).
4. Bulb(s) from bulb socket(s) as required.

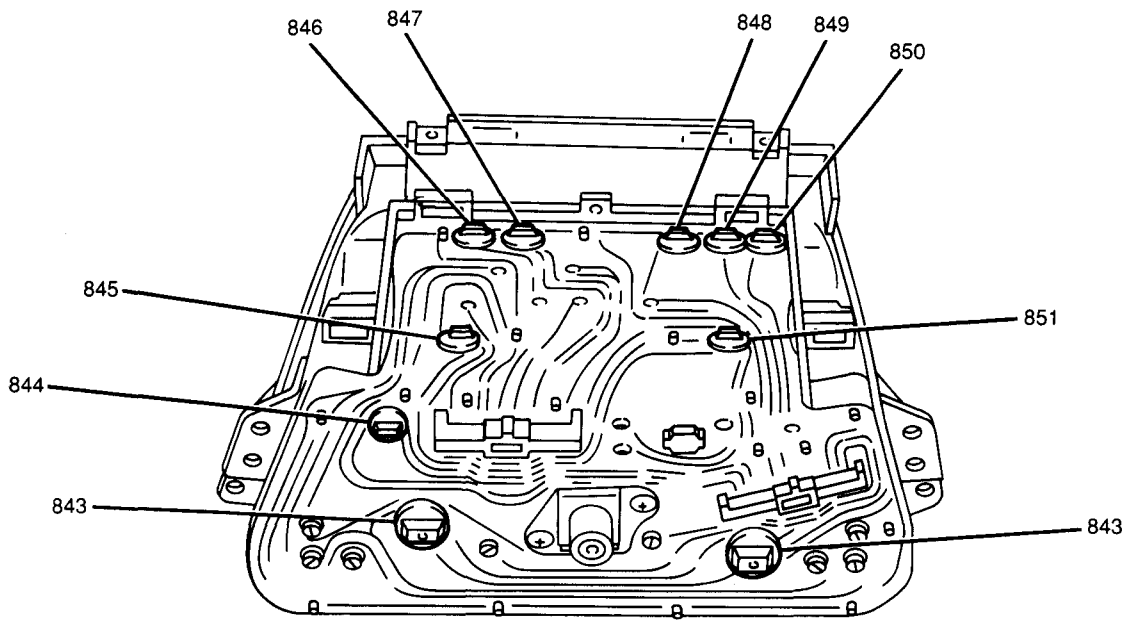

843 INSTRUMENT PANEL CLUSTER ASSEMBLY ILLUMINATION BULBS
844 HIGH-BEAM INDICATOR BULB
845 RH TURN INDICATOR BULB
846 SEAT BELT INDICATOR BULB
847 CHARGE INDICATOR BULB
848 "BRAKE" INDICATOR BULB
849 OIL PRESSURE INDICATOR BULB
850 MALFUNCTION INDICATOR LAMP (MIL) ("CHECK ENGINE") BULB
851 LH TURN INDICATOR BULB

PC9221-8B-EJ-RS

Figure 20 Instrument Panel Cluster Assembly (Indicator and Illumination) Lamps (Without Tachometer)

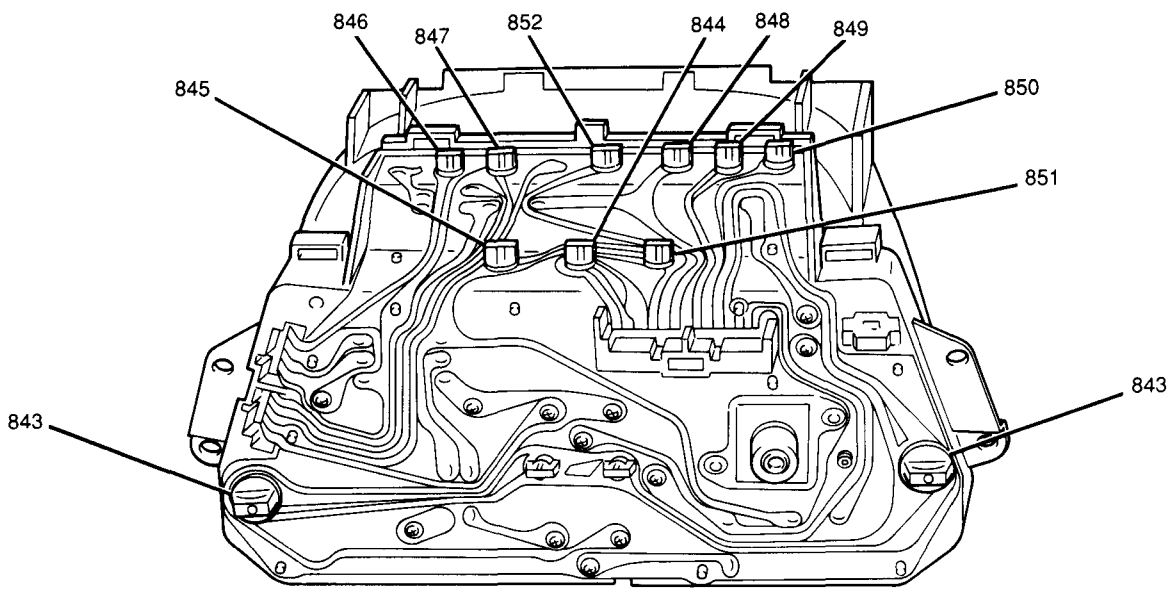

843 INSTRUMENT PANEL CLUSTER ASSEMBLY ILLUMINATION BULBS
844 HIGH-BEAM INDICATOR BULB
845 RH TURN INDICATOR BULB
846 SEAT BELT INDICATOR BULB
847 CHARGE INDICATOR BULB
848 "BRAKE" INDICATOR BULB
849 OIL PRESSURE INDICATOR BULB
850 MALFUNCTION INDICATOR LAMP (MIL) ("CHECK ENGINE") BULB
851 LH TURN INDICATOR BULB
852 "4WD" INDICATOR BULB

PC9222-8B-EJ-RS

Figure 21 Instrument Panel Cluster Assembly (Indicator and Illumination) Lamps (With Tachometer)

Install or Connect

1. Bulb(s) to bulb socket(s) as required.
2. Bulb socket(s) to back of cluster as required.
3. Instrument panel cluster assembly to vehicle. Refer to SECTION 8C.
4. Negative (-) battery cable.

Tighten

- Negative (-) battery cable-to-negative (-) battery terminal retainer to 15 N·m (11 lb.ft.).

Instrument Panel Component Illumination and Indicator Lamps

Figures 22 and 23

The following components are equipped with serviceable illumination/indicator lamp bulbs:

- Ashtray assembly.
- Cigar lighter (Figure 22).

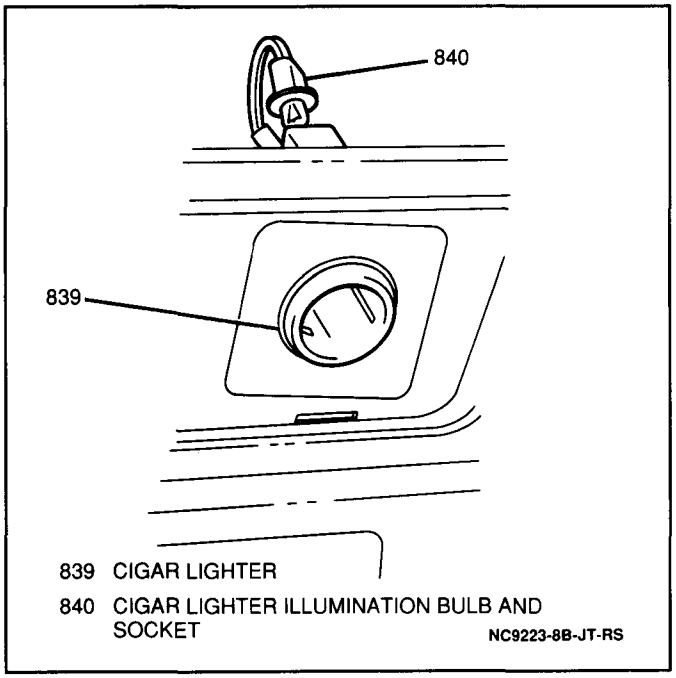

Figure 22 Cigar Lighter Illumination Lamp

- Heater control unit.
- Rear defogger switch (if equipped).
- Rear wiper/washer switch (if equipped).
- Manual selector lever (automatic transaxle equipped vehicles) (Figure 23).

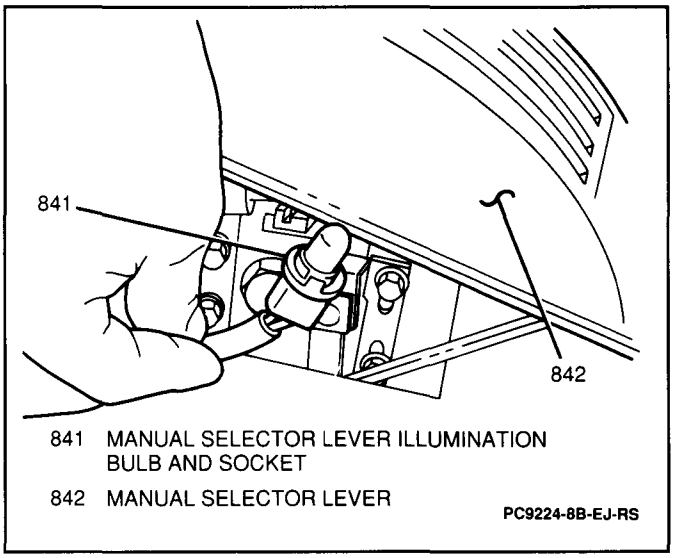

Figure 23 Manual Selector Illumination Bulb

To replace the bulbs, the components must first be removed from the vehicle. For ashtray, cigar lighter, rear wiper/washer switch or rear defogger switch removal and installation procedures, refer to SECTION 8C. For heater control unit removal and installation procedures, refer to SECTION 1A. For manual selector lever removal and installation procedures, refer to SECTION 7A.

For correct bulb applications, refer to the "Bulb Usage Charts" later in this section.

HORN

Figures 7 and 8

Remove or Disconnect

1. Negative (-) battery cable.
2. Two plastic retaining clips securing bottom of front grille to vehicle.
3. One screw from top center of grille.
4. One screw retaining front grille from inside front of each wheelhousing (Figure 7).
5. Pull bottom of front grille out and remove from vehicle (Figure 8).
6. Horn electrical connectors.
7. Mounting bolt and horn from vehicle (Figure 8).

Install or Connect

1. Horn to vehicle; secure with mounting bolt.

   #### Tighten

   - Horn mounting bolt to 10 N·m (89 lb.in.).
2. Horn electrical connectors.
3. Front grille to vehicle; secure with screw to inside of each front wheelhousing.
4. One screw to the top center of the front grille.
5. Two plastic retaining clips to bottom of front grille.
6. Negative (-) battery cable.

   #### Tighten

   - Negative (-) battery cable-to-negative (-) battery terminal retainer to 15 N·m (11 lb.ft.).

Horn Current Adjustment

Figure 24

- Current limit — 4.5 to 5.5 amps at 12 volts.
- Adjustments should be made in 1/4 turn (90 degree) increments.
- Loosen adjusting screw locknut. (Figure 24).

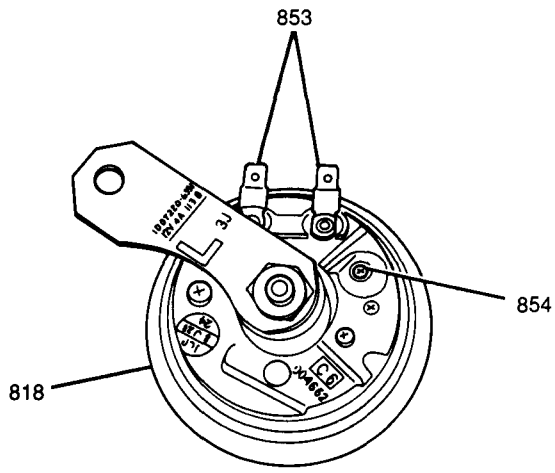

818 HORN
853 HORN ELECTRICAL CONNECTORS
854 LOCKNUT AND ADJUSTING SCREW
NC9225-8B-JT-RS

Figure 24 Horn

- Increase current by rotating adjusting screw counterclockwise.
- Decrease current by rotating adjusting screw clockwise.

Cold Weather Horn Current Adjustment

If the horn fails to sound in cold weather, it is possible that the current limit is set too low, although still within the amperage limit (4.5 to 5.5 amps at 12 volts). Turn the adjusting screw 1/4 turn (90 degrees) counterclockwise to increase current draw until the horn sounds.

NOTICE: This adjustment should not be made unless the horn fails to sound in cold weather. A current increase on a properly functioning horn could result in damage to the horn.

SWITCHES

Refer to SECTION 3F1 (standard column) or SECTION 3F2 (tilt column) for combination switch removal and installation procedures. For the rear windshield wiper/washer switch, rear defogger switch, or illumination controller removal and installation procedures, refer to SECTION 8C. A/C switch removal and installation procedures are found in SECTION 1B.

SPECIFICATIONS

FASTENER TORQUES

Headlamp Assembly Mounting Nut	10 N·m (89 lb.in.)
Headlamp Bracket Mounting Nuts	10 N·m (89 lb.in.)
Horn Mounting Bolt	10 N·m (89 lb.in.)
Negative (-) Battery Cable-to-Negative (-) Battery Terminal Retainer	15 N·m (11 lb.ft.)

SERVICE PARTS INFORMATION

Component Name Used in Section 8B	Reference Name in Service Parts Catalog	Group Number
Combination Switch	Switch Asm, Steering Wheel Combination	2.895
Headlamp Assembly	Headlamp Assembly	2.725
Headlamp Bulb	Bulb	2.727
Daytime Running Lights (DRL) Controller	Controller Asm, Daytime Running Lamps	2.485
Daytime Running Lights (DRL) Resistor	Resistor Asm, Daytime Running Lamps	2.485
Dome Lamp Assembly	Lamp Assembly, Dome	16.494
Front Side Marker	Lamp Asm, Front Side Reflector	2.575
Park/Turn Lamp	Lamp Asm, Turn Signal	2.585
Horn	Horn	2.810
Rear Combination Lamp Assembly	Lamp, Rear Combination	2.679
Rear Side Marker	Lamp, Rear Side Marker	2.575

BULB USAGE CHARTS

EXTERIOR LIGHTING

USE	TRADE NUMBER	GM PART NUMBER	QUANTITY	ART
BACKUP LAMPS	921	9441956	2	
FRONT SIDE MARKER LAMPS	194	9421330	2	
FRONT PARK/TURN LAMPS	1156	96061988	2	
HEADLAMPS	9004	96055351	2	
LICENSE PLATE LAMPS	168	9425542	2	
REAR SIDE MARKER LAMPS	194	9421330	2	
STOP/TAILLAMPS	1157	9428902	2	
REAR TURN SIGNAL LAMPS	1156	96061988	2	

INTERIOR LIGHTING

USE	TRADE NUMBER	GM PART NUMBER	QUANTITY	ART
DOME LAMP	—	96051559	1	

NC9250-8B-JT-RS

INSTRUMENT PANEL CLUSTER INDICATOR LAMPS

USE	TRADE NUMBER	GM PART NUMBER	QUANTITY	ART
INSTRUMENT PANEL CLUSTER ASSEMBLY ILLUMINATION LAMPS	158	96062625	2	
INSTRUMENT PANEL CLUSTER ASSEMBLY INDICATORS	74	9433184	8–14	

INSTRUMENT PANEL COMPONENT ILLUMINATION/INDICATOR LAMPS

USE	TRADE NUMBER	GM PART NUMBER	QUANTITY	ART
ASHTRAY ILLUMINATION LAMP	74	9433184	1	
A/C SWITCH INDICATOR	—	LAMP NOT SERVICED SEPARATELY	—	
CIGAR LIGHTER ILLUMINATION LAMP	74	9433184	1	
HEATER CONTROL UNIT ILLUMINATION LAMP	74	9433184	1	
MANUAL SELECTOR LEVER ILLUMINATION LAMP	—	96057076	1	
RADIO DISPLAY ILLUMINATION LAMPS	—	LAMPS NOT SERVICED SEPARATELY	—	
REAR DEFOGGER SWITCH ILLUMINATION LAMP	—	96061736	—	
REAR DEFOGGER INDICATOR	—	LAMP NOT SERVICED SEPARATELY	—	
REAR WIPER/WASHER SWITCH ILLUMINATION LAMP	—	96061736	2	

PC9251-8B-EJ-RS

SPECIAL TOOLS

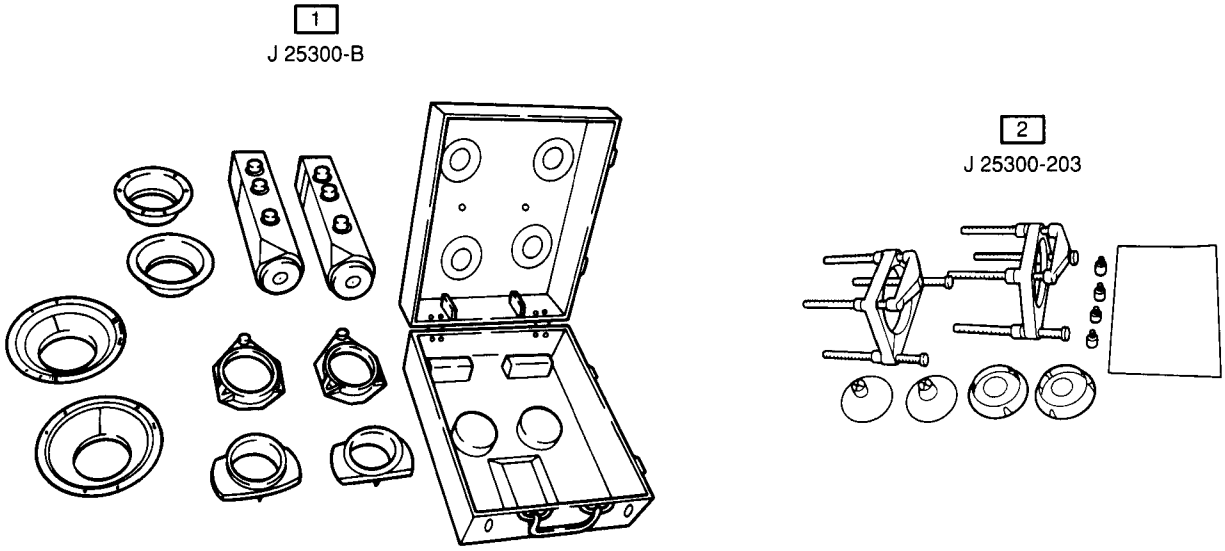

1 HEADLAMP AIMING KIT
2 ADAPTER KIT

NC3328-8B-M-RS

SECTION 8C

INSTRUMENT PANEL, GAGES AND CONSOLE

NOTICE: When fasteners are removed, always reinstall them at the same location from which they were removed. If a fastener needs to be replaced, use the correct part number fastener for that application. If the correct part number fastener is not available, a fastener of equal size and strength (or stronger) may be used. Fasteners that are not reused, and those requiring thread-locking compound, will be called out. The correct torque values must be used when installing fasteners that require them. If the above procedures are not followed, parts or system damage could result.

CONTENTS

General Description 8C-1
Gages 8C-1
Indicators 8C-1
Instrument Panel 8C-1
Speedometer 8C-1
Audio Alarm Module 8C-1
Diagnosis 8C-2
On-Vehicle Service 8C-2
Ashtray 8C-2
Cigar Lighter 8C-2
Console Box 8C-3
Glove Box 8C-3
Glove Box Lock Assembly 8C-3
Glove Box Lock Striker 8C-3
Heater Control Garnish 8C-3
Instrument Panel 8C-4
Instrument Panel Center Trim Bezel 8C-6
Instrument Panel Cluster Assembly 8C-6
Instrument Panel Cluster Assembly Lens ... 8C-6
Instrument Panel Cluster Printed Circuit 8C-7
Instrument Panel Cluster Gages (With Tachometer) 8C-9
Instrument Panel Cluster Gages (Without Tachometer) 8C-10
Instrument Panel Cluster Bezel 8C-12
Instrument Panel Handle 8C-12
Illumination Controller 8C-12
Instrument Panel Switches 8C-13
Rear Defogger Switch — Hardtop Models 8C-13
Rear Wiper/Washer Switch — Hardtop Models 8C-13
Lower Steering Column Cover Panel 8C-13
Parking Brake Lever Bezel 8C-13
Speedometer Cable 8C-13
Turn/Hazard Relay 8C-14
Audio Alarm Module 8C-14
Specifications 8C-15
Fastener Torques 8C-15
Service Parts Information 8C-15

GENERAL DESCRIPTION

GAGES

The instrument panel gages include a speedometer/odometer, a tachometer (if equipped), a fuel gage and an engine coolant temperature (ECT) gage. The gages are located in the instrument panel cluster assembly. Refer to the appropriate procedures later in this section for removal and installation procedures.

INDICATORS

The instrument panel cluster assembly includes the following indicators: oil pressure, daytime running lamps (DRL, if equipped), charging system, turn signals, malfunction indicator lamp (MIL) ("CHECK ENGINE"), "4WD" (if equipped), high-beam, "BRAKE" and fasten seat belt indicators.

INSTRUMENT PANEL

The instrument panel assembly mounts to the support member and along the base of the windshield opening. The instrument panel assembly is the attaching base for the glove box, instrument panel cluster assembly, instrument panel handle and the front speakers. For appearance, the instrument panel covers the routing of major assemblies, such as the heating and air conditioning ducts, electrical components and wiring harnesses.

SPEEDOMETER

Important

- When replacing a speedometer or odometer assembly, the law requires the odometer reading of the replacement unit to be set to register the same mileage as the prior odometer. If the same mileage cannot be set, the law requires that the replacement odometer be set to zero (0) and a label be installed on the driver's door frame to show the previous odometer reading and date of replacement.

AUDIO ALARM MODULE

Refer to SECTION 8A for circuit operation and system diagnosis of the audio alarm module. The audio alarm module is located behind the instrument panel above the right front speaker.

DIAGNOSIS

Refer to SECTION 8A for all electrical diagnosis.

ON-VEHICLE SERVICE

ASHTRAY

Figure 1

Remove or Disconnect

1. Negative (-) battery cable.
- Ashtray from guide by depressing spring-loaded tab and pulling ashtray out from the guide.
2. Two screws and ashtray guide from instrument panel (Figure 1).
3. Ashtray illumination lamp from guide.

Install or Connect

1. Illumination lamp to guide.
2. Ashtray guide to instrument panel; secure with two screws.
- Slide ashtray into guide.
3. Negative (-) battery cable.

Tighten

- Negative (-) battery cable-to-negative (-) battery terminal retainer to 15 N·m (11 lb.ft.).

CIGAR LIGHTER

Figures 1 and 2

Remove or Disconnect

1. Negative (-) battery cable.
2. One screw and glove box from instrument panel (Figure 2).
3. Illumination lamp bulb socket from cigar lighter (Figure 1).

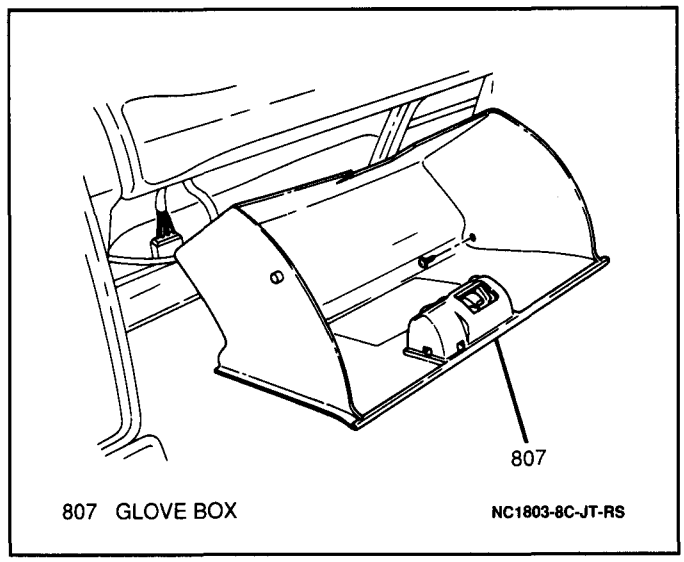

Figure 2 Glove Box

4. Cigar lighter electrical connector.
- Unscrew retainer from rear of cigar lighter (Figure 1).
5. Cigar lighter from instrument panel.

Install or Connect

1. Cigar lighter to instrument panel; secure with one retainer.
2. Electrical connector to cigar lighter.
3. Illumination lamp bulb socket to cigar lighter.
4. Glove box to instrument panel; secure with one screw.
5. Negative (-) battery cable.

Tighten

- Negative (-) battery cable-to-negative (-) battery terminal retainer to 15 N·m (11 lb.ft.).

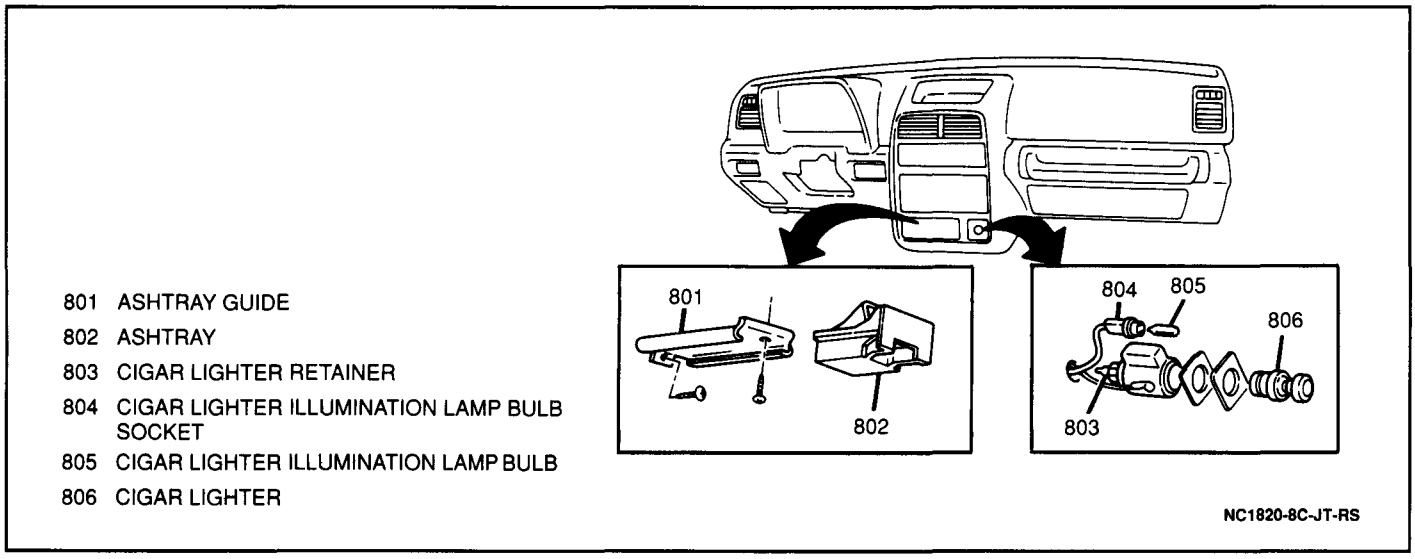

Figure 1 Ashtray and Cigar Lighter Assembly

CONSOLE BOX

Figure 3

Remove or Disconnect

1. Two front screws from console box (Figure 3).
2. Two plastic retaining clips from rear of console box (Figure 3).
- Lift console box out of vehicle.

Install or Connect

- Console box to vehicle; secure with two screws and two plastic retaining clips.

GLOVE BOX

Figure 2

Remove or Disconnect

- One screw and glove box from instrument panel (Figure 2).

Install or Connect

- Glove box to instrument panel; secure with one screw.

Glove Box Lock Assembly

Remove or Disconnect

1. One screw and glove box from instrument panel.
2. Gently pry lock cylinder bezel from glove box door.
3. Two screws and lock assembly from glove box door.

Install or Connect

1. Lock assembly to glove box door; secure with two screws.
- Snap lock cylinder bezel to glove box door.
2. Glove box to instrument panel; secure with one screw.

Glove Box Lock Striker

Remove or Disconnect

- Two screws and glove box lock striker from instrument panel.

Install or Connect

- Glove box lock striker to instrument panel; secure with two screws.

HEATER CONTROL GARNISH

Figure 4

Remove or Disconnect

1. Negative (-) battery cable.
2. Four control knobs from heater control unit.
- Pull heater control garnish from instrument panel (Figure 4).
3. Heater control illumination lamp from garnish (Figure 4).

Install or Connect

1. Illumination lamp to heater control garnish.
- Press heater control garnish into position on instrument panel.
2. Four control knobs to heater control unit.
3. Negative (-) battery cable.

Tighten

- Negative (-) battery cable-to-negative (-) battery terminal retainer to 15 N·m (11 lb.ft.).

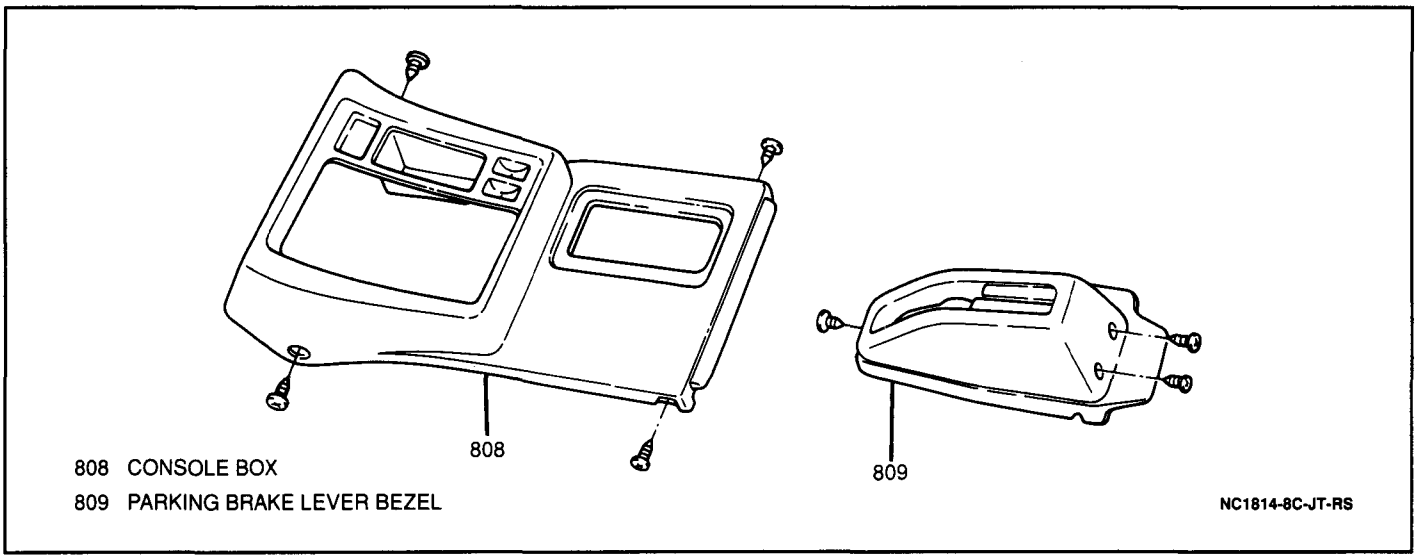

Figure 3 Console Box

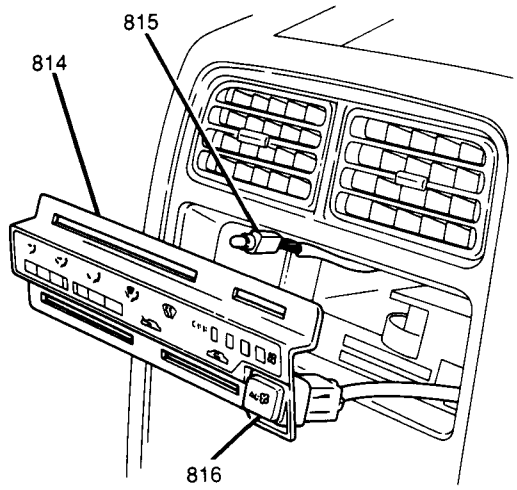

814 HEATER CONTROL GARNISH
815 HEATER CONTROL ILLUMINATION LAMP
816 A/C SWITCH NC1804-8C-JT-RS

Figure 4 Heater Control Garnish

INSTRUMENT PANEL

Figures 2 and 4 through 9

Remove or Disconnect

1. Negative (-) battery cable.
2. Lower steering column cover panel.
3. Steering wheel. Refer to SECTION 3F1 (standard column) or SECTION 3F2 (tilt column).
4. Six screws from steering column lower cover and remove upper and lower covers (Figure 5).

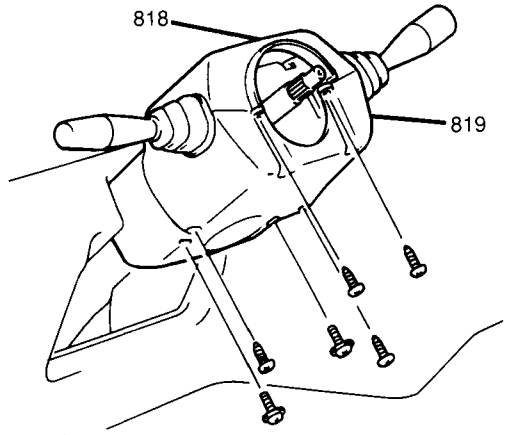

818 UPPER STEERING COLUMN COVER
819 LOWER STEERING COLUMN COVER NC1800-8C-JT-RS

Figure 5 Steering Column Upper and Lower Covers

5. Combination switch electrical connector.
6. Retaining bands securing combination switch connector wires to steering column.
7. Four screws and combination switch from steering column (Figure 6).

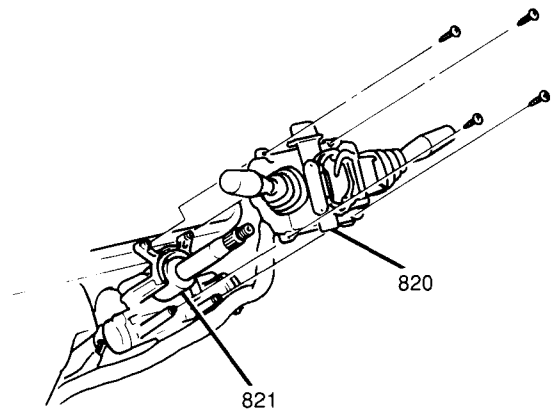

820 COMBINATION SWITCH
821 STEERING COLUMN NC1801-8C-JT-RS

Figure 6 Combination Switch Removal

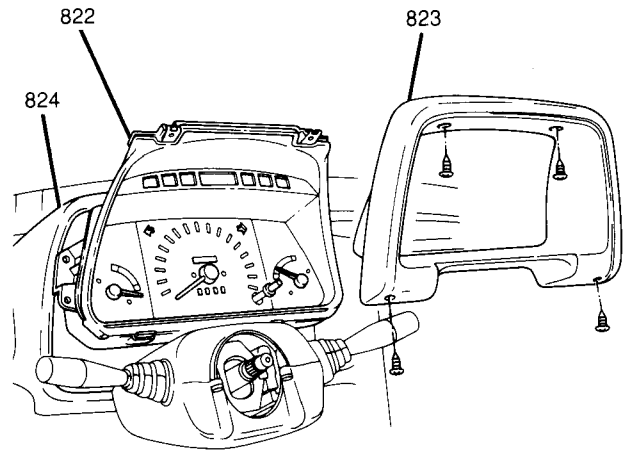

822 INSTRUMENT PANEL CLUSTER ASSEMBLY
823 INSTRUMENT PANEL CLUSTER BEZEL
824 INSTRUMENT PANEL NC1802-8C-JT-RS

Figure 7 Instrument Panel Cluster Assembly

8. Four screws and instrument panel cluster bezel from vehicle (Figure 7).
9. Four screws and instrument cluster assembly from instrument panel (Figure 7).
10. Three electrical connectors and speedometer cable from cluster assembly.
11. Three screw covers and three screws along top of instrument panel.
12. Three screws on bottom right side of instrument panel.
13. Three screws on bottom left side of instrument panel.
14. One screw and glove box from instrument panel (Figure 2).

15. A/C switch electrical connector from behind instrument panel (Figure 4).
16. Four control knobs from heater control unit.
- Pull heater control garnish from instrument panel (Figure 4).

17. Heater control illumination lamp from garnish.
18. Ashtray from guide by depressing spring-loaded tab and pulling ashtray out from the guide.
19. Two screws and ashtray guide from instrument panel.
20. Illumination lamp from ashtray guide.
21. Four screws and instrument panel center trim bezel from instrument panel (Figure 8).

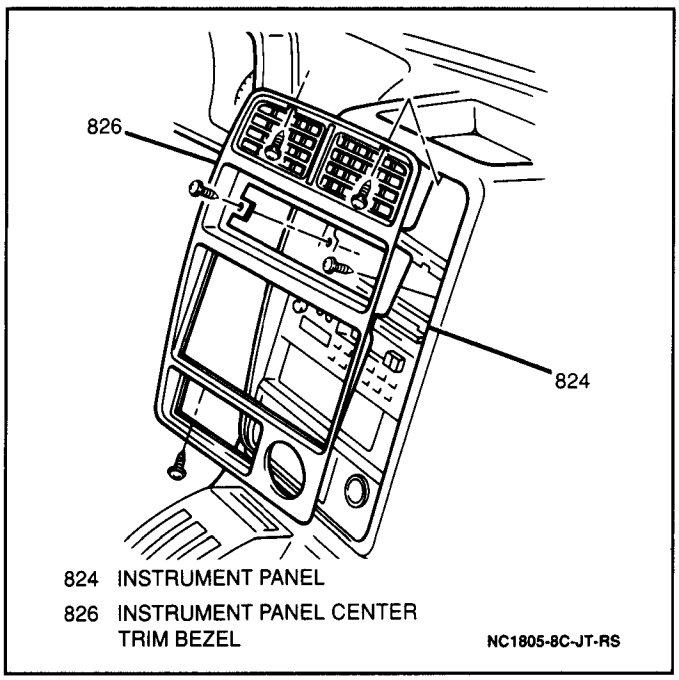

Figure 8 Instrument Panel Center Trim Bezel

22. Two mounting nuts and instrument panel handle from instrument panel (Figure 9).

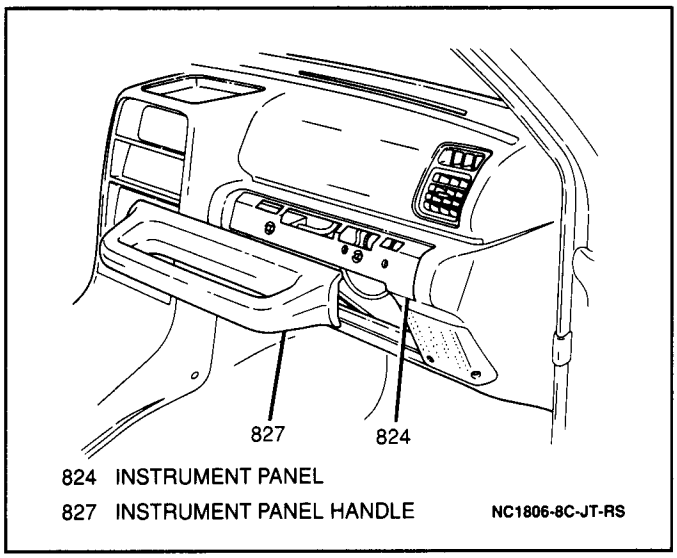

Figure 9 Instrument Panel Handle

23. Four electrical connectors.
24. Radio antenna lead from radio.
- Pull instrument panel from support member.

25. Detach the instrument panel and defroster ducts from the center and side instrument panel outlets.
26. Instrument panel from vehicle.

Install or Connect

- Attach instrument panel and defroster ducts to the center and side instrument panel outlets.

1. Instrument panel to support member.
2. Radio antenna lead to radio.
3. Four electrical connectors.
4. Instrument panel handle to instrument panel; secure with two mounting nuts.

Tighten

- Instrument panel handle-to-instrument panel mounting nuts to 20 N·m (15 lb.ft.).

5. Instrument panel center trim bezel to instrument panel; secure with four screws.
6. Illumination lamp to ashtray guide.
7. Ashtray guide to instrument panel; secure with two screws.
- Slide ashtray into guide.

8. Illumination lamp to heater control garnish.
- Press heater control garnish into position.

9. Four control knobs to heater control unit.
10. A/C switch electrical connector.
11. Glove box to instrument panel; secure with one screw.
12. Three screws on the bottom left side of instrument panel.
13. Three screws on the bottom right side of instrument panel.
14. Three screws and screw covers along the top of instrument panel.
15. Three electrical connectors and speedometer cable to instrument panel cluster assembly.
16. Cluster assembly to instrument panel; secure with four screws.
17. Cluster bezel to vehicle; secure with four screws.
18. Combination switch to steering column; secure with four screws.
19. Combination switch electrical connector.
- Secure combination switch wiring to steering column with retaining bands.

20. Upper and lower steering column covers; secure with six screws.
21. Lower steering column cover panel.
22. Steering wheel. Refer to SECTION 3F1 (standard column) or SECTION 3F2 (tilt column).
23. Negative (-) battery cable.

Tighten

- Negative (-) battery cable-to-negative (-) battery terminal retainer to 15 N·m (11 lb.ft.).

INSTRUMENT PANEL CENTER TRIM BEZEL

Figures 4 and 8

Remove or Disconnect

1. Negative (-) battery cable.
2. Four control knobs from heater control unit.
- Pull heater control garnish from instrument panel (Figure 4).
3. Heater control illumination lamp from garnish (Figure 4).
4. Ashtray from guide by depressing spring-loaded tab and pulling ashtray rearward.
5. Five screws and instrument panel center trim bezel from instrument panel (Figure 8).

Install or Connect

1. Instrument panel center trim bezel to instrument panel; secure with five screws.
- Slide ashtray into guide.
2. Illumination lamp to heater control garnish.
- Press heater control garnish into position.
3. Four knobs to heater control unit.
4. Negative (-) battery cable.

Tighten

- Negative (-) battery cable-to-negative (-) battery terminal retainer to 15 N·m (11 lb.ft.).

INSTRUMENT PANEL CLUSTER ASSEMBLY

Figure 7

Remove or Disconnect

1. Negative (-) battery cable.
2. Four screws and instrument panel cluster bezel from vehicle (Figure 7).
3. Four screws and instrument cluster assembly from instrument panel (Figure 7).
4. Three electrical connectors and speedometer cable from instrument panel cluster assembly.

Install or Connect

1. Three electrical connectors and speedometer cable to instrument panel cluster assembly.
2. Cluster assembly to instrument panel; secure with four screws.
3. Cluster bezel to vehicle; secure with four screws.
4. Negative (-) battery cable.

Tighten

- Negative (-) battery cable-to-negative (-) battery terminal retainer to 15 N·m (11 lb.ft.).

Instrument Panel Cluster Assembly Lens

Figures 7 and 10

Remove or Disconnect

1. Negative (-) battery cable.
2. Four screws and instrument panel cluster bezel from vehicle (Figure 7).
3. Four screws and instrument panel cluster assembly from instrument panel (Figure 7).
4. Three electrical connectors and speedometer cable from instrument panel cluster assembly.
- Unclip cluster assembly lens from cluster housing (Figure 10).

Install or Connect

- Clip instrument panel cluster assembly lens onto cluster housing.
1. Three electrical connectors and speedometer cable to cluster assembly.
2. Cluster assembly to instrument panel; secure with four screws.
3. Cluster bezel to vehicle; secure with four screws.
4. Negative (-) battery cable.

Tighten

- Negative (-) battery cable-to-negative (-) battery terminal retainer to 15 N·m (11 lb.ft.).

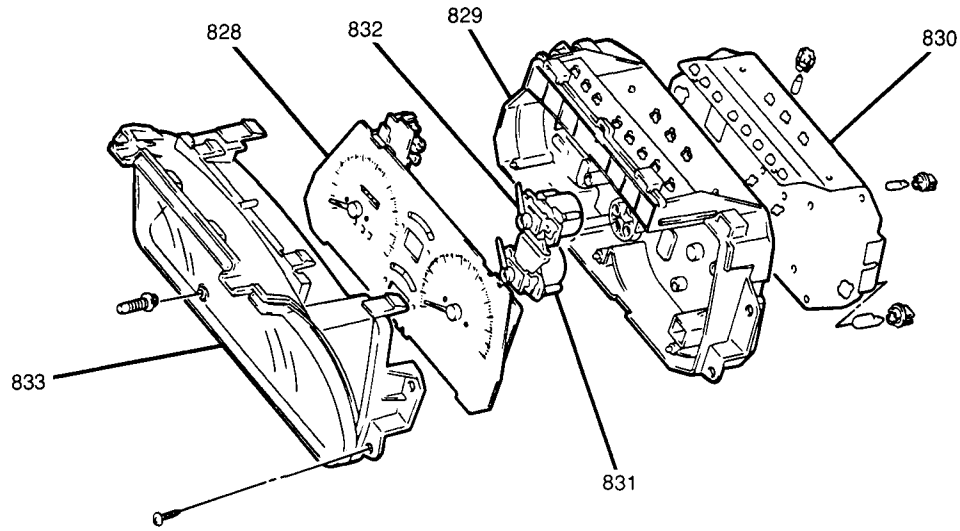

828 INSTRUMENT PANEL CLUSTER FACE
829 INSTRUMENT PANEL CLUSTER HOUSING
830 INSTRUMENT PANEL CLUSTER PRINTED CIRCUIT
831 FUEL GAGE
832 ENGINE COOLANT TEMPERATURE (ECT) GAGE
833 INSTRUMENT PANEL CLUSTER ASSEMBLY LENS

PC0080-8C-EJ-RS

Figure 10 Cluster Assembly — With Tachometer

Instrument Panel Cluster Printed Circuit

Figures 7, 11 and 12

Remove or Disconnect

1. Negative (-) battery cable.
2. Four screws and instrument panel cluster bezel from vehicle (Figure 7).
3. Four screws and instrument panel cluster assembly from instrument panel (Figure 7).
4. Three electrical connectors and speedometer cable from instrument panel cluster assembly.
5. All bulb sockets from rear of cluster assembly.
6. All screws from rear of cluster assembly.
7. Instrument panel cluster printed circuit from cluster assembly.

Install or Connect

1. Instrument panel cluster printed circuit to cluster assembly; secure with screws.
2. All bulb sockets to rear of cluster assembly (Figure 11, with tachometer; Figure 12, without tachometer).
3. Three electrical connectors and speedometer cable to instrument panel cluster assembly.
4. Cluster assembly to instrument panel; secure with four screws.
5. Cluster bezel to vehicle; secure with four screws.
6. Negative (-) battery cable.

Tighten

- Negative (-) battery cable-to-negative (-) battery terminal retainer to 15 N·m (11 lb. ft.).

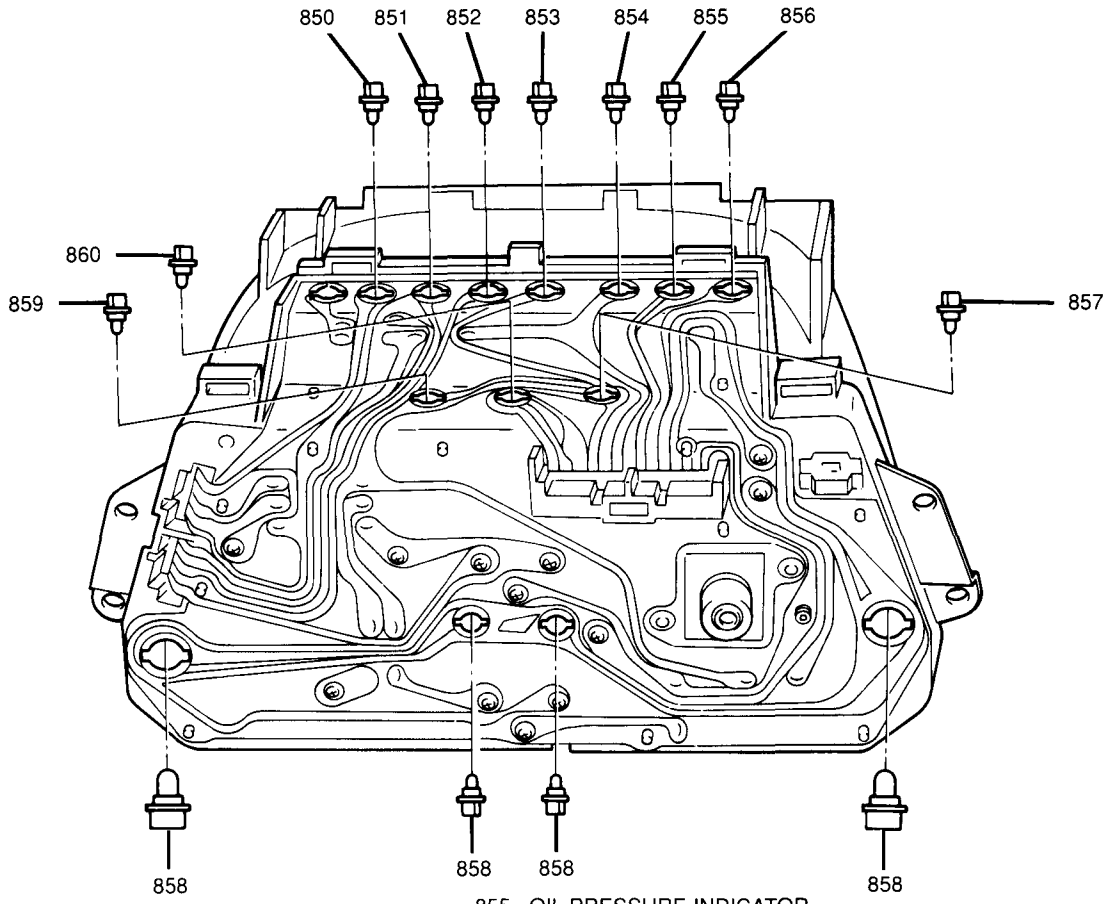

850 SEAT BELT INDICATOR

851 CHARGE INDICATOR

852 DAYTIME RUNNING LIGHTS (DRL) INDICATOR (CANADA ONLY)

853 "4WD" INDICATOR

854 "BRAKE" INDICATOR

855 OIL PRESSURE INDICATOR

856 MALFUNCTION INDICATOR LAMP (MIL) ("CHECK ENGINE")

857 LH TURN INDICATOR

858 ILLUMINATION LAMP

859 RH TURN INDICATOR

860 HIGH-BEAM INDICATOR

PC0085-8C-EJ-RS

Figure 11 Instrument Panel Cluster Bulb Location — With Tachometer

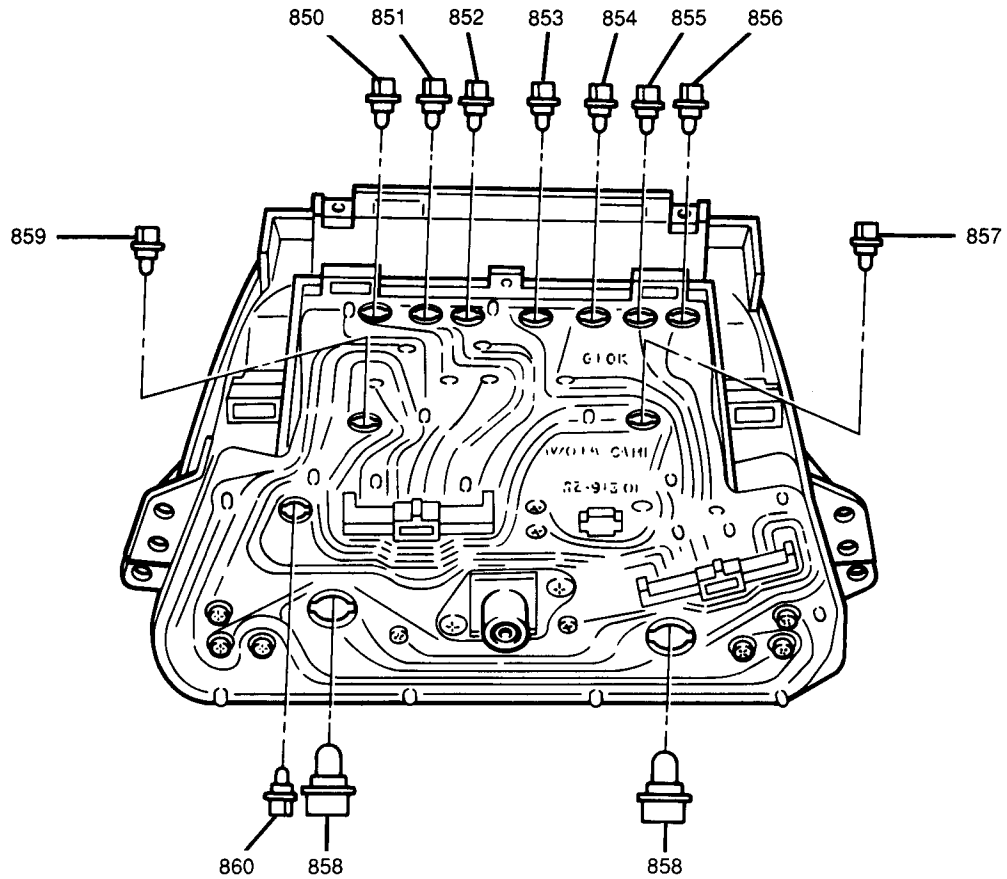

850 SEAT BELT INDICATOR
851 CHARGE INDICATOR
852 DAYTIME RUNNING LIGHTS (DRL) INDICATOR (CANADA ONLY)
853 "4WD" INDICATOR (WITH AUTOMATIC TRANSMISSION, CANADA ONLY)
854 "BRAKE" INDICATOR
855 OIL PRESSURE INDICATOR
856 MALFUNCTION INDICATOR LAMP (MIL) ("CHECK ENGINE")
857 LH TURN INDICATOR
858 ILLUMINATION LAMP
859 RH TURN INDICATOR
860 HIGH-BEAM INDICATOR

PC0086-8C-EJ-RS

Figure 12 Instrument Panel Cluster Bulb Location — Without Tachometer

Instrument Panel Cluster Gages (With Tachometer)

Fuel Gage

Figures 10 and 13

Remove or Disconnect

1. Negative (-) battery cable.
2. Instrument panel cluster assembly, refer to "Instrument Panel Cluster Assembly" earlier in this section.
- Unclip cluster assembly lens from cluster housing (Figure 10).
3. Fifteen screws from back of cluster housing (Figure 13).
- Slide cluster face with gages from cluster housing (Figure 10).
4. Two screws securing fuel gage to cluster face (Figure 10).

Install or Connect

1. Fuel gage to cluster face; secure with two screws.
- Slide cluster face into cluster housing; secure with fifteen screws.
- Clip cluster assembly lens onto cluster housing.
2. Instrument panel cluster assembly, refer to "Instrument Panel Cluster Assembly" earlier in this section.
3. Negative (-) battery cable.

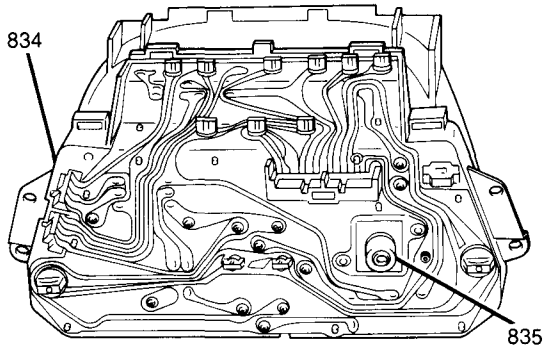

834 INSTRUMENT PANEL CLUSTER ASSEMBLY — WITH TACHOMETER

835 SPEEDOMETER NC1808-8C-JT-RS

Figure 13 Rear of Cluster Assembly — With Tachometer

Tighten

- Negative (-) battery cable-to-negative (-) battery terminal retainer to 15 N·m (11 lb.ft.).

Speedometer and Tachometer Assembly

Figures 10 and 13

The cluster face, speedometer, odometer, trip odometer and tachometer are serviced as one unit.

Important

- When replacing a speedometer or odometer assembly, the law requires the odometer reading of the replacement unit to be set to register the same mileage as the prior odometer. If the same mileage cannot be set, the law requires that the replacement odometer be set to zero (0) and a label be installed on the driver's door frame to show the previous odometer reading and date of replacement.

Remove or Disconnect

1. Negative (-) battery cable.
2. Instrument panel cluster assembly, refer to "Instrument Panel Cluster Assembly" earlier in this section.
- Unclip cluster assembly lens from cluster housing (Figure 10).
3. Fifteen screws from back of cluster housing (Figure 13).
- Slide cluster face with gages from cluster housing (Figure 10).
4. Two screws securing fuel gage to cluster face (Figure 13).
5. Two screws securing engine coolant temperature (ECT) gage to cluster face (Figure 10).

Install or Connect

1. ECT gage to cluster face; secure with two screws.
2. Fuel gage to cluster face; secure with two screws.
- Slide cluster face into cluster housing; secure with fifteen screws.
- Clip cluster assembly lens onto cluster housing.
3. Instrument panel cluster assembly, refer to "Instrument Panel Cluster Assembly" earlier in this section.
4. Negative (-) battery cable.

Tighten

- Negative (-) battery cable-to-negative (-) battery terminal retainer to 15 N·m (11 lb.ft.).

Engine Coolant Temperature (ECT) Gage

Figures 10 and 13

Remove or Disconnect

1. Negative (-) battery cable.
2. Instrument panel cluster assembly, refer to "Instrument Panel Cluster Assembly" earlier in this section.
- Unclip cluster assembly lens from cluster housing (Figure 10).
3. Fifteen screws from back of cluster housing (Figure 13).
- Slide cluster face with gages from cluster housing (Figure 10).
4. Two screws securing ECT gage to cluster face (Figure 13).

Install or Connect

1. ECT gage to cluster face; secure with two screws.
- Slide cluster face with gages into cluster housing; secure with fifteen screws.
- Clip cluster assembly lens onto cluster housing.
2. Instrument panel cluster assembly, refer to "Instrument Panel Cluster Assembly" earlier in this section.
3. Negative (-) battery cable.

Tighten

- Negative (-) battery cable-to-negative (-) battery terminal retainer to 15 N·m (11 lb.ft.).

Instrument Panel Cluster Gages (Without Tachometer)

Fuel Gage

Figures 14 and 15

Remove or Disconnect

1. Negative (-) battery cable.
2. Instrument panel cluster assembly, refer to "Instrument Panel Cluster Assembly" earlier in this section.
- Unclip cluster assembly lens from cluster housing (Figure 14).
3. Six screws and speedometer assembly from cluster housing (Figure 15).
4. Three retaining screws and fuel gage from cluster housing (Figure 15).

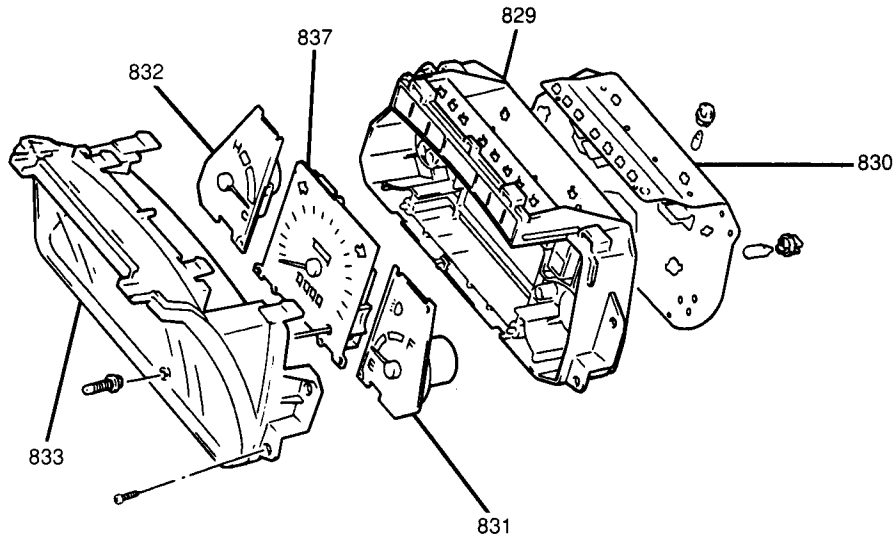

829 INSTRUMENT PANEL CLUSTER HOUSING
830 INSTRUMENT PANEL CLUSTER PRINTED CIRCUIT
831 FUEL GAGE
832 ENGINE COOLANT TEMPERATURE (ECT) GAGE
833 INSTRUMENT PANEL CLUSTER ASSEMBLY LENS
837 SPEEDOMETER ASSEMBLY

PC0081-8C-EJ-RS

Figure 14 Cluster Assembly — Without Tachometer

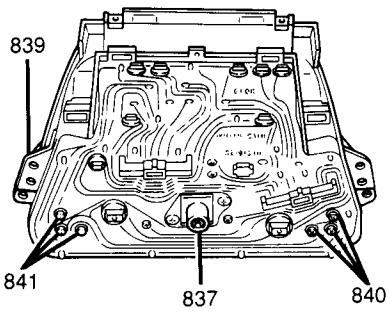

837 SPEEDOMETER ASSEMBLY
839 INSTRUMENT PANEL CLUSTER ASSEMBLY — WITHOUT TACHOMETER
840 ENGINE COOLANT TEMPERATURE (ECT) GAGE RETAINING SCREWS
841 FUEL GAGE RETAINING SCREWS

PC1810-8C-EJ-RS

Figure 15 Rear of Cluster Assembly — Without Tachometer

Install or Connect

1. Fuel gage to cluster housing; secure with three screws.
2. Speedometer assembly to cluster housing; secure with six screws.
- Clip cluster assembly lens onto cluster housing.
3. Instrument panel cluster assembly, refer to "Instrument Panel Cluster Assembly" earlier in this section.
4. Negative (-) battery cable.

Tighten

- Negative (-) battery cable-to-negative (-) battery terminal retainer to 15 N·m (11 lb.ft.).

Speedometer Assembly

Figures 14 and 15

The speedometer and the odometer are serviced as one unit.

Important

- When replacing a speedometer or odometer assembly, the law requires the odometer reading of the replacement unit to be set to register the same mileage as the prior odometer. If the same mileage cannot be set, the law requires that the replacement odometer be set to zero (0) and a label be installed on the driver's door frame to show the previous odometer reading and date of replacement.

Remove or Disconnect

1. Negative (-) battery cable.
2. Instrument panel cluster assembly, refer to "Instrument Panel Cluster Assembly" earlier in this section.
- Unclip cluster assembly lens from cluster housing (Figure 14).
3. Six screws securing speedometer assembly to cluster housing (Figure 15).
4. Speedometer assembly from cluster housing (Figure 14).

Install or Connect

1. Speedometer assembly to cluster housing; secure with six screws.
- Clip cluster assembly lens onto cluster housing.
2. Instrument panel cluster assembly, refer to "Instrument Panel Cluster Assembly" earlier in this section.
3. Negative (-) battery cable.

Tighten

- Negative (-) battery cable-to-negative (-) battery terminal retainer to 15 N·m (11 lb.ft.).

Engine Coolant Temperature (ECT) Gage

Figures 14 and 15

Remove or Disconnect

1. Negative (-) battery cable.
2. Instrument panel cluster assembly, refer to "Instrument Panel Cluster Assembly" earlier in this section.
- Unclip cluster assembly lens from cluster housing (Figure 14).
3. Six screws and speedometer from cluster housing (Figure 15).
4. Three screws and ECT gage from cluster housing (Figure 15).

Install or Connect

1. ECT gage to cluster housing; secure with three screws.
2. Speedometer to cluster housing; secure with six screws.
- Clip cluster assembly lens onto cluster housing.
3. Instrument panel cluster assembly, refer to "Instrument Panel Cluster Assembly" earlier in this section.
4. Negative (-) battery cable.

Tighten

- Negative (-) battery cable-to-negative (-) battery terminal retainer to 15 N·m (11 lb.ft.).

INSTRUMENT PANEL CLUSTER BEZEL

Figure 7

Remove or Disconnect

1. Negative (-) battery cable.
2. Four screws and instrument panel cluster bezel from vehicle (Figure 7).

Install or Connect

1. Instrument panel cluster bezel to vehicle; secure with four screws.
2. Negative (-) battery cable.

Tighten

- Negative (-) battery cable-to-negative (-) battery terminal retainer to 15 N·m (11 lb.ft.).

INSTRUMENT PANEL HANDLE

Figures 2 and 9

Remove or Disconnect

1. One screw and glove box from instrument panel (Figure 2).
2. Two mounting nuts and instrument panel handle from instrument panel (Figure 9).

Install or Connect

1. Instrument panel handle to instrument panel; secure with two mounting nuts.

Tighten

- Instrument panel handle-to-instrument panel mounting nuts to 20 N·m (15 lb.ft.).

2. Glove box to instrument panel; secure with one screw.

ILLUMINATION CONTROLLER

Figure 16

Remove or Disconnect

1. Negative (-) battery cable.
- Gently pry off lower steering column cover panel from instrument panel.
2. Electrical connector from illumination controller.
3. Adjusting knob from illumination controller (Figure 16).

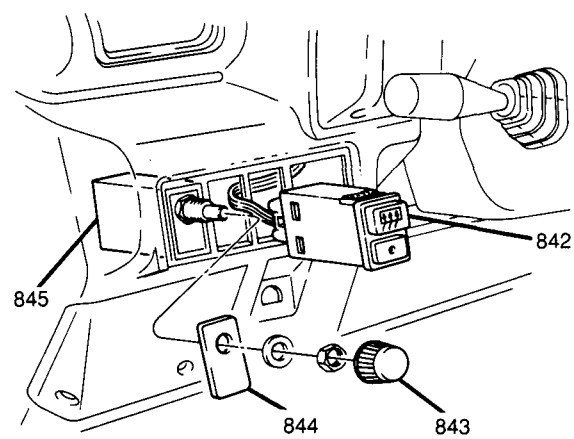

842 REAR DEFOGGER SWITCH — HARDTOP MODELS
843 ILLUMINATION CONTROLLER ADJUSTING KNOBS
844 ILLUMINATION CONTROLLER FACEPLATE
845 ILLUMINATION CONTROLLER NC1811-8C-JT-RS

Figure 16 Illumination Controller and Rear Defogger Switch

4. One nut securing illumination controller to instrument panel (Figure 16).
5. Washer and face plate from illumination controller (Figure 16).
- Slide illumination controller out from rear of instrument panel.

Install or Connect

- Slide illumination controller into place through rear of instrument panel.
1. Washer and face plate to illumination controller; secure with one nut.
2. Adjusting knob to illumination controller.
3. Electrical connector to illumination controller.
- Press lower steering column cover panel onto instrument panel.
4. Negative (-) battery cable.

Tighten

- Negative (-) battery cable-to-negative (-) battery terminal retainer to 15 N·m (11 lb.ft.).

INSTRUMENT PANEL SWITCHES

Rear Defogger Switch — Hardtop Models

Figure 16

Remove or Disconnect

1. Negative (-) battery cable.
- Gently pry off lower steering column cover panel from instrument panel.
2. Electrical connector from rear defogger switch.
3. Rear defogger switch from instrument panel (Figure 16).

Install or Connect

1. Rear defogger switch to instrument panel.
2. Electrical connector to switch.
- Press lower steering column cover panel to instrument panel.
3. Negative (-) battery cable.

Tighten

- Negative (-) battery cable-to-negative (-) battery terminal retainer to 15 N·m (11 lb.ft.).

Rear Wiper/Washer Switch — Hardtop Models

Remove or Disconnect

1. Negative (-) battery cable.
- Gently pry off lower steering column cover panel from instrument panel.
2. Electrical connector from rear wiper/washer switch.
3. Rear wiper/washer switch from instrument panel.

Install or Connect

1. Rear wiper/washer switch to instrument panel.
2. Electrical connector to rear wiper/washer switch.
- Press lower steering column cover panel to instrument panel.
3. Negative (-) battery cable.

Tighten

- Negative (-) battery cable-to-negative (-) battery terminal retainer to 15 N·m (11 lb.ft.).

LOWER STEERING COLUMN COVER PANEL

Remove or Disconnect

- Gently pry off lower steering column cover panel from instrument panel.

Install or Connect

- Press lower steering column cover panel onto instrument panel.

PARKING BRAKE LEVER BEZEL

Figure 3

Remove or Disconnect

1. One front plastic retaining clip from parking brake lever bezel (Figure 3).
2. Two rear screws and bezel from vehicle (Figure 15).

Install or Connect

- Parking brake lever bezel to vehicle; secure with two screws and one plastic retaining clip.

SPEEDOMETER CABLE

Figure 17

Remove or Disconnect

1. Negative (-) battery cable.
2. Instrument panel cluster assembly. Refer to "Instrument Panel Cluster Assembly" earlier in this section.
- Unhook speedometer cable from heater core housing.
3. Grommet from bulkhead and feed speedometer cable through bulkhead.
- Raise and suitably support vehicle. Refer to SECTION 0A.
- Unscrew and remove the speedometer cable from the transfer case (four-wheel drive vehicles) (Figure 17).

- Raise and suitably support vehicle. Refer to SECTION 0A.
- Unscrew and remove the speedometer cable from the transfer case (four-wheel drive vehicles) (Figure 17).

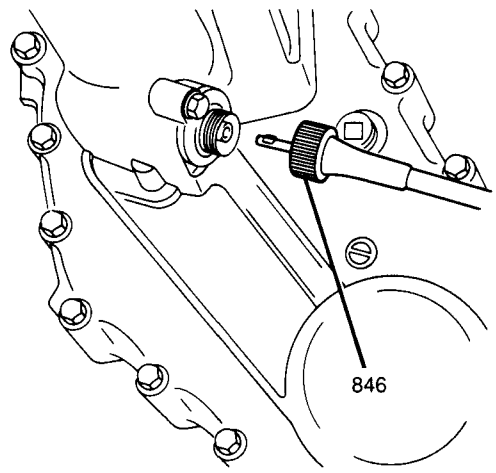

846 SPEEDOMETER CABLE NC1822-8C-JT-RS

Figure 17 Speedometer Cable Attachment Location — Typical

- Unscrew and remove the speedometer cable from the transmission (two-wheel drive vehicles) (Figure 15).

4. Speedometer cable from clamp.
5. Speedometer cable from vehicle.

Install or Connect

1. Speedometer cable to clamp.
2. Speedometer cable to transmission, screw on to secure (two-wheel drive vehicles) (Figure 17).
3. Speedometer cable to transfer case, screw on to secure (four-wheel drive vehicles) (Figure 17).
- Lower vehicle.
- Feed speedometer cable through bulkhead.

4. Grommet to bulkhead.
- Hook speedometer cable to heater core housing.

5. Instrument panel cluster assembly. Refer to "Instrument Panel Cluster Assembly" earlier in this section.
6. Negative (-) battery cable.

Tighten

- Negative (-) battery cable-to-negative (-) battery terminal retainer to 15 N·m (11 lb.ft.).

TURN/HAZARD RELAY

The turn/hazard relay mounting bracket is attached to the engine control module (ECM) mounting bracket under the left side of the instrument panel.

Remove or Disconnect

1. Two screws and lower fuse block.
2. Two bolts securing turn/hazard relay mounting bracket to ECM mounting bracket.
3. Turn/hazard relay electrical connector.
- Slide turn/hazard relay off mounting bracket.

Install or Connect

- Slide the turn/hazard relay onto the mounting bracket.

1. Turn/hazard relay electrical connector.
2. Turn/hazard relay mounting bracket to ECM mounting bracket; secure with two bolts.

Tighten

- Turn/hazard relay mounting bracket-to-ECM mounting bracket bolts to 10 N·m (89 lb.in.).

3. Fuse block into position; secure with two screws.

AUDIO ALARM MODULE

Figures 2 and 18

Remove or Disconnect

1. Negative (-) battery cable.
2. Two screws and right-front speaker cover from instrument panel.
3. Two screws and speaker from instrument panel (if equipped).
4. One screw and glove box (Figure 2).
- The audio alarm module is mounted to the inside of the instrument panel above the right-front speaker.

5. Electrical connector from audio alarm module (Figure 18).
6. One screw and audio alarm module from instrument panel (Figure 18).

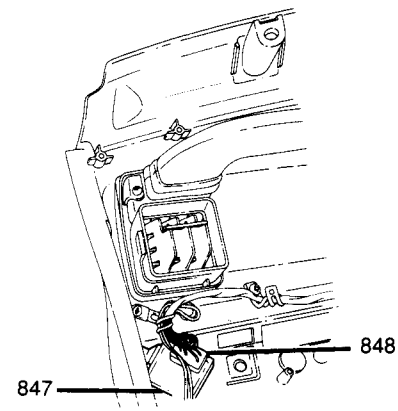

847 AUDIO ALARM MODULE
848 AUDIO ALARM MODULE ELECTRICAL CONNECTOR
NC1821-8C-JT-RS

Figure 18 Audio Alarm Module Location

Install or Connect

1. Audio alarm module to instrument panel; secure with one screw (Figure 18).
2. Electrical connector to audio alarm module (Figure 18).
3. Glove box; secure with one screw (Figure 2).
4. Right-front speaker; secure with two screws (if equipped).
5. Speaker cover to instrument panel; secure with two screws.
6. Negative (-) battery cable.

Tighten

- Negative (-) battery cable-to-negative (-) battery terminal retainer to 15 N·m (11 lb.ft.).

SPECIFICATIONS

FASTENER TORQUES

Negative (-) Battery Cable-to-Negative (-) Battery Terminal Retainer	15 N·m (11 lb.ft.)
Instrument Panel Handle-to-Instrument Panel Mounting Nuts	20 N·m (15 lb.ft.)
Turn/Hazard Relay Mounting Bracket-to-ECM Mounting Bracket Bolts	10 N·m (89 lb.in.)

SERVICE PARTS INFORMATION

Component Name Used in Section 8C	Reference Name in Service Parts Catalog	Group Number
Instrument Panel	Instrument Panel	16.080
Instrument Panel Cluster Housing	Instrument Panel Speedometer Case	9.743
Instrument Panel Cluster Bezel	Instrument Panel Meter Cluster Hood	9.743
Instrument Panel Cluster Assembly Lens	Instrument Cluster Glass	9.748
Speedometer Assembly	Speedometer Body Assembly	9.735
Speedometer and Tachometer	Speedometer and Tach Body Assembly	9.761
Fuel Gage	Fuel Meter Body Assembly	3.108
Engine Coolant Temperature (ECT) Gage	Temperature Meter Body Assembly	1.148
Lower Steering Column Cover Panel	Instrument Panel Column Hole Cover	6.760
Illumination Controller	Elect. Illumination Control Asm	2.490
Rear Defogger Switch	Elect. Cont. RR Defogger Switch Asm	9.778
Rear Wiper/Washer Switch	RR Wiper/Washer Switch	12.188
Ashtray	Instrument Panel Ashtray	16.120
Cigar Lighter	Elect. Cont. Cigarette Lighter Kit	9.709
Glove Box	Instrument Panel Side Box	16.100
Glove Box Lock Assembly	Instrument Panel Side Box Lock Asm	16.110
Glove Box Lock Striker	Instrument Panel Side Box Striker	16.115
Console Box	Front Center Console Box	16.547
Parking Brake Lever Bezel	Parking Brake Lever Cover Assembly	4.612
Audio Alarm Module	Warning Buzzer Alarm	9.765
A/C Switch	A/C Amplifier Switch	9.275
Instrument Panel Handle	Instrument Panel Handle	16.450
Turn/Hazard Relay	Relay Assembly Electric Control Turn and Four Way	2.575

SECTION 8E

WINDSHIELD WIPER/WASHER SYSTEMS

NOTICE: When fasteners are removed, always reinstall them at the same location from which they were removed. If a fastener needs to be replaced, use the correct part number fastener for that application. If the correct part number fastener is not available, a fastener of equal size and strength (or stronger) may be used. Fasteners that are not reused, and those requiring thread-locking compound, will be called out. The correct torque values must be used when installing fasteners that require them. If the above procedures are not followed, parts or system damage could result.

CONTENTS

General Description 8E-1
Front Wiper/Washer System 8E-1
Rear Wiper/Washer System 8E-1
Washer System 8E-1
Intermittent Operation 8E-1
Diagnosis 8E-1
On-Vehicle Service 8E-2
Front Wiper/Washer System 8E-2
Front Wiper Arm 8E-2
Front Wiper Blade Assembly 8E-2
Front Wiper Blade Rubber 8E-3
Front Wiper Linkage 8E-3
Front Wiper Motor 8E-5
Front Washer Nozzle 8E-6
Front Washer Pump 8E-6
Washer Fluid Reservoir 8E-6
Rear Wiper/Washer System 8E-8
Rear Wiper Arm 8E-8
Rear Wiper Blade Assembly 8E-8
Rear Wiper Blade Rubber 8E-8
Rear Wiper Linkage 8E-8
Rear Wiper Motor 8E-9
Rear Washer Nozzle 8E-10
Rear Washer Pump 8E-10
Specifications 8E-10
Fastener Torques 8E-10
Service Parts Information 8E-10

GENERAL DESCRIPTION

FRONT WIPER/WASHER SYSTEM

The front wiper/washer system consists of a wiper motor, wiper linkage, wiper arm, wiper blade assembly and wiper blade rubber, washer fluid reservoir and a washer pump. It is controlled through the combination (windshield wiper/washer) lever which is integrated into the combination switch. The combination (windshield wiper/washer) lever is located on the right side of the steering column. The front wiper circuit is designed so that when the combination (windshield wiper/washer) lever is moved to "OFF," the wiper blades will automatically return to their final rest position.

REAR WIPER/WASHER SYSTEM

The optional rear wiper/washer system consists of a wiper motor, wiper arm, wiper blade assembly, wiper blade rubber and a washer pump. The rear wiper/washer system is controlled through the rear wiper/washer switch located on the instrument panel, left of the steering column. The rear wiper operates at one speed.

WASHER SYSTEM

The front and rear washer systems consist of a shared washer fluid reservoir, separate washer pumps (which are attached to the washer fluid reservoir), hoses, nozzles and washer switches. The washer fluid reservoir is mounted on the right fender behind the right headlamp. The front washer system is actuated by pulling the combination (windshield wiper/washer) lever rearward. The front washer will operate until the lever is released. When the front washer system is activated, the front wipers will operate at low speed regardless of the lever's position. The rear washer is actuated through the rear wiper/washer switch located on the instrument panel, left of the steering column. The rear washer will operate as long as the washer switch is depressed. When the washer switch is depressed the rear wiper will operate regardless of the wiper switch position.

INTERMITTENT OPERATION

Intermittent wiper operation is achieved through the charging and discharging of the intermittent controller condenser. With the combination (windshield wiper/washer) lever in the "INT" position, the front wipers begin to operate at low speed. By the time the wiper motor makes one complete rotation, the condenser in the intermittent controller has discharged. Current flow to the wipers is then cut off until the condenser is recharged (approximately six seconds).

When the wash switch is engaged while the intermittent wipers are activated, the wipers will begin to operate at low speed until the wash switch is released. When the switch is released, the wipers will resume intermittent operation.

DIAGNOSIS

Refer to SECTION 8A for front and rear wiper/washer system electrical diagnosis.

ON-VEHICLE SERVICE

FRONT WIPER/WASHER SYSTEM

Front Wiper Arm

Figure 1

Remove or Disconnect

Important

- Before removing the front wiper arm, note its location for proper installation.

1. One retaining nut from front wiper arm.
2. Front wiper arm from front wiper linkage (Figure 1).

Install or Connect

- Front wiper arm to front wiper linkage; secure with retaining nut.

Tighten

- Front wiper arm retaining nut to 20 N·m (15 lb.ft.).

Front Wiper Blade Assembly

Figures 1 and 2

Remove or Disconnect

NOTICE: Place the front wiper arm(s) in locked vertical position to prevent damage to the windshield.

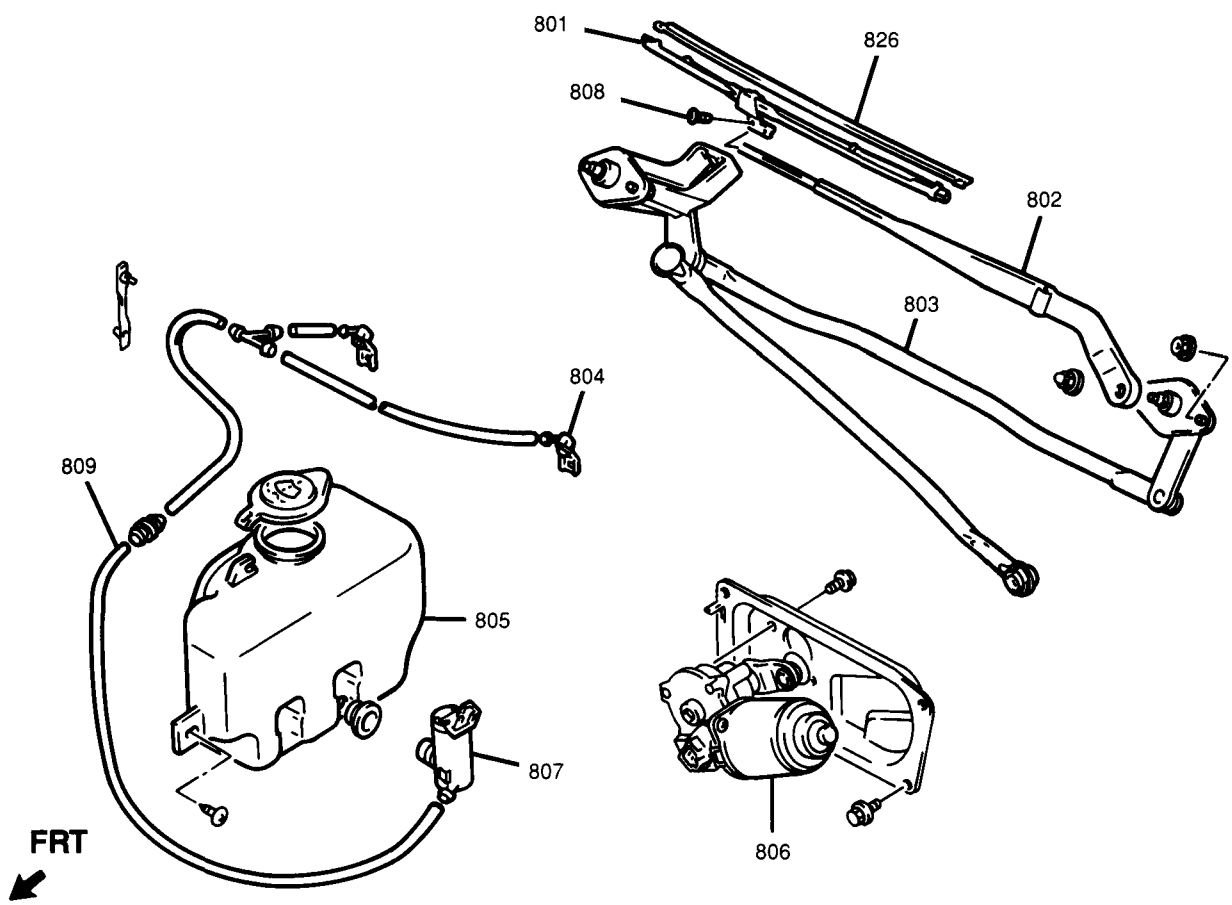

801	FRONT WIPER BLADE ASSEMBLY	806	FRONT WIPER MOTOR
802	FRONT WIPER ARM	807	FRONT WASHER PUMP
803	FRONT WIPER LINKAGE	808	WIPER BLADE RETAINER PIN
804	FRONT WASHER NOZZLE	809	WASHER HOSE
805	WASHER FLUID RESERVOIR	826	FRONT WIPER BLADE RUBBER

NC9201-8E-JT-RS

Figure 1 Front Windshield Wiper/Washer System — Typical

1. Wiper blade retainer pin from front wiper arm (Figure 2).

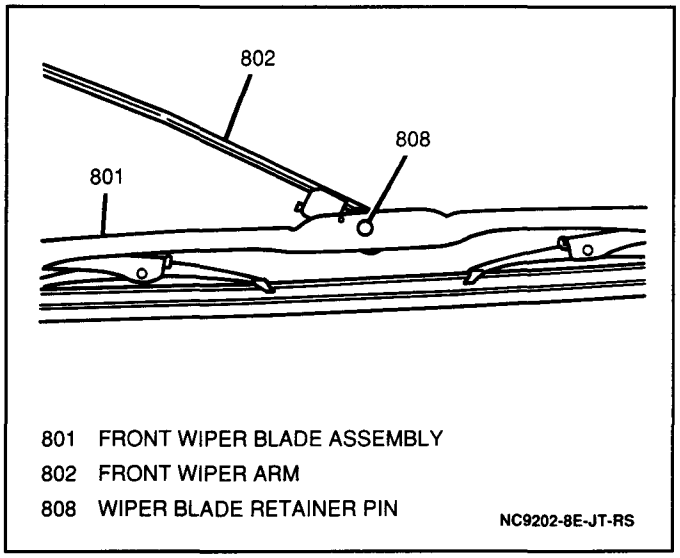

Figure 2 Front Wiper Blade Retainer Pin

2. Front wiper blade assembly from front wiper arm.

Install or Connect

1. Front wiper blade assembly onto front wiper arm.
2. Wiper blade retainer pin to front wiper arm.
- Gently lower front wiper arm to its normal position on the windshield.

Front Wiper Blade Rubber

Figure 1

Remove or Disconnect

- Pull the front wiper blade rubber out of the wiper blade assembly hooks.

Install or Connect

- Slide front wiper blade rubber through wiper blade assembly hooks until it is locked into place.

Front Wiper Linkage

Figures 1 and 3 through 8

Remove or Disconnect

1. Negative (-) battery cable.

Important

- Before removing the front wiper arms, note their location for proper installation.

2. Instrument panel from vehicle. Refer to SECTION 8C.
3. One retaining nut from each front wiper arm (Figure 1).
4. Front wiper arms from vehicle.
5. Washer hose from front washer nozzle (Figure 3).

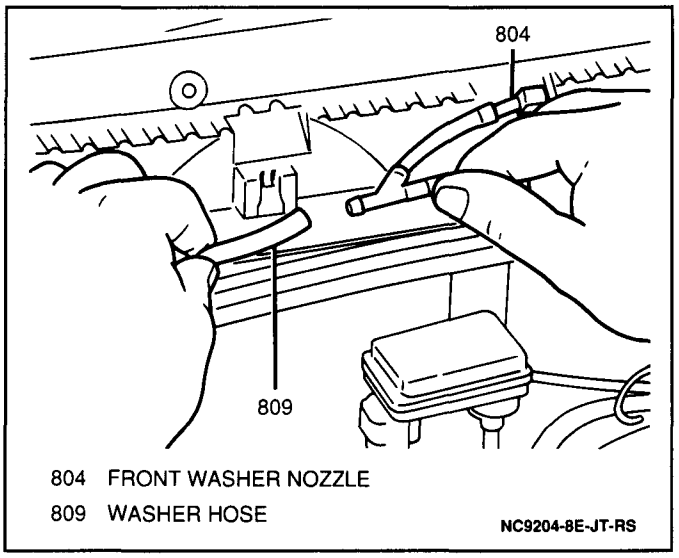

Figure 3 Disconnecting Washer Hose

6. Five plastic retaining clips and right-side cowl vent grille from vehicle.
7. Three plastic retaining clips and left-side cowl vent grille from vehicle.
8. Two screws and cowl center plate, exposing wiper linkage (Figure 4).

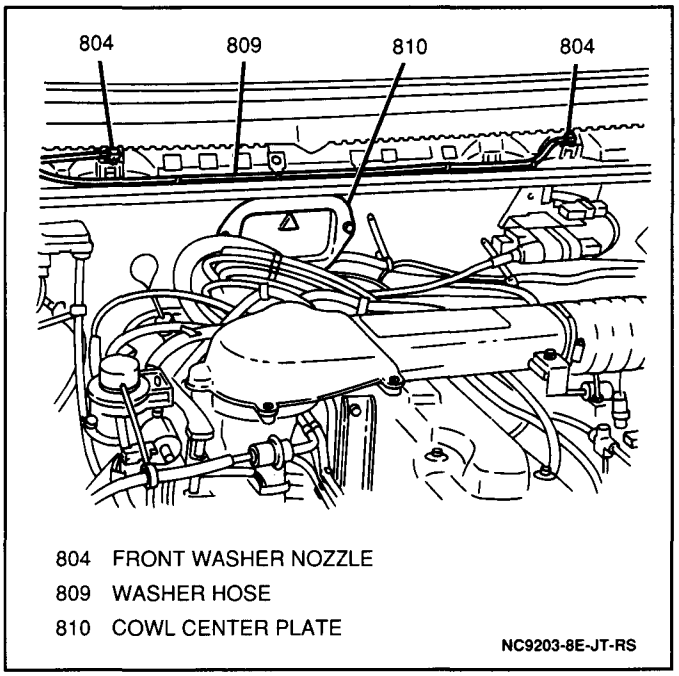

Figure 4 Cowl Center Plate

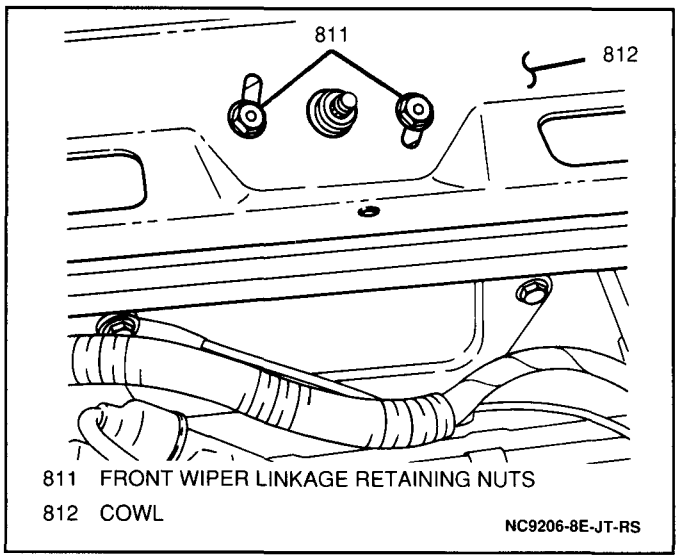

Figure 5 Front Wiper Linkage Retaining Nuts

9. Four retaining nuts securing front wiper linkage to cowl (Figure 5).
10. Front wiper motor electrical connector.
11. Four mounting bolts and pull front wiper motor away from bulkhead (Figure 6).

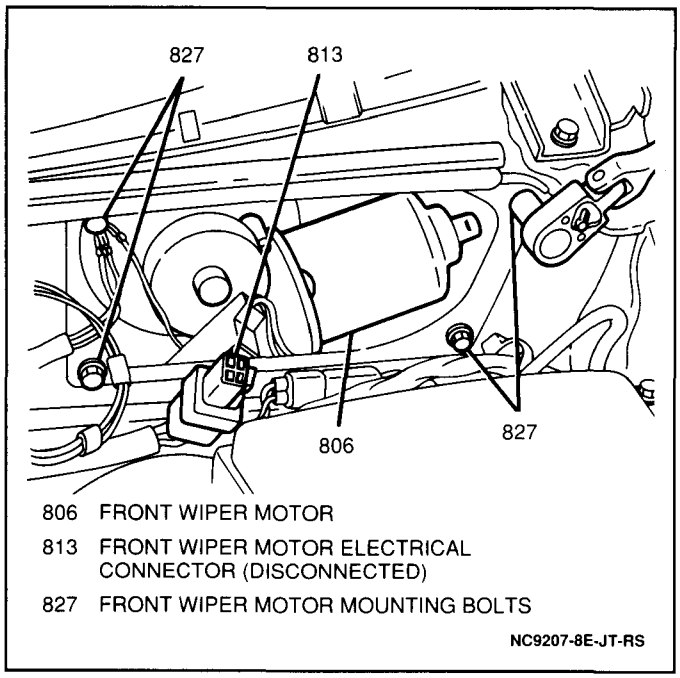

Figure 6 Removing Front Wiper Motor

- Gently pry front wiper linkage from front wiper motor crank arm (Figure 7).

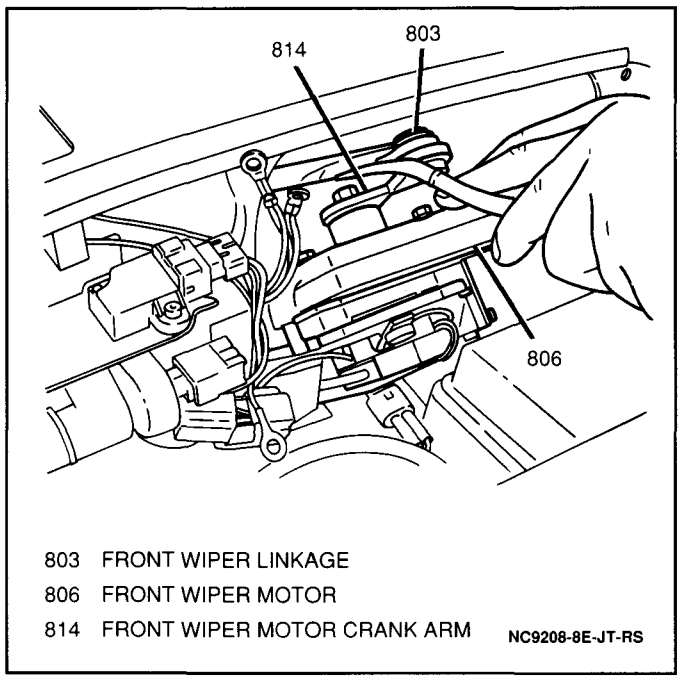

Figure 7 Disconnecting Front Wiper Linkage From Front Wiper Motor

Important

- The front wiper motor crank arm is not serviced separately and should not be disconnected from the front wiper motor. The crank arm is positioned on the wiper motor to allow the wiper arms to return to their normal park position.

12. Front wiper motor from vehicle.

13. Front wiper linkage mounting nut from interior side of bulkhead (Figure 8).

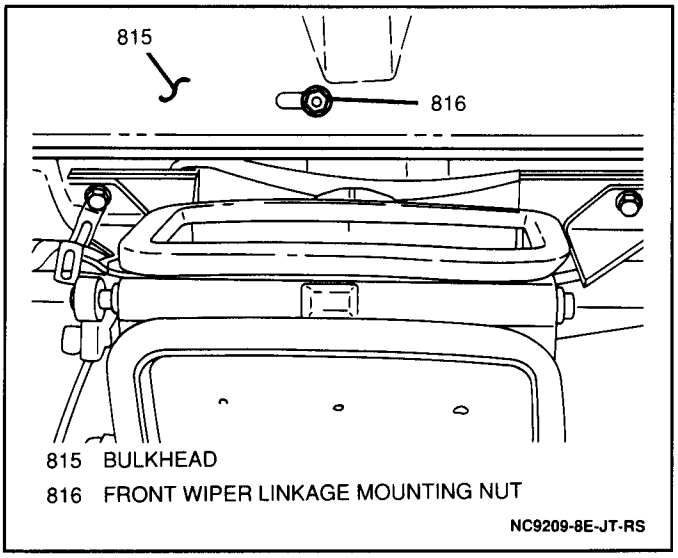

Figure 8 Front Wiper Linkage Mounting Nut

- Slide the front wiper linkage through the front wiper motor opening.

Install or Connect

- Slide the front wiper linkage through the front wiper motor opening.

1. Front wiper linkage mounting nut to interior side of bulkhead.

Tighten

- Front wiper linkage mounting bolt to 20 N·m (15 lb.ft.).

2. Front wiper motor to vehicle; connect front wiper linkage to front wiper motor crank arm.
3. Front wiper motor to bulkhead; secure with four mounting bolts.

Tighten

- Front wiper motor mounting bolts to 20 N·m (15 lb.ft.).

4. Front wiper motor electrical connector.
5. Four retaining nuts securing front wiper linkage to cowl.

Tighten

- Front wiper linkage retaining nuts to 15 N·m (11 lb.ft.).

6. Cowl center plate; secure with two screws.
7. Left-side cowl vent grille; secure with three plastic retaining clips.
8. Right-side cowl vent grille; secure with five plastic retaining clips.
9. Washer hose to front washer nozzle.
10. Front wiper arms to vehicle; secure each with one retaining nut.

Tighten

- Front wiper arm retaining nuts to 20 N·m (15 lb.ft.).

11. Instrument panel to vehicle. Refer to SECTION 8C.
12. Negative (-) battery cable.

Tighten

- Negative (-) battery cable-to-negative (-) battery terminal retainer to 15 N·m (11 lb.ft.).

Front Wiper Motor

Figures 1, 6 and 7

Remove or Disconnect

1. Negative (-) battery cable.
2. Front wiper motor electrical connector.
3. Four mounting bolts and pull front wiper motor away from bulkhead (Figure 6).

- Gently pry front wiper linkage from front wiper motor crank arm (Figure 7).

Important

- The front wiper motor crank arm is not serviced separately and should not be disconnected from the front wiper motor. The crank arm is positioned on the wiper motor to allow the front wiper arms to return to their normal park position.

4. Front wiper motor from vehicle.

Install or Connect

1. Front wiper motor to vehicle; connect front wiper linkage to front wiper motor crank arm.
2. Front wiper motor to bulkhead; secure with four mounting bolts.

Tighten

- Front wiper motor mounting bolts to 20 N·m (15 lb.ft.).

3. Front wiper motor electrical connector.
4. Negative (-) battery cable.

Tighten

- Negative (-) battery cable-to-negative (-) battery terminal retainer to 15 N·m (11 lb.ft.).

Front Washer Nozzle

Figures 1 and 3

Important

- If a nozzle becomes plugged, apply air pressure to help remove the obstruction. If it remains plugged, the nozzle must be replaced.

Remove or Disconnect

1. Front washer hose from nozzle (Figure 3).
2. Front washer nozzle from cowl vent grille.

Install or Connect

1. Front washer nozzle to cowl vent grille.
2. Front washer hose to front washer nozzle.

Front Washer Pump

Figure 1

Remove or Disconnect

1. Negative (-) battery cable.
2. Front washer pump electrical connectors.
3. Washer hose from front washer pump.
4. Front washer pump from washer fluid reservoir (Figure 1).

Install or Connect

1. Front washer pump to washer fluid reservoir.
2. Washer hose to front washer pump.
3. Front washer pump electrical connectors.
4. Negative (-) battery cable.

Tighten

- Negative (-) battery cable-to-negative (-) battery terminal retainer to 15 N·m (11 lb.ft.).

Washer Fluid Reservoir

Figure 1

Remove or Disconnect

1. Negative (-) battery cable.
2. Two screws and washer fluid reservoir assembly from vehicle (Figure 1).
3. Front (and rear, if equipped) washer pump(s) electrical connector(s).
4. Washer hose(s) from pump(s).
5. Front (and rear if equipped) washer pump(s) from reservoir.

Install or Connect

1. Front (and rear, if equipped) washer pump(s) to washer fluid reservoir.
2. Washer hose(s) to pump(s).
3. Front (and rear, if equipped) electrical connector(s).
4. Washer fluid reservoir to vehicle; secure with two screws.
5. Negative (-) battery cable.

Tighten

- Negative (-) battery cable-to-negative (-) battery terminal retainer to 15 N·m (11 lb.ft.).

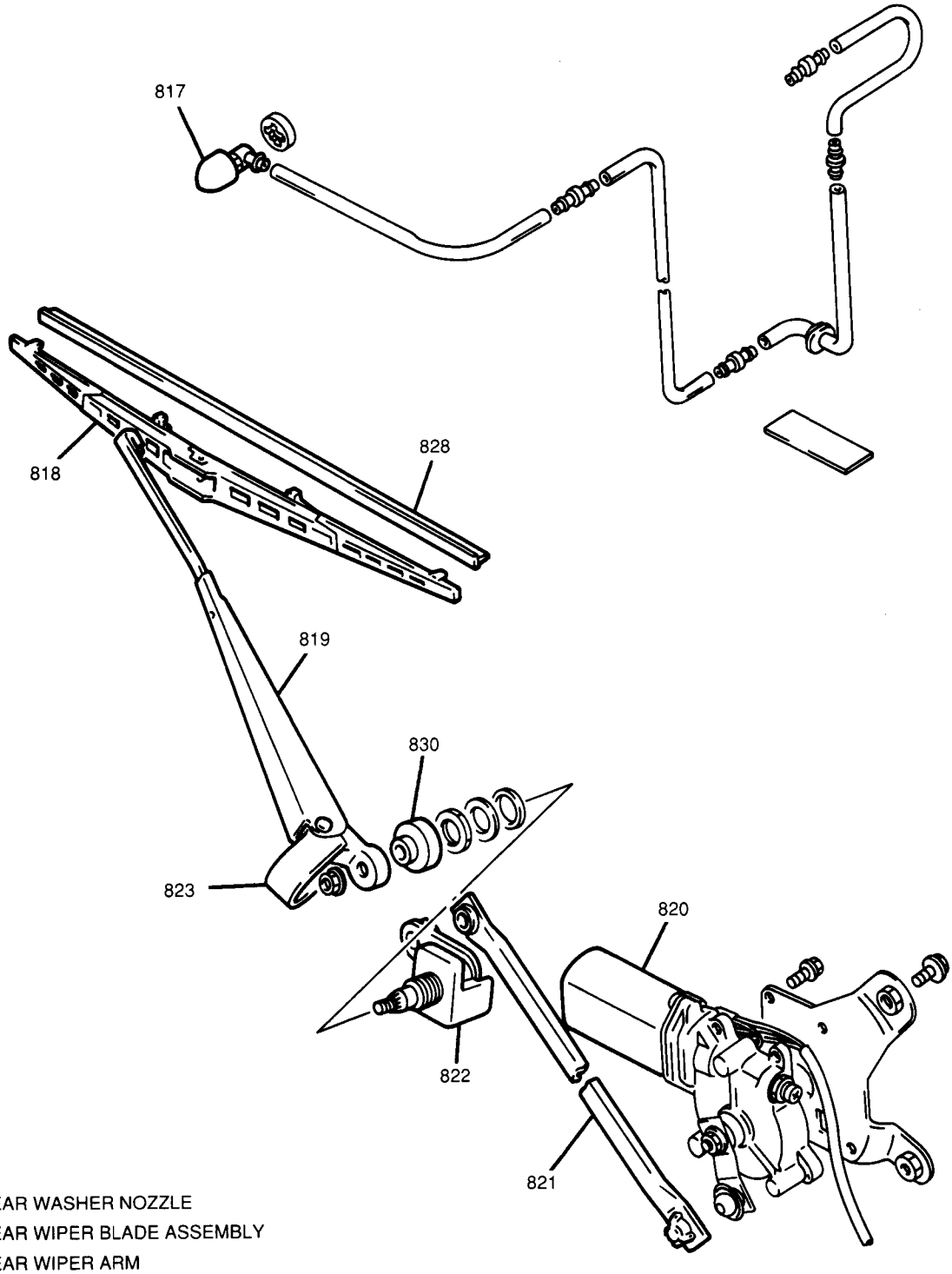

817 REAR WASHER NOZZLE
818 REAR WIPER BLADE ASSEMBLY
819 REAR WIPER ARM
820 REAR WIPER MOTOR
821 REAR WIPER LINKAGE
822 REAR WIPER PIVOT ASSEMBLY
823 NUT COVER
828 REAR WIPER BLADE RUBBER
830 REAR WIPER PIVOT ASSEMBLY CAP

NC9210-8E-JT-RS

Figure 9 Rear Wiper/Washer System

REAR WIPER/WASHER SYSTEM

Rear Wiper Arm

Figures 9 and 10

Remove or Disconnect

1. Spare tire from rear door to gain access to rear wiper arm by removing spare tire cover, tire lock and wheel nuts.
   - Lift nut cover to gain access to rear wiper arm retaining nut (Figure 9).

Important

- Before removing the rear wiper arm, note its location for proper installation.

2. Rear wiper arm retaining nut from rear wiper arm (Figure 10).

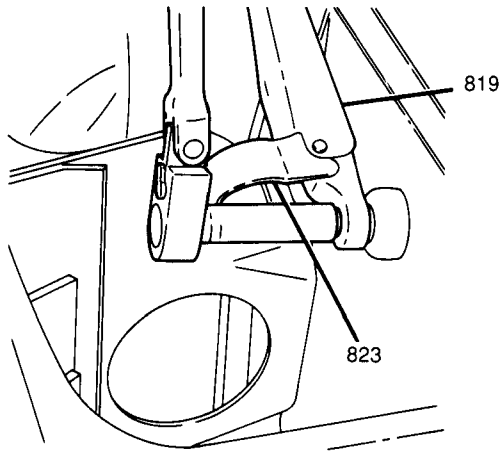

819 REAR WIPER ARM
823 NUT COVER
NC9211-8E-JT-RS

Figure 10 Removing Rear Wiper Arm Retaining Nut

3. Rear wiper arm from rear wiper pivot assembly (Figure 9).

Install or Connect

1. Rear wiper arm to rear wiper pivot assembly; secure with retaining nut.

Tighten

- Rear wiper arm retaining nut to 20 N·m (15 lb.ft.).

- Place nut cover over rear wiper arm retaining nut.

2. Spare tire to rear door; secure with wheel nuts.

Tighten

- Spare tire wheel nuts to 54 N·m (40 lb.ft.).

3. Tire lock and spare tire cover.

Rear Wiper Blade Assembly

Figure 9

Remove or Disconnect

- Depress retaining tab on rear wiper blade assembly, slide blade assembly down rear wiper arm until it clears the wiper arm hook and then remove the blade assembly from the wiper arm (Figure 9).

Install or Connect

- Rear wiper blade assembly to rear wiper arm, slide blade assembly into the wiper arm hook until blade assembly clicks and locks into place.

Rear Wiper Blade Rubber

Figure 9

Remove or Disconnect

- Lift the rear wiper blade rubber tip to clear the retaining tab, then slide the blade rubber out of the rear wiper blade assembly.

Install or Connect

- Slide the rear wiper blade rubber completely through the rear wiper blade assembly until it clicks into place and locks.

Rear Wiper Linkage

Figures 9 through 11

Remove or Disconnect

1. Negative (-) battery cable.
2. Spare tire from rear door to gain access to rear wiper arm by removing spare tire cover, tire lock and wheel nuts.
   - Lift nut cover to gain access to rear wiper arm retaining nut (Figure 9).

Important

- Before removing rear wiper arm, note its location for proper installation.

3. Rear wiper arm retaining nut from rear door wiper arm (Figure 10).
4. Rear wiper arm from rear wiper pivot assembly.
5. Fourteen plastic retaining clips and rear door inner trim panel.
6. Three screws retaining rear wiper motor to rear door (Figure 11).

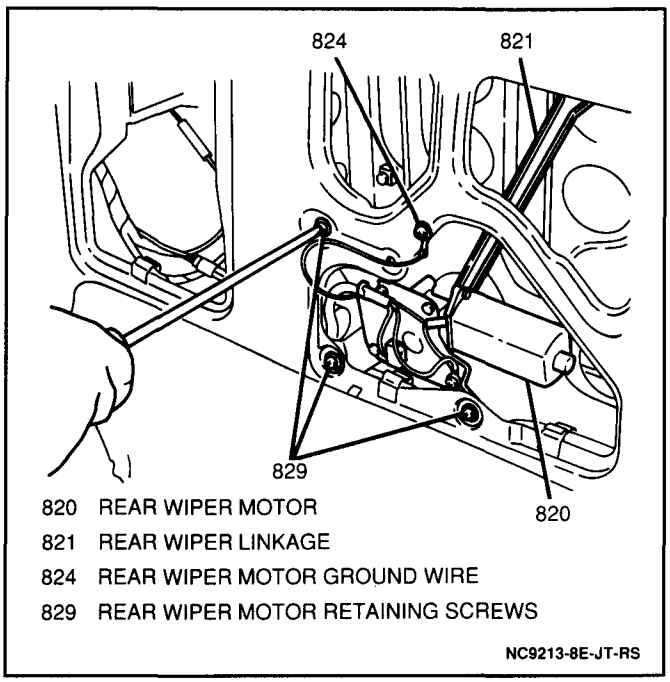

Figure 11 Removing Rear Wiper Motor and Rear Wiper Linkage

7. One screw and rear wiper motor ground wire from rear door (Figure 11).
- Gently pry rear wiper linkage from rear wiper motor crank arm.

Important

- The rear wiper motor crank arm is not serviced separately and should not be disconnected from the rear wiper motor. The crank arm is positioned on the wiper motor to allow the rear wiper arm to return to its normal park position.

8. Rear wiper pivot assembly cap, nut, washer, and gasket from rear wiper pivot assembly (Figure 9).
- Slide rear wiper linkage and rear wiper pivot assembly out of rear door.
- Gently pry rear wiper linkage from rear wiper pivot assembly.

Install or Connect

1. Rear wiper linkage to rear wiper pivot assembly.
2. Rear wiper pivot assembly (with rear wiper linkage) to rear door secure with gasket, washer, and nut.

Tighten

- Rear wiper pivot assembly nut to 20 N·m (15 lb.ft.).

3. Rear wiper pivot assembly cap to pivot assembly.
4. Rear wiper linkage to rear wiper motor crank arm.
5. Three screws securing rear wiper motor to rear door.
6. Rear wiper motor ground wire to rear door; secure with screw.
7. Rear door inner trim panel; secure with plastic retaining clips.
8. Rear wiper arm to rear wiper pivot assembly; secure with retaining nut.

Tighten

- Rear wiper arm retaining nut to 20 N·m (15 lb.ft.).

- Place nut cover over rear wiper arm retaining nut.

9. Spare tire to rear door; secure with wheel nuts.

Tighten

- Spare tire wheel nuts to 54 N·m (40 lb.ft.).

10. Tire lock and spare tire cover.
11. Negative (-) battery cable.

Tighten

- Negative (-) battery cable-to-negative (-) battery terminal retainer to 15 N·m (11 lb.ft.).

Rear Wiper Motor

Figures 9 and 11

Remove or Disconnect

1. Negative (-) battery cable.
2. Fourteen plastic retaining clips and rear door inner trim panel.
3. Three screws securing rear wiper motor to rear door (Figure 11).
4. One screw and rear wiper motor ground wire from rear door (Figure 11).
- Gently pry rear wiper linkage from rear wiper motor crank arm.

Important

- The rear wiper motor crank arm is not serviced separately and should not be disconnected from the rear wiper motor. The crank arm is positioned on the wiper motor to allow the rear wiper arm to return to its normal park position.

5. Rear wiper motor from vehicle.

Install or Connect

1. Rear wiper motor to rear door.
2. Rear wiper linkage to rear wiper motor crank arm.
3. Three screws securing rear wiper motor to rear door.
4. Rear wiper motor ground wire to rear door; secure with one screw.
5. Rear door inner trim panel; secure with fourteen plastic retaining clips.
6. Negative (-) battery cable.

Tighten

- Negative (-) battery cable-to-negative (-) battery terminal retainer to 15 N·m (11 lb.ft.).

Rear Washer Nozzle

Figures 9 and 12

Remove or Disconnect

- Gently pull rear washer nozzle from rear washer nozzle mounting hole above rear door. (Figure 12).

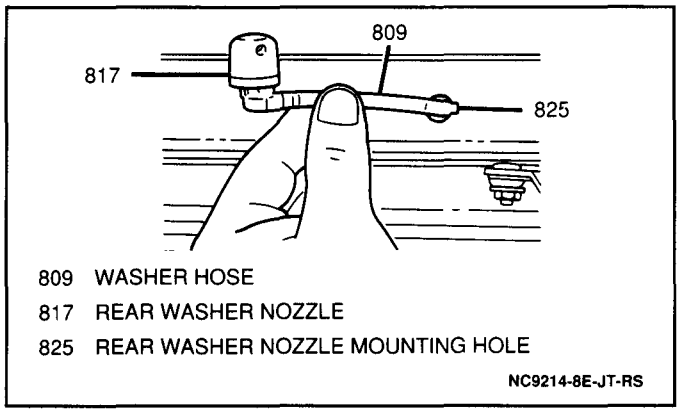

Figure 12 Removing Rear Washer Nozzle

- Rear washer hose from rear washer nozzle.

Install or Connect

1. Rear washer hose to rear washer nozzle.
2. Rear washer nozzle to rear washer nozzle mounting hole above rear door.

Rear Washer Pump

Remove or Disconnect

1. Negative (-) battery cable.
2. Rear washer pump electrical connector.
3. Rear washer hose from rear washer pump.
4. Rear washer pump from washer fluid reservoir.

Install or Connect

1. Rear washer pump to washer fluid reservoir.
2. Washer hose to rear washer pump.
3. Electrical connector.
4. Negative (-) battery cable.

Tighten

- Negative (-) battery cable-to-negative (-) battery terminal retainer to 15 N·m (11 lb.ft.).

SPECIFICATIONS

FASTENER TORQUES

Spare Tire Wheel Nuts	54 N·m (40 lb.ft)
Wiper Linkage Retaining Nuts	15 N·m (11 lb.ft.)
Wiper Arm Retaining Nut	20 N·m (15 lb.ft.)
Rear Wiper Pivot Assembly Nut	20 N·m (15 lb.ft.)
Wiper Motor Mounting Bolts	20 N·m (15 lb.ft.)
Washer Fluid Reservoir Retaining Nuts	13 N·m (115 lb.in.)
Negative (-) Battery Cable-to-Negative (-) Battery Terminal Retainer	15 N·m (11 lb.ft.)

SERVICE PARTS INFORMATION

Component Name Used in Section 8E	Reference Name in Service Parts Catalog	Group Number
Front Wiper Motor	Motor Asm, Front Wiper	16.064
Front Wiper Linkage	Link Asm, Front Wiper	16.063
Front Wiper Arm	Arm Asm, Front Wiper	16.063
Front Wiper Blade Assembly	Blade Asm, Front Wiper	16.062
Front Wiper Blade Rubber	Blade, Front Wiper Rubber	16.062
Front Washer Pump	Pump Asm, Front WSW	16.065
Front Washer Nozzle	Nozzle, WSW Tank	16.065
Washer Fluid Reservoir	Tank Asm, WSW System	16.065
Rear Wiper Motor	Motor Asm, Rear Wiper	16.064
Rear Wiper Linkage	Link Assembly, Rear Wiper	16.063
Rear Wiper Arm	Arm Asm, Rear Wiper	16.063
Rear Wiper Blade Assembly	Blade Asm, Rear Wiper Arm	16.062
Rear Wiper Blade Refill	Blade, Rear Wiper (Rubber)	16.062
Rear Washer Pump	Pump, Rear Washer	16.065
Rear Washer Nozzle	Nozzle, Rear Wiper Washer	16.065
Rear Wiper Pivot Assembly	Pivot Asm, Rear Wiper	16.063
Nut Cover	Cover, Wiper Motor Head	16.063

SECTION 9

Accessories

CONTENTS

Audio Systems 9A-1

Geo

SECTION 9A

AUDIO SYSTEMS

NOTICE: When fasteners are removed, always reinstall them at the same location from which they were removed. If a fastener needs to be replaced, use the correct part number fastener for that application. If the correct part number fastener is not available, a fastener of equal size and strength (or stronger) may be used. Fasteners that are not reused, and those requiring thread-locking compound, will be called out. The correct torque values must be used when installing fasteners that require them. If the above procedures are not followed, parts or system damage could result.

CONTENTS

General Description 9A-1
FM Radio Reception 9A-1
AM Radio Reception 9A-1
Tape Player and Cassette Care 9A-1
Operating Instructions 9A-2
Delco® AM/FM Stereo Radio with Clock 9A-2
Radio Operation 9A-2
Clock Operation 9A-3
Delco® AM/FM Stereo Radio, Cassette Player and Clock 9A-3
Radio Operation 9A-3
Cassette Player Operation 9A-4
Clock Operation 9A-5
Theft-Deterrent Feature 9A-5
Diagnosis 9A-6
Audio System 9A-6
Cassette Tape Player and Cassette 9A-6
On-Vehicle Service 9A-6
Radio 9A-6
Speakers 9A-7
Front Speakers 9A-7
Rear Speakers 9A-8
Antenna 9A-8
Specifications 9A-9
Fastener Torques 9A-9
Service Parts Information 9A-9

GENERAL DESCRIPTION

The audio system consists of a radio, four speakers, and an antenna. An AM/FM stereo radio with clock and an AM/FM stereo radio with auto-reverse tape player and clock are available options. The ignition switch must be in the "ACC" or "ON" positions to operate either of the sound systems. The two front speakers are located on the lower part of the instrument panel, one on each side. The two rear speakers are located in the rear quarter trim panel. The AM/FM stereo radio with auto-reverse tape player and clock has five preset tone settings for sound quality and is equipped with a theft-deterrent feature.

NOTICE: All GM factory-equipped audio systems have ungrounded speakers. Installing aftermarket tape players, citizen band radios or other units which use the factory speakers may damage the audio system or impair the operation of the aftermarket unit.

FM RADIO RECEPTION

The FM tuner operates on a band from 87.7 Mhz to 107.9 Mhz. Optimum FM radio reception range is usually limited to a maximum of 16 to 64 kilometers (10 to 40 miles) depending upon terrain, atmospheric conditions, station power, antenna height and distance from the transmitter. Tall buildings, hills or other objects can cause signal flutter or noise which can be eliminated by tuning to a stronger station.

AM RADIO RECEPTION

The AM tuner operates on a band from 530 Khz to 1710 Khz. The range of most AM stations is greater than FM, especially at night. The longer range, however, can cause stations to interfere with each other. AM reception is also subject to noise interference from storms, power lines, etc. Reducing treble helps reduce the noise.

TAPE PLAYER AND CASSETTE CARE

Optimum cassette performance can be maintained by cleaning the internal tape head, capstan and pinch rollers every 100 hours of operation. Since these components can be reached through the tape player door, radio removal is not necessary. Instead, this can be done by inserting a nonabrasive cleaning cassette in place of the music tape. Follow instructions provided with the cleaning cassette. If a cleaning cassette is not available, dampen a cotton swab with ordinary rubbing alcohol and clean the tape head, capstan and pinch rollers. After cleaning, use a dry cotton swab to dry the tape head, capstan and pinch rollers and to make sure they are free of any foreign matter. Do not place cassettes near extreme heat or direct sunlight. Protect the open ends from dirt or damage by storing them in their original packaging or other protective cases. For best results, tapes over 90 minutes in total length are not recommended.

NOTICE: Do not use silicone spray lubricant for switch, plunger or tape head lubrication. No lubricants should be used since they may cause the player to operate improperly, especially at extreme temperatures. Do NOT bring any magnetized tools near the tape head. If the head becomes magnetized, every cassette played will be degraded.

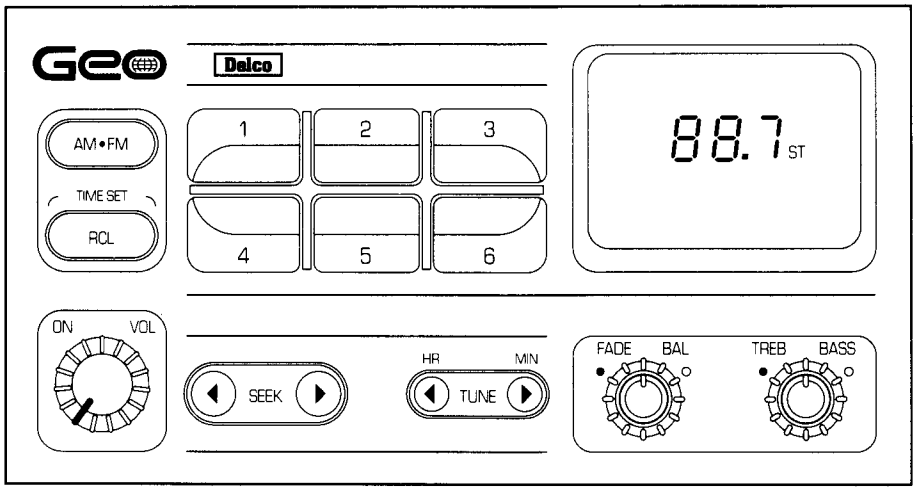

PC4301-9A-M-RS

Figure 1 Delco® AM/FM Stereo Radio with Clock

OPERATING INSTRUCTIONS

DELCO® AM/FM STEREO RADIO WITH CLOCK

Figure 1

Radio Operation

Radio Display Illumination

When the headlamps or parking lamps are turned on, the illumination of the display is controlled by the illumination controller (located on the lower instrument panel to the left of the steering wheel). When the headlamps or parking lamps are off, the display is lighted at 100% intensity and is not adjustable.

"ON VOL"

The ignition must be in the "ACC" or "ON" positions for the radio to operate. With the ignition in the "OFF" position, the time will be displayed for approximately five seconds by pressing the "RCL" button. When the ignition is in the "ACC" or "ON" positions and the radio is turned off, the time will be displayed and all controls except those required to set the clock will be deactivated; refer to "Clock Operation" later in this section. Turning the knob clockwise, past the detent, initially turns the radio on and turning further will increase volume. To decrease volume, turn the knob counterclockwise. Continuing past the detent turns the radio off.

"RCL"

Pressing the "RCL" button (with the radio on) will toggle the display between the clock and radio frequency. After approximately five seconds, the display will revert back to the clock. This dual function button is also used to set the clock; refer to "Clock Operation" later in this section.

"AM-FM"

Press this button to toggle between the AM and FM bands. "AM" or "FM" will appear on the display depending upon the band chosen, and the radio will automatically go to the frequency tuned when that band was last active.

"◀SEEK▶"

The seek function is activated by pressing either end of the "◀SEEK▶" button. Press "SEEK▶" to automatically tune to the next higher station within range. Press "◀SEEK" to automatically tune to the next lower station within range. In either case, when the end of the band is reached, the seek function will continue in the same direction at the opposite end of the band.

"◀TUNE▶"

Press and hold the "TUNE▶" button to manually tune to the next higher frequency. Press and hold the "◀TUNE" button to manually tune to the next lower frequency. On the AM band, the frequency advances in increments of 10 Khz in both directions. On the FM band, the frequency advances in increments of 0.2 Mhz in both directions. Release the button when desired frequency is reached. This dual function button is also used to set the clock; refer to "Clock Operation" later in this section.

Radio Frequency Preset Buttons

There are six station preset buttons numbered "1" through "6". They permit presetting of 12 stations (6 AM and 6 FM).

To set a station preset button:

1. Select the desired band (AM or FM).
2. Tune the radio to the desired station.
3. Press and hold the desired preset button for approximately three seconds. The sound will be interrupted during this step. When the sound resumes, the button is set to the desired station and the button

can be released. The radio will now automatically tune to that pre-determined station when the button is pressed.

If the radio power is interrupted, the preset buttons lose their memory and must be reset.

Setting Tone

Turn the "BASS" knob (outer ring) clockwise to increase bass and counterclockwise to decrease it. Turn the "TREB" knob (inner ring) clockwise to increase treble and counterclockwise to decrease it.

Adjusting Speaker Balance

Turn the "BAL" knob (outer ring) to move the sound between the right and left speakers. Turn the "FADE" knob (inner ring) to move the sound between the front and rear speakers.

Clock Operation

The clock function of this radio does not have a memory function. If the radio power is interrupted, the clock will have to be reset. To set the clock, the ignition switch must be in the "ACC" or "ON" position, but the radio can be on or off. To set the hour, press and hold "RCL" ("TIME SET"). At the same time, press and hold "◀TUNE" ("HR") until the correct hour appears. To set the minutes, press and hold "RCL" ("TIME SET"). At the same time, press and hold "TUNE▶" ("MIN") until the correct minute appears.

DELCO® AM/FM STEREO RADIO, CASSETTE PLAYER AND CLOCK

Figure 2

Radio Operation

Radio Display Illumination

When the headlamps or parking lamps are turned on, the illumination of the display is controlled by the illumination controller (located on the lower instrument panel to the left of the steering wheel). When the headlamps or parking lamps are off, the display is lighted at 100% intensity and is not adjustable.

"ON VOL"

The ignition must be in the "ACC" or "ON" positions for the radio to operate. With the ignition in the "OFF" position, the time will be displayed for approximately five seconds by pressing the "RCL PROG" button. When the ignition is in the "ACC" or "ON" positions and the radio is turned off, the time will be displayed and all controls except tape eject and those required to set the clock will be deactivated; refer to "Clock Operation" later in this section. Turning the knob clockwise past the detent initially turns the radio on and turning further will increase volume. To decrease volume, turn the knob counterclockwise. Continuing past the detent turns the radio off.

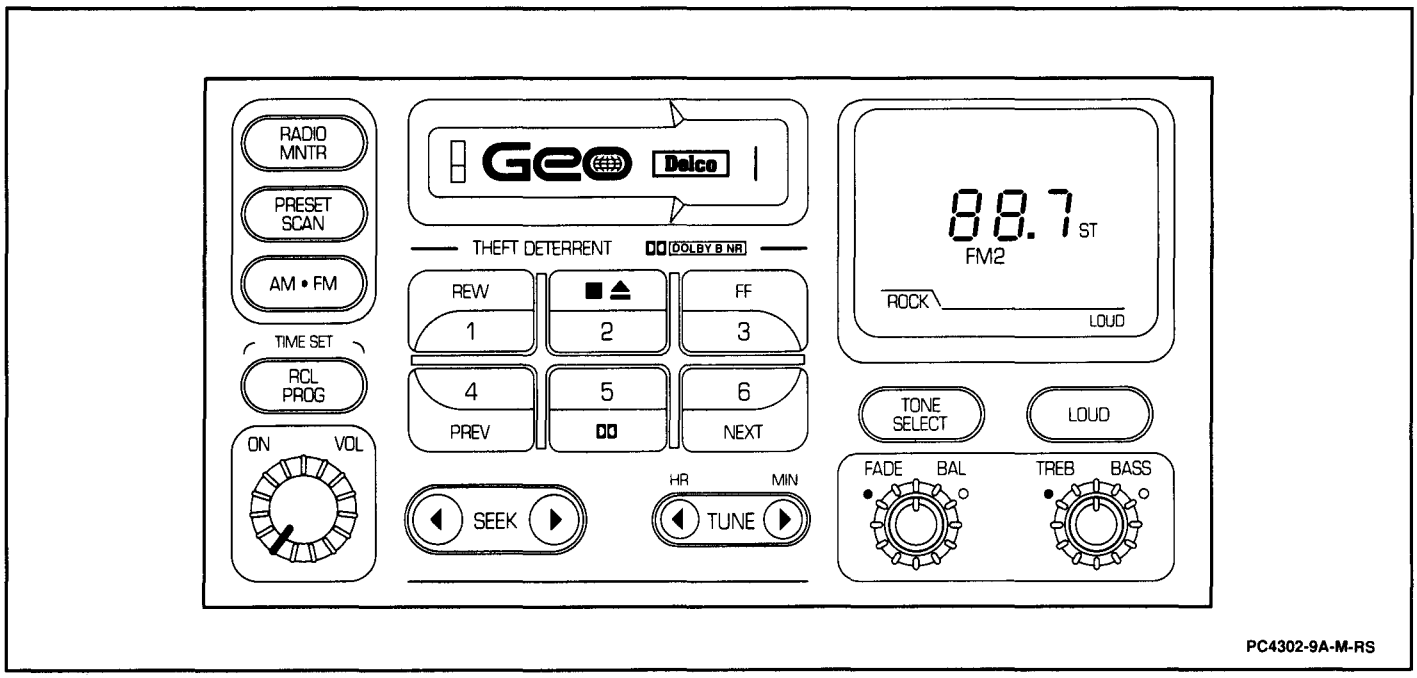

Figure 2 Delco® AM/FM Stereo Radio, Cassette Player and Clock

"RCL PROG"

Pressing the "RCL PROG" button (with the radio on) will toggle the display between the clock and radio frequency. After approximately five seconds, the display will revert back to the clock. This dual function button is also used to set the clock; refer to "Clock Operation" later in this section.

"AM-FM"

Press this button to toggle between the AM and FM bands. "AM," "FM1" or "FM2" will appear on the display depending upon the band chosen, and the radio will automatically go to the frequency tuned when that band was last active.

"PRESET SCAN"

Pressing the "PRESET SCAN" button will preview the preset stations on the band currently selected (AM, FM1 or FM2) starting with the first preset button and proceeding through the sixth button, stopping on each for approximately five seconds. Each frequency will be displayed as it is tuned. If not discontinued before reaching the sixth preset button, the radio will return to the first button and repeat the process. Press "PRESET SCAN" to cancel the preset scan function.

"◀SEEK▶"

The seek function is activated by pressing either end of the "◀SEEK▶" button. Press "SEEK▶" to automatically tune to the next higher station within range. Press "◀SEEK" to automatically tune to the next lower station within range. In either case, when the end of the band is reached, the seek function will continue in the same direction at the opposite end of the band.

"◀TUNE▶"

Press and hold the "TUNE▶" button to manually tune to the next higher frequency. Press and hold the "◀TUNE" button to manually tune to the next lower frequency. On the AM band, the frequency advances in increments of 10 Khz in both directions. On the FM band, the frequency advances in increments of 0.2 Mhz in both directions. Release the button when desired frequency is reached. This dual function button is also used to set the clock; refer to "Clock Operation" later in this section.

Radio Frequency Preset Buttons

There are six station preset buttons numbered "1" through "6." They permit presetting of 18 stations (6 AM and 12 FM — 6 on FM1 and 6 on FM2).

To set a station preset button:

1. Select the desired band (AM or FM).
2. Tune the radio to the desired station.
3. Press and hold the desired preset button for approximately three seconds. The sound will be interrupted during this step. When the sound resumes, the button is set to the desired station and the button can be released. The radio will now automatically tune to the pre-determined station when the button is pressed.

If the radio power is interrupted, the preset buttons will lose their memory and must be reset. All six buttons have a dual function. Refer to "Cassette Operation" later in this section for details on their operation in the cassette mode.

Setting Tone

Turning the "BASS" knob (outer ring) clockwise will increase bass and turning counterclockwise will decrease it. Turning the "TREB" knob (inner ring) clockwise will increase treble and counterclockwise will decrease it.

"LOUD"

To increase the bass tone at low volume levels, press the "LOUD" button. When the loudness feature is activated, "LOUD" will appear on the display. Press the "LOUD" button again to disable the loudness feature and return to normal bass tone.

"TONE SELECT"

Press the "TONE SELECT" button to activate the preset tone feature and choose preset treble and bass equalization settings for "ROCK," "NEWS," "POP," "JAZZ" or "CLASSICAL." Each time the "TONE SELECT" button is pressed, a different setting will appear on the display. Press the "TONE SELECT" button again after "CLASSICAL" and control of tone will revert back to the "TREB" and "BASS" knobs.

Adjusting Speaker Balance

Turn the "BAL" knob (outer ring) to move the sound between the right and left speakers. Turn the "FADE" knob (inner ring) to move the sound between the front and rear speakers.

Cassette Player Operation

The ignition switch must be in the "ACC" or "ON" position for the cassette player to operate. The cassette player is designed to work best with tapes which are 60 to 90 minutes long. Tapes longer than this are thinner and may not function properly in this unit. Do not use these tapes to diagnose problems in the cassette player.

The side of the cassette with the tape visible should face to the right when inserted in the unit. If there is no sound or just a garbled sound, it may not be sitting squarely in the player. Press the "2" ("■⏏" — stop/eject) button to remove the tape and reinsert it. Once the tape is playing, the volume, balance and fade controls function in the same manner as with the radio. The tape bias is set automatically. When a metal or chrome tape is inserted, "MTL" will appear on the display.

Tape Direction Indicators

The side of the tape being played (top or bottom) is indicated by the arrows at the far left of the display.

Fast Forward

Press the "3" ("FF") button to rapidly advance to another part of the tape. Press the "3" ("FF"), "RLC/PROG" or "2" ("■⏏" — stop/eject) buttons to return to normal playing speed.

Rewind

Press the "1" ("REW") button to rapidly reverse and return to another part of the tape. Press the "1" ("REW"), "RLC/PROG" or "2" ("■▲" — stop/eject) buttons to return to normal playing speed.

Next Selection

Press the "6" ("NEXT") button to move rapidly to the beginning of the next selection. For the next selection function to operate properly, there must be three to four seconds of silence between selections on the tape.

Previous Selection

Press the "4" ("PREV") button to play the last selection again. For the previous selection function to operate properly, there must be three to four seconds of silence between selections on the tape.

Changing Programs

Press the "RCL PROG" button to switch from one side of the tape to the other.

Dolby® Noise Reduction

Press the "5" ("DD") button to remove noise from Dolby® NR-encoded tapes. (Dolby Noise Reduction is manufactured under license from Dolby Laboratories Licensing Corporation. Dolby and the double-D symbol are trademarks of Dolby Laboratories Licensing Corporation.)

Stop/Eject

Press the "2" ("■▲" — stop/eject) button to remove or stop the tape and return to radio operation.

Radio Monitor

Press the "RADIO MNTR" button to listen to the radio when you are fast-forwarding or rewinding a cassette tape. You may only use the "◀TUNE▶," "◀SEEK▶" and "PRESET SCAN" buttons while in the radio mode.

Clock Operation

The clock function of this radio does not have a memory function. If the radio power is interrupted, the clock will have to be reset. To set the clock, the ignition switch must be in the "ACC" or "ON" position, but the radio can be on or off. To set the hour, press and hold "RCL PROG" ("TIME SET"). At the same time, press and hold "◀TUNE" ("HR") until the correct hour appears. To set the minutes, press and hold "RCL PROG" ("TIME SET"). At the same time, press and hold "TUNE▶" ("MIN") until the correct minute appears.

THEFT-DETERRENT FEATURE

The theft-deterrent feature for the audio systems with cassette player can be used or ignored. If ignored, the system will function normally. If this feature is used, the system will not be operable if it is stolen or if power loss occurs unless the correct security code is known.

Setting Security Code

The security code is a four-digit numeric code established by the operator. Once set, if the system loses power for any reason, the security code must be re-entered before the system will again operate. Refer to "Unlocking System After Power Loss" later in this section. To enter the security code:

1. Write down any four-digit number and keep it in a safe place.
2. Turn the ignition switch to the "ACC" or "ON" position.
3. Turn the audio system off.
4. Press the "1" and "4" buttons together. Hold them down until "----" appears on the display.

Important

- The audio system is now ready to accept the security code. A delay of more than 15 seconds between steps will return the system to the radio mode.

5. Press the "◀SEEK▶" and/or "◀TUNE▶" button(s) and "0000" will appear on the display.
6. Press the "◀SEEK" button and hold until the first digit of the code appears, then release the button. The numbers will cycle starting at "1" and running through "0" for each of the digits.
7. Press the "SEEK▶" button and hold until the second digit of the code appears, then release the button.
8. Press the "◀TUNE" button and hold until the third digit of the code appears, then release the button.
9. Press the "TUNE▶" button and hold until the fourth digit of the code appears, then release the button.
10. Check that the code entered is correct. If it is not, press appropriate button(s) (refer to Steps 6-9) to correct wrong digit(s). When correct, press the "AM-FM" button. "REP" will appear on the display, which means you must repeat Steps 5-9, then proceed to Step 11.
11. Check that the code entered is correct. If it is not, press appropriate button(s) (refer to Steps 6-9) to correct wrong digit(s). When correct, press the "AM-FM" button again. The display will now show "SEC" (secured).

Unlocking System After Power Loss

If electrical power is disrupted to the audio system for any reason while the theft-deterrent feature is in the "SEC" mode (activated), the unit will not operate and "LOC" (locked) will appear on the display when the ignition is turned to "ACC" or "ON." To unlock the unit:

1. Press the "◀SEEK▶" and/or "◀TUNE▶" button(s) and "0000" will appear on the display.
2. Press the "◀SEEK" button and hold until the first digit of the code appears. The numbers will cycle starting at "1" and running through "0" for each of the digits.
3. Press the "SEEK▶" button and hold until the second digit of the code appears.
4. Press the "◀TUNE" button and hold until the third digit of the code appears.

5. Press the "TUNE ▶" button and hold until the fourth digit of the code appears.
6. Press the "AM-FM" button after checking that the code displayed matches the code for the system. The time should now appear on the display. The radio will remain in the secured mode. To remove the customer code and deactivate the security feature, press and hold the "1" and "4" buttons together until "SEC" appears on the display. The security code must now be re-entered; repeat Steps 1 through 6.

Determining Factory Backup Unlocking Code for Secured Radio

If the security function is activated and the radio is disconnected from battery power, the radio will display "LOC." The radio will not operate until the correct code is entered. If the customer code is lost or unavailable, use the following procedures to determine the factory backup code. This procedure requires a tone dialing telephone.

1. Turn the ignition switch to "ACC" or "ON" position.
2. Press and hold the "2" and "3" buttons until a four-digit number appears on the display. This is the radio display code; record this number.
3. Using a tone dialing telephone, call 1-800-537-5140 (USA and Canada).
4. When the computer advises, enter your dealer code or radio shop account number using the telephone keypad, then press "*."
5. When advised, enter the four-digit radio display code obtained in Step 2, then press "*." The computer will respond with the factory backup code; record this number.
6. To unlock the secured radio, refer to "Unlocking System After Power Loss" earlier in this section.

DIAGNOSIS

AUDIO SYSTEM

For audio system diagnosis, refer to SECTION 8A.

CASSETTE TAPE PLAYER AND CASSETTE

Cassette players are very susceptible to dirt and magnetized equipment. The following should be inspected as part of any diagnosis:

- Cleanliness of the capstan and the head. Since both can be reached through the tape door, they should be cleaned before proceeding with any problem diagnosis.
- To clean the head and capstan, use a cotton swab dipped in ordinary rubbing alcohol, or use a commercial cleaning cassette and follow directions on its package.
- If the head is magnetized, every cassette played in the player will be degraded or possibly erased.
- Cassette size. Tapes over 90 minutes in length (both sides total) are too thin for this equipment and could become jammed, torn, or cause damage to the equipment.

Refer to SECTION 8A for further diagnosis of the cassette tape player.

ON-VEHICLE SERVICE

RADIO

Remove or Disconnect

1. Negative (-) battery cable.
2. Heater control knobs from heater controls.
3. Heater control garnish from instrument panel center trim bezel by pulling straight out. Allow heater control garnish to hang loose.
4. Ashtray from track by pushing down on retainer and pulling out.
5. Two screws and ashtray track from instrument panel center trim bezel.
6. Four screws and instrument panel center trim bezel, sliding heater control garnish through instrument panel center trim bezel (Figure 3).

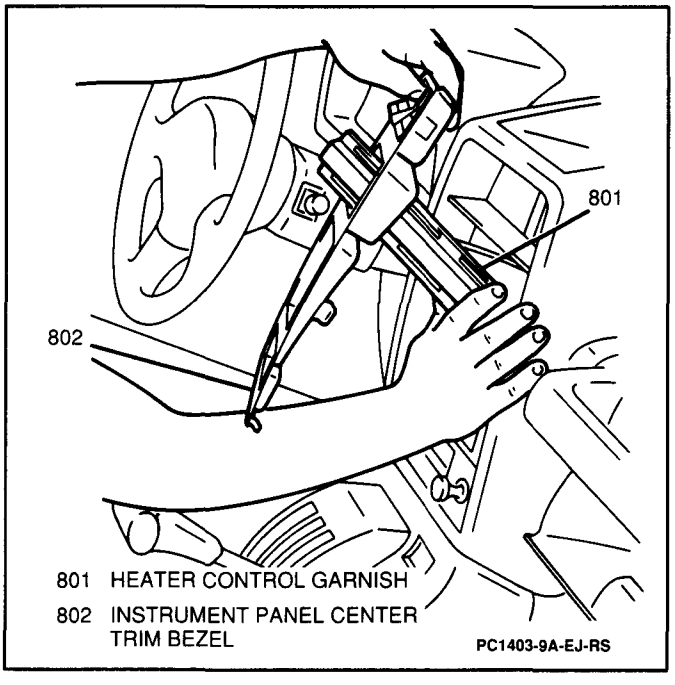

Figure 3 Removing Instrument Panel Center Trim Bezel

7. One screw from radio rear mounting bracket; access through ashtray opening.
8. Four screws and pull radio from instrument panel.

9. Antenna and radio electrical connectors from radio (Figure 4).

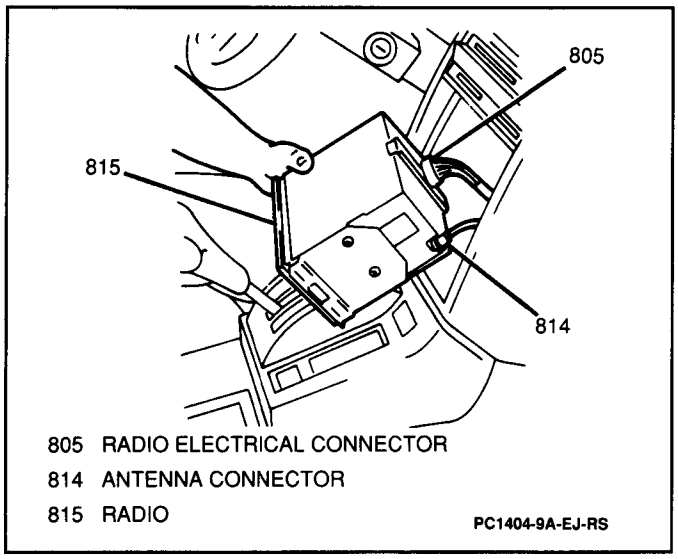

Figure 4 Radio Electrical and Antenna Connectors

10. Radio from vehicle.
11. Four screws and side mounting brackets from radio (if required) (Figure 5).

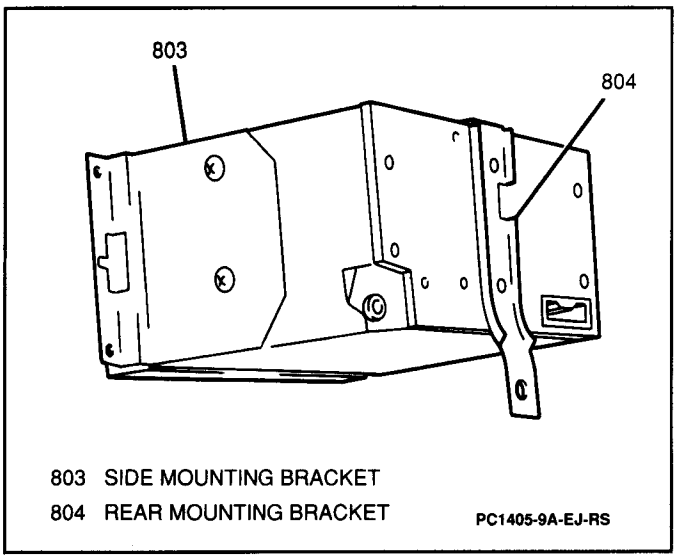

Figure 5 Side and Rear Mounting Brackets

12. One screw and rear mounting bracket from radio (if required) (Figure 5).

Install or Connect

1. Rear mounting bracket to radio (if removed); secure with one screw.
2. Side mounting brackets to radio (if removed); secure with four screws.
3. Radio electrical and antenna connectors to radio.
4. Radio to instrument panel; secure with four screws.
5. One screw to radio rear mounting bracket; access through ashtray opening.
6. Instrument panel center trim bezel, feeding heater control garnish through instrument panel center trim bezel; secure center trim bezel with four screws.
7. Ashtray track to instrument panel center trim bezel; secure with two screws.
8. Ashtray to track; push in until retainer engages.
9. Heater control garnish to instrument panel center trim bezel.
10. Heater control knobs to heater controls.
11. Negative (-) battery cable.

Tighten

- Negative (-) battery cable-to-negative (-) battery terminal retainer to 15 N·m (11 lb.ft.).

SPEAKERS

Front Speakers

Figure 6

Remove or Disconnect

1. Negative (-) battery cable.
2. Two screws and front speaker grille from instrument panel (Figure 6).

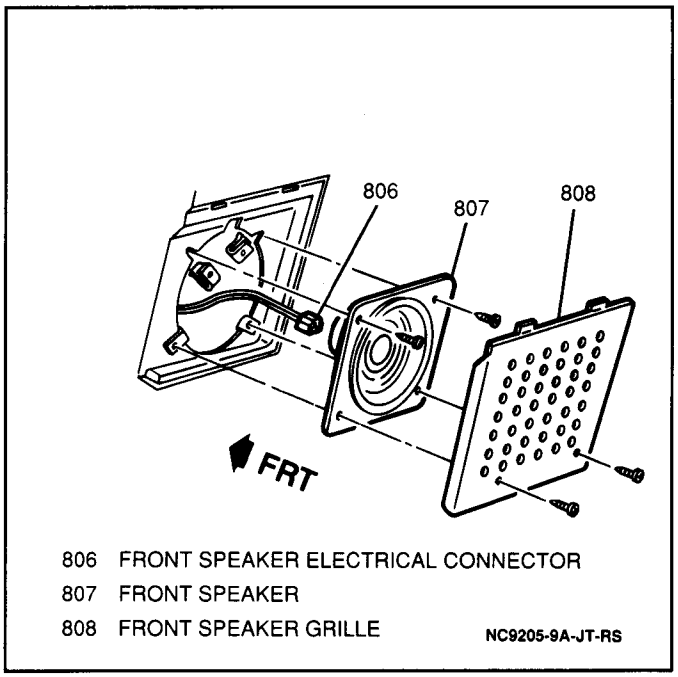

Figure 6 Front Speaker

3. Two screws and front speaker from instrument panel.
4. Front speaker electrical connector and remove speaker from vehicle.

Install or Connect

1. Front speaker to vehicle; connect front speaker electrical connector.
2. Front speaker to instrument panel; secure with two screws.
3. Front speaker grille to instrument panel; secure with two screws.
4. Negative (-) battery cable.

Tighten

- Negative (-) battery cable-to-negative (-) battery terminal retainer to 15 N·m (11 lb.ft.).

Rear Speakers

Figure 7

Remove or Disconnect

1. Negative (-) battery cable.
2. One screw from front seat belt trim bezel.
- Pull rear quarter interior trim panel from vehicle, disengaging plastic clips.
3. Three screws and rear speaker from body (Figure 7).

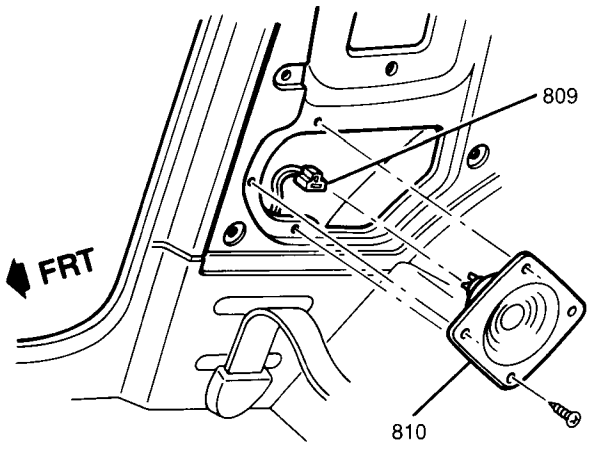

809 REAR SPEAKER ELECTRICAL CONNECTOR
810 REAR SPEAKER
NC9206-9A-JT-RS

Figure 7 Rear Speaker

4. Rear speaker electrical connector and remove speaker from vehicle.

Install or Connect

1. Rear speaker to vehicle; connect rear speaker electrical connector.
2. Rear speaker to body; secure with three screws.
3. Rear quarter interior trim panel to vehicle; press into place, engaging plastic clips.
4. Front seat belt trim bezel to vehicle; secure with one screw.
5. Negative (-) battery cable.

Tighten

- Negative (-) battery cable-to-negative (-) battery terminal retainer to 15 N·m (11 lb.ft.).

ANTENNA

Figure 8

Remove or Disconnect

1. Negative battery (-) cable.
2. Left heater duct (to aid in the installation of antenna cable).
3. Antenna cable from radio and radio mounting bracket.
- Attach a piece of rigid wire to antenna cable to aid in the removal and installation of the cable through the A-pillar.
4. Antenna mast screws.
5. Antenna mast from vehicle, guiding wire attached to antenna cable through A-pillar (Figure 8).

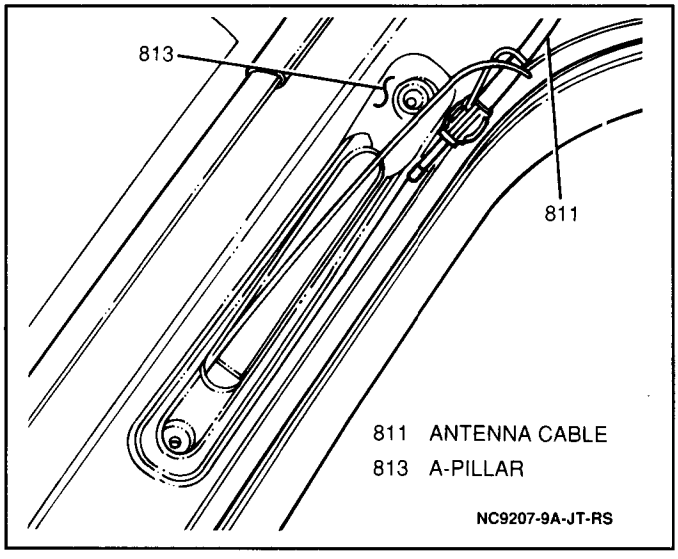

811 ANTENNA CABLE
813 A-PILLAR
NC9207-9A-JT-RS

Figure 8 Removing Antenna Cable

6. Rigid wire from antenna cable. Leave rigid wire in A-pillar to aid in antenna installation.

Install or Connect

1. Rigid wire to antenna cable.
   - Guide antenna cable and mast through A-pillar with aid of rigid wire (Figure 9).
2. Antenna mast screws.
   - Remove rigid wire from antenna cable.
3. Antenna cable to radio and radio mounting bracket.
4. Left heater duct.
5. Negative (-) battery cable.

Tighten

- Negative (-) battery cable-to-negative (-) battery terminal retainer to 15 N·m (11 lb.ft.).

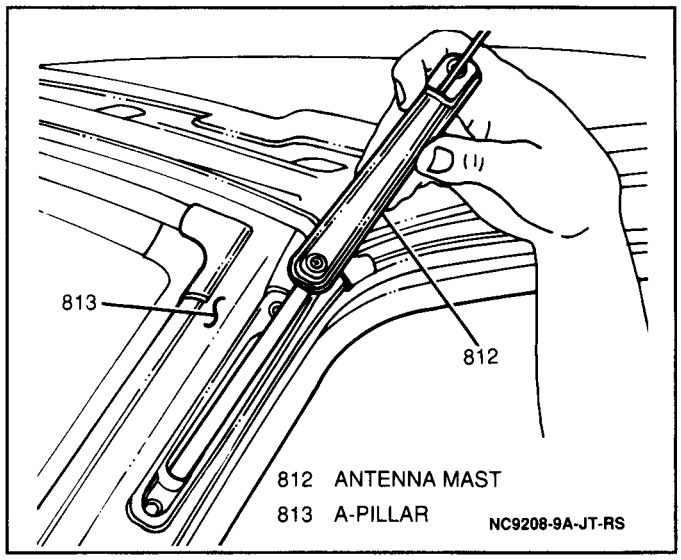

Figure 9 Installing Antenna

SPECIFICATIONS

FASTENER TORQUES

Negative (-) Battery Cable-to-Negative (-) Battery Terminal Retainer ..... 15 N·m (11 lb.ft.).

SERVICE PARTS INFORMATION

Component Name Used in Section 9A	Reference Name in Service Parts Catalog	Group Number
Antenna	Antenna ASM, Radio	9.645
Front Speakers	Speaker ASM Front	9.650
Radio	Radio, AM/FM Multi Tuner	9.650
Rear Speakers	Speaker ASM Rear	9.665

SECTION 10

Body

CONTENTS

General Body Service 10-1-1
Stationary Windows 10-2-1
Underbody 10-3-1
Bumpers 10-4-1
Body Front End 10-5-1
Doors 10-6-1
Rear Quarters 10-7-1
Body Rear End 10-8-1
Roof and Folding Top 10-9-1
Seats 10-10-1
Seat Belts 10-11-1

GEO

SECTION 10-1

GENERAL BODY SERVICE

NOTICE: The theft deterrent label found on some major sheet metal, engines and transmissions must be masked prior to painting, rustproofing, undercoating, etc. The mask must be removed following the above operations. Failure to keep the label clean and readable may result in liability for violation of Federal Vehicle Theft Prevention Standard and subject the vehicle owner to possible suspicion that the part was stolen.

NOTICE: When fasteners are removed, always reinstall them at the same location from which they were removed. If a fastener needs to be replaced, use the correct part number fastener for that application. If the correct part number fastener is not available, a fastener of equal size and strength (or stronger) may be used. Fasteners that are not reused, and those requiring thread-locking compound, will be called out. The correct torque values must be used when installing fasteners that require them. If the above procedures are not followed, parts or system damage could result.

CONTENTS

General Description 10-1-1
Fasteners 10-1-1
Lubrication 10-1-1
Theft Deterrent Labeling 10-1-2
Stripes and Decals 10-1-2
Stripe and Decal Removal 10-1-2
Stripe or Decal Installation 10-1-2
Adhesive Moldings 10-1-3
Securing Loose Moldings 10-1-3
Molding Replacement 10-1-4
Waterleak Diagnosis and Repair 10-1-4
Generalized Testing 10-1-4
Localized Testing (Spot Test) 10-1-6
Water Hose Test 10-1-6
Air Hose Test 10-1-7
Waterleak Repair 10-1-7
Windnoise Diagnosis and Repair 10-1-7
Squeak and Rattle Diagnosis and Repair 10-1-8
Anticorrosion Treatment 10-1-8
Corrosion Repair 10-1-9
Anti-Chip Coating Material 10-1-9
Metal Part Refinishing — Lacquer (If Required) 10-1-9
Metal Part Refinishing — Basecoat/Clearcoat 10-1-10
Clearcoat Repair Without Repainting 10-1-10
Basecoat/Clearcoat Preparation 10-1-11
Basecoat Application — Polyurethane Enamel 10-1-11
Clearcoat Application — Polyurethane Enamel 10-1-12
Plastic Parts Identification 10-1-12
How to Identify Plastic Parts 10-1-12
Plastic Parts Repair 10-1-17
Gouge or Puncture Repair 10-1-17
Structural Repair 10-1-18
Plastic Parts Refinishing 10-1-20
Paint Repair Systems 10-1-20
General Plastic Part Procedure 10-1-20
Procedure 1 10-1-21
Procedure 2 10-1-21
Procedure 3 10-1-21
Procedure 4 10-1-21
Procedure 5 10-1-21
Availability of Colors for Painting Interior Plastic Parts 10-1-22
Body Panel Adjustment and Alignment 10-1-22
Specifications 10-1-24
Service Parts Information 10-1-24

GENERAL DESCRIPTION

The information contained in this section applies to the vehicle as a whole. References will be made to sections that deal with specific areas of the vehicle.

FASTENERS

Many aluminum components are used on present models. Aluminum in contact with steel may corrode rapidly if not protected by special finishes or isolators. There are three special finishes which meet GM specifications: GM 6111-M (gray), GM 6047 (black) or GM 6147-M (black). These special fasteners differ in color from the standard metric fasteners, which are medium blue, in order to make them easily identifiable.

NOTICE: When replacing fasteners, avoid substituting otherwise similar fasteners in locations which require the use of GM 6111-M, GM 6047, or GM 6147-M type special fasteners for aluminum components. Failure to follow this precaution may result in premature corrosion of the sheet metal in the areas mentioned above.

LUBRICATION

Mechanical parts having contact with surfaces in relative motion with other body parts are lubricated during assembly. To maintain ease of operation, refer to SECTION 0B for the maintenance service schedule and a list of parts to be lubricated and their proper lubricants.

THEFT DETERRENT LABELING

Federal law requires General Motors to label certain parts, on selected vehicles, with the vehicle identification number (VIN). This standard is intended to reduce the cases of motor vehicle thefts by assisting in the tracing and recovery of parts from stolen vehicles.

The theft deterrent label is permanently affixed to an interior surface of the part and contains the complete VIN. The label on replacement parts includes the letter R, the manufacturer's logo, and the symbol "DOT."

Important

- THEFT DETERRENT LABELS ARE NOT TO BE DEFACED, REMOVED OR COVERED OVER. The labels must be shielded from paint, rustproofing and undercoating (dealer preparation included).

  The parts involved are:
  - Front and rear bumper assemblies.
  - Hood.
  - Right and left doors. (The certification label on the driver's door qualifies as a theft deterrent label.)
  - Right and left quarter panel assemblies.
  - Rear door.
  - Right and left front fenders.

STRIPES AND DECALS

Stripes and decals adhere to a painted surface using pressure sensitive adhesive.

The use of a wetting solution aids the technician in lifting and positioning the stripe or decal during installation. A wetting solution also ensures a better bond between stripe or decal and panel(s).

Stripe or decal replacement involving collision damage, or damage to underlying painted surface, requires that metal repair and/or refinishing operations be completed before stripes or decals are installed.

NOTICE: Freshly painted surfaces must be allowed to dry thoroughly before installing stripe or decal. Residual solvents in fresh painted surfaces can lead to subsequent blistering problems if stripe or decal is applied before complete release of solvents.

The striping material will highlight vehicle surface imperfections. Therefore, all dings, rough metal, paint defects and uneven two-tone paint break lines must be eliminated before stripe/decal application can take place.

Body surfaces and decals must be maintained between 21 to 38°C (70 to 100°F) prior to installation. Auxiliary heat sources to warm the body surfaces and decals are required if the temperature is below 21°C (70°F). NEVER APPLY DECALS WHEN TEMPERATURES ARE BELOW 21°C (70°F). If the body surface temperature is below 21°C (70°F), the decal may not adhere to the body surface properly.

Stripes and decals may be applied to the vehicle surface with or without the use of a wetting solution. A wetting solution must be used when applying large stripe and decal packages.

Stripes or decals that are applied on flexible surfaces (fascias, etc.) must be applied using a wetting solution. Flexible materials often release gases which will cause bubbles to form under the decal. The use of a wetting solution during application of decals will help reduce the formation of bubbles.

STRIPE AND DECAL REMOVAL

1. Remove necessary moldings or trim, molding attaching clips, handles, side marker lamps and/or other stripe or decal overlapping parts.
2. Clean repair surfaces, adjacent panels and openings as required.

   NOTICE: To avoid damaging underlying paint finish, do not use pointed or sharp instruments for removal of stripe or decal from panel(s).
3. Remove stripe or decal by starting at one edge and peeling stripe or decal from panel surface. Application of heat to stripe or decal at point of removal will aid the removal operation.
4. Remove all traces of adhesive residue from painted surfaces with a silicone, wax or grease remover solvent such as Prep-Sol, Acryli-Clean, Pre-Kleano, or equivalent.
5. If a new stripe or decal is not being applied, replace any moldings, trim, clips, handles, side marker lamps or any other parts that may have been removed for stripe or decal removal.

STRIPE OR DECAL INSTALLATION

The following equipment and materials are necessary in making a quality stripe or decal application. Equivalent products may be used.

- Wetting solution — a foaming type window cleaner that does not contain ammonia or prepare a solution by mixing 7.4 ml (0.25 fl.oz.) of liquid detergent per 0.95 liter (1 quart) of water.
- Silicone, wax or grease remover — Prep-Sol, Pre-Kleano, Acryli-Clean, or equivalent.
- Isopropyl alcohol.
- Squeegee — 75 to 100 mm (3 to 4-inches) wide, with a plastic or hard rubber construction. Deburr any sharp or rough edges to prevent scratching of the stripe or decal.
- Water bucket and sponge or spray bottle.
- Sandpaper — #600 grit or finer, wet or dry type.
- Heat gun or infrared heat lamp.
- Clean, lint-free wiping rags.
- Sharp knife or razor blade.
- Scissors.
- Fine pin or needle.
- Marking pencil.

NOTICE: To prevent possible vehicle, stripe or decal damage, always refer to manufacturer's packaged instructions when installing stripes and/or decals.

1. Remove necessary moldings or trim, molding attaching clips, handles, side marker lamps and/or other stripe or decal overlapping parts.
2. Clean painted surface with a silicone, wax and grease removing solvent such as Prep-Sol, Acryli-Clean, Pre-Kleano, or equivalent. Wipe surface with a clean cloth and allow to dry.

Important

- If area where stripe or decal is to be applied has been refinished, remove any imperfection that would show through the stripe or decal.

3. Clean area where stripe or decal is to be applied with a 50-50 mixture (by volume) of isopropyl alcohol and water.
4. Wipe panel surface with a clean cloth while solvent is still wet and allow to dry.
5. Apply wetting solution to area where stripe or decal is to be installed. Remove backing material of stripe or decal as necessary; put wetting solution on adhesive side of stripe or decal.
6. Apply stripe or decal to panel. Wetting solution will allow movement of stripe or decal for proper positioning.
7. Working from the center where possible, squeegee stripe or decal into position. Application of additional wetting solution may be necessary to ease installation of stripe or decal. Application of the soapy wetting solution on the top side of the stripe or decal will ease the pull of the squeegee on the stripe or decal and help to eliminate damage to the stripe or decal.
8. Apply heat to stripe or decal at recessed areas. Press stripe or decal into recess to obtain firm bond.
9. Inspect stripe or decal from critical angle using adequate light reflection to detect any irregularities that may have developed during installation. Remove all air bubbles by piercing with a safety pin, needle or tool with the same size piercing tip. NEVER use a razor blade or knife edge. Pierce the bubble on its outer edge and force the air out from the opposite edge with the blade of the squeegee.
10. Install previously removed parts and clean as required.

ADHESIVE MOLDINGS

Body side moldings that are attached to body panels with adhesive tape require preparation prior to replacement. To ensure a good molding replacement (new or old moldings), the panel surface should be warm, 21 to 32°C (70 to 90°F), clean and free of any wax or oily film. Emblems are attached to the body panels in the same manner as bodyside moldings. To replace or secure loose emblems, follow the service procedures used for body side moldings.

SECURING LOOSE MOLDINGS

Figure 1

1. Wash affected area with soap and water and wipe dry. Wipe panel and adhesive side of molding with a clean rag using oil-free naphtha or alcohol. If molding has pulled loose from adhesive backing (tape remains on body panel), do not remove tape from body. Clean back of molding and tape on body with oil-free naphtha or alcohol.
2. To be certain that the molding is straight, masking tape may be applied as a molding guide (Figure 1). A straightedge may also be used in most cases.

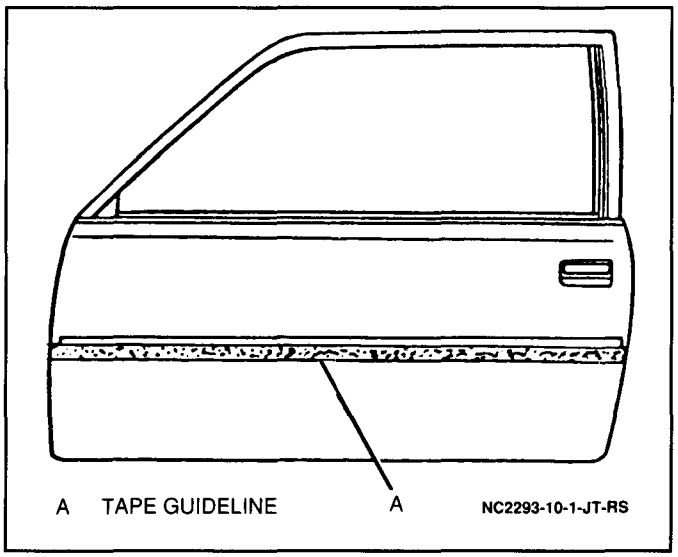

Figure 1 Adhesive Body Side Molding Repair

3. Apply Loctite® 414 adhesive GM P/N 12345093, or equivalent, to back of molding and press in place. Apply constant pressure to molding for 30 seconds or until a firm bond has been made.

MOLDING REPLACEMENT

Figure 1

1. Wash affected panel area with soap and water and wipe dry. Remove all traces of adhesive from body panel and back of molding using oil-free naphtha or alcohol.
2. Mark proper position of molding with a length of masking tape (Figure 1). Use adjacent moldings as a guide if applicable.
3. If vehicle body is below 21°C (70°F) due to shop temperature or outside temperature, warm the body panel with a heat gun before proceeding with Step 4.
4. Apply a double-coated acrylic foam tape such as 3M Super Automotive Attachment Tape P/N 06380 (which has a white backing) or P/N 06382 (which has a gray backing), or equivalent, to the molding.
5. Align molding to tape guideline and press firmly in place.

WATERLEAK DIAGNOSIS AND REPAIR

GM vehicles are designed to operate under normal environmental conditions. The design criteria for sealing materials and components takes into consideration the sealing forces required to withstand natural elements. These specifications do not, and cannot, take into consideration all artificial conditions (i.e., high-pressure car washes).

The watertest procedure has been correlated to natural elements and will determine the ability of a car to perform under normal operating conditions.

Repairing body waterleaks is a problem of proper testing, diagnosis, and repair through adjustment of misaligned components and/or application of proven repair materials. The first step in waterleak diagnosis is finding the conditions under which the leak occurs (for example, leak noticed only when parked on an inclined drive or water in spare tire compartment).

If the general leak area can be found, the exact entry point can be quickly isolated by use of a localized test such as a water hose or air hose. If the leak source is not obvious, the generalized testing method using watertest equipment such as watertest stands (Figure 2) should be used. It may be necessary to remove some interior trim panels or components to locate and confirm repairs.

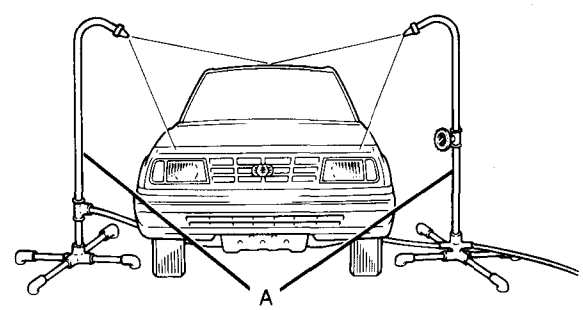

Figure 2 Watertest Stands Positioned for Front End Watertest

GENERALIZED TESTING

Figure 3

Specifications for construction and placement of the watertest stands are shown in Figure 3.

If the specified water pressure of 155 kPa (22 psi) cannot be obtained because of a local situation, both test stands may be moved toward the body until water spray overlap can be obtained.

WATERTEST STAND SPECIFICATIONS

TYPE OF NOZZLE — FULL CONE SPRAY WITH 60° INCLUDED ANGLE — "FULL JET" SPRAY NOZZLE NO. 1/2 GG-25 OR EQUIVALENT.

NOZZLE HEIGHT — APPROXIMATELY 1 600 mm (63") FROM FLOOR

VOLUME OF FLOW — 14 LITERS (3.7 GALLONS) PER MINUTE

PRESSURE — 155 kPa (22 PSI) MEASURED AT NOZZLE

WINDSHIELD AND FRONT BODY PILLAR — APPROXIMATELY 30 DEGREES DOWN, 45 DEGREES TOWARDS REAR AND AIMED AT CORNER OF WINDSHIELD

SIDE — APROXIMATELY 30 DEGREES DOWN, 45 DEGREES TOWARDS REAR AND AIMED AT CENTER OF REAR DOOR OR REAR QUARTER.

BACK WINDOW AND REAR COMPARTMENT LID — APPROXIMATELY 30 DEGREES DOWN, 30 DEGREES TOWARDS FRONT AND AIMED APPROXIMATELY 600 mm (24") FROM CORNER OF BACK WINDOW.

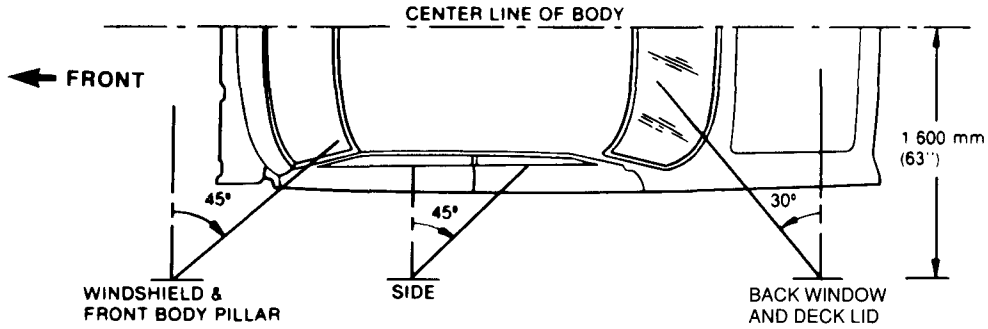

NC1003-10-1-S-RS

Figure 3 Watertest Stand Specifications — Typical

LOCALIZED TESTING (SPOT TEST)

Localized testing may be made with either water or air. Begin test at the base of the suspected area and continue up slowly until the leak is located.

Important

- Pinpoint the leak area before any repair is made. Random repair may only temporarily restrict water entry and make future diagnosis and repair more difficult. Continue localized testing in the same general area to confirm that all leaks have been located.

Water Hose Test

Figures 4 and 5

1. Have an assistant inside the car to detect the actual leak points.
2. Use an unrestricted water flow (no nozzle) (Figures 4 and 5).

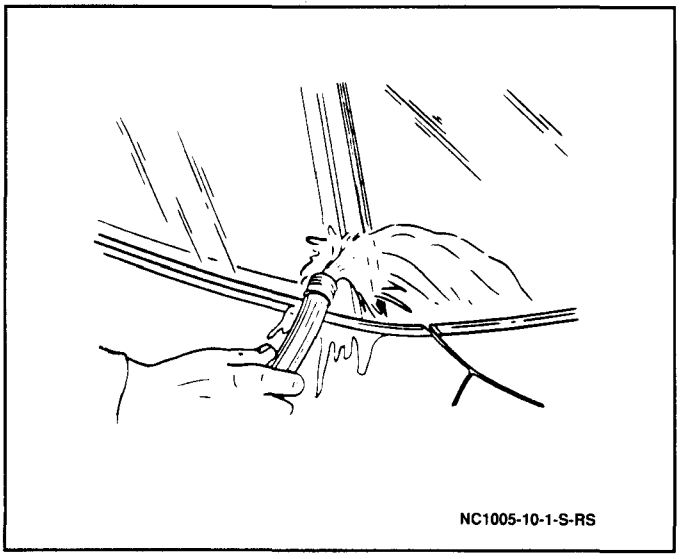

Figure 4 Water Hose Test of Windshield Pillar

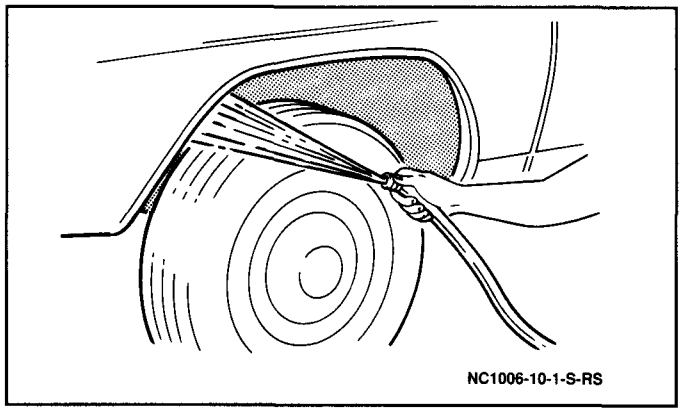

Figure 5 Water Hose Test of Wheelhousing

3. Begin at base of suspected leak area and move upward slowly.

Air Hose Test

Figure 6

1. Apply bubble solution (liquid soap) to suspected area.
2. Apply air pressure with an air hose from inside the vehicle. Do not exceed 205 kPa (30 psi) (Figure 6).

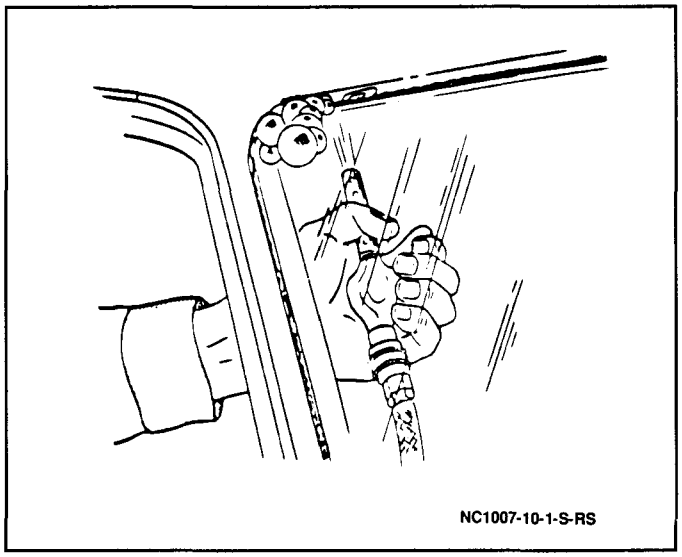

Figure 6 Air Hose and Bubble Solution Test of Windshield Sealant

3. Watch for outside bubbles at suspected leak area.

WATERLEAK REPAIR

Figure 7

To locate the exact leak point or to repair the leak, it may be necessary to remove some interior trim panels or components. Refer to Figure 7 for proper repair materials.

After completion of any waterleak repair, the general area should be retested using the watertest stand. Do not use air hose or water hose to test repaired areas as the repair material may dislodge under abnormal pressure.

WINDNOISE DIAGNOSIS AND REPAIR

CAUTION: FOR SAFETY REASONS an assistant should drive the car while the technician checks for the location of the reported condition(s).

To analyze a reported windnoise condition, a test drive in the vehicle is necessary due to the many variables that could singularly or collectively be attributed to creating the objectionable noise condition.

LEAK AREAS	REPAIR MATERIALS
WINDSHIELD, BACK WINDOW AND QUARTER WINDOW	URETHANE ADHESIVE CAULKING KIT GM P/N 12345633, OR EQUIVALENT
METAL JOINTS	3M BRUSHABLE SEAM SEALER P/N 08656, OR EQUIVALENT, WHICH CAN BE PAINTED
VENTILATION DUCTS AND DRIP MOLDINGS	3M AUTO BEDDING AND GLAZING COMPOUND P/N 08509, OR EQUIVALENT
SMALL CRACKS AND PIN HOLES	3M DRIP-CHECK SEALER P/N 08531, OR EQUIVALENT
LARGE HOLES	3M AUTOMOTIVE JOINT AND SEAM SEALER P/N 08648, OR EQUIVALENT
WEATHERSTRIPS	3M WEATHERSTRIP ADHESIVE P/N 08011, OR EQUIVALENT
BOLTS, STUDS AND SCREWS	3M STRIP-CALK P/N 08578, OR EQUIVALENT

NC1008-10-1-JT-RS

Figure 7 Recommended Materials for Waterleak Repair

Important

- Often there is one primary leak source and one or more secondary leaks that contribute to the noise condition. Repairing only one of the contributing leak sources may not completely repair the total condition, only reduce it.

The following items should be taken for utilization by the technician during the test drive to aid in pinpointing and marking area(s) of the leak:

1. Mechanic's stethoscope or vacuum hose.
2. Masking tape — 51 mm (2-inches) wide.
3. Strip caulk.
4. Screwdriver.

A regular route for the road test should already have been chosen. The test road should include smooth and straight streets that run in all four directions, (north, south, east, and west). It should be an area where there is little traffic or noise that would interfere with the test.

The vehicle should be driven at the speed in which the noise was noticed by the customer or until it is heard. However, safe, legal speeds should never be exceeded.

First determine if the noise is an objectionable windnoise as opposed to normal sounds.

If noise can be heard with the door window lowered while the vehicle is being driven, it is external windnoise.

Locating an external windnoise condition can be accomplished by taping various moldings and gaps until the noise is eliminated to pinpoint the exact cause of the noise.

If the noise cannot be heard with the windows lowered, a body seam is leaking or a sealing surface such as a window-to-weatherstrip or door weatherstrip-to-door is poorly sealed. Internal windnoise is air leaving the body.

The first step in locating the source of internal windnoise is to tape off the body lock pillar pressure relief valves. This will cause air pressure to build up inside the vehicle and enhance the windnoise. Trace the suspected seal using the stethoscope to locate the leak area.

Temporarily repair the condition with masking tape (Figure 8). Adjust tape as required. Continue testing to determine if noise has been eliminated or other leak areas exist.

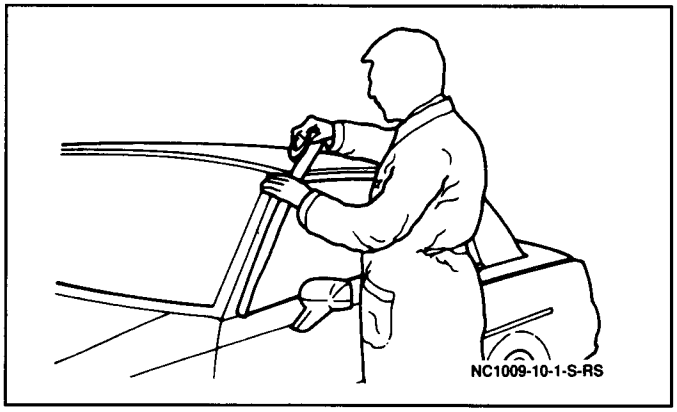

Figure 8 Temporary Repair With Masking Tape

When all reported leak conditions have been located, return to shop and make permanent repairs utilizing proper alignment techniques and sealing materials as required.

SQUEAK AND RATTLE DIAGNOSIS AND REPAIR

Squeaks and rattles are caused by improperly controlled relative motion between components. There are three ways to prevent the squeak or rattle:

1. Attach component securely so there is no relative motion during operation.
2. Separate components so there is no contact under operating conditions.
3. Insulate components so that no squeaks or rattles occur with relative motion between components. Low uniform friction surfaces can be provided to eliminate "stick-slip" motion.

ANTICORROSION TREATMENT

CAUTION: When applying sound deadeners, due care and preventative measures must be exercised to prevent any materials from being sprayed into door and quarter panel mechanisms such as door locks, window run channels, window regulators and seat belt retractors, as well as any moving or rotating mechanical or suspension parts on the underbody. After material application, be sure all body drain holes are open.

To provide for rust resistance, special anticorrosion materials are used on interior and exterior surfaces of metal panels. These materials include special metals such as one-sided and two-sided galvanized zincrometal and zinc-iron alloy steels.

Special metal conditioners and primers are used on interior and exterior surfaces along with protective waxes on interior surfaces in areas where moisture might accumulate. Sealers are applied along exposed joints and moisture-repelling asphaltic sound deadeners are applied inside wheelhousings and doors and on some underbody components.

Any procedure that disturbs these special treatments, such as panel replacement or collision damage repair operations, may leave the metal unprotected and result in corrosion. Therefore, proper recoating of these surfaces with service-type anticorrosion material is essential.

Metal conditioners and primer coatings are applied to all metal panels at the time of manufacture. After repair and/or replacement parts are installed, all accessible bare metal surfaces must be treated with metal conditioner and reprimed using an acrylic chromate material. This operation is to be performed prior to the application of sealers, waxes, deadeners, or antirust compounds.

Sealers are applied to specific joints during manufacturing. These sealers are intended to prevent water and dust from entering the car and also perform as anticorrosion barriers. Sealers are applied to such areas as door hem flanges, wheelhousings, quarter panels, floor, cowl, roof and various other panel-to-panel attaching points. The originally sealed joints are obvious, and any damage to these sealed locations should be corrected by resealing.

Attaching points of new replacement panels should be resealed. Replacement panels and doors will also require sealing in the hem flange areas.

Flanged joints, overlap joints, and seams should be sealed using a quality sealer of medium-bodied consistency. Sealer used must retain its flexible characteristics after curing.

Open joints which require bridging of sealer to close a gap should be sealed using a heavy body caulking material. Follow label directions for material selected.

Color application may be required to restore repaired areas such as hood, fenders, doors, quarters, and roof to original appearance. When this is necessary, conventional refinishing preparation, undercoat buildup, and color application techniques should be followed.

Deadening materials (spray-on type) are used on various metal panels to provide corrosion resistance, joint sealing and to control the general noise level inside the passenger area of the car. When deadeners are disturbed because of damage, removed during repair operations, or a new replacement panel is installed, the deadener material must be replaced by a service equivalent material. The application pattern and location of deadener materials can be determined by following the original production installation.

Anticorrosion compounds are light-bodied materials designed to penetrate between metal-to-metal surfaces, such as pinch-weld joints, hem flanges, and integral panel attaching points where metal surfaces are difficult to coat with conventional undercoating materials. Materials suited for this type of application are 3M Rust Fighter-1 P/N 08892, or equivalent.

The sequence of application steps for anticorrosion materials is as follows:

1. Clean metal before primer application.
2. Apply primer (acrylic chromate).
3. Apply sealers (at all previously sealed joints).
4. Apply color in areas where color is required, such as hem flanges, exposed joints, and underbody components.
5. Apply deadeners (as indicated by original application pattern).
6. Apply anticorrosion compounds.
7. Apply underbody rustproofing material.

Cleaning of interior and underbody panel surfaces is necessary when galvanized or other anticorrosion materials have been burned off during welding or heating operations. Removal of the residue left from burning will require additional care in such areas as interior surfaces of box-type construction and when configurations of the metal panels limit access to interior surfaces. One or more of the following methods will remove the residue.

CAUTION: Standard shop practices, particularly eye protection, should be followed during these operations to avoid personal injury.

1. Scraping can be used where access is possible. If a standard putty knife or scraper will not fit into the affected area, fabricate a small, flexible scraper from a narrow piece of sheet metal.
2. A jet of compressed air will remove most residue and could be most effective in limited-access areas. Eye protection is absolutely necessary in an operation of this type.
3. Sandblasting is most effective and should be used when the equipment is available and when the metal panel to be worked on is easily accessible. Sandblasting is an excellent method for cleanup and preparation of open joints, underbody components, and hem flange areas.
4. Wire brushing (power and by hand).
5. Sandpaper and steel wool can be used when the metal panel can be accessed easily.

CORROSION REPAIR

Prior to replacing exterior body parts or assemblies, check condition of paint on all covered or hidden interior surfaces. If corrosion is found in these areas, proceed as follows:

1. Remove corrosion with suitable wire brush, abrasive or liquid corrosion removing agent. Follow label directions.
2. If necessary, wash with detergent, rinse and dry.
3. Apply a heavy coating of anticorrosion compound, or equivalent, to all cleaned hidden surfaces before installing exterior body parts. Also, apply anti-corrosion compound to all inner surfaces of exterior body parts being installed.

ANTI-CHIP COATING MATERIAL

A chip resistant plastisol material is applied to specific lower areas of the body prior to color coat application. If the production applied material requires replacement, a chip resistant air dry vinyl plastisol that is solvent borne and sprayable is available for field use.

The following material can be used for refinishing operations. Follow material manufacturer's label directions for application.

1. Acme Gravel Guard #559, or equivalent — 1 quart container.
2. Rodgers Vinyl Gravel Guard #4559, or equivalent — 1 quart container.
3. Sherwin-Williams Vinyl Gravel Guard #G1W295, or equivalent — 1 quart container.
4. Tuff-Kote #1077, or equivalent — 1 quart container.

In addition to the previous materials, the following equipment is necessary for repair:

1. Sandpaper — #80 grit.
2. Portable heat lamp or heat gun.
3. Extension cord.
4. Clean shop towel.
5. Conventional hand spray gun with pressure feed cup attached (DeVilbiss, J.G.A., Binks, or equivalent).
6. Putty knife.

METAL PART REFINISHING — LACQUER (IF REQUIRED)

CAUTION: Many paint repair systems require additives containing isocyanates. It is essential that all recommendations and warnings listed on the container label for materials selected be followed. It is mandatory that adequate respiratory protection such as air line respirators with a full hood be worn. Such protection should be worn during the entire painting process. Persons with respiratory problems or those allergic to isocyanates must not be exposed to isocyanate vapors or spray mist.

Metal service replacement parts (or assemblies) are painted with a high-bake factory primer. For proper adhesion of color coats in service, the following refinishing steps are necessary.

1. Clean part with a silicone, wax and grease removing solvent such as Prep-Sol, Pre-Kleano, Sher-Will-Clean, Acryli-Clean, or equivalent.
2. Scuff-sand panel lightly with wet or dry #400 sandpaper and water; avoid cut-throughs.
3. Reclean part and apply sealer to entire part.
4. If factory primer coat was cut through, apply metal conditioner to exposed bare metal; follow label directions.
5. Apply primer-surfacer to entire part; allow to dry thoroughly before sanding. Follow label directions for drying time.
6. Sand primer-surfacer using wet or dry #400 sandpaper and water. Do not sand sealer.
7. Reclean part and apply color coats to part.
8. Follow label directions for drying time before compounding.
9. Compound part by hand or with power equipment.
10. Nonsealing polish may be applied after rub-out if desired. Waxes, however, should not be applied until the paint finish has aged at least two months.

METAL PART REFINISHING — BASECOAT/CLEARCOAT

CAUTION: Many paint repair systems require additives containing isocyanates. It is essential that all recommendations and warnings listed on the container label for materials selected be followed. It is mandatory that adequate respiratory protection such as air line respirators with a full hood be worn. Such protection should be worn during the entire painting process. Persons with respiratory problems or those allergic to isocyanates must not be exposed to isocyanate vapors or spray mist.

Basecoat/clearcoat paint is factory applied in three layers: a cathodic immersion primer, base color of high solids acrylic enamel (basecoat), and a clear acrylic top coat (clearcoat) to give the finish a high-gloss look.

CLEARCOAT REPAIR WITHOUT REPAINTING

Figure 9

If the damage or imperfections can be sanded or polished out without reaching the color coat, you do not have to repaint (Figure 9).

1. Thoroughly wash repair area with a mild detergent.
2. Apply a small amount of medium to fine machine rubbing compound to repair area and smear evenly with compounding pad.
3. With polisher running at approximately 1,700 rpm, compound repair area. Keep pad flat against panel while applying light pressure. Feature lines and panel edges should be hand-rubbed to avoid burn-through. Check repair area frequently and if necessary, add more compound.
4. If sanding is required, proceed to Step 6. If not, apply polish to repair area and smear evenly with polishing pad.
5. Keep pad flat to panel and allow weight of polisher to do the work. Use polish sparingly to achieve original shine. Machine or hand polish repair area first, then blend in with rest of panel.
6. If repair is near adjacent panels, mask adjacent panel to protect against sand scratches and burn-through of panel edges.
7. Saturate a piece of micro-fine sandpaper in a container of water and attach to a sanding pad. The addition of a small amount of liquid detergent to the water will improve wet-out and sanding performance.
8. Keep repair area wet while sanding. Sand lightly and evenly in one direction only, using straight strokes.

Important

- Frequently wipe or squeegee repair area to determine when defect has been removed. Sand only enough clearcoat to remove defect. Sanding below clearcoat requires repainting.

9. Using a clean cloth, wipe repair area clean of water and clearcoat residue.
10. Compound and polish as necessary. Often, hand compounding and polishing of a small repair area is all that is necessary to restore appearance.

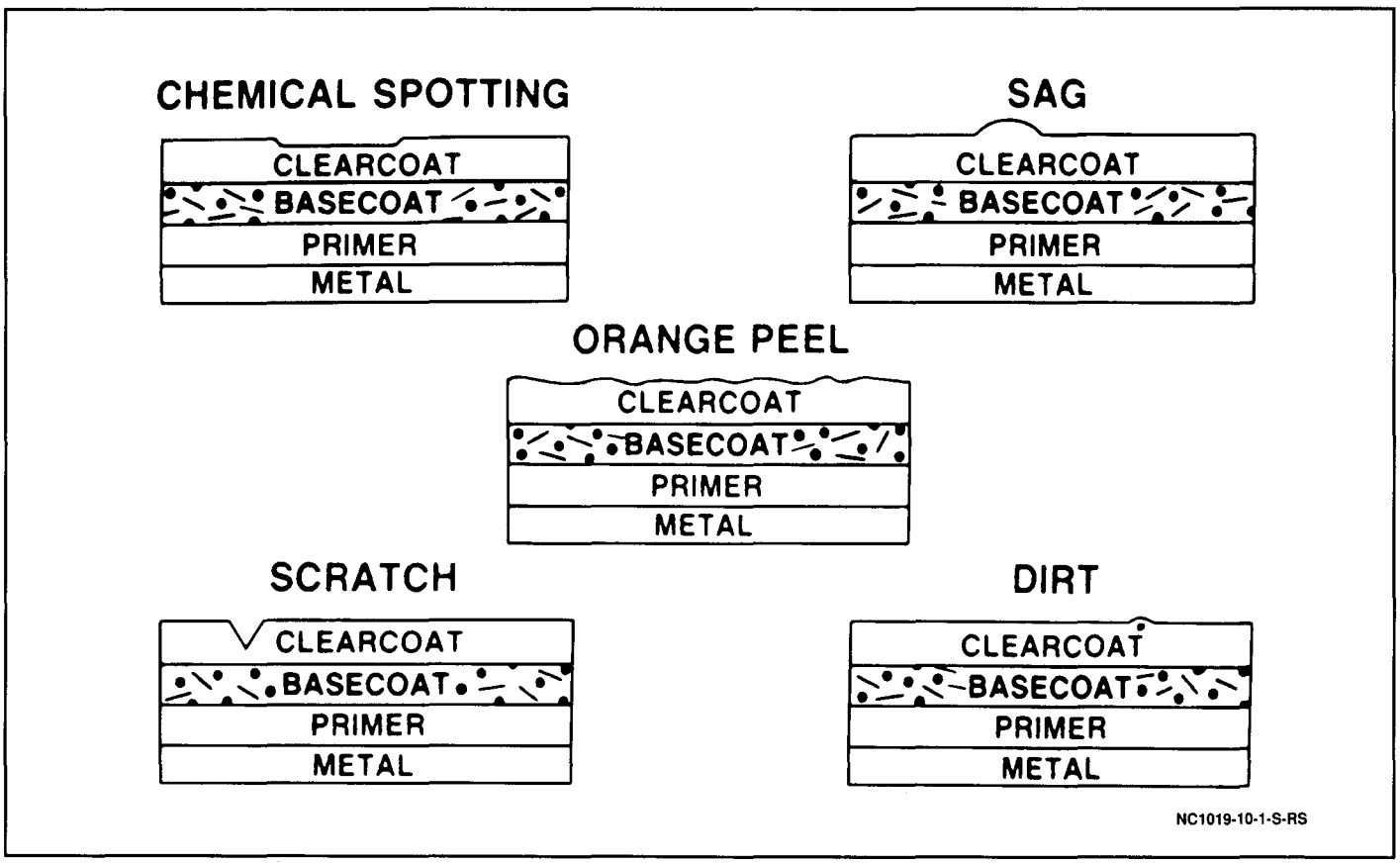

Figure 9 Minor Paint Defects That Can Be Repaired Without Repainting

BASECOAT/CLEARCOAT PREPARATION

CAUTION: Many paint repair systems require additives containing isocyanates. It is essential that all recommendations and warnings listed on the container label for materials selected be followed. It is mandatory that adequate respiratory protection such as air line respirators with a full hood be worn. Such protection should be worn during the entire painting process. Persons with respiratory problems or those allergic to isocyanates must not be exposed to isocyanate vapors or spray mist.

1. Wash affected area with detergent and water.
2. Clean with grease, wax and silicone removing solvent such as Acryli-Clean, Pre-Kleano, Prep-Sol, or equivalent.
3. Repair and featheredge damaged areas.
4. Treat metal surface with metal conditioner and conversion coating. Allow to dry.
5. Apply primer-surfacer. Dry 20 to 30 minutes.
6. Sand basecoat paint area with #400 grit sandpaper. (For clearcoat only, wet sand with #600 grit or finer sandpaper or hand compound.)
7. Clean with solvent and tack wipe.

Important

- Do not do Step 8 if the basecoat enamel used for repair does not require it. Always refer to basecoat enamel manufacturer's label directions.

8. Apply one or two coats of adhesion promoter:

- Within moldings or breaklines.
- On adjacent panel 102 to 105 mm (4 to 6-inches) if repair is not confined and is beyond area to be covered by clearcoat.
- Allow to flash dry at least 30 minutes before applying clearcoat.

BASECOAT APPLICATION — POLYURETHANE ENAMEL

CAUTION: Many paint repair systems require additives containing isocyanates. It is essential that all recommendations and warnings listed on the container label for materials selected be followed. It is mandatory that adequate respiratory protection such as air line respirators with a full hood be worn. Such protection should be worn during the entire painting process. Persons with respiratory problems or those allergic to isocyanates must not be exposed to isocyanate vapors or spray mist.

1. Activate enamel material per manufacturer's instructions.
2. Mix thoroughly.
3. Reduce basecoat per manufacturer's instructions.
4. Check viscosity with a Zahn number 2 viscosity cup, or equivalent.
5. Spray two or more medium wet coats, 15 to 20 minutes apart to achieve full hiding and color match.
6. Cure per manufacturer's instructions.

CLEARCOAT APPLICATION — POLYURETHANE ENAMEL

CAUTION: Many paint repair systems require additives containing isocyanates. It is essential that all recommendations and warnings listed on the container label for materials selected be followed. It is mandatory that adequate respiratory protection such as air line respirators with a full hood be worn. Such protection should be worn during the entire painting process. Persons with respiratory problems or those allergic to isocyanates must not be exposed to isocyanate vapors or spray mist.

1. Activate materials per manufacturer's instructions.
2. Mix thoroughly.
3. Reduce clearcoat per manufacturer's instructions.
4. Check viscosity with a Zahn number 2 viscosity cup, or equivalent.
5. Spray at 345 kPa (50 psi) gun pressure. Apply two medium-wet coats, 15 to 20 minutes apart.

- Cover entire panel wherever possible.
- When there are no breaklines, blend the spray within the adhesion promoter area.

Important

- Clean the spray equipment with lacquer thinner immediately after use.

PLASTIC PARTS IDENTIFICATION

HOW TO IDENTIFY PLASTIC PARTS

Figures 10 through 14

Specific plastics used on this vehicle are shown in Figures 12 through 15. To identify other plastics, use the following procedure:

1. Look on the back side of the part for the International Organization for Standardization Code marking (Figure 10). If no code marking is found on the part, refer to Figure 11 for the locations and types of exterior plastic trim parts.

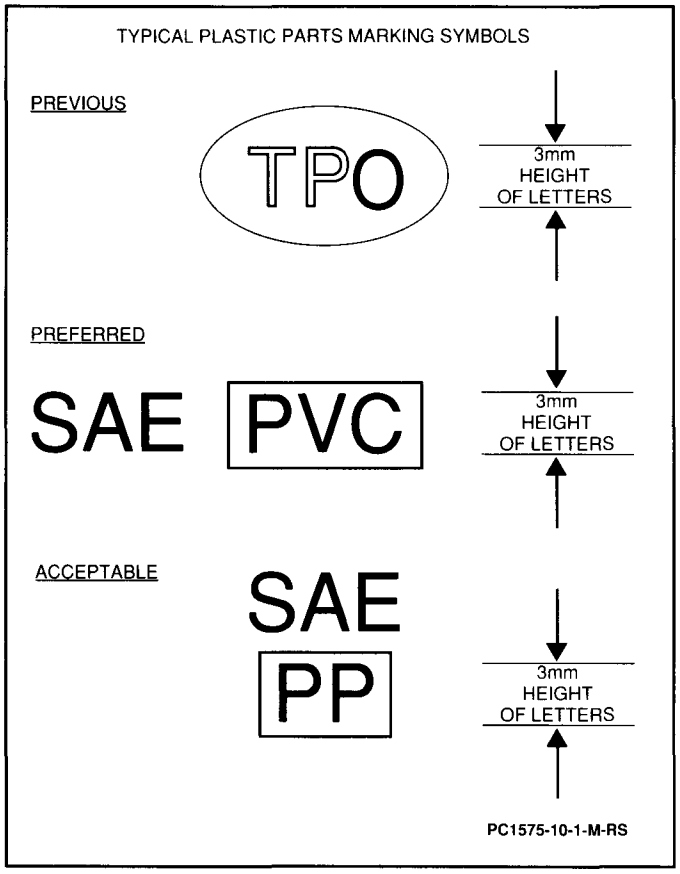

Figure 10 Typical Plastic Parts Marking Symbol

2. Once the code is identified, move to the "Typical Paint Repair System" column and use the applicable repair system procedures (Figures 12 and 13).
3. If no code is found, group the plastic parts in the following manner:

- When there is doubt regarding the makeup of rigid exterior plastic parts, they should be treated as fiberglass.
- Flexible (semi-rigid) exterior plastic parts require the addition of a flexible additive to the paint material.
- Rigid interior plastic parts can be painted. The majority of hard plastic parts require a polypropylene primer prior to applying the primer-surfacer, color and/or clearcoat.
- Flexible (soft) interior plastic parts require the use of a vinyl interior color paint material. As a second choice, use an acrylic lacquer interior color paint with a flexible additive.
- Interior soft vinyl (PVC) parts require a vinyl interior color paint material also.

CAUTION: General Motors does NOT recommend using a plastic "Burn Test" to distinguish different types of plastics. This test produces vapors that can be harmful to your health.

Abrasion Test

Certain plastics, of the polyolefin family (commonly identified by the symbols TPO, E/P, PP and EPDM), require the use of 3M Polyolefin Adhesion Promoter P/N 05907, or equivalent, after sanding operations and before the application of structural adhesive (bonding epoxy). One test to determine whether or not a substrate is a polyolefin is the sanding or abrasion test. Sand an area near the damaged area and study the sanding characteristics. If the material sands cleanly, the material is not polyolefin. If the material melts or smears when sanded, then a polyolefin adhesion promoter is required.

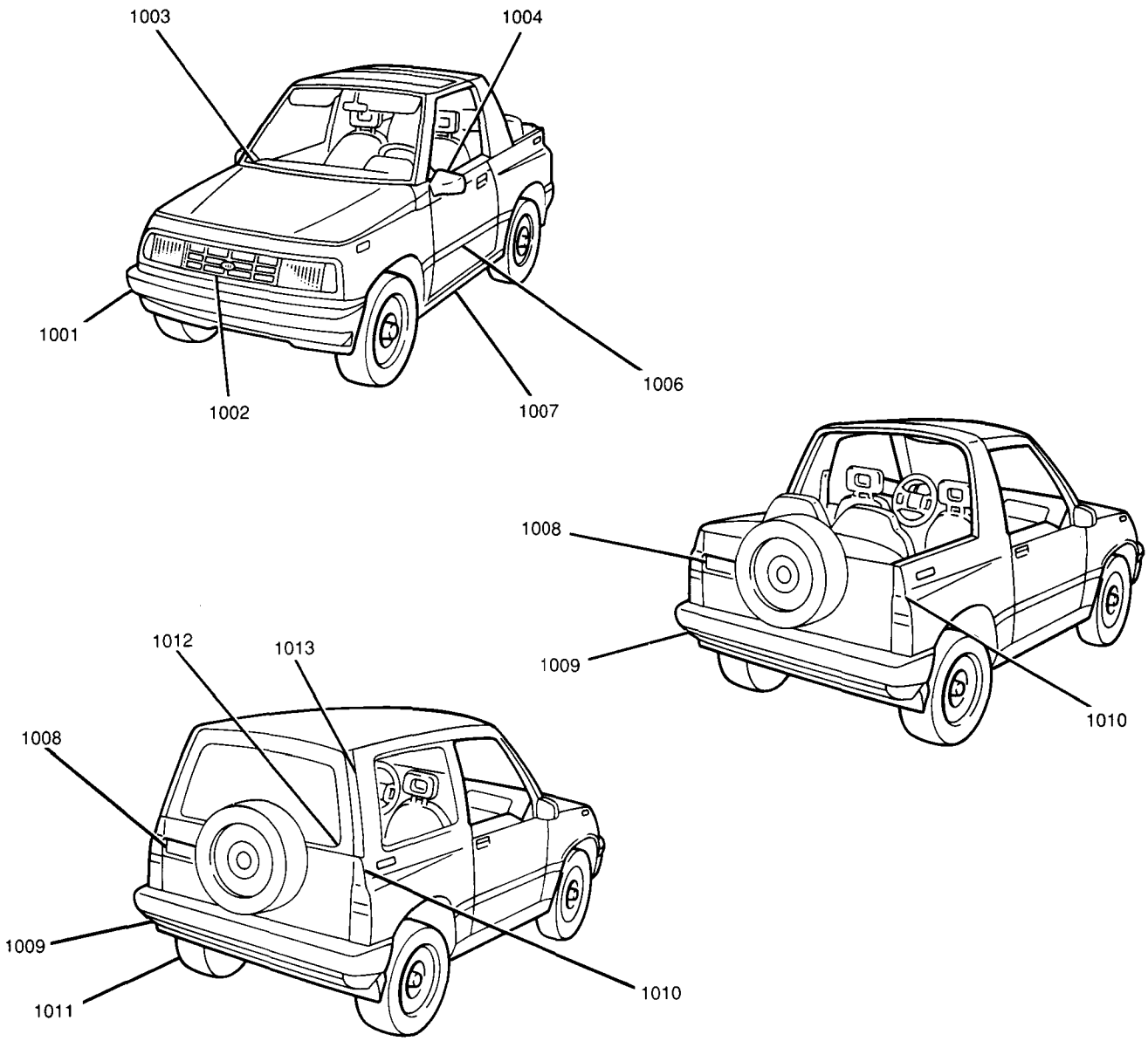

1001 FRONT BUMPER FASCIA — PP
1002 FRONT GRILLE — ABS
1003 COWL VENT GRILLE — ABS
1004 SIDEVIEW MIRROR — ABS
1006 SIDE MOLDING — PVC
1007 SILL SIDE PROTECTOR — PP
1008 REAR DOOR HANDLE COVER — ABS
1009 REAR BUMPER FASCIA — PP
1010 REAR COMBINATION LAMP ASSEMBLY GARNISH — PPO
1011 REAR MUD FLAP — PVC
1012 BACK DOOR GARNISH — ABS
1013 C-PILLAR GARNISH — PP

ABS: ACRYLONITRILE-BUTADIENE-STYRENE
PP: POLYPROPYLENE
PVC: POLYVINYL CHLORIDE
PPE: POLYPHENYLENE ETHER
PA: POLYAMIDE
PPO: POLYPHENYLENE OXIDE

NC7282-10-1-JT-RS

Figure 11 Locations and Types of Exterior Plastic Parts

CHART OF PLASTIC PARTS IDENTIFICATION AND REFINISHING SYSTEMS

IDENTIFYING SYMBOL	CHEMICAL COMPOSITION OR PLASTIC "FAMILY" NAME	TYPICAL AREA(S) WHERE PART USED	EXAMPLES OF COMMON AND/OR TRADE NAMES	TYPICAL PAINT REPAIR SYSTEM
UP	Polyester/Thermoset	Fender extensions Hoods Roofs Deck lids Instrument housings Ventilation grids Air scoops Air spoilers	SMC, Premi-glas, Selectron, Vibrinmat, "Fiberglass"	#1, and #4
PE	Polyethylene	Inner Fender Panels Valances, Spoilers, Interior Trim Panels, Seat Belt Covers, Fuel Tank Shields	Dylan, Fortiflex, Marlex, Alathon, Hi-fax, Hosalen, Paxon	#3
PS	Polystyrene	Instrument Panels Door Panels	Lustrex, Dylan Styron, Durathon, Polystyrol	#3
PPE (PPYO)	Polyphenylene Ether	Chromed Plastic Parts; Headlamp Covers, Ornaments, Bezels	Noryl, Oleflo, Prevex	N/A
PP	Polypropylene	Door Panels, Load Floors, Kick Panels, Deflector Panels, Cowl Panels, Wheel Covers, Interior Moldings, Radiator Shrouds, Inner Fenders, Bumper Covers	Profax, Oleflo, Marlex, Azdel, Novolen, Tenite, Daplen, Escorene	#2, #3 and #5
TPU (TPUR)	Polyurethane, Thermoplastic	Bumper Fascias, Soft Filler Panels, Window Moldings Gravel Deflectors	Pellethane, Estane, Roylar, Toxin	#2, #3 and #5
PUR	Polyurethane, Thermoset (Unsaturated)	Bumper Covers Front and Rear Body Panels, Filler Panels	Castethane, Bayflex, (Commonly referred to as RIM AND RRIM)	#2 and #5
ABS	Acrylonitrite-Butadine-Styrene	Instrument Clusters Trim Moldings Consoles Armrest Supports Steering Column Brackets Steering Column Jackets	ABS, Cycolac, Abson, Kralastic, Lustran, Absafil, Dyel	#1 and #4
ABS + PC	Acrylonitrile/Butadine Styrene + Polycarbonate	Instrument Panels, Instrument Clusters	Baybland, Proloy, Cycoloy, KHA	#1 and #4
ABS/PVC	ABS/Vinyl — (Soft)	Headrest Skins Trim Moldings Trim Panels	ABS Vinyl	#3
E/P (EPM) TPO	Ethylene/Propylene (Rubber)	Bumper Fascias Valance Panels Fascias Air Dams	TPO, TPR (Thermo-plastic Rubber) EPI, EPII	#3 and #5
EPDM	Ethylene Propylene Diene Monomer	Bumper Impact Strips Body Panels	EPDM, Nordel	#2, #3 and #5
E/VAC (EVA)	Ethylene/Vinyl Acetate	Headrest Skins Miscellaneous Soft Trim Components	Elvax, Microthane	#3
PA + PPE	Polyamide + Polyphenylene Ether	Fenders, Exterior Trim	GTX	#2, #3 and #5

IMPORTANT: Follow selected paint manufacturer's product label directions. Observe all warnings on material container labels.

PC1578-10-1-M-RS

Figure 12 Plastics Identification Chart

CHART OF PLASTIC PARTS IDENTIFICATION AND REFINISHING SYSTEMS

IDENTIFYING SYMBOL	CHEMICAL COMPOSITION OR PLASTIC "FAMILY" NAME	TYPICAL AREA(S) WHERE PART USED	EXAMPLES OF COMMON AND/OR TRADE NAMES	TYPICAL PAINT REPAIR SYSTEM
PVC	Polyvinyl Chloride (Vinyl)	Interior Soft Trim, Instrument Panel Skins, Roof Covers	Geon, Vinylite, Pliovic, "Vinyl", Vinoflex, Unichem	#5
S-A (SAN)	Styrene-Acrylonitrile	Center Consoles Glove Box Doors Interior Trim Panels	Lustran, Tyril, Foracryl	#1 and #3
PC + PETP	Polycarbonate + Polybutylene Terephthalate	Bumper Fascias	Xenoy, Valox, Macroblend	#1, #2, #4, and #5
PA	Polyamide	Headlamp bezels Quarter panel exts. Exterior Finish Trim Panels	Nylon, Capron, Zytel Rilsan, Minlon, Vydyne, Wellamid	#1 and #4
PBTP + EEBC	Polybutylene Terephthalate + Ether Ester Block Copolymer	Rocker Cover Mldgs. Fascias	Bexloy "M"	#1 and #4
PC	Polycarbonate	Interior Hard (Rigid) Trim Panels Valance Panels	Lexan, Merlon, Calibre	#1 and #4
PF	Phenol — Formaldehyde	Ash Trays	Phenolic, Bakelite, Durez, Genal, Resinox, Amberol, Plyophen	#1

( ) = Old Identifying Symbols in above charts.

(PVC) = Typical ISO marking symbol found on plastic parts.

SAE [PVC] = Typical new SAE marking symbol found on plastic parts.

SUGGESTED PLASTIC PARTS PAINT REPAIR SYSTEMS

SYSTEM #1 (Exterior)
Conventional Lacquer/Enamel *Acrylic Urethane

SYSTEM #2 (Exterior)
Flexible/Lacquer/Enamel/*Acrylic Urethane

SYSTEM #3 (Exterior)
Polypropylene Primer and *Special Topcoat

SYSTEM #4 (Exterior)
Base Color Coat with Acrylic Lacquer or *Acrylic Urethane Clear Coat

SYSTEM #5 (Exterior)
Base Color Coat with *Flexible Urethane Clear Coat

* Contains Isocyanates — Use recommended respiratory protection

PC1576-10-1-M-RS

Figure 13 Plastics Identification Chart

ABBREVIATION	MATERIAL NAME	HEAT RESISTING TEMPERATURE °C (°F)	RESISTANCE TO GASOLINE AND SOLVENTS	OTHER CAUTIONS
PE	POLYETHYLENE	80 (176)	GASOLINE AND MOST SOLVENTS ARE HARMLESS	FLAMMABLE
PVC	POLYVINYL CHLORIDE	90 (194)	GASOLINE AND MOST SOLVENTS ARE HARMLESS IF APPLIED FOR VERY SHORT TIME (WIPE UP QUICKLY)	POISON GAS IS EMITTED WHEN BURNED
PP	POLYPROPYLENE	90 (194)	GASOLINE AND MOST SOLVENTS ARE HARMLESS	FLAMMABLE
ABS	ACRYLONITRILE BUTADIENE STYRENE RESIN	90 (194)	AVOID GASOLINE AND SOLVENTS	AVOID BRAKE FLUID
AES	ACRYLONITRILE ETHYLENE STYRENE	90 (194)	AVOID GASOLINE AND SOLVENTS	AVOID BRAKE FLUID
PMMA	POLYMETHYL METHACRYLATE	90 (194)	AVOID GASOLINE AND SOLVENTS	AVOID BRAKE FLUID
PUR	POLYURETHANE	90 (194)	GASOLINE AND MOST SOLVENTS ARE HARMLESS	AVOID BRAKE FLUID
AAS	ACRYLONITRILE ACRYLIC RUBBER STYRENE	95 (203)	AVOID GASOLINE AND SOLVENTS	AVOID BRAKE FLUID
PPE	POLYPHENYLENE ETHER	110 (230)	AVOID GASOLINE AND SOLVENTS	
PPO	POLYPHENYLENE OXIDE	110 (230)	AVOID GASOLINE AND SOLVENTS	
POM	POLYACETAL	120 (248)	GASOLINE AND SOLVENTS ARE HARMLESS	AVOID BATTERY ACID
PC	POLYCARBONATE	120 (248)	AVOID GASOLINE AND SOLVENTS	
PA, PAG, PAGG	POLYAMIDE (NYLON)	150 (302)	GASOLINE AND MOST SOLVENTS ARE HARMLESS	AVOID IMMERSING IN WATER
FRP	FIBER REINFORCED PLASTICS	170 (338)	GASOLINE AND MOST SOLVENTS ARE HARMLESS	
PPC	POLYPROPYLENE COMPOSITE	115 (239)	GASOLINE AND MOST SOLVENTS ARE HARMLESS	FLAMMABLE
PBT	POLYBUTYLENE TEREPHTHALATE	140 (284)	GASOLINE AND MOST SOLVENTS ARE HARMLESS	
TPR	THERMOPLASTIC RUBBER	80 (176)	AVOID GASOLINE AND SOLVENTS	
TPE	THERMOPLASTIC ELASTOMER	80 (176)	AVOID GASOLINE AND SOLVENTS	

1. When repairing and painting a portion of the body adjacent to plastic parts, consider their characteristics (influence of heat and solvent) and remove them if necessary or take suitable measures to protect them.
2. Plastic parts should be repaired and painted using methods suiting the materials.

PC1579-10-1-M-RS

Figure 14 Handling Precautions for Plastics

PLASTIC PARTS REPAIR

Soft plastic parts used for exterior or cosmetic application are compounded of resins that have flexible characteristics in order to absorb minor impact without sustaining damage. Typical examples include bumpers, front end fascia or side panels such as fenders. These parts are generally fabricated of thermosetting plastics which, when cured, cannot be melted with application of heat such as through hot air welding. However, if the impact force is great enough to create damage, thermoplastic can be successfully repaired with structural adhesives.

Briefly, the repair system amounts to filling, and where necessary, a reinforcing operation. After curing, the patch is dressed to conform to the surrounding contour.

GOUGE OR PUNCTURE REPAIR

Figures 15 through 21

1. Clean the repair area with a silicone, wax, or grease removing solvent such as Prep-Sol, Pre-Kleano, Acryli-Clean, or equivalent. Use a clean 51 to 76 mm (2 to 3-inches) #80 grit disc to enlarge the gouge or puncture in order to ensure removal of grease, oil, or dirt from the area to be contacted by the repair material (Figure 15). This action should also create at least a 38 mm (1.5-inches) taper around the repair material and substrate. Remove all dust and loose particles from the repair area.

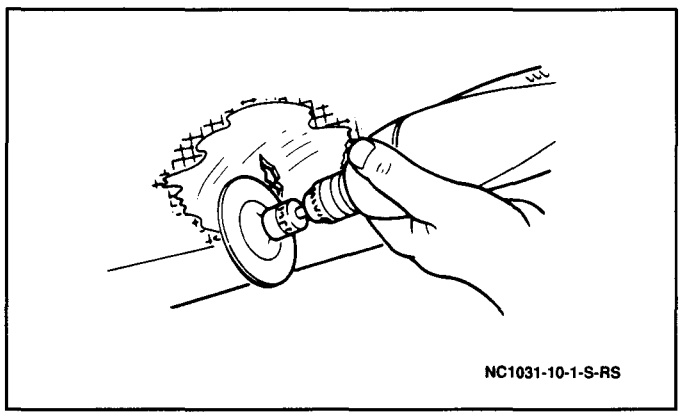

Figure 15 Tapering Substrate Surrounding Damage

Important

- 3M Polyolefin Adhesion Promoter P/N 05907, or equivalent, must be applied to E/P, TPO, PP or EPDM plastic parts after any sanding operation.

2. With a random orbit sander fitted with a #180 grit disc, taper the paint film surrounding the repair area to be filled (Figure 16). The repair material should not overlap the painted surface. Wipe with a clean dry rag and blow off with an air hose.

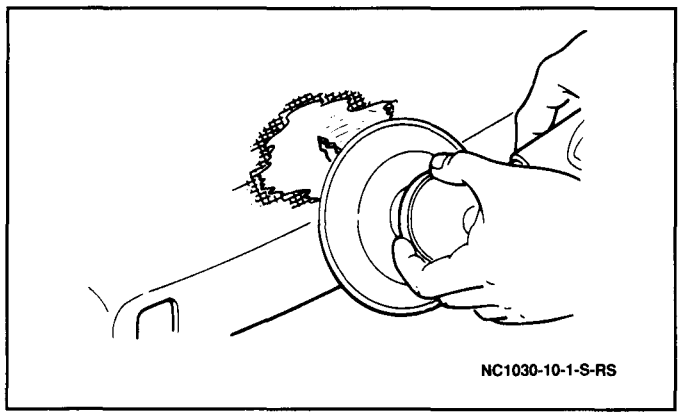

Figure 16 Removing Paint Surrounding Damage

3. Apply 3M Aluminum Autobody Repair Tape P/N 06935, P/N 06936, or equivalent, to the back side of the puncture to support the repair material (Figure 17).

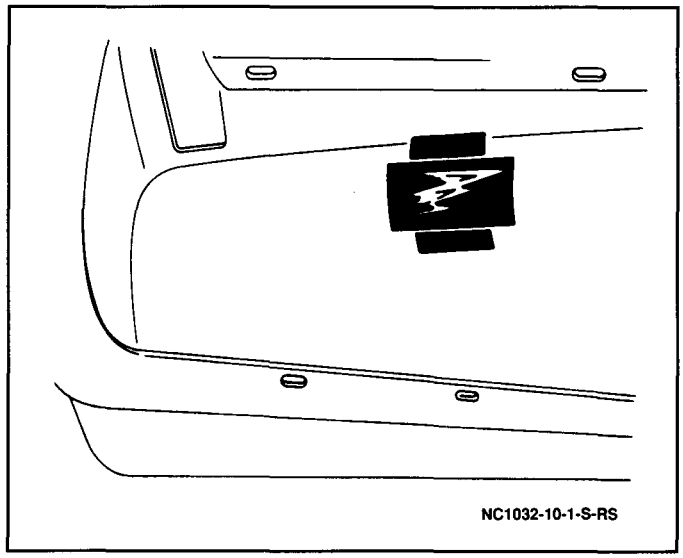

Figure 17 Tape Support for Repair Material

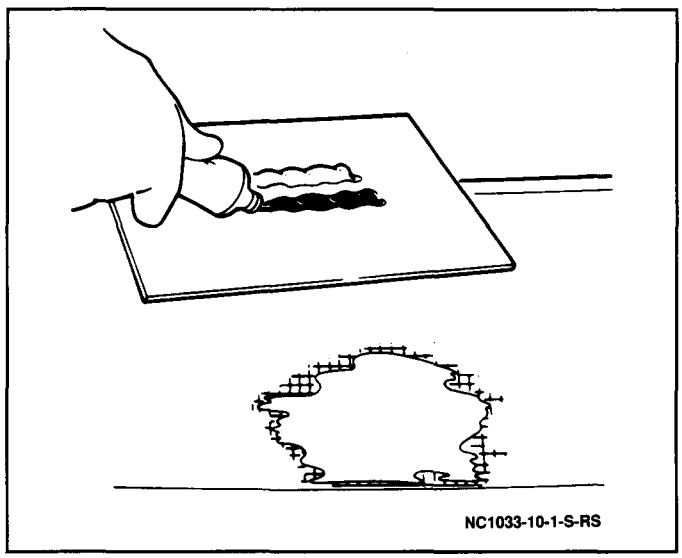

Figure 18 Measuring Two-Component Repair Material

4. On a clean, flat surface of nonporous material such as metal, glass or plastic, deposit two equal length beads (1 bead for each component) of 3M Flexible Parts Repair Material P/N 05900, or equivalent (Figure 18). With a paddling motion, mix the two components until a uniform color and consistency is achieved.
5. Apply the mixed repair material with a squeegee or plastic spreader (Figure 19). Apply a light coat over the entire area; then continue application to a level slightly above the surrounding contour. Make sure that all trapped air is forced out. Allow the mixture to cure 20 to 30 minutes at 16 to 27°C (60 to 80°F).

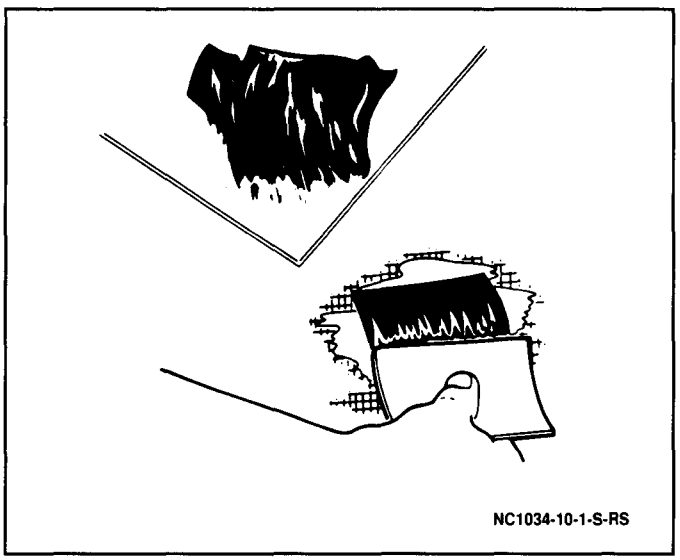

Figure 19 Mixed Repair Material Application

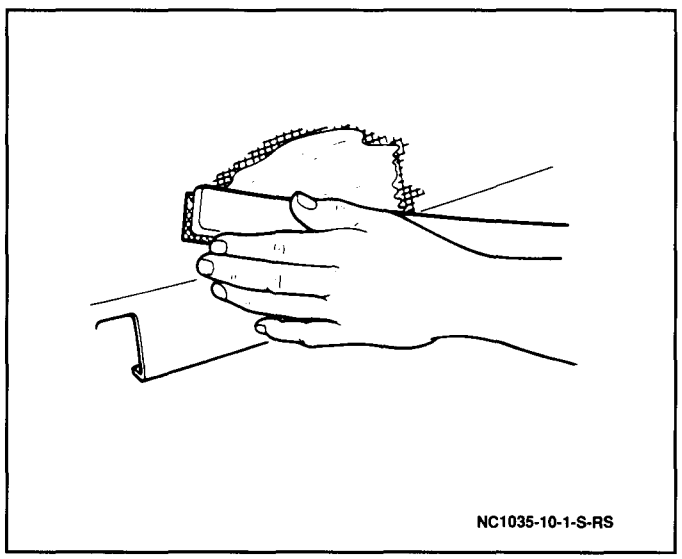

Figure 20 Establishing Rough Contour with Body File

6. Establish rough contour where possible with a curved tooth body file (Figure 20). Follow by block sanding using #220 grit sandpaper to establish accurate level and contour with the surrounding surface (Figure 21). If low areas or pits remain, apply 3M Flexible Parts Putty P/N 05903, or equivalent. Allow flexible parts putty to dry at least 15 minutes. For final feathering, use a random orbit sander with a #320 grit disc.

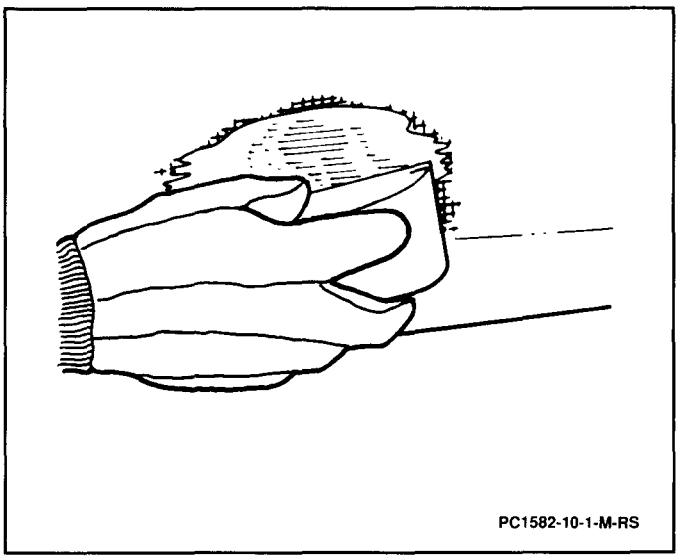

Figure 21 Block Sanding for Accurate Contour

7. After final feathering, apply a coat of 3M Flexible Parts Coating P/N 05907, or equivalent. Allow to flash dry for ten minutes, and then apply a second coat of flexible parts coating. Let coating dry 45 minutes and lightly scuff sand with #320 grit sandpaper.

STRUCTURAL REPAIR

Figures 18 and 22 through 27

When a piece of attaching surface of a part is cracked or broken away, structural strength may be restored as follows:

1. Align and secure the piece on the face side with 3M Aluminum Autobody Repair Tape P/N 06935, P/N 06936, or equivalent, and clamp (Figure 22).

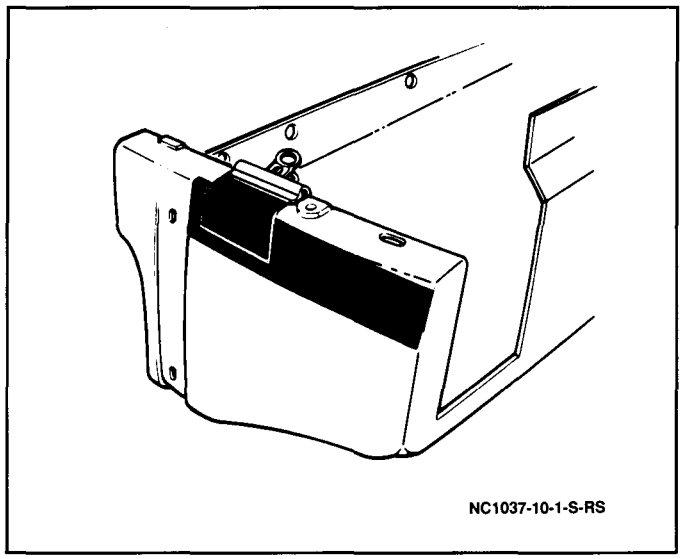

Figure 22 Aligning Damage with Tape Clamp

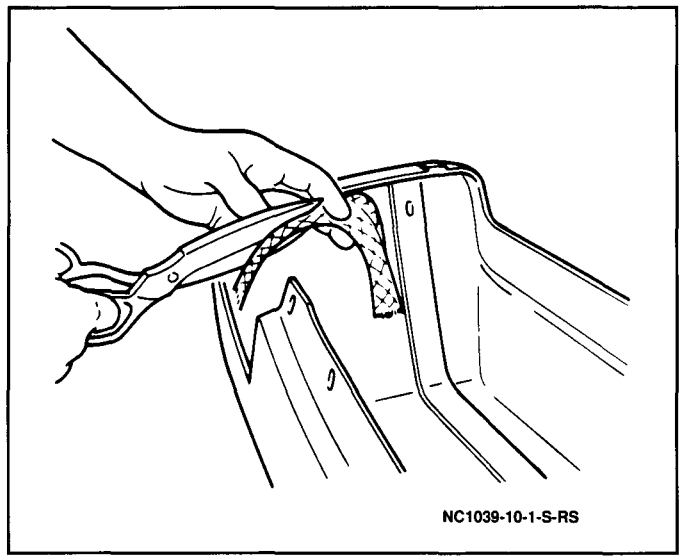

Figure 24 Cutting Fiberglass Cloth to Size

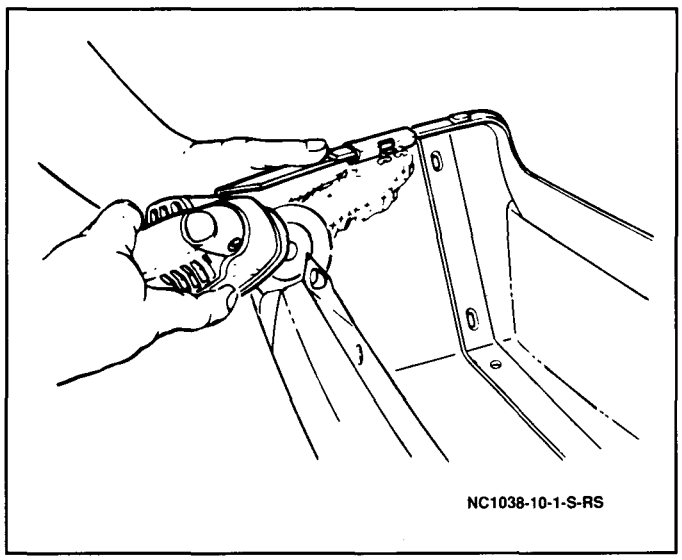

Figure 23 Sanding Back Side of Damage

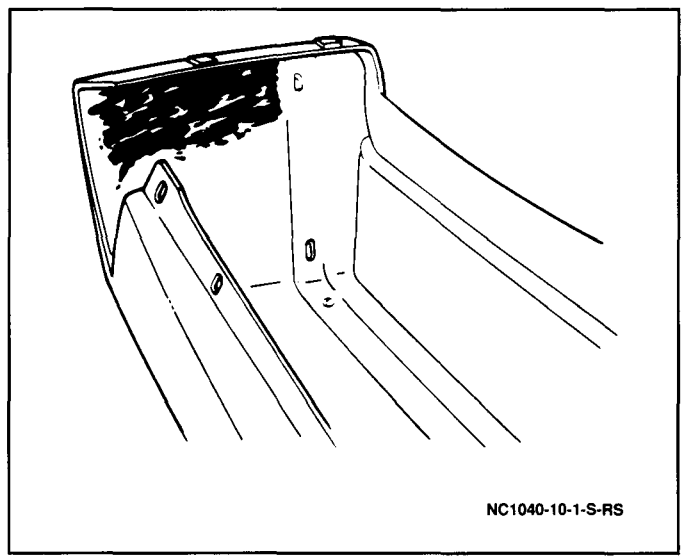

Figure 25 Repair Material Application — Back Side of Damage

2. Clean the underside of the repair area with a silicone, wax or grease removing solvent such as Prep-Sol, Acryli-Clean, Pre-Kleano, or equivalent. Apply with a water-dampened cloth and wipe dry. With a random orbit sander fitted with a #180 grit disc, remove the paint film in and surrounding the area to be filled (Figure 23). The repair material should not overlap the painted surface. Sand each side of the break with a #80 grit disc.
3. Cut a piece of fiberglass cloth large enough to overlap the break 38 to 51 mm (1.5 to 2.0-inches) (Figure 24).
4. On a clean flat surface of nonporous material such as metal, glass or plastic, deposit equal length beads of 3M Flexible Parts Repair Material P/N 05900, or equivalent (Figure 18). With a paddling motion, mix the two components until a uniform color and consistency is achieved. Apply a layer of the mixture approximately 3 mm (0.12-inch) thick on the back side of the part overlapping the break 38 to 51 mm (1.5 to 2.0-inches) (Figure 25).
5. Apply the precut fiberglass cloth to the adhesive and immediately cover the cloth with additional adhesive in sufficient quantity to fill the weave (Figures 26 and 27). Make sure the fiberglass cloth is completely saturated and there are no exposed fibers or trapped air pockets.

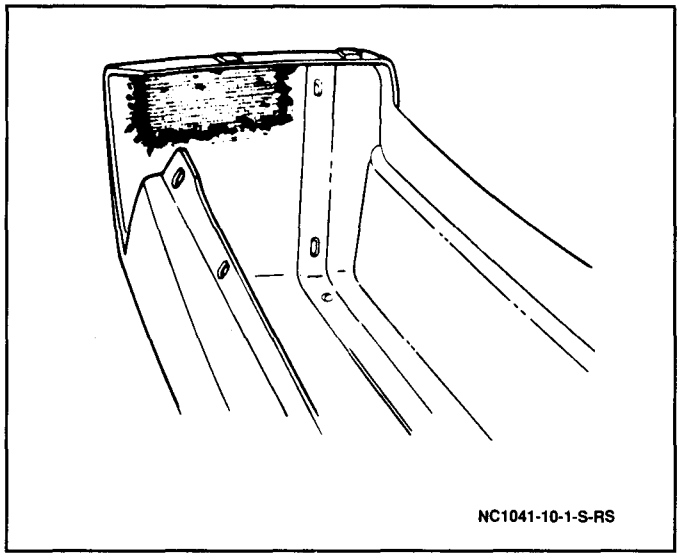

Figure 26 Fiberglass Cloth Application to Repair

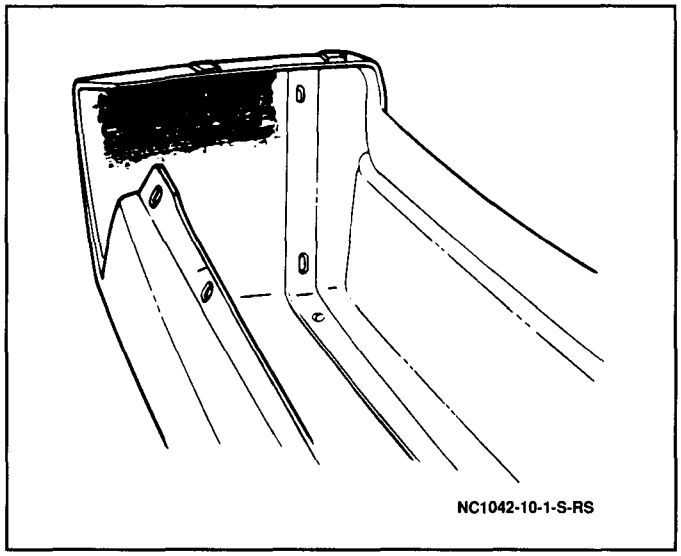

Figure 27 Filling Fiberglass Cloth

6. Allow 20 to 30 minutes cure time at 16 to 27°C (60 to 80°F). Trim excess repair material at edge if necessary.
7. Remove clamp and aluminum autobody repair tape from the face side of repair area.
8. Repair the face side of the area. Refer to "Gouge and Puncture Repair" earlier in this section.

PLASTIC PARTS REFINISHING

CAUTION: Many paint repair systems require additives containing isocyanates. It is essential that all recommendations and warnings listed on the container label for materials selected be followed. It is mandatory that adequate respiratory protection such as air line respirators with a full hood be worn. Such protection should be worn during the entire painting process. Persons with respiratory problems or those allergic to isocyanates must not be exposed to isocyanate vapor or spray mist.

PAINT REPAIR SYSTEMS

Figures 10 through 14

There are many finishing systems available for painting and/or repairing plastic parts. The following recommended procedures apply to the plastics used on this vehicle. Refer to Figures 10 through 14 to identify the plastic. Specific refinishing procedures are described below.

GENERAL PLASTIC PART PROCEDURE

Important

- Do not spot repair. Repair only full panels, since thorough sanding and cleaning are necessary for paint adhesion. Repair material can be either enamel or lacquer-based, depending on your preference.

Surface Preparation

Important

- Replacement parts are factory-primed with enamel-based primer.

If Primer is NOT Scratched:

1. Clean repair area with solvent such as Acryli-Clean, Pre-Kleano, Prep-Sol, or equivalent. Wipe dry.
2. Sand with #600 sandpaper (or a gray "Scotch-Brite®" pad, or equivalent).
3. Reclean and proceed to "Basecoat Application" later in this section.

If Primer is Scratched or Part is Repaired With Filler:

1. Clean repair area with solvent such as Acryli-Clean, Pre-Kleano, Prep-Sol, or equivalent. Wipe dry.
2. Featheredge the repair area with #400 sandpaper. Blow off dust and tack wipe.
3. Mix flexible primer-surfacer to manufacturer's instructions.
4. Apply four medium-dry coats of surfacer. Dry one hour or more.
5. Block sand with #600 sandpaper (or a gray "Scotch Brite®" pad, or equivalent) to remove all gloss.

Important

- Clean spray equipment with lacquer thinner immediately after use.

Basecoat Application

1. Thoroughly block sand entire part with #600 sandpaper (or gray "Scotch Brite®" pad, or equivalent) to remove all gloss. Clean surface.
2. Mix the base color and thinner to manufacturer's instructions. Use flexible additive if recommended.
3. Apply as many coats as needed for hiding and color match. Allow flash time between coats.
4. Dry 30 to 60 minutes before applying clearcoat.
5. Avoid sanding. If unavoidable, use ultra-fine or finer sandpaper. Clean surface and apply one more basecoat.

Clearcoat Application

1. Mix clearcoat material and reducer per manufacturer's label instructions. Use flexible additive if recommended.
2. Apply two to three coats with 240 to 275 kPa (35 to 40 psi) gun pressure. Allow complete flash between coats.
3. Air dry four hours or force-dry 45 minutes with a 62°C (145°F) lamp.
4. Compounding may not be necessary if flexible additive is used in the clearcoat material.

PROCEDURE 1

Primer and color coats must contain elastomeric or flexible properties before they are applied to the following types of plastic parts: polyvinyl chloride (PVC), polyurethane, thermoset (PUR), polyurethane thermoplastics (TPU, TPUR), thermoplastic elastomer (TPE), ethylene propylene diene monomer (EPDM), reaction injection molded urethane (RIM), reinforced reaction injection molded urethane (RRIM) and sheet molded compound (SMC).

Previously painted parts that show signs of cracking, peeling, or improper adhesion must be stripped before repainting. The old finish may be removed by soaking the part in any commercially available chlorinated solvent stripper or lacquer thinner.

Important

- To avoid swelling, do not soak parts longer than necessary to remove the old paint.

1. Clean the entire part with a silicone, wax and grease removing solvent such as Prep-Sol, Acryli-Clean, Pre-Kleano, or equivalent. Apply with a damp cloth and wipe dry.
2. Featheredge the repair with #320 grit sandpaper, blow off dust and tack dry.
3. Mix and apply four medium coats of flexible primer/surfacer. Allow each coat to flash dry between coats.
4. Thoroughly sand the entire part with #400 grit sandpaper to achieve an even dull finish. Clean as in Step 1.
5. Mix and apply a sufficient number of coats of flexible color paint to achieve complete hiding and the best color match. The topcoat mixture will dry to the touch in approximately one hour.
6. Color coat the entire component; spot repair is not recommended.

PROCEDURE 2

This procedure for painting polypropylene parts (E/P or TPO) involves the use of a special primer. Since polypropylene plastic is rigid, it can be color coated after being primed with conventional paints.

Important

- Parts must be primed with a coating of special polypropylene primer according to factory recommendations. Failure to do so will result in color coat adhesion problems such as lifting or peeling. Use polypropylene primer, GM P/N 1052364, or equivalent. Color coats MUST have elastomeric or flexible properties.

1. Clean surface thoroughly with enamel reducer. (DO NOT use grease, wax and silicone removers.)
2. For optimum adhesion to these parts, apply a coat of plastic parts paint adhesion promoter, following manufacturer's label instructions.
3. Apply a thin, wet coat of polypropylene primer according to manufacturer's label directions. Wetness of the primer is determined by observing the gloss reflection of spray application in adequate lighting. Be sure that the primer application includes all edges. Allow primer to flash dry a minimum of one minute to a maximum of ten minutes.
4. During the flash time period, apply color coat as required. Application of color during the flash time range promotes best adhesion.
5. Color coat the entire component; spot repair is not recommended.

PROCEDURE 3

Rigid/polyamide (PA), polyester/thermoset (UP), polybutylene terephthalate (PBTP), GTX 910, and xenoy use the same refinish procedures as on sheet metal parts for any required paint repairs.

PROCEDURE 4

Rigid or hard acrylonitrile-butadiene-styrene (ABS) requires no primer as conventional color coats adhere satisfactorily to this type of plastic.

1. Wash part thoroughly with a grease, wax and silicone removing solvent.
2. Apply color coat according to trim combination (see paint supplier color chart for trim and color code) and manufacturer's label instructions.

Important

- When refinishing interior parts, apply only enough color for proper hiding to avoid washout of the "grain" effect.

PROCEDURE 5

The paint procedure for vinyl and flexible acrylonitrile-butadiene-styrene (ABS) plastic involves the use of an interior vinyl color and a clear vinyl top coat. No primer/sealer is required.

1. Wash part with a vinyl cleaning and preparation solvent. Wipe off cleaner while still wet with a clean, lint-free cloth.
2. As soon as the surface has been wiped dry, apply interior vinyl color in wet coats. Follow manufacturer's label instructions. Use proper vinyl color as shown by the interior trim code combination.

Important

- Apply only enough color for proper hiding to avoid washout of the "grain" effect.

3. Before color flashes completely, apply one wet double coat of vinyl clear top coat. Use top coat with appropriate level of gloss to match adjacent similar components. The clearcoat is necessary to control the gloss requirement and to prevent chalking (rub-off) of the color after drying.

AVAILABILITY OF COLORS FOR PAINTING INTERIOR PLASTIC PARTS

Interior colors are color keyed to trim code combination numbers located on the service parts identification label. Refer to SECTION 0A for other information regarding the service parts identification label.

Conventional interior acrylic lacquer colors are designed for use only on hard trim parts, such as:

1. Steel parts (primer and/or sealer required on new service parts).
2. Hard ABS plastic (no primer necessary).
3. Hard polypropylene plastic (special primer required).

Each major paint supplier provides an interior color chart which identifies the stock number, color name, gloss factor and trim code combination number for each conventional interior color.

BODY PANEL ADJUSTMENT AND ALIGNMENT

Use the specifications given in Figure 28 after body repair procedures are completed to ensure proper clearance and flushness of all body panels.

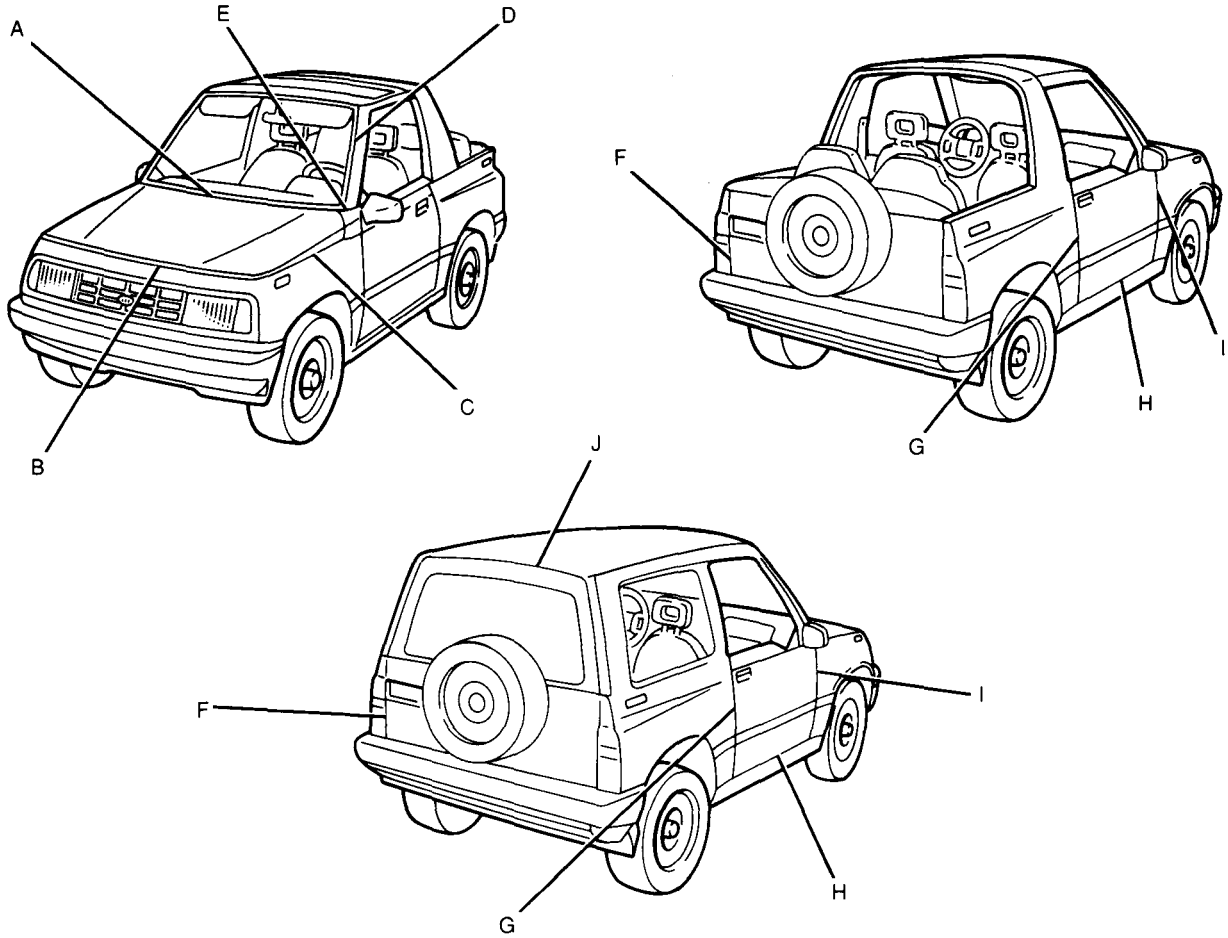

	LOCATION	CLEARANCE GAP (MILLIMETERS)	FLUSHNESS (MILLIMETERS)
A	HOOD-TO-COWL VENT GRILLE	3.7 mm (0.14")	—
B	HOOD-TO-FRONT END PANEL	4.2 – 7.0 mm (0.16 - 0.27")	0.0 – 1.5 mm (0.0 – 0.5")
C	HOOD-TO-FENDER	4.5 – 7.1 mm (0.17 – 2.8 mm)	—
D	SIDE WINDOW PILLAR-TO-WINDSHIELD PILLAR	5.2 mm (0.20")	0.0 – 1.5 mm (0.0 – 0.5")
E	COWL VENT GRILLE-TO-FENDER	4.8 mm (0.18")	—
F	REAR DOOR-TO-QUARTER PANEL	5.5 – 8.2 mm (0.21 – 0.32")	0.0 – 1.5 mm (0.0 – 0.5")
G	DOOR-TO-QUARTER PANEL	4.0 – 6.8 mm (0.15 – 0.26")	0.0 – 1.5 mm (0.0 – 0.05")
H	DOOR-TO-ROCKER PANEL	4.0 – 7.0 mm (0.15 – 0.27")	0.0 – 1.5 mm (0.0 – 0.05")
I	DOOR-TO-FENDER	4.4 – 7.0 mm (0.17 – 0.27")	0.0 – 1.5 mm (0.0 – 0.05")
J	REAR DOOR-TO-ROOF (HARDTOP MODEL)	8.8 – 11.8 mm (0.34 – 0.46")	0.9 – 1.5 mm (0.0 – 0.05")

NC8153-10-1-JT-RS

Figure 28 Sheet Metal Tolerances

SPECIFICATIONS

SERVICE PARTS INFORMATION

Component Name Used in Section 10-1	Reference Name in Service Parts Catalog	Group Number
Front Fender Molding	Molding, Side Front	17.507
Front Door Molding	Molding, Side Center	17.507
Rear Quarter Molding	Molding, Side Rear	17.507
Tracker Decal (Front Door)	Emblem, Tracker	17.507
Geo Decal (Rear Bumper Fascia)	Emblem, Rear Bumper Fascia (Geo)	7.832

SECTION 10-2

STATIONARY WINDOWS

CAUTION: When replacing a windshield or a rear door window, urethane adhesive GM P/N 12345633, or equivalent, must be used to maintain original installation integrity. Failure to use urethane adhesive will result in poor retention of the window which may allow unrestrained occupants to be ejected from the vehicle, resulting in personal injury.

NOTICE: When fasteners are removed, always reinstall them at the same location from which they were removed. If a fastener needs to be replaced, use the correct part number fastener for that application. If the correct part number fastener is not available, a fastener of equal size and strength (or stronger) may be used. Fasteners that are not reused, and those requiring thread-locking compound, will be called out. The correct torque values must be used when installing fasteners that require them. If the above procedures are not followed, parts or system damage could result.

CONTENTS

General Description 10-2-1
Stationary Windows 10-2-1
Adhesive Service Kit 10-2-1
Reveal Moldings 10-2-2
On-Vehicle Service 10-2-2
Reveal Moldings 10-2-2
Windshield Reveal Molding 10-2-2
Rear Door Window Reveal Molding 10-2-3
Stationary Windows 10-2-4
Windshield 10-2-4
Rear Door Window 10-2-10
Rear Window Defogger 10-2-11
Testing Grid Lines 10-2-11
Grid Line Repair 10-2-11
Bus Bar Lead Terminal Repair 10-2-12
Specifications 10-2-13
Fastener Torques 10-2-13
Service Parts Information 10-2-13
Special Tools 10-2-13

GENERAL DESCRIPTION

The information contained in this section provides service procedures that apply to the stationary windows and the reveal moldings. Stationary windows are immovable within their frames. These include the windshield and the rear door window. Also covered in this section is the rear window defogger system. For service procedures involving windows that are movable within their frames, namely all door windows and the outside rearview mirrors, refer to SECTION 10-6. Service procedures for the inside rearview mirror are located in SECTION 10-9. Service procedures for the movable quarter windows are located in SECTION 10-7.

STATIONARY WINDOWS

The windshield and the rear door window are all installed from outside the body, by using a special type of urethane adhesive in conjunction with a primer. To replace any of these windows requires either partial or complete replacement of the adhesive. Partial replacement is known as the short method. Complete replacement of the adhesive is known as the extended method.

The short method can be used if, after window removal, the original adhesive left on the window opening pinch weld flanges can serve as a base for the new window. This method applies in cases of cracked windshields or removal of windows that are still intact. The amount of adhesive left in the window opening can be controlled during window removal.

The extended method is used when, after window removal, the original adhesive left in the window opening pinch weld flanges cannot serve as a base for the new window. This method is used in cases needing metal work or painting repair in the window opening. In such cases, the original adhesive is completely removed and is replaced with new adhesive during window replacement.

The window removal procedure is the same in both the short and extended methods, with one exception: if the short method is to be used, extra care is required during window cut-out to make certain that an even bead of adhesive remains on window opening to serve as a base for new window.

ADHESIVE SERVICE KIT

Adhesive caulking kit (urethane) GM P/N 12345633 contains some of the items, including piano wire and primer, needed to replace a urethane adhesive-installed window using the short method, or any adhesive-installed window using the extended method. An equivalent adhesive kit may be used. Use an adhesive that has a minimum shearing strength of 40 kg/cm (569 lb.in.).

Additional items required:

- Solvent for cleaning edge of window (preferably alcohol).
- Household cartridge-type caulking gun.
- Commercial-type razor knife (for cutting around edge of window).
- Two new brushes for primer application.
- Spacers.
- Rubber suction grips.

Important

- Each adhesive has its own drying and setting time and must be handled and used according to specific procedures. Failure to follow these procedures could result in a poor window-to-body bond. Be sure to read the adhesive instructions very carefully and observe each step of the procedure very closely.

REVEAL MOLDINGS

The reveal moldings for the windshield and the rear door are a vinyl trim which fits between the edge of the window and the body. The reveal moldings are hand-pressed into place and retained with urethane adhesive GM P/N 12345633, or equivalent. The windows do not need to be removed to replace the reveal moldings. Trimming the reveal molding may be necessary for certain reveal molding applications. Trimming may also be necessary to allow room for both the molding and urethane adhesive to fit in the cavity between the window and the body.

ON-VEHICLE SERVICE

REVEAL MOLDINGS

Windshield Reveal Molding

Figure 1

Remove or Disconnect

- Pull windshield reveal molding away from windshield and remove from vehicle.

Install or Connect

Important

- Trim reveal molding, as necessary, to fit in the cavity between the windshield and windshield pillar.

- Apply a clear primer from urethane adhesive kit GM P/N 12345633, or equivalent, to the back side of the reveal molding.
- Apply a bead of urethane adhesive from kit GM P/N 12345633, or equivalent, into cavity between the windshield and windshield pillar.
- Windshield reveal molding to vehicle; press into place starting from the center of the molding.

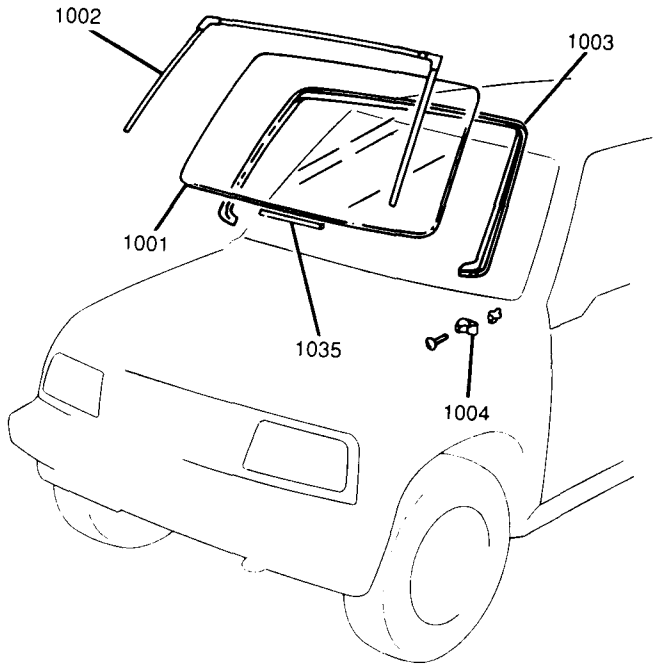

1001 WINDSHIELD
1002 WINDSHIELD REVEAL MOLDING
1003 WINDSHIELD OPENING INNER TRIM
1004 WINDSHIELD STOPPER
1035 WINDSHIELD SPACER

NC3311-10-2-JT-RS

Figure 1 Windshield and Reveal Molding

Rear Door Window Reveal Molding

Rear Door Window Upper Reveal Molding

Figure 2

Remove or Disconnect

- Pull the upper reveal molding joints from the left and right sides of the rear door.
- Pull the upper reveal molding from the rear door.

Install or Connect

- Apply a clear primer from urethane adhesive kit GM P/N 12345633, or equivalent, to the back side of the reveal molding.
- Apply a bead of urethane adhesive from kit GM P/N 12345633, or equivalent, into cavity between body and window.
- Upper reveal molding to rear door; press into place starting from the center of the molding.
- Press upper reveal molding joints into place.
- Tape may be applied to retain reveal molding until urethane cures.
- Allow adhesive to cure according to manufacturer's instructions.

Rear Door Window Lower Reveal Molding

Figure 2

Remove or Disconnect

- Unsnap rear garnish from the lower, right side of the rear door.

1. Lower reveal molding joint from the left side of the rear door.

- Cut lower reveal molding and remove from rear door.

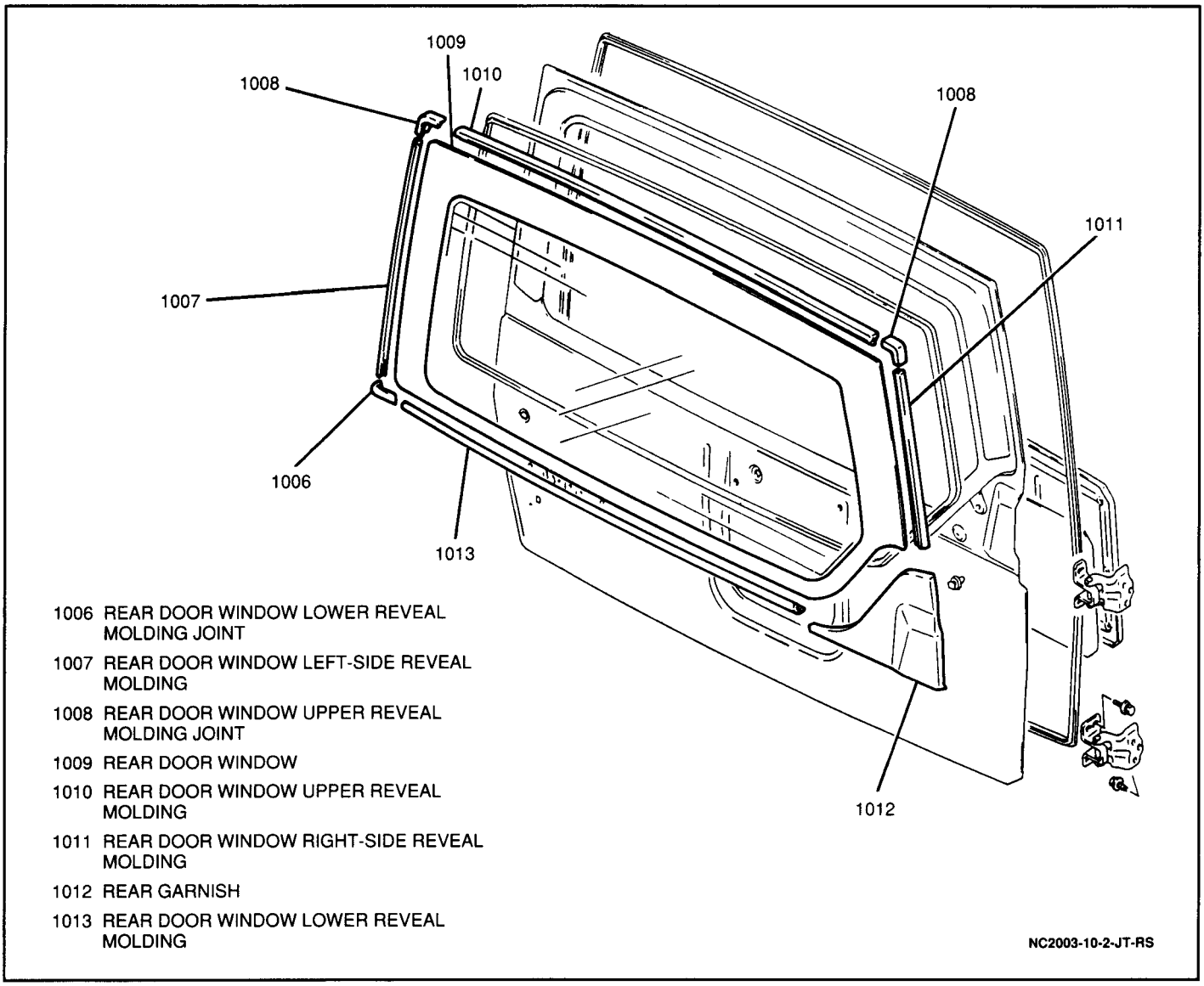

Figure 2 Rear Door Window and Reveal Moldings

Install or Connect

- Apply a clear primer from urethane adhesive kit GM P/N 12345633, or equivalent, to the back side of the lower reveal molding.
- Apply a bead of urethane adhesive from kit GM P/N 12345633, or equivalent, into cavity between body and window.
- Trim new lower reveal molding to fit into cavity between body and window.

1. Lower reveal molding to rear door; press into place starting from the center of the molding.
2. Lower reveal molding joint to the left side of the rear door; press into place.

- Tape may be applied to retain reveal molding until urethane cures.
- Allow adhesive to cure according to manufacturer's instructions.

Rear Door Window Right-Side Reveal Molding

Figure 2

Remove or Disconnect

- Unsnap rear garnish from the lower, right side of the rear door.
- Pull upper right-side reveal molding joint from rear door.
- Pull right-side reveal molding from rear door.

Install or Connect

- Apply a clear primer from urethane adhesive kit GM P/N 12345633, or equivalent, to the back side of the reveal molding.
- Apply a bead of urethane adhesive from kit GM P/N 12345633, or equivalent, into cavity between body and window.

1. Right-side reveal molding to rear door; press into place starting from the center of the molding.

- Press upper right-side reveal molding joint to rear door.
- Tape may be applied to retain reveal molding until urethane cures.
- Allow adhesive to cure according to manufacturer's instructions.

2. Rear garnish to lower, right side of rear door; snap into place.

Rear Door Window Left-Side Reveal Molding

Figure 2

Remove or Disconnect

1. Left-side upper and lower reveal molding joints from rear door.

- Pull left-side reveal molding from rear door.

Install or Connect

- Apply a clear primer from urethane adhesive kit GM P/N 12345633, or equivalent, to the back side of the reveal molding.
- Apply a bead of urethane adhesive from kit GM P/N 12345633, or equivalent, into cavity between body and window.

1. Left-side reveal molding to rear door; press into place starting from the center of the molding.
2. Upper and lower left-side reveal molding joints to rear door; press into place.

- Tape may be applied to retain reveal molding until urethane cures.
- Allow adhesive to cure according to manufacturer's instructions.

STATIONARY WINDOWS

Windshield

Short Method

Figures 1 and 3 through 13

Remove or Disconnect

1. One nut from each wiper arm and wiper arms from vehicle.

- Unclip washer hoses from cowl vent grilles.

2. Nine plastic retaining clips and cowl vent grilles from vehicle.

- Use tape to cover body surface around window to prevent damage.
- Pull inside rearview mirror trim bezel from mirror.

3. Two screws and inside rearview mirror from vehicle.

- Pull reveal molding from windshield and remove from vehicle.

- Punch hole through adhesive with eyeleteer (Figure 3) and slip piano wire through hole.

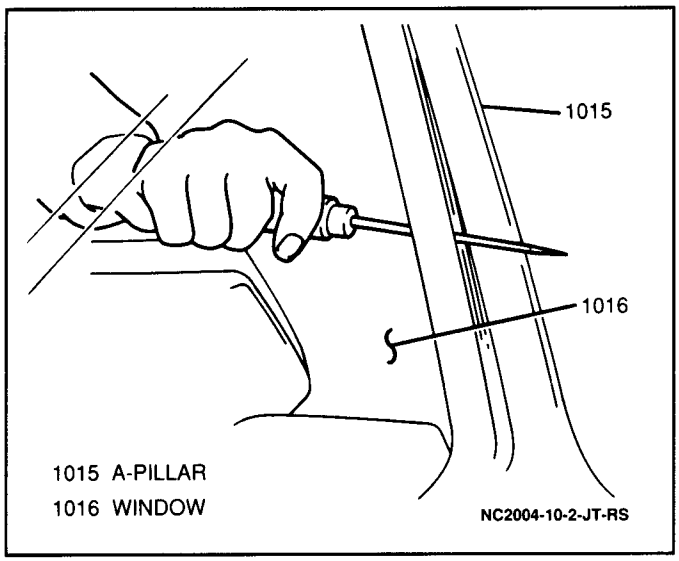

Figure 3 Opening Adhesive for Piano Wire

- Twist ends of wire around wood dowels.
- Cut adhesive all around windshield with piano wire (two technicians required, Figures 4 and 5).

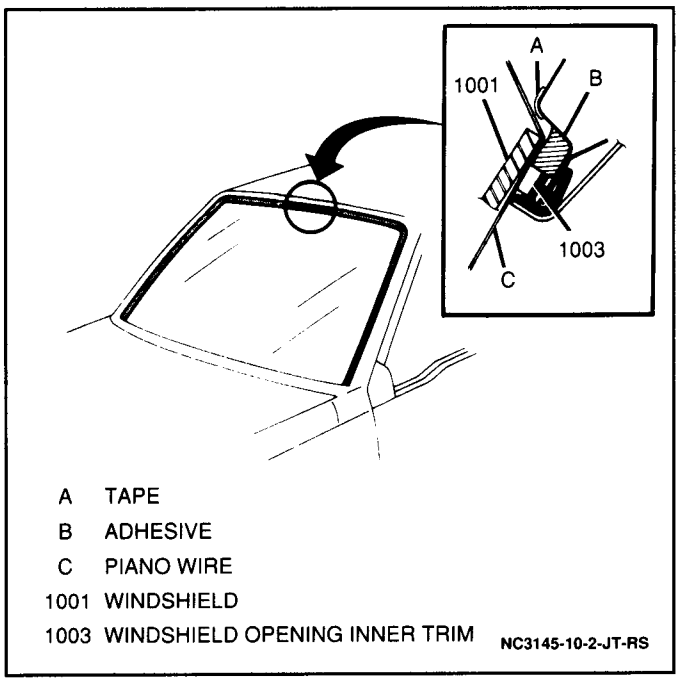

Figure 4 Piano Wire Placement

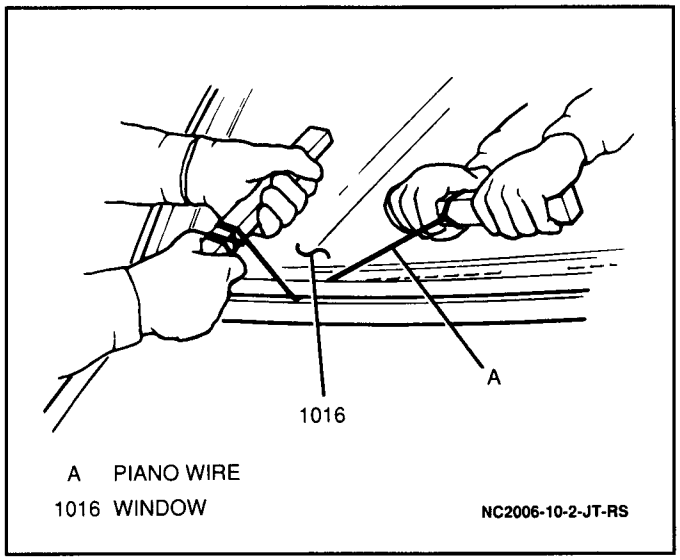

Figure 5 Cutting Adhesive With Piano Wire

NOTICE: Keep piano wire as close to windshield as possible to avoid damage to body.

4. Windshield from vehicle.
5. One screw from each windshield stopper and stoppers from vehicle (Figure 6).

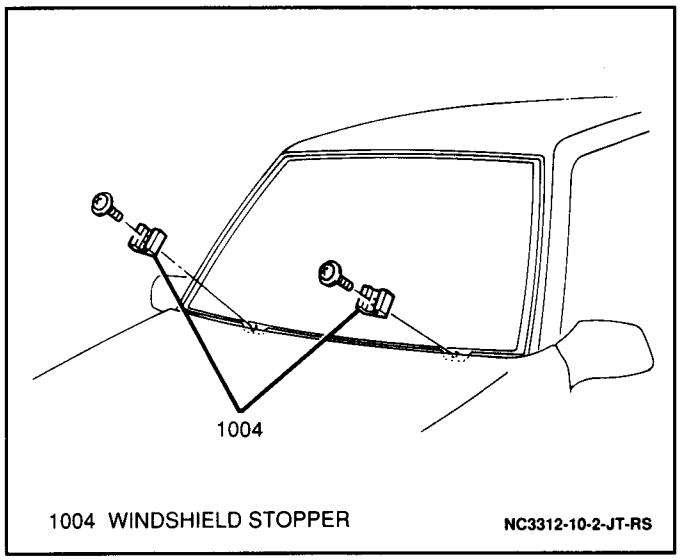

Figure 6 Windshield Stoppers

6. Rubber dam from windshield opening.
- Using a knife cleaned with alcohol or petroleum distillate (to remove any dirt or oil), trim remaining adhesive to a uniform thickness (Figure 7).

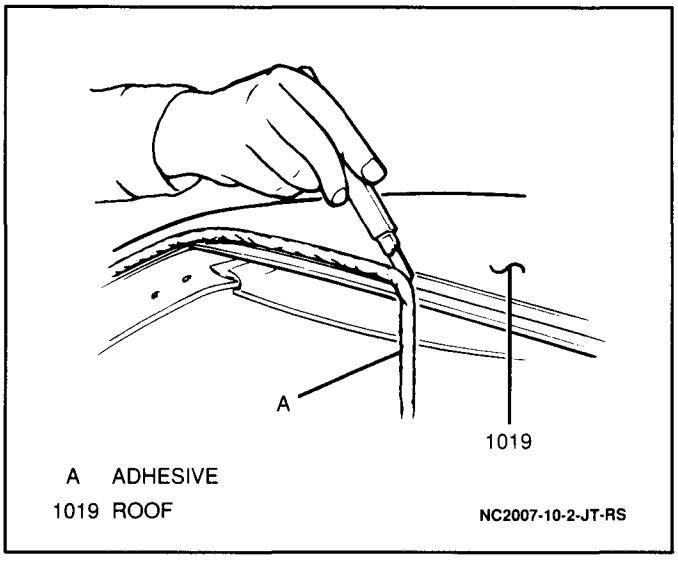

Figure 7 Trimming Old Adhesive

Clean

- Any loose material from windshield opening. If windshield will be reused, all urethane must be removed from it.

Install or Connect

1. Inside rearview mirror to vehicle; secure with two screws.
2. Inside rearview mirror trim bezel to mirror; snap into place.

Clean

- Surface of window to which adhesive will be applied (around edge of inside surface) with a clean, alcohol-dampened cloth. Allow to air dry for at least ten minutes.

3. Two windshield stoppers to vehicle; secure each with one screw (Figure 6).
4. Peel paper from one side of new windshield spacer and attach to windshield (Figure 8).

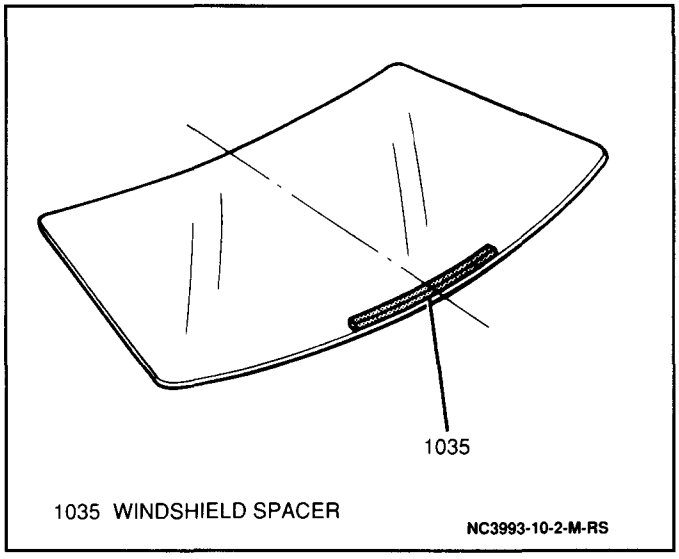

Figure 8 Windshield Spacer

5. Windshield to body. Position window so that the distance between the windshield and the body are even.
   - Using a wax pencil, mark mating points on windshield and body (Figure 9).

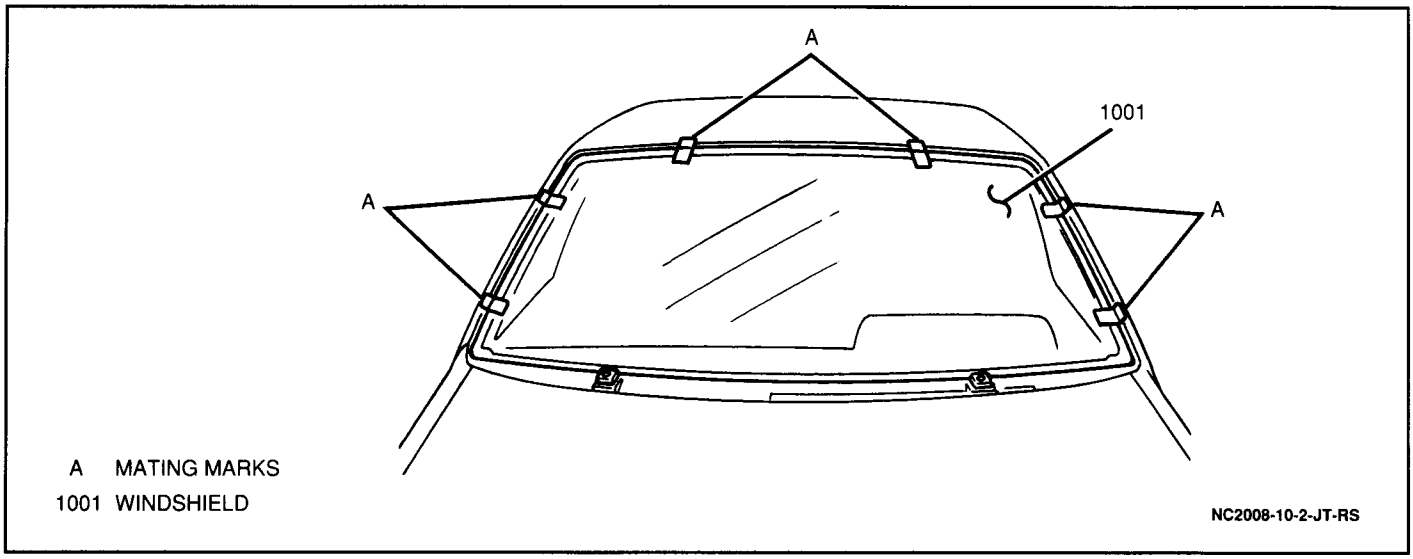

Figure 9 Windshield Mating Marks

- Remove windshield.
- Using a new brush, apply primer to body surface where windshield is to be adhered (Figure 10).

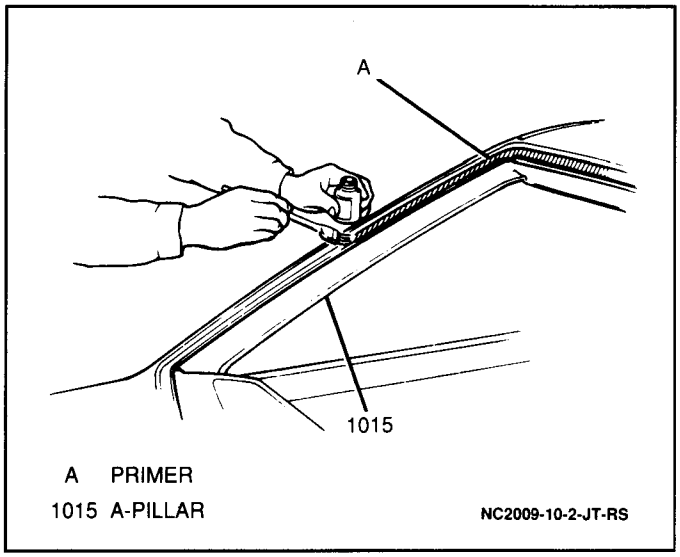

Figure 10 Applying Primer to Body Surface

- Using a new brush, apply primer to edge of windshield (Figure 11).

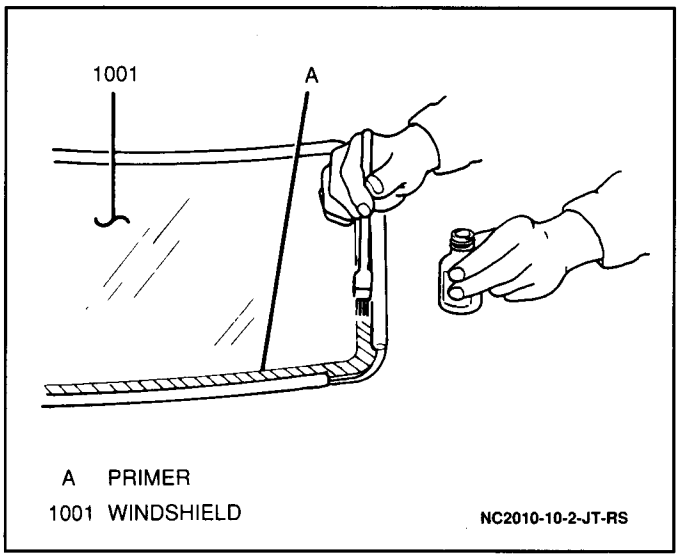

Figure 11 Applying Primer to Windshield

Important

- Refer to manufacturer's instructions for proper handling instructions and drying time.
- Do not touch primer-coated surface.

- Using a cartridge-type caulking gun, apply a smooth continuous bead of urethane adhesive around primed surface edge of windshield (Figure 12).

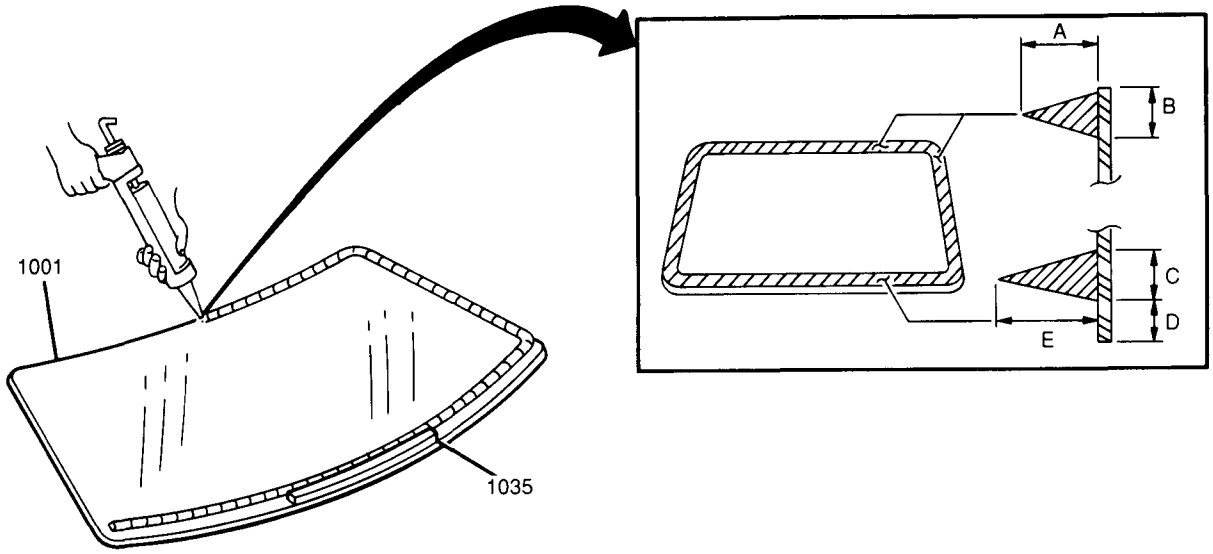

A	16 – 17 mm (0.63 – 0.69")	E	24 – 25 mm (0.94 – 0.98")
B	10 – 11 mm (0.39 – 0.43")	1001	WINDSHIELD
C	10 – 12 mm (0.39 – 0.47")	1035	WINDSHIELD SPACER
D	11 mm (0.43")		

NC5505-10-2-JT-RS

Figure 12 Applying Adhesive to Windshield

Important

- Apply adhesive starting at bottom side of windshield.
- Be careful not to damage primer.
- Adhesive height for upper left and right sides of windshield should be 16 to 17 mm (0.63 to 0.69-inch). For the bottom of the windshield, adhesive height should be 24 to 25 mm (0.94 to 0.98-inch) (Figure 12).

- Peel remaining paper from windshield spacer.
- Using rubber suction cups, and with the assistance of another technician, install the windshield, aligning mating marks (Figure 13).

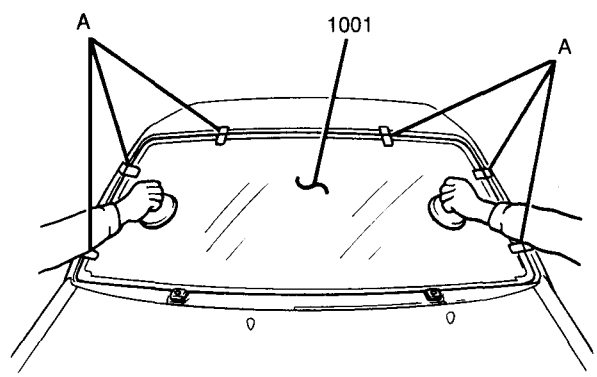

A MATING MARKS
1001 WINDSHIELD
NC2011-10-2-JT-RS

Figure 13 Installing Windshield

- Press window firmly to set adhesive. Use care to avoid excessive adhesive squeezeout which would cause an appearance problem. Using a small disposable brush or flat-bladed tool, paddle material around edge of window to ensure a watertight seal. If necessary, apply more adhesive to underfilled parts. Wipe away excess adhesive, if any.
- Fit new reveal molding onto windshield. Warming molding for ½ hour at 35° C (95°F) will facilitate molding installation.
- Watertest the vehicle at once using soft spray. Use warm or hot water if available. Do not direct a hard stream of high-pressure water at fresh adhesive material. If any leaks are found, dry the window and paddle in extra adhesive at leak point using a plastic paddle, small disposable brush or flat-bladed tool. If leak persists, remove window and repeat entire procedure. Refer to SECTION 10-1 for watertest procedures.

6. Cowl vent grilles to vehicle; secure with nine plastic retaining clips.
7. Washer hoses to cowl vent grilles; clip into place.
8. Wiper arms to vehicle; secure each with one retaining nut.

Tighten

- Wiper arm retaining nuts to 20 N·m (15 lb.ft.).

Important

- Do not drive vehicle until adhesive is set.
- Water applied on top of urethane adhesive, either during watertest or as a separate operation, will speed the cure of the urethane.
- Do not use compressed air, heat or infrared light to accelerate drying time. Allow adhesive to dry normally.
- Slamming the vehicle doors before adhesive sets may cause the windshield to shift or become loose.

Extended Method

The extended method is used when the old adhesive cannot act as a base for new window installation adhesive. When the vehicle undergoes body damage repair or repainting, the old adhesive must be completely removed from the body window opening. Tape body around windshield opening to help prevent paint damage. Use a sharp scraper or chisel to remove old adhesive.

With the exception of the amount of adhesive applied during installation, the extended method is identical to the short method.

ADHESIVE BEAD HEIGHT:
Extended Method — 8 to 10 mm
(0.3 to 0.4-inch).

Rear Door Window

Short Method

Figures 2 through 5 and 7

Remove or Disconnect

1. Spare tire cover.
2. Spare tire lock, two wheel nuts and remove spare tire from vehicle.
3. One retaining nut and rear wiper arm from vehicle (if equipped).
- Unclip rear garnish and remove from lower, right side of rear door.
- Pull two upper and one lower reveal molding joints from rear door.
- Cut lower reveal molding and remove from rear door.
- Pull the right and left-side reveal moldings from rear door.
- Pull the upper reveal molding from the rear door.
4. Rear defogger electrical connectors (if equipped).
- Cover body surface around rear door window with tape to prevent damage.
- Punch hole through adhesive with eyeleteer (Figure 3) and slip piano wire through adhesive.
- Twist ends of piano wire around wood dowels.
- Cut adhesive all around window with piano wire (Figures 4 and 5).

NOTICE: Keep piano wire as close to window as possible to avoid damage to vehicle body.

5. Back door window from vehicle.
6. Rubber dam from rear door window opening.
- Using a knife cleaned with alcohol or petroleum distillate (to remove any dirt or oil), trim remaining adhesive to a uniform thickness (Figure 7).

Clean

- Any loose material from windshield opening. If windshield will be reused, all urethane must be removed from it.

Install or Connect

Clean

- Surface of window to which adhesive will be applied (around edge of inside surface) with a clean, alcohol-dampened cloth. Allow to air dry for at least ten minutes.

- Using a new brush, apply primer to body surface where window is to be adhered.
- Using a new brush, apply primer to edge of window.

Important

- Refer to primer manufacturer's instructions for proper handling instructions and drying time.

- Using a cartridge-type caulking gun, apply a 3.5 to 5 mm (0.14 to 0.2-inch) bead of urethane adhesive around primed surface edge of window.
1. Lower reveal molding to rear door window.
- With help from an assistant, and using rubber suction grips, install window onto rear door.
- Press window firmly to set adhesive. Use care to avoid excessive adhesive squeezeout which would cause an appearance problem. Using a small, disposable brush or flat-bladed tool, paddle material around edge of window to ensure a watertight seal. If necessary, apply more adhesive to underfilled parts. Wipe away excess adhesive, if any.
2. Upper reveal molding to rear door; press into place starting from the center of the molding.
3. Right- and left-side reveal moldings to rear door; press into place starting from the center of the molding.
- Watertest the vehicle at once using soft spray. Use warm or hot water if available. Do not direct a hard stream of high-pressure water at fresh adhesive material. If any leaks are found, dry the window and paddle in extra adhesive at leak point using a plastic paddle, small disposable brush or flat-bladed tool. If leak persists, remove window and repeat entire procedure. Refer to SECTION 10-1 for watertest procedures.
4. Rear defogger electrical connectors (if equipped).
5. Rear wiper arm (if equipped); secure with one retaining nut.

Tighten

- Rear wiper arm retaining nut to 20 N·m (15 lb.ft.).

6. Spare tire to rear door; secure with two wheel nuts and lock.

Tighten

- Spare tire wheel nuts to 54 N·m (40 lb.ft.).

7. Spare tire cover.

Important

- Do not drive vehicle until adhesive is set.
- Water applied on top of urethane adhesive, either during watertest or as a separate operation, will speed the cure of the urethane.
- Do not use compressed air, heat or infrared light to accelerate drying time. Allow adhesive to dry normally.
- Slamming the vehicle doors before adhesive sets may cause the window to shift or become loose.

Extended Method

The extended method is used when the old adhesive cannot act as a base for new window installation adhesive. When the vehicle undergoes body damage repair or repainting, the old adhesive must be completely removed from the body window opening. Tape body around rear door window opening to help prevent paint damage. Use a sharp scraper or chisel to remove old adhesive.

With the exception of the amount of adhesive applied during installation, the extended method is identical to the short method.

ADHESIVE BEAD HEIGHT:
Extended Method — 8 to 10 mm
(0.3 to 0.4-inch).

REAR WINDOW DEFOGGER

The optional rear window defogger system consists of a rear window defogger switch, a rear window that has a number of horizontal ceramic silver compound element lines and two vertical bus bars on the inside surface of the rear window. The feed terminal (+) is soldered to the bus bar on the right side. The ground terminal (-) is soldered to the bus bar on the left side.

Testing Grid Lines

Figure 14

Tool Required:
J 34029-A Digital Multimeter

To locate inoperative grid lines, start engine and turn on the rear window defogger system. Ground the negative (-) lead of a J 34029-A and lightly touch the positive (+) lead to each grid line. Voltage will decrease as the lead is moved farther away from the feed bus bar (Figure 14). If the J 34029-A shows high voltage at both ends of grid lines, check for a loose ground terminal-to-bus bar connection or a loose ground wire-to-body connection.

All grid lines must be tested in at least two places to eliminate the possibility of bridging a break. For best results, contact each grid line a few millimeters on either side of window centerline. If an abnormal meter reading is apparent on a specific grid line, place the lead on that grid and move the lead until voltage drops significantly. This will indicate a break in the continuity of the grid line. Refer to SECTION 8A for electrical diagnosis of the rear window defogger system.

Grid Line Repair

Figures 15 and 16

Important

- All materials needed for rear window defogger grid line repair are included in the rear defogger repair kit GM P/N 12345345. An equivalent repair material may also be used.

1. Disconnect negative (-) battery cable.
2. Disconnect the rear window defogger battery feed wire.

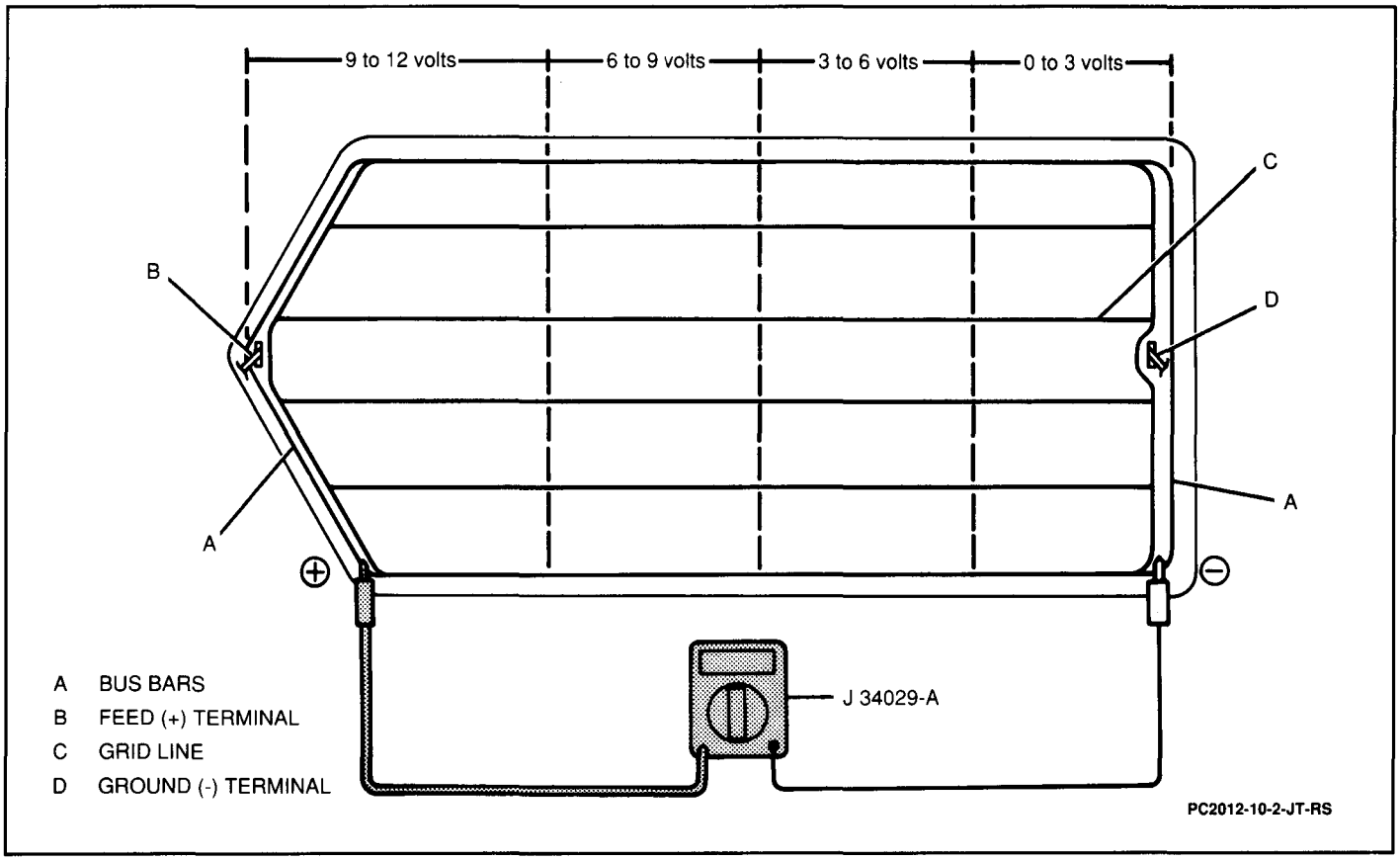

Figure 14 Testing Grid Lines

Inspect

- Rear window defogger grid lines for breaks.
- Mark grid line breaks on outside of window with a wax pencil or crayon.

Clean

- Grid line area to be repaired. Buff with steel wool and wipe clean using cloth dampened with alcohol or white gas. Buff and clean about 6 mm (0.25-inch) beyond each side of break in grid line.

3. Install grid line repair decal or two strips of tape positioned above and below repair area.
   - Repair decal or tape MUST be used to control width of repair area.
   - If decal is used, be sure the die-cut metering slot is the same width as the grid line.
4. Mix grid repair material according to repair material manufacturer's instructions.
5. At room temperature, apply grid repair material to repair area using a small, plastic paddle (or equivalent) (Figure 15).

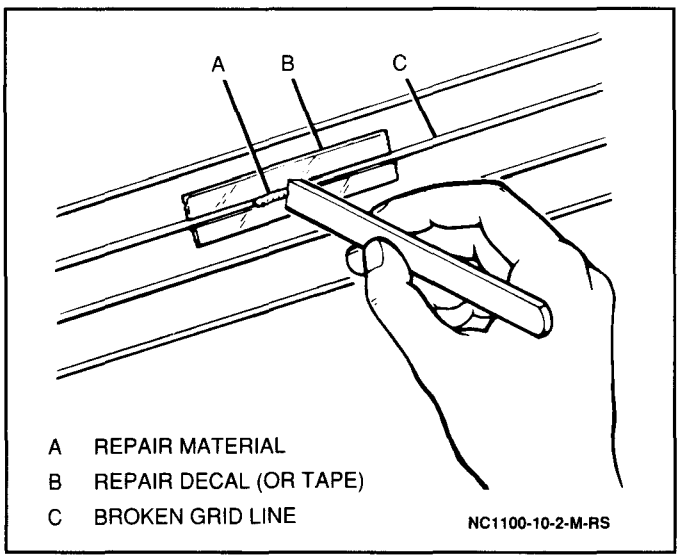

Figure 15 Grid Line Repair

6. Carefully remove the decal or tape.

   NOTICE: The grid line repair material must be cured with heat. To avoid heat damage to interior trim, protect the trim near the repair area where heat is to be applied.
7. Using a heat gun apply heat to repair area for 1 to 2 minutes (Figure 16).
   - Hold heat gun nozzle 25 mm (1-inch) from surface.
   - Minimum temperature of 149° C (300° F) is required.

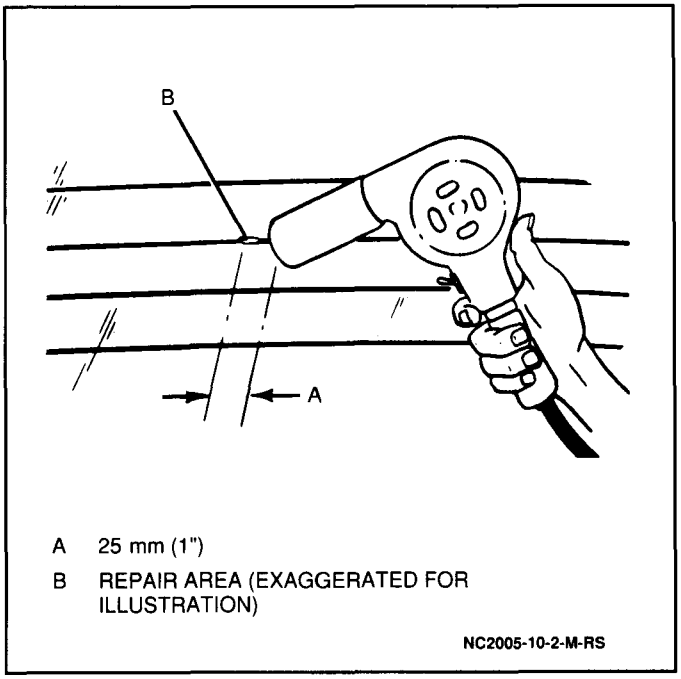

Figure 16 Applying Heat to Grid Line Repair

Inspect

- Grid line repair area. If the repair appears discolored, apply a coating of tincture of iodine to repair area using a pipe cleaner or fine brush. Allow iodine to dry for about 30 seconds and carefully wipe off excess with lint-free cloth.

8. Connect negative (-) battery cable.

Tighten

- Negative (-) battery cable-to-negative (-) battery terminal retainer to 15 N·m (11 lb.ft.).

9. Test defogger operation to verify grid line repair.

   NOTICE: At least 24 hours are required for complete curing of repair materials. The repair area should not be physically disturbed until after that time.

Bus Bar Lead Terminal Repair

The rear defogger bus bar lead terminals can be reattached by resoldering, using a solder containing 3% silver and a rosin flux paste.

1. Before soldering the bus bar lead terminal, repair area should be buffed with fine steel wool.
2. Apply the paste-type rosin flux in small quantities to the bus bar lead terminal repair area using a brush.
3. The soldering iron tip should be coated with solder beforehand. Use only enough heat to melt the solder and only enough solder to ensure a complete repair.
4. Do not overheat the terminal when resoldering.

SPECIFICATIONS

FASTENER TORQUES

Wiper Arm Retaining Nuts	20 N·m (15 lb.ft.)
Spare Tire Wheel Nuts	54 N·m (40 lb.ft.)
Negative (-) Battery Cable-to-Negative (-) Battery Terminal Retainer	15 N·m (11 lb.ft.)

SERVICE PARTS INFORMATION

Component Name Used in Section 10-2	Reference Name in Service Parts Catalog	Group Number
Rear Door Window	Glass, Rear Door Window	17.190
Rear Door Window Upper Reveal Molding	Molding, Rear Door Window Upper	17.190
Rear Door Window Lower Reveal Molding	Molding, Rear Door Window Lower	17.190
Rear Door Window Right-Side Reveal Molding	Molding, Rear Door Window RH	17.190
Rear Door Window Left-Side Reveal Molding	Molding, Rear Door Window LH	17.190
Rear Door Window Upper Reveal Molding Joint	Joint, Rear Door Window Molding Upper	17.190
Rear Door Window Lower Reveal Molding Joint	Joint, Rear Door Window Molding Lower	17.190
Windshield	Glass, Windshield	16.005
Windshield Reveal Molding	Molding, Front Windshield Upper	16.041

SPECIAL TOOLS

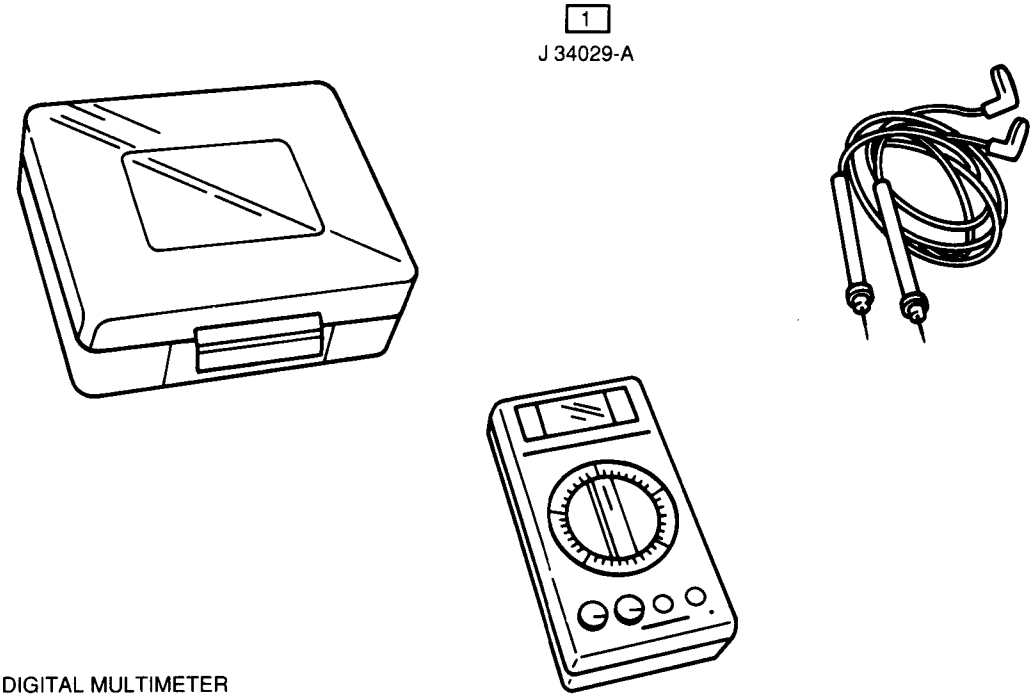

1 DIGITAL MULTIMETER

NC0003-10-2-M-RS

SECTION 10-3
UNDERBODY

NOTICE: The theft deterrent label found on some major sheet metal, engines, and transmissions must be masked prior to painting, rustproofing, undercoating, etc. The mask must be removed following the above procedures. Failure to keep the label clean and readable may result in liability for violation of Federal Vehicle Theft Prevention Standard and subject the vehicle owner to possible suspicion that the part was stolen.

NOTICE: When fasteners are removed, always reinstall them at the same location from which they were removed. If a fastener needs to be replaced, use the correct part number fastener for that application. If the correct part number is not available, a fastener of equal size and strength (or stronger) may be used. Fasteners that are not reused, and those requiring thread-locking compound, will be called out. The correct torque values must be used when installing fasteners that require them. If the above procedures are not followed, parts or system damage could result.

CONTENTS

General Description 10-3-1
General Body Construction 10-3-1
On-Vehicle Service 10-3-1
Alignment Checking 10-3-1
Floor Pan Insulators 10-3-2
Floor Carpet 10-3-4
Front Floor Carpet 10-3-4
Rear Floor Carpet 10-3-4
Rear Sill Plate 10-3-5
Underbody Dimensions 10-3-5
Specifications 10-3-10
Fastener Torques 10-3-10
Service Parts Information 10-3-10

GENERAL DESCRIPTION

GENERAL BODY CONSTRUCTION

This vehicle features a unitized body, which is welded to the frame and standard frame-to-body mounts are not used. The engine, front suspension and lower control arms are tied to the body frame.

Mounting provisions for the front suspension system are shared by chassis components (suspension lower control arms and body frame) and body components (engine compartment side panels). The suspension towers must be dimensionally correct in relation to the remainder of the underbody in order to maintain specified suspension strut and caster/camber angles.

Since the individual underbody components also contribute directly to the overall strength of the body, it is essential that proper welding techniques be observed during service repair operations. The underbody components should be properly sealed and rustproofed whenever body repair operations destroy or damage the original sealing or rustproofing. When rustproofing critical underbody components, it is essential to use a quality air dry primer such as corrosion-resistant chromate, or equivalent. Combination type primer-surfaces are not recommended.

ON-VEHICLE SERVICE

ALIGNMENT CHECKING

An accurate method of determining the alignment of the underbody utilizes a measuring tram gage. The tram gage set required to perform the recommended measuring checks must include a vertical pointer capable of reaching 914 mm (36-inches).

Two types of measurements can be made with a tram gage: direct point-to-point measurements and measurements calculated on a horizontal plane (datum line) parallel to the underbody. In the latter case, the height or vertical pointers must be set as specified for each point to be measured.

Point-to-point measurements are generally taken on front structure steering and suspension components and simply require the vertical pointers to be equally set. In some cases point-to-point measurements may be directly taken with a tape measure or other appropriate measuring tool.

Dimensions-to-gage holes are measured to the leading edge or center of the holes and flush to adjacent surface metal. Refer to "Underbody Dimensions" later in this section for alphabetically identified points of measurements.

FLOOR PAN INSULATORS

Floor pan insulators have been designed for higher floor pan temperatures that result from the use of the catalytic converter in the exhaust system. Floor pan insulators also act as silencers and help reduce the exterior noise level within the passenger compartment. Therefore, when servicing a vehicle in the field, it is essential that any insulator that may have been disturbed or removed be reinstalled in the original sequence and location. Also, if it becomes necessary to replace an insulator, the material specified for that particular location on the floor pan must be used.

CAUTION: All replacement insulator materials must meet Motor Vehicle Safety Standard No. 302 for flammability, or vehicle damage and personal injury could result.

- **Insulators must be installed in their original positions and sequence. The sheets should be butted together in order to avoid gapping or overlapping.**
- **When installing a floor pan insulator, do not enlarge cutouts or holes that are used for the attachment of interior components such as seats or seat belts.**
- **Cross-body harnesses for interior components such as the seat belt indicator and alarm or rear speakers must be routed over the floor pan insulator in their original position and clipped into place.**
- **Spray-on deadeners and trim adhesives should not be applied to the top of the floor pan at the area directly over the catalytic converter or muffler.**

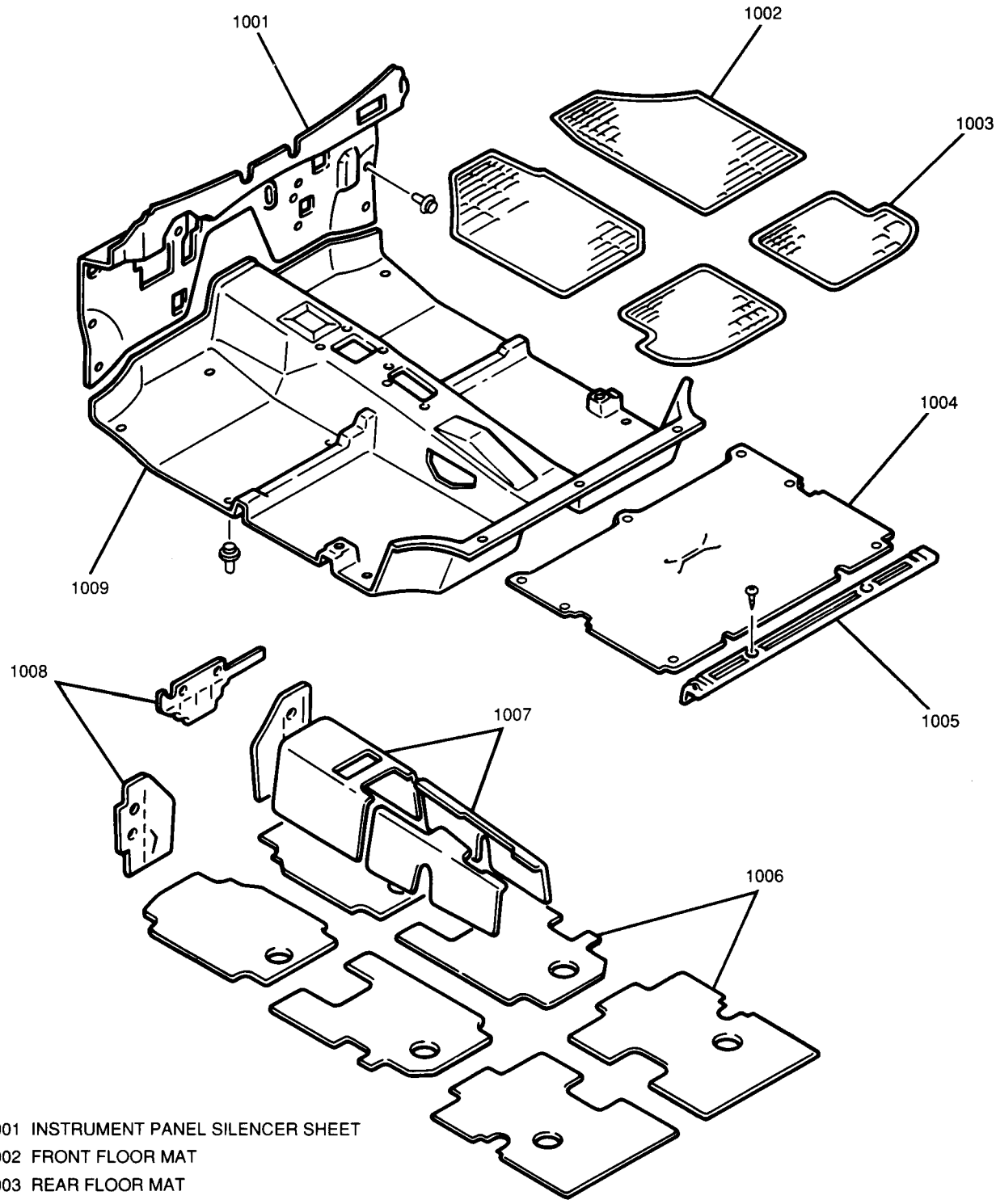

1001 INSTRUMENT PANEL SILENCER SHEET
1002 FRONT FLOOR MAT
1003 REAR FLOOR MAT
1004 REAR FLOOR CARPET
1005 REAR SILL PLATE
1006 FLOOR PAN INSULATORS
1007 FLOOR TUNNEL INSULATORS
1008 INSTRUMENT PANEL INSULATOR
1009 FRONT FLOOR CARPET

NC3258-10-3-JT-RS

Figure 1 Floor Carpet

FLOOR CARPET

Front Floor Carpet

Figures 1 and 2

Remove or Disconnect

- Unclip jack handle located under left front seat and remove from vehicle.
- Unclip wheel nut wrench located under right front seat and remove from vehicle.
- Unclip jack located under right front seat and remove from vehicle.

1. Front and rear seats. Refer to SECTION 10-10.
2. Two screws, two plastic retaining clips and console box from vehicle (Figure 2).
3. Two screws, one plastic retaining clip and parking brake lever trim bezel from vehicle (Figure 2).

- Lift plastic covers to gain access to each front seat belt buckle anchor bolt.

4. One anchor bolt from each front seat belt buckle and remove buckles from vehicle.
5. Electrical connector from left front seat belt buckle.
6. Four plastic retainers attaching carpet to the bulkhead.

- Three plastic clips from rear of carpet and carpet from vehicle.

Install or Connect

1. Carpet into vehicle.
2. Three plastic clips to rear of carpet.
3. Left front seat belt buckle electrical connector.
4. Front seat belt buckles to vehicle; secure each with one anchor bolt.

Tighten

- Front seat belt buckle anchor bolts to 45 N·m (33 lb.ft.).

- Lower plastic covers onto front seat belt buckle anchor bolts.

5. Parking brake lever trim bezel to vehicle; secure with two screws and one plastic retaining clip (Figure 2).
6. Console box to vehicle; secure with two screws and two plastic retaining clips (Figure 2).
7. Front and rear seats. Refer to SECTION 10-10.
8. Jack to vehicle, clip into place under right front seat.
9. Wheel nut wrench to vehicle, clip into place under right front seat.
10. Jack handle to vehicle, clip into place under left front seat.

Rear Floor Carpet

Figure 1

Remove or Disconnect

- Pull rear seat lock handle and raise rear seat cushion.

1. Three plastic clips from front of rear floor carpet.
2. Four screws and rear sill plate from vehicle (Figure 1).
3. Rear floor carpet from vehicle.

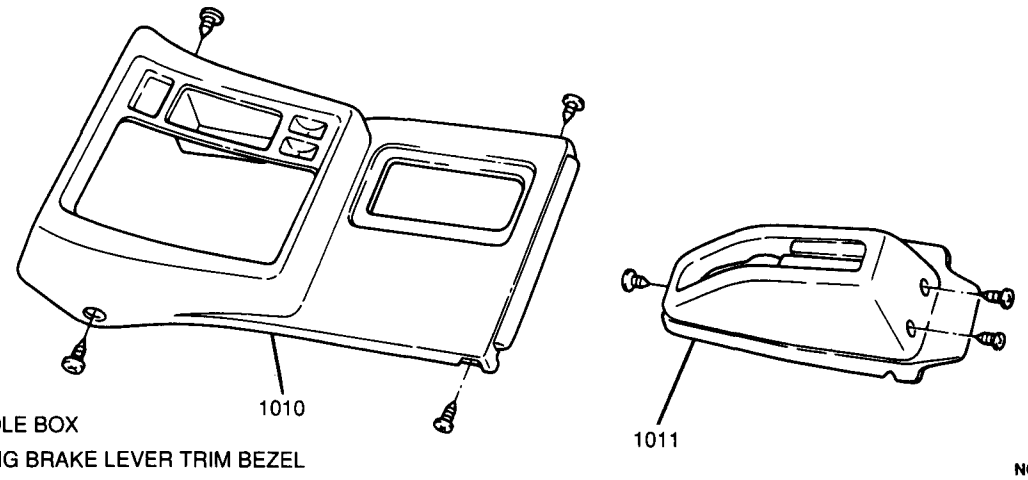

Figure 2 Console Box and Parking Brake Lever Trim Bezel

Install or Connect

1. Rear floor carpet to vehicle.
2. Rear sill plate to vehicle; secure with four screws (Figure 1).
3. Three plastic retaining clips to front of rear floor carpet.

- Lower rear seat cushion.

REAR SILL PLATE

Remove or Disconnect

- Four screws and rear sill plate from vehicle.

Install or Connect

- Rear sill plate to vehicle; secure with four screws.

UNDERBODY DIMENSIONS

Figures 3 through 6

Refer to Figures 3 through 6 for underbody dimension measurements. Each underbody component affects the strength of the vehicle itself as well as the wheel alignment (toe-in, camber, caster). It is essential, therefore, to inspect the underbody carefully after completing any underbody repairs (welding, etc.). When damage is found in sealing or rustproofing treatment, it is essential that the problem be corrected properly. Refer to SECTION 10-1 for sealing and rustproofing treatment information.

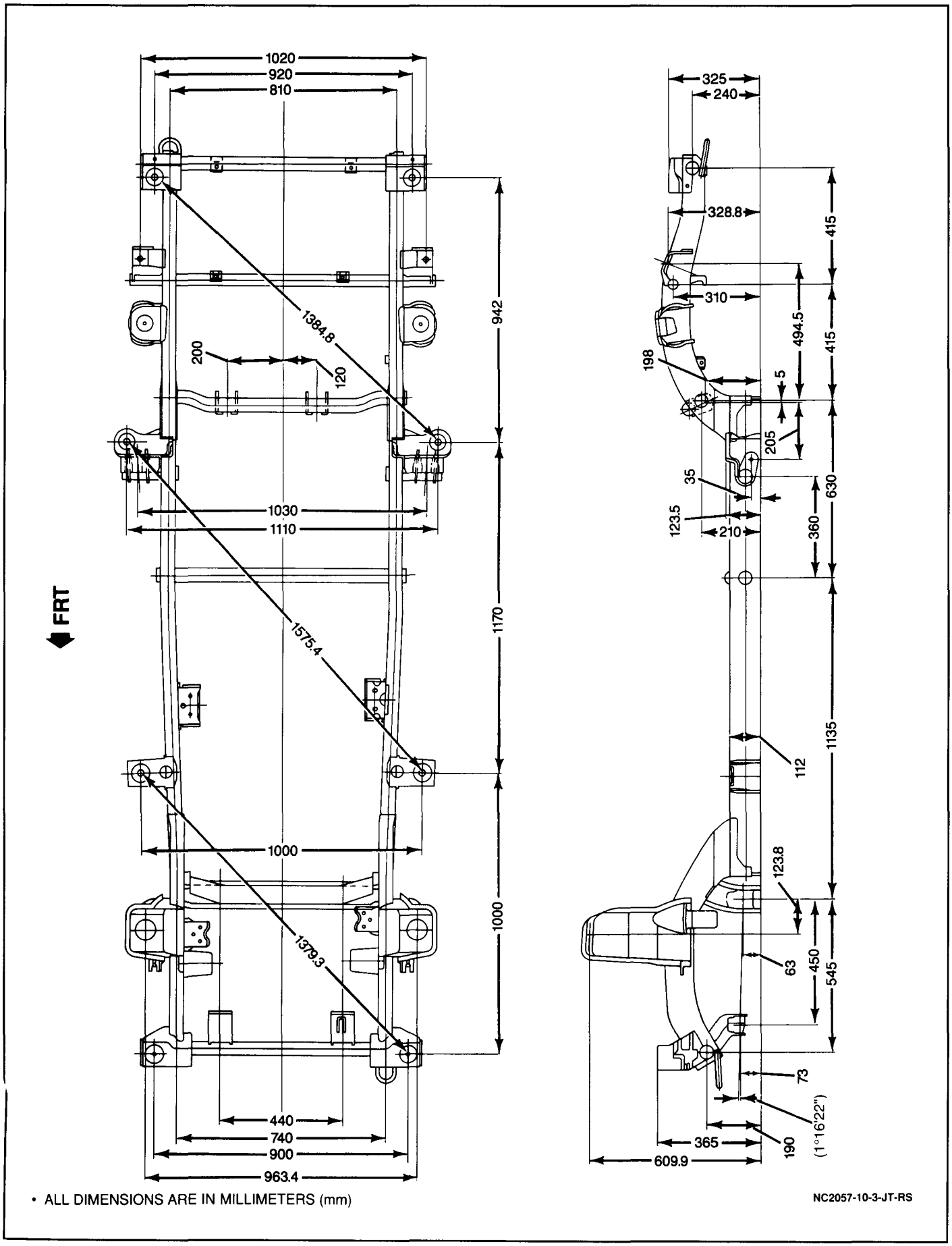

Figure 3 Underbody Dimensions

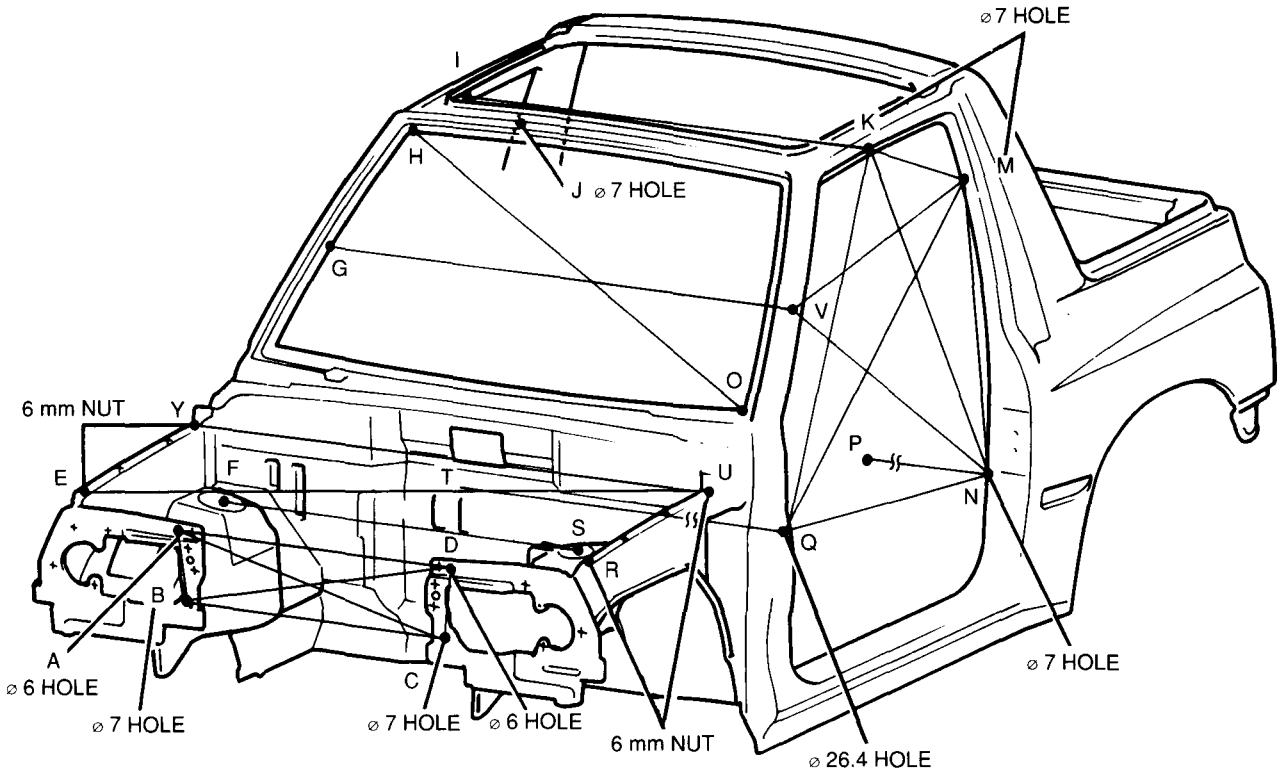

MEASUREMENT POSITION	DISTANCE BETWEEN CONTROL POINTS	MEASUREMENT POSITION	DISTANCE BETWEEN CONTROL POINTS
A – B	174 mm (6.85")	Q – N	1048 mm (41.26")
A – D	730 mm (28.74")	N – M	703 mm (27.68")
A – C	738 mm (29.06")	M – K	390 mm (15.35")
B – D	738 mm (29.06")	K – Q	1039 mm (40.91")
B – C	730 mm (28.74")	K – N	914 mm (35.98")
D – C	174 mm (6.85")	M – Q	1233 mm (48.54")
Y – E	526 mm (20.71")	M – V	869 mm (34.21")
E – U	1450 mm (57.09")	K – I	1077 mm (42.40")
E – R	1351 mm (53.19")	M – J	1162 mm (45.75")
Y – U	1351 mm (53.19")	V – G	1242 mm (48.90")
F – S	952 mm (37.49")	N – P	1327 mm (52.24")
H – O	1272 mm (50.08")	Q – T	1434 mm (56.46")
K – V	567 mm (22.32")	N – V	1011 mm (39.80")
V – Q	530 mm (20.87")		

NC2060-10-3-JT-RS

Figure 4 Body Dimensions (1 of 2)

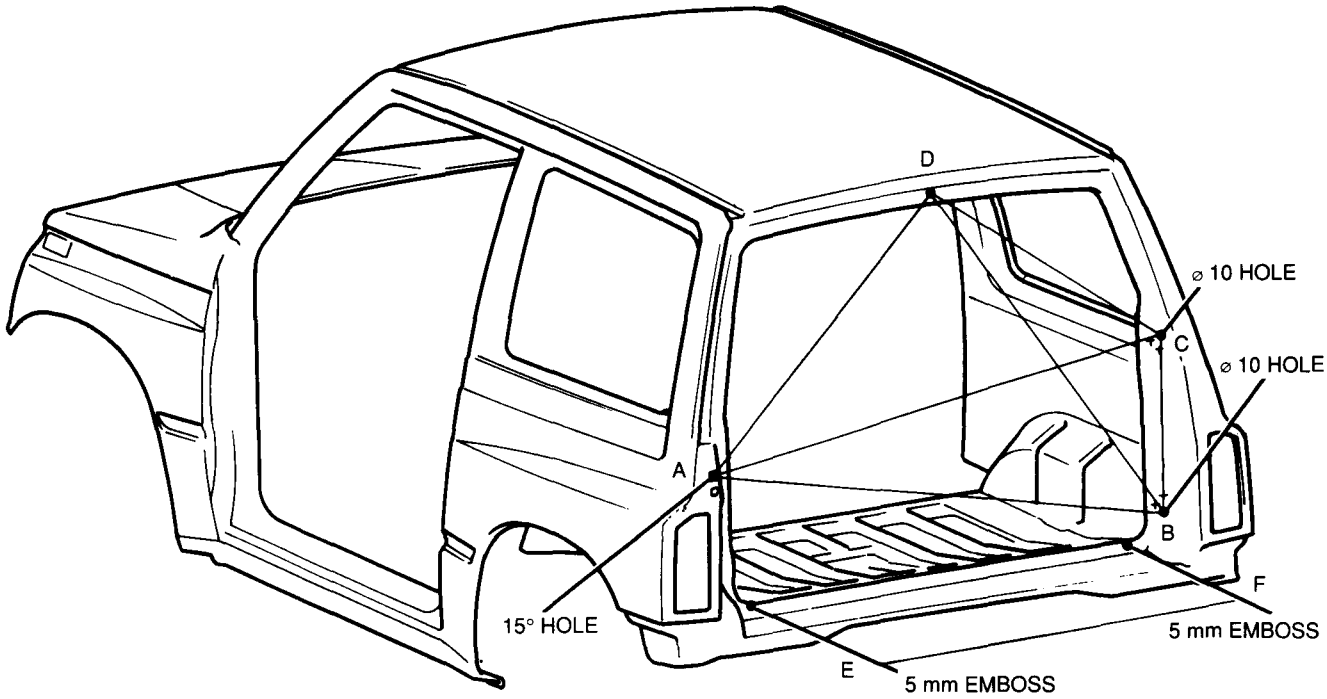

MEASUREMENT POSITION	DISTANCE BETWEEN CONTROL POINTS
A – B	1256 mm (49.45")
B – C	429 mm (16.89")
C – D	702 mm (27.64")
D – A	876 mm (34.49")
D – B	1013 mm (39.88")
A – C	1238 mm (48.74")
E – F	1003 mm (39.49")

NC2058-10-3-JT-RS

Figure 5 Body Dimensions (2 of 2) — Hardtop Models

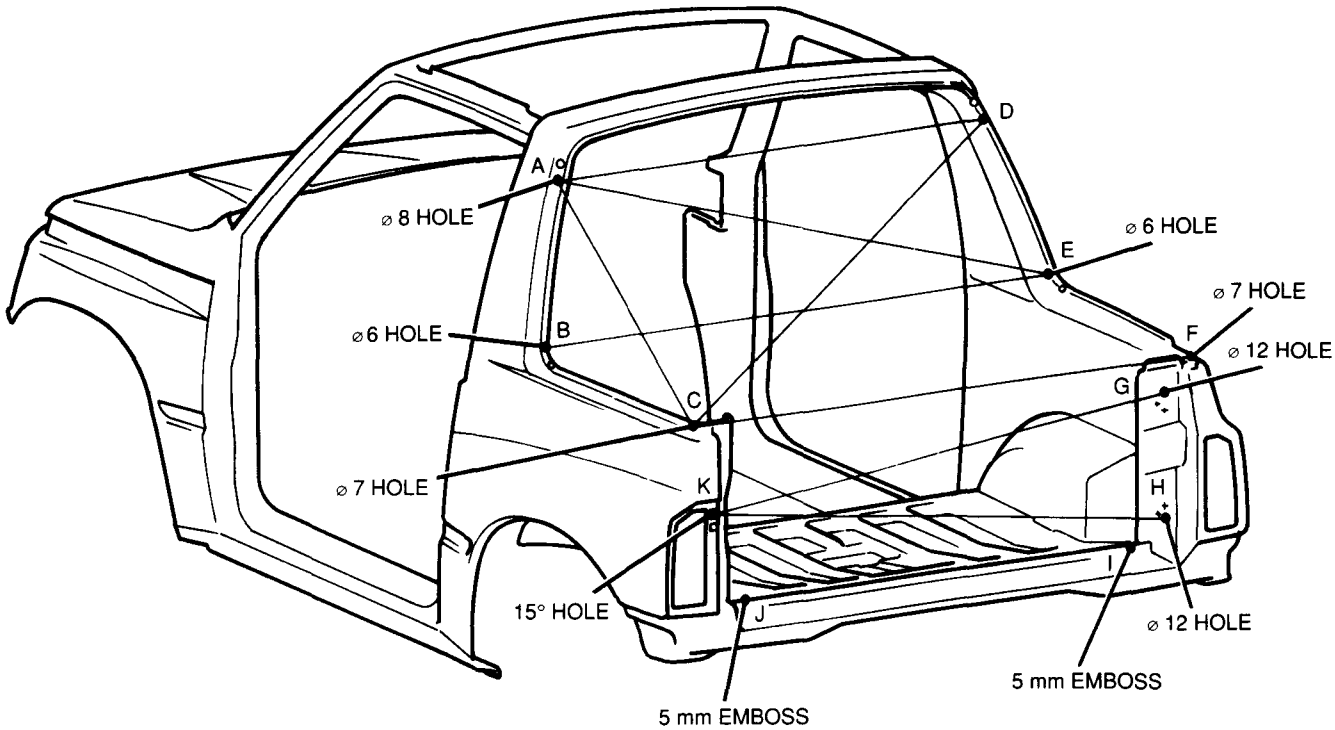

MEASUREMENT POSITION	DISTANCE BETWEEN CONTROL POINTS	MEASUREMENT POSITION	DISTANCE BETWEEN CONTROL POINTS
A – B	405 mm (15.94")	C – F	1329 mm (52.32")
A – D	1149 mm (45.24")	G – H	308 mm (12.13")
A – E	1318 mm (51.89")	G – K	1243 mm (48.94")
B – C	665 mm (26.18")	J – I	1003 mm (39.49")
B – E	1371 mm (53.98")	A – C	896 mm (35.28")
C – D	1526 mm (60.09")	H – K	1247 mm (49.09")

NC2059-10-3-JT-RS

Figure 6 Body Dimensions (2 of 2) — Convertible Models

SPECIFICATIONS

FASTENER TORQUES

Front Seat Belt Buckle Anchor Bolt ..... 45 N·m (33 lb.ft.)

SERVICE PARTS INFORMATION

Component Name Used in Section 10-3	Reference Name in Service Parts Catalog	Group Number
Front Floor Carpet	Carpet, Front Floor	16.850
Rear Floor Carpet	Carpet, Rear Floor	16.850
Rear Sill Plate	Garnish, Rear Floor Luggage Mat End.	16.603
Front Floor Insulator	Insulation, Front Floor Noise Silencer	16.800
Rear Floor Insulator	Insulation, Rear Floor Noise Silencer	16.800

SECTION 10-4

BUMPERS

NOTICE: The theft deterrent label found on some major sheet metal, engines, and transmissions must be masked prior to painting, rustproofing, undercoating, etc. The mask must be removed following the above procedures. Failure to keep the label clean and readable may result in liability for violation of Federal Vehicle Theft Prevention Standard and subject the vehicle owner to possible suspicion that the part was stolen.

NOTICE: When fasteners are removed, always reinstall them at the same location from which they were removed. If a fastener needs to be replaced, use the correct part number fastener for that application. If the correct part number fastener is not available, a fastener of equal size and strength (or stronger) may be used. Fasteners that are not reused, and those requiring thread-locking compound, will be called out. The correct torque values must be used when installing fasteners that require them. If the above procedures are not followed, parts or system damage could result.

CONTENTS

General Description 10-4-1
Theft Deterrent Labels 10-4-1
Bumpers 10-4-1
Energy Absorbers 10-4-1
On-Vehicle Service 10-4-2
Front Bumper Fascia 10-4-2
Front Bumper Impact Bar 10-4-3
Front Bumper Energy Absorber 10-4-3
Rear Bumper Fascia 10-4-4
Rear Bumper Impact Bar 10-4-5
Specifications 10-4-5
Fastener Torques 10-4-5
Service Parts Information 10-4-5

GENERAL DESCRIPTION

THEFT DETERRENT LABELS

Federal law requires General Motors to label major parts of the vehicle with a theft deterrent label. The theft deterrent label is permanently affixed to the interior surface of the front and rear bumpers and contains the complete vehicle identification number (VIN).

Important

- THESE LABELS ARE NOT TO BE DEFACED, REMOVED OR COVERED OVER. The labels must be shielded from paint, rustproofing and undercoating (dealer preparation included).

For further information on theft deterrent labels, refer to SECTION 0A.

BUMPERS

For painting and refinishing procedures for the front and rear bumper fascia, refer to SECTION 10-1.

ENERGY ABSORBERS

The front bumper contains an energy absorber which is made of a polypropylene material. The energy absorber is positioned between the bumper impact bar and the bumper fascia. GM vehicle bumpers are designed to withstand a collision into a fixed barrier at 8 km/h (5 mph) and sustain minimal damage. After absorbing the energy of the collision the bumper returns to its original position.

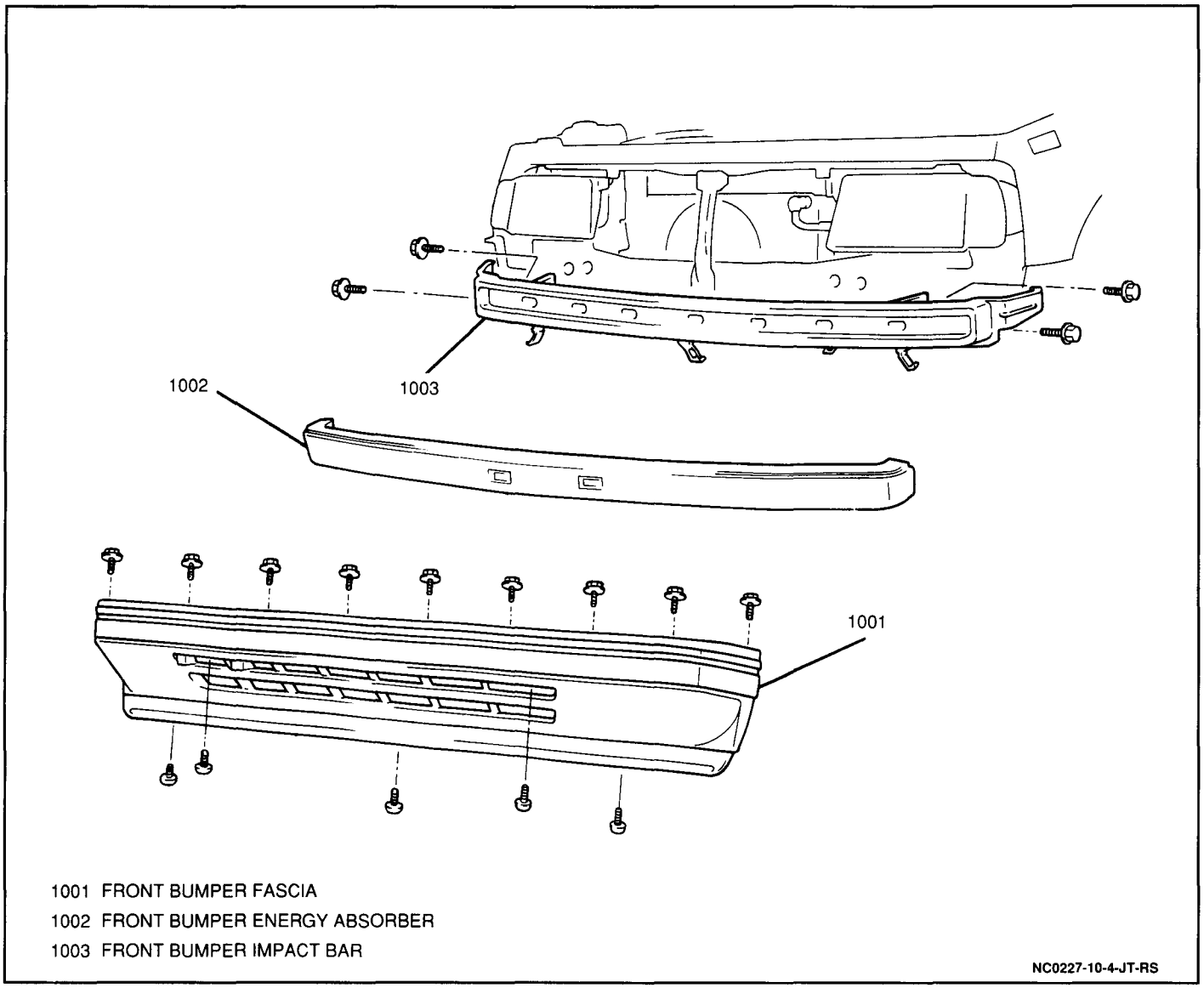

Figure 1 Front Bumper Assembly

ON-VEHICLE SERVICE

FRONT BUMPER FASCIA

Figures 1, 2 and 3

Remove or Disconnect

1. One grille retaining screw accessible through each wheelwell (Figure 2).

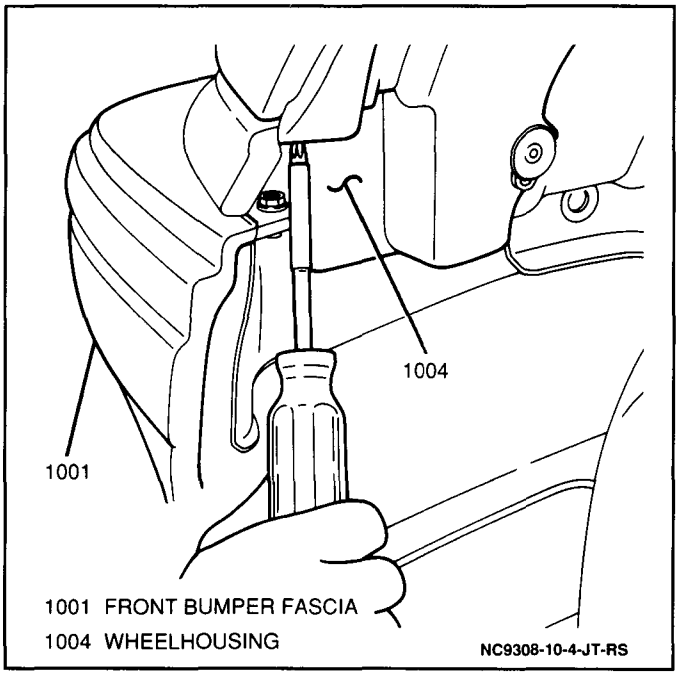

Figure 2 Removing Grille Retaining Screw From Wheelwell

2. One screw from top center of the grille.
3. Two plastic retaining clips and grille from vehicle (Figure 3).

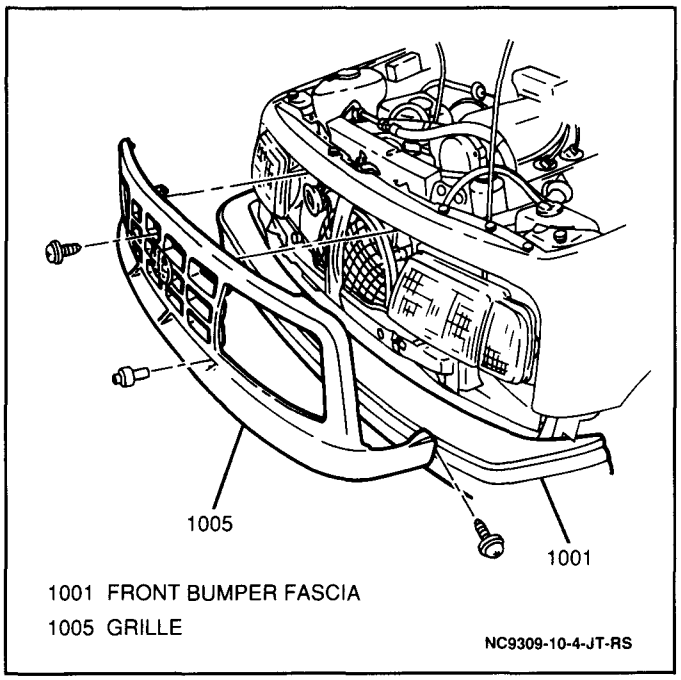

Figure 3 Grille

4. Nine bolts along the top of the front bumper fascia.
5. Five screws from bottom of the front bumper fascia and remove fascia from vehicle.

Install or Connect

1. Front bumper fascia to vehicle; secure with five screws along bottom of fascia.
2. Nine bolts along top of front bumper fascia.

Tighten

- Front bumper fascia bolts to 15 N·m (11 lb.ft.).

3. Grille to vehicle; secure with two plastic retaining clips.
4. One screw to the top center of the grille.
5. One grille retaining screw inside each wheelwell (Figure 2).

FRONT BUMPER IMPACT BAR

Figures 1, 2 and 3

Remove or Disconnect

1. One grille retaining screw accessible through each wheelwell (Figure 2).
2. One screw from top center of the grille.
3. Two plastic retaining clips and grille from vehicle (Figure 3).
4. Nine bolts along the top of the front bumper fascia.
5. Five screws from bottom of front bumper fascia and remove fascia from vehicle.
6. Four bolts and front bumper impact bar from vehicle.

Install or Connect

1. Front bumper impact bar to vehicle; secure with four bolts.

Tighten

- Front bumper impact bar bolts to 27 N·m (20 lb.ft.).

2. Front bumper fascia to vehicle; secure with five screws along bottom of fascia.
3. Nine bolts along the top of the front bumper fascia.

Tighten

- Front bumper fascia bolts to 15 N·m (11 lb.ft.).

4. Grille to vehicle; secure with two plastic retaining clips.
5. One screw to the top center of the grille.
6. One grille retaining screw inside each wheelwell (Figure 2).

FRONT BUMPER ENERGY ABSORBER

Figures 1, 2 and 3

Remove or Disconnect

1. One grille retaining screw accessible through each wheelwell (Figure 2).
2. One screw from top center of the grille.
3. Two plastic retaining clips and grille from vehicle (Figure 3).
4. Nine bolts along the top of the front bumper fascia.
5. Five screws from bottom of front bumper fascia and remove fascia from vehicle.
6. Front bumper energy absorber from front bumper fascia.

Install or Connect

- Insert front bumper energy absorber into front bumper fascia.

1. Front bumper fascia to vehicle; secure with five screws along bottom of fascia.
2. Nine bolts along the top of the front bumper fascia.

Tighten

- Front bumper fascia bolts to 15 N·m (11 lb.ft.).

3. Grille to vehicle; secure with two plastic retaining clips.
4. One screw to the top center of the grille.
5. One grille retaining screw inside each wheelwell (Figure 2).

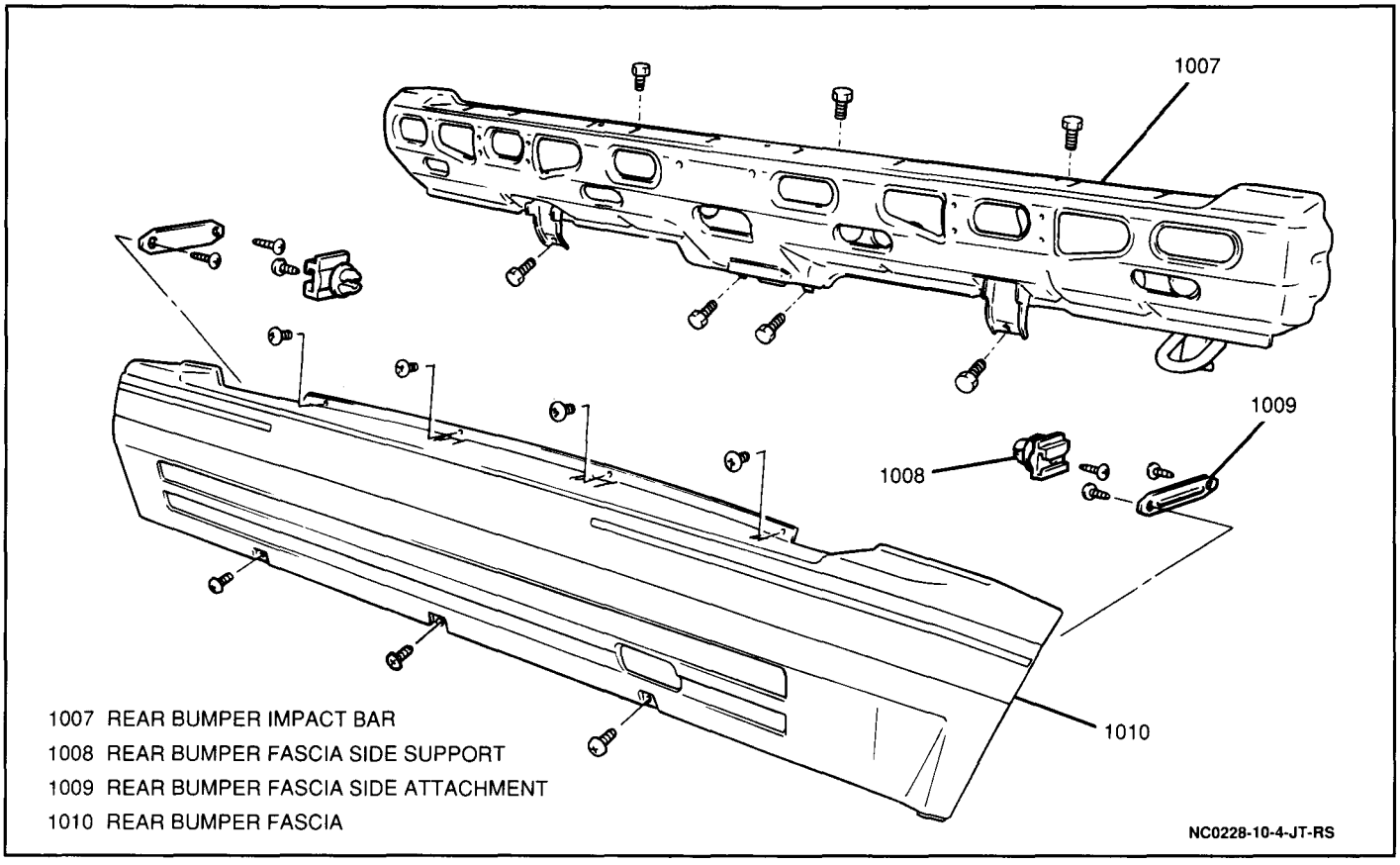

Figure 4 Rear Bumper Assembly

REAR BUMPER FASCIA

Figures 4, 5 and 6

Remove or Disconnect

- Open rear door.

1. Four screws from top of rear bumper fascia.
2. Three screws from bottom of rear bumper fascia.
3. Two bolts and one screw from each rear bumper impact bar lower outside bracket (Figure 5).

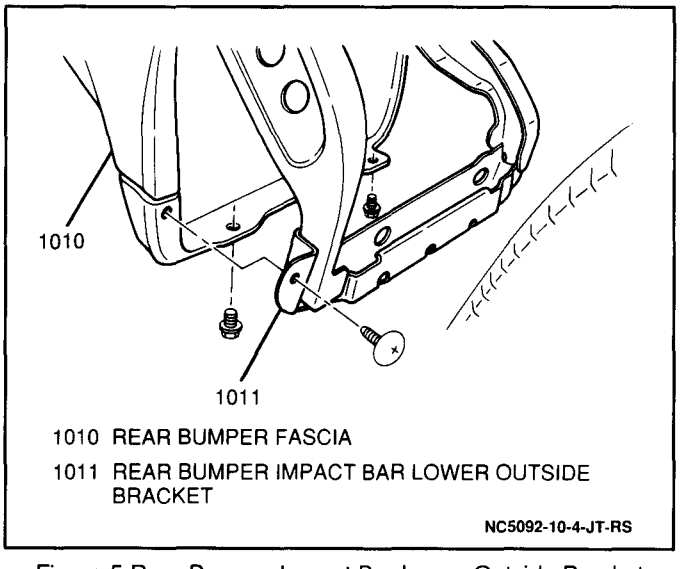

Figure 5 Rear Bumper Impact Bar Lower Outside Bracket

- Slide rear bumper fascia rearward and remove from vehicle.

Install or Connect

- Insert rear bumper fascia side attachments into rear bumper fascia side supports and slide fascia into place (Figure 6).

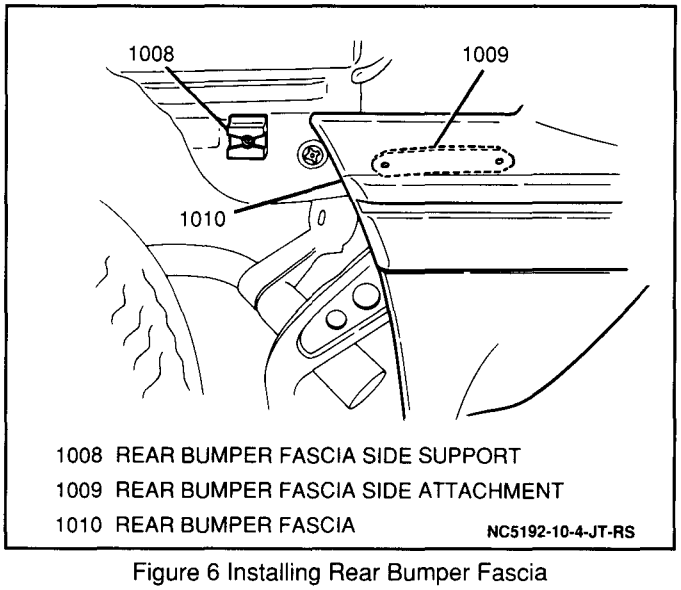

Figure 6 Installing Rear Bumper Fascia

1. Two bolts and one screw to each rear bumper impact bar lower outside bracket (Figure 5).

Tighten

- Rear bumper fascia bolts to 15 N·m (11 lb.ft.).

2. Three screws to bottom of rear bumper fascia.
3. Four screws to top of rear bumper fascia.

- Close rear door.

REAR BUMPER IMPACT BAR

Figures 4, 5 and 6

Remove or Disconnect

- Open rear door.

1. Four screws from top of rear bumper fascia.
2. Three screws from bottom of rear bumper fascia.
3. Two bolts and one screw from each rear bumper impact bar lower outside bracket (Figure 5).

- Slide rear bumper fascia rearward and remove from vehicle.

4. Three bolts along the top of the rear bumper impact bar.
5. Four bolts from bottom of rear bumper impact bar and remove impact bar from vehicle.

Install or Connect

1. Rear bumper impact bar to vehicle; secure with three bolts along top of impact bar and four bolts along bottom of impact bar.

Tighten

- Rear bumper impact bar bolts to 30 N·m (22 lb.ft.).

2. Insert rear bumper fascia side attachments into rear bumper fascia side supports and slide fascia into place (Figure 6).
3. Two bolts and one screw to each rear bumper impact bar lower outside bracket (Figure 5).

Tighten

- Rear bumper fascia bolts to 15 N·m (11 lb.ft.).

4. Three screws to bottom of rear bumper fascia.
5. Four screws to top of rear bumper fascia.

- Close rear door.

SPECIFICATIONS

FASTENER TORQUES

Front Bumper Fascia Bolts	15 N·m (11 lb.ft.)
Front Bumper Impact Bar Bolts	27 N·m (20 lb.ft.)
Rear Bumper Fascia Bolts	15 N·m (11 lb.ft.)
Rear Bumper Impact Bar Bolts	30 N·m (22 lb.ft.)

SERVICE PARTS INFORMATION

Component Name Used in Section 10-4	Reference Name in Service Parts Catalog	Group Number
Front Bumper Energy Absorber	Absorber, Front Bumper	7.840
Front Bumper Fascia	Bumper, Front	7.831
Front Bumper Impact Bar	Member Assembly, Front Bumper.	7.831
Rear Bumper Fascia	Bumper, Rear	7.831
Rear Bumper Fascia Side Attachment	Support, Attachment Bumper Side	7.836
Rear Bumper Fascia Side Support	Support, Rear Bumper Side.	7.836
Rear Bumper Impact Bar	Member, Rear Bumper	7.831
Rear Bumper Impact Bar Lower Outside Bracket	Bracket, Rear Bumper Outside	7.829

SECTION 10-5

BODY FRONT END

NOTICE: The theft deterrent label found on some major sheet metal, engines, and transmissions must be masked prior to painting, rustproofing, undercoating, etc. The mask must be removed following the above operations. Failure to keep the label clean and readable may result in liability for violation of Federal Vehicle Theft Prevention Standard and subject the vehicle owner to possible suspicion that the part was stolen.

NOTICE: When fasteners are removed, always reinstall them at the same location from which they were removed. If a fastener needs to be replaced, use the correct part number fastener for that application. If the correct part number fastener is not available, a fastener of equal size and strength (or stronger) may be used. Fasteners that are not reused, and those requiring thread-locking compound, will be called out. The correct torque values must be used when installing fasteners that require them. If the above procedures are not followed, parts or system damage could result.

CONTENTS

General Description 10-5-1
Lubrication 10-5-1
Fasteners 10-5-1
Anticorrosion Material 10-5-1
On-Vehicle Service 10-5-2
Front End Panels 10-5-2
Front Upper Panel 10-5-2
Grille 10-5-3
Grille Emblem 10-5-3
Grille Nets 10-5-4
Battery Carrier 10-5-4
Steering Linkage Skid Plate 10-5-4
Fender Assembly 10-5-4
Wheelhousing 10-5-6
Hood Assembly 10-5-6
Hood Hinge 10-5-7
Hood Latch 10-5-7
Hood Latch Release Cable 10-5-7
Hood Prop Rod 10-5-8
Hood Rear Weatherstrip 10-5-8
Hood Bumpers 10-5-9
Front End Sealing 10-5-9
Cowl Vent Grilles 10-5-9
Door Jamb Switch 10-5-9
Body Panel Adjustment and Alignment Specifications 10-5-10
Specifications 10-5-10
Fastener Torques 10-5-10
Service Parts Information 10-5-10

GENERAL DESCRIPTION

LUBRICATION

The hood hinges and hood latch assembly require periodic lubrication. Refer to SECTION 0B for specific types of lubricants and lubrication intervals.

FASTENERS

Many aluminum components are used on present models. Aluminum in contact with steel may corrode rapidly if not protected by special fasteners or isolators. There are three special fasteners which meet GM specifications. They are GM 6111-M (gray), GM 6047 (black) or GM 6147-M (black). These special fasteners differ in color from the standard metric fasteners, which are medium blue, in order to make them easily identifiable.

NOTICE: When replacing fasteners, avoid substituting otherwise similar fasteners in locations which require the use of GM 6111-M, GM 6047, or GM 6147-M type special fasteners for aluminum components. Failure to follow this precaution may result in premature corrosion of the sheet metal.

ANTICORROSION MATERIAL

Anticorrosion materials have been applied to the interior surfaces of most metal panels to provide rust resistance. When servicing these panels, areas on which this material has been disturbed should be properly recoated with service type anticorrosion. Refer to SECTION 10-1 for anticorrosion application procedures.

ON-VEHICLE SERVICE

FRONT END PANELS

Front Upper Panel

Figures 1 through 4

Remove or Disconnect

- Raise and suitably support hood.
- Rotate prop rod and remove from vehicle.

1. One grille retaining screw accessible through each wheelwell (Figure 1).

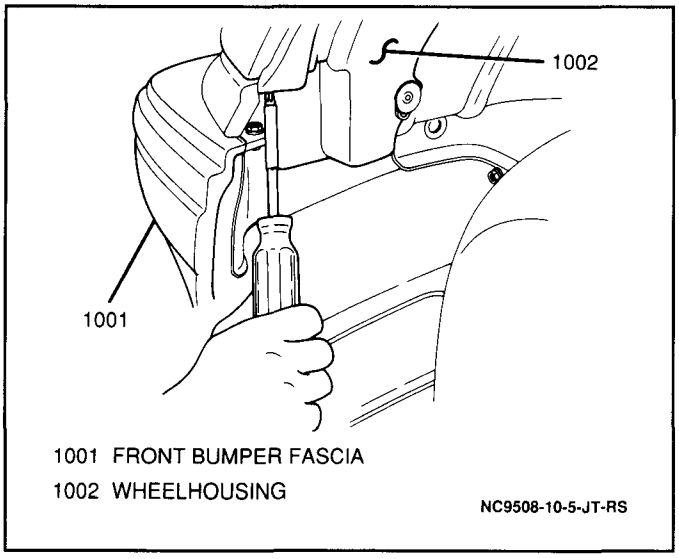

Figure 1 Removing Grille Retaining Screw From Wheelwell

2. One screw from top center of the grille.
3. Two plastic retaining clips and grille from vehicle (Figure 2).

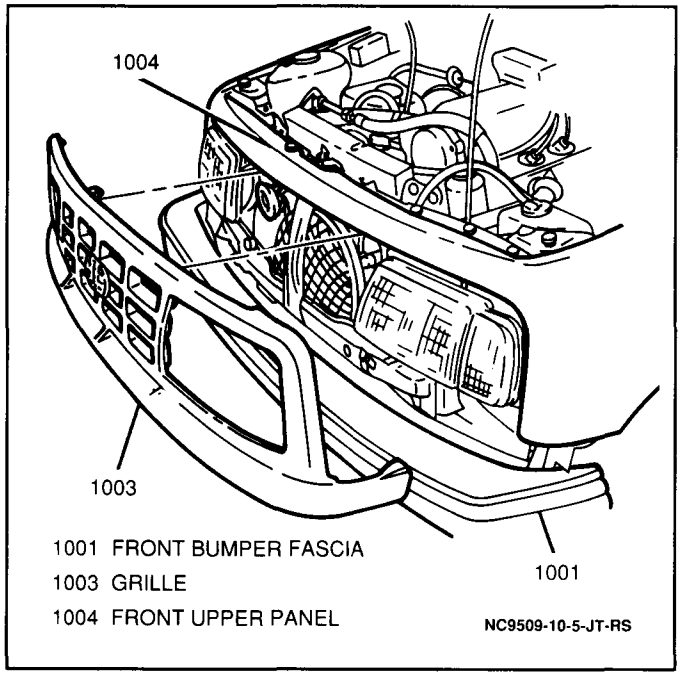

Figure 2 Grille

4. Two bolts and hood latch from body (Figure 3).

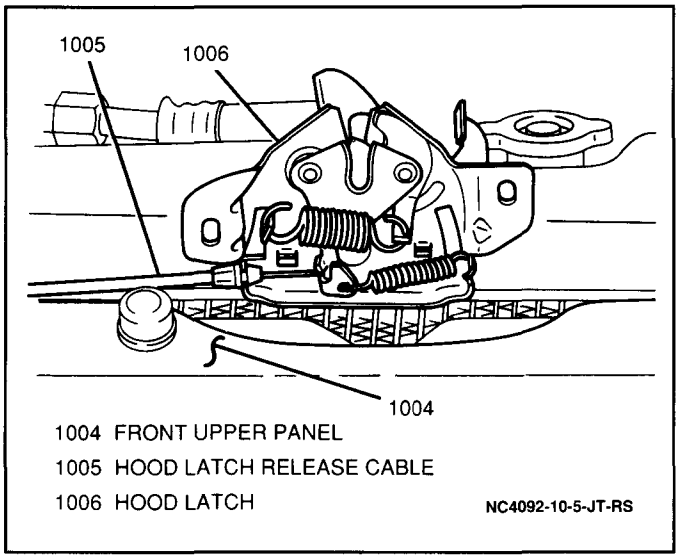

Figure 3 Hood Latch

5. Horn electrical connectors (Figure 4).

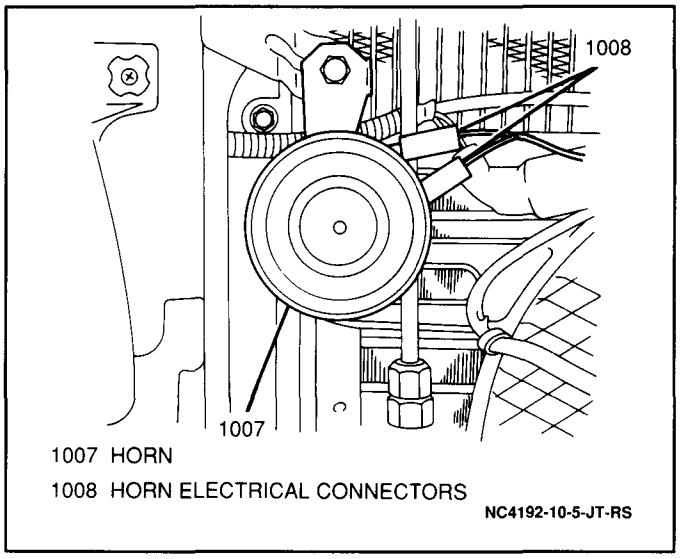

Figure 4 Horn Location

6. One mounting bolt and horn from vehicle (Figure 4).
7. Six bolts along top of front upper panel.
8. Six bolts from front of front upper panel and remove upper panel from vehicle.

Install or Connect

1. Front upper panel to vehicle; secure with six bolts along top of panel and six bolts along front of panel.

   Tighten

   - Front upper panel bolts to 20 N·m (15 lb.ft.).

2. Horn to vehicle; secure with one mounting bolt (Figure 4).

Tighten

- Horn mounting bolt to 10 N·m (89 lb.in.).

3. Horn electrical connectors (Figure 4).
4. Hood latch to body; secure with two bolts (Figure 3).

Tighten

- Hood latch retaining bolts to 15 N·m (11 lb.ft.).

5. Grille to vehicle; secure with two plastic retaining clips (Figure 2).
6. One screw to the top center of the grille.
7. One grille retaining screw inside each wheelwell (Figure 1).
8. Prop rod to vehicle.

- Lower hood.

Grille

Figures 1 and 2

Remove or Disconnect

1. One grille retaining screw accessible through each wheelwell (Figure 1).
2. One screw from top center of the grille.
3. Two plastic retaining clips and grille from vehicle (Figure 2).

Install or Connect

1. Grille to vehicle; secure with two plastic retaining clips (Figure 2).
2. One screw to the top center of the grille.
3. One grille retaining screw inside each wheelwell (Figure 1).

Grille Emblem

Figures 1, 2 and 5

Remove or Disconnect

1. One grille retaining screw accessible through each wheelwell (Figure 1).
2. One screw from top center of the grille.
3. Two plastic retaining clips and grille from vehicle (Figure 2).
4. Two retainers and grille emblem from grille (Figure 5).

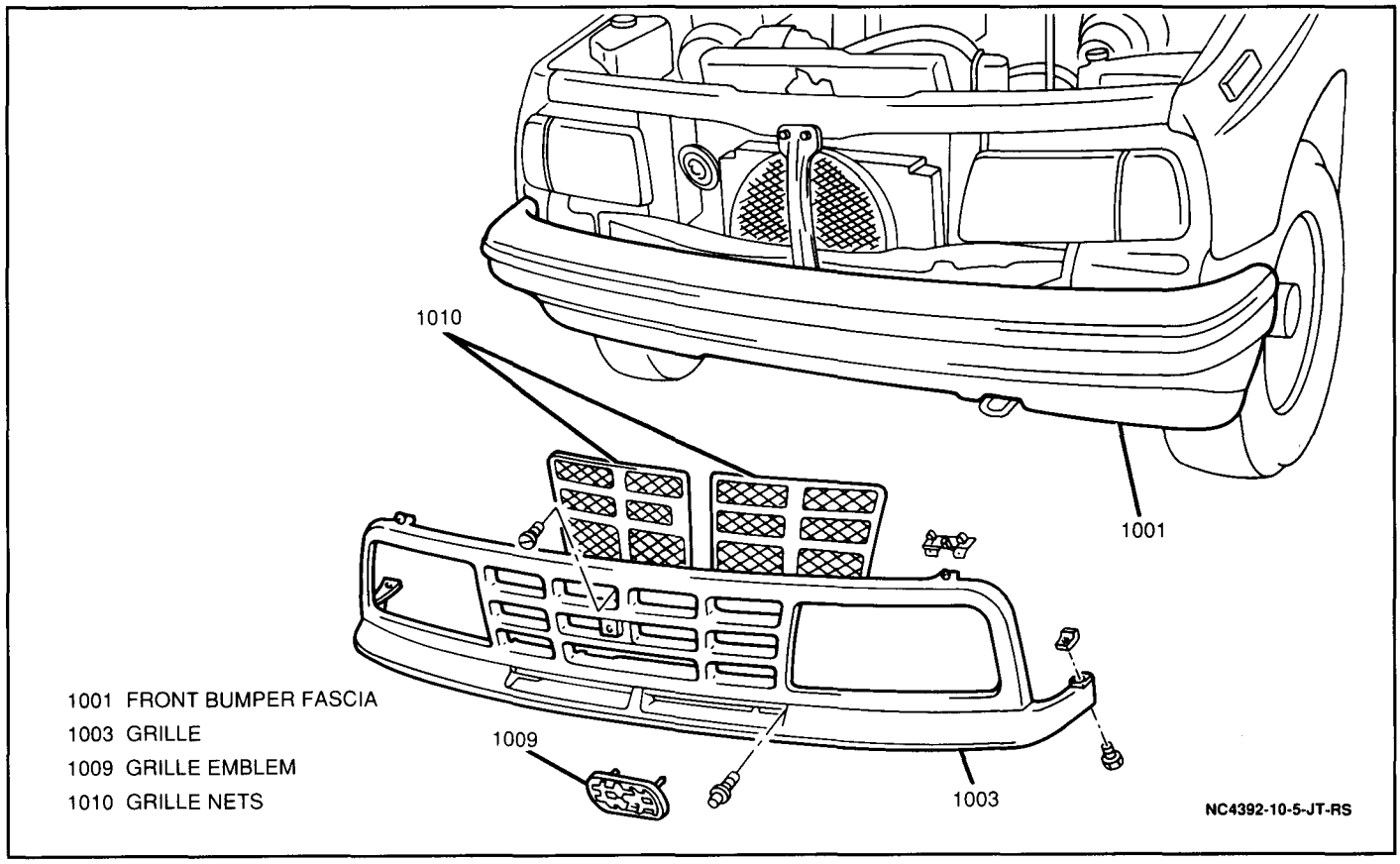

Figure 5 Grille Components

Install or Connect

1. Grille emblem to grille; secure with two retainers (Figure 5).
2. Grille to vehicle; secure with two plastic retaining clips (Figure 2).
3. One screw to the top center of the grille.
4. One grille retaining screw inside each wheelwell (Figure 1).

Grille Nets

Figures 1, 2 and 5

Remove or Disconnect

1. One grille retaining screw accessible through each wheelwell (Figure 1).
2. One screw from top center of the grille.
3. Two plastic retaining clips and grille from vehicle (Figure 2).
4. Two retainers and grille emblem from grille (Figure 5).

- Unclip grille net from grille (Figure 5).

Install or Connect

- Grille net to grille; clip into place (Figure 5).

1. Grille emblem to grille; secure with two retainers (Figure 5).
2. Grille to vehicle; secure with two plastic retaining clips (Figure 2).
3. One screw to the top center of the grille.
4. One grille retaining screw inside each wheelwell (Figure 1).

Battery Carrier

Remove or Disconnect

1. Negative (-) battery cable.
2. Positive (+) battery cable.
3. Two retaining nuts and battery hold down bracket from vehicle.
4. Battery from vehicle.
5. Battery carrier from vehicle.

Install or Connect

1. Battery carrier to vehicle.
2. Battery to vehicle.
3. Battery hold down bracket to vehicle; secure with two retaining nuts.

   Tighten

   - Battery hold down bracket retaining nuts to 8 N·m (71 lb.in.).

4. Negative (-) battery cable.

   Tighten

   - Negative (-) battery cable-to-negative (-) battery terminal retainer to 15 N·m (11 lb.ft.).

5. Positive (+) battery cable.

   Tighten

   - Positive (+) battery cable-to-positive (+) battery terminal retainer to 15 N·m (11 lb.ft.).

Steering Linkage Skid Plate

Figure 6

Remove or Disconnect

- Raise and suitably support vehicle. Refer to SECTION 0A.
- Four mounting bolts and steering linkage skid plate from vehicle (Figure 6).

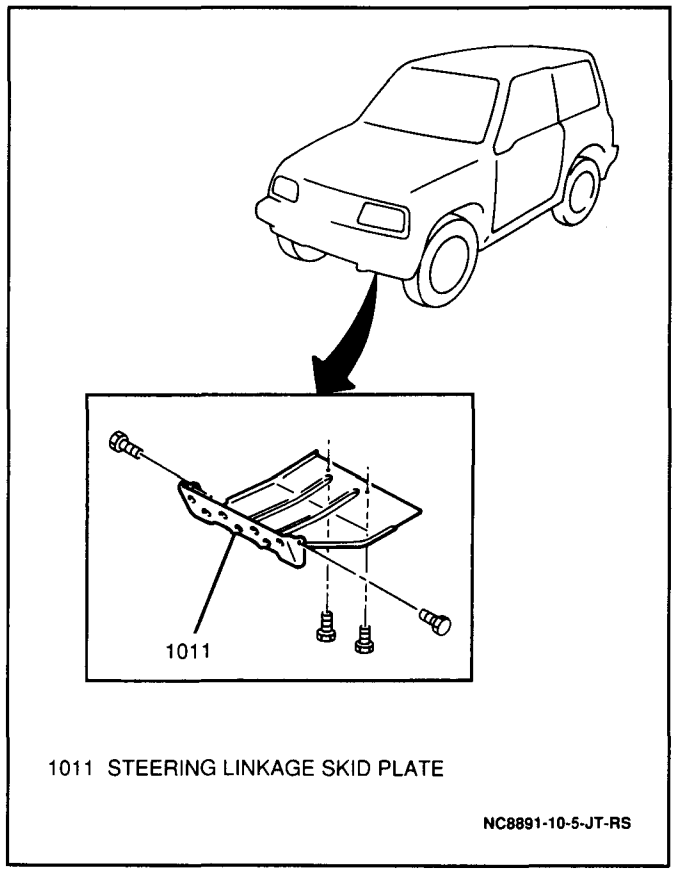

Figure 6 Steering Linkage Skid Plate

Install or Connect

- Steering linkage skid plate to vehicle; secure with four mounting bolts (Figure 6).

  Tighten

  - Steering linkage skid plate mounting bolts to 54 N·m (40 lb.ft.).

- Lower vehicle.

FENDER ASSEMBLY

Figures 7 through 10

Remove or Disconnect

1. Negative (-) battery cable.

- Unclip front side marker lamp from front fender (Figure 7).

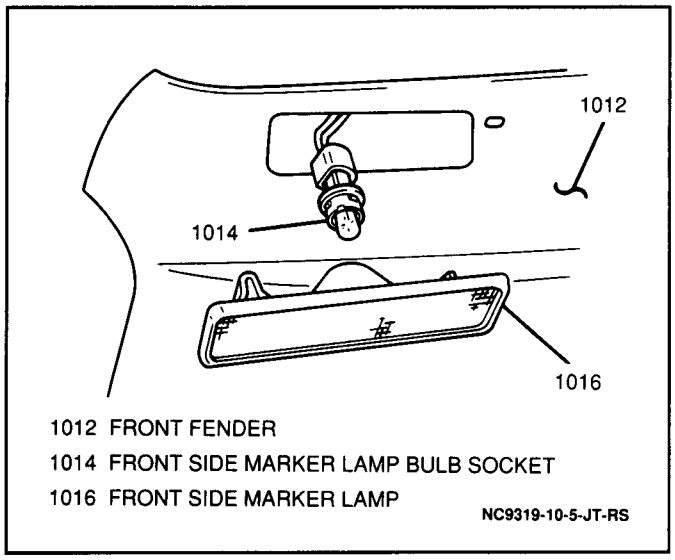

Figure 7 Front Side Marker Lamp

2. Front side marker lamp bulb socket from lamp and remove lamp from vehicle (Figure 7).
3. Nine screws and wheelhousing from vehicle (Figure 8).
4. One screw, one nut and remove rocker panel front trim cover from vehicle to gain access to two front fender lower mounting bolts (Figure 9).

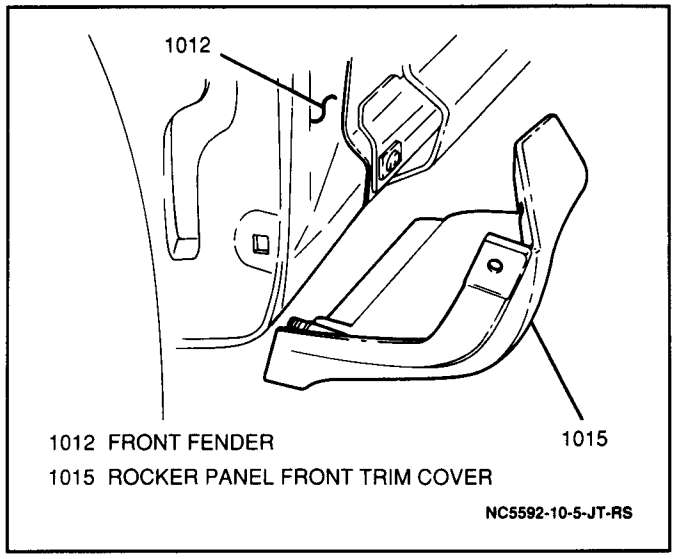

Figure 9 Rocker Panel Front Trim Cover

5. Two front fender lower mounting bolts.
- Open front door.

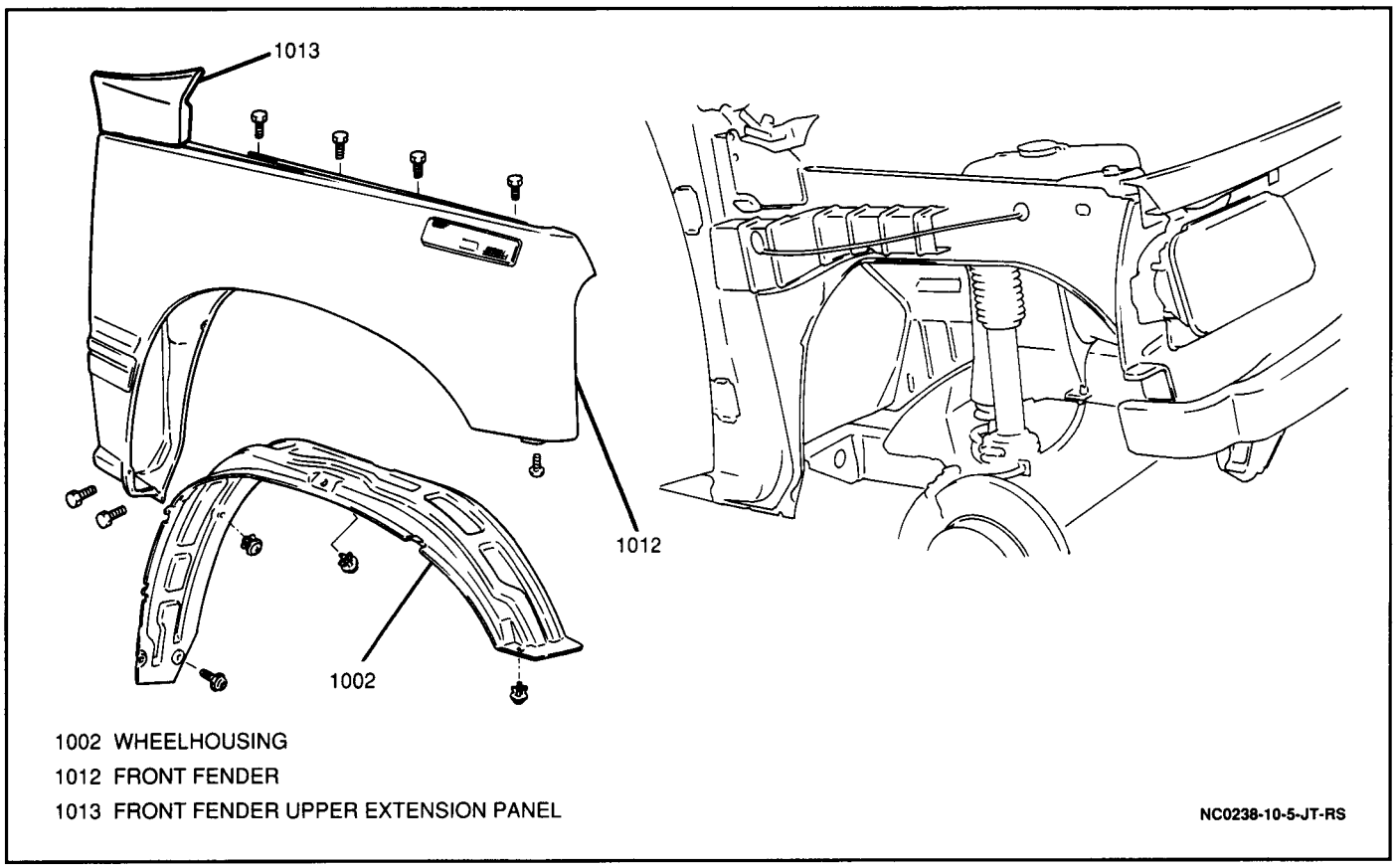

Figure 8 Front Fender and Wheelhousing

6. Two bolts from front fender upper extension panel (Figure 8).
7. One screw from front fender (Figure 10).

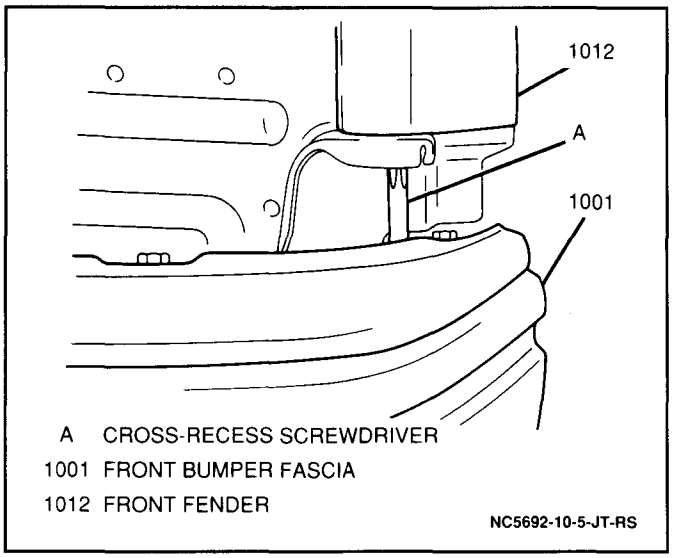

Figure 10 Removing Front Fender Attaching Screw

8. Four bolts along top of front fender and fender from vehicle.

Install or Connect

1. Front fender to vehicle; secure with four bolts along top of fender.

Tighten

- Front fender bolts to 20 N·m (15 lb.ft.).

2. One screw to front fender (Figure 10).
3. Two bolts to front fender upper extension panel (Figure 8).

Tighten

- Front fender bolts to 20 N·m (15 lb.ft.).

- Close front door.

4. Two front fender lower mounting bolts.

Tighten

- Front fender bolts to 20 N·m (15 lb.ft.).

- Check front fender for proper clearance, flushness and alignment. Refer to SECTION 10-1 for front fender adjustment and alignment specifications.

5. Rocker panel front trim cover to vehicle; secure with one nut and one screw (Figure 9).

Tighten

- Rocker panel front trim cover nut to 15 N·m (11 lb.ft.).

6. Wheelhousing to vehicle; secure with nine screws (Figure 8).
7. Front side marker lamp bulb socket to lamp (Figure 7).
8. Front side marker lamp to front fender; clip into place (Figure 7).
9. Negative (-) battery cable.

Tighten

- Negative (-) battery cable-to-negative (-) battery terminal retainer to 15 N·m (11 lb.ft.).

Wheelhousing

Figure 8

Remove or Disconnect

- Nine screws and wheelhousing from vehicle (Figure 8).

Install or Connect

- Wheelhousing to vehicle; secure with nine screws (Figure 8).

HOOD ASSEMBLY

Figures 11 and 12

Remove or Disconnect

- Raise and suitably support hood.
- Install protective covers over fenders to prevent paint damage.
- Mark the position of the hinges to the hood for ease of assembly.
- Two bolts from each hood hinge and hood from vehicle (Figure 11).

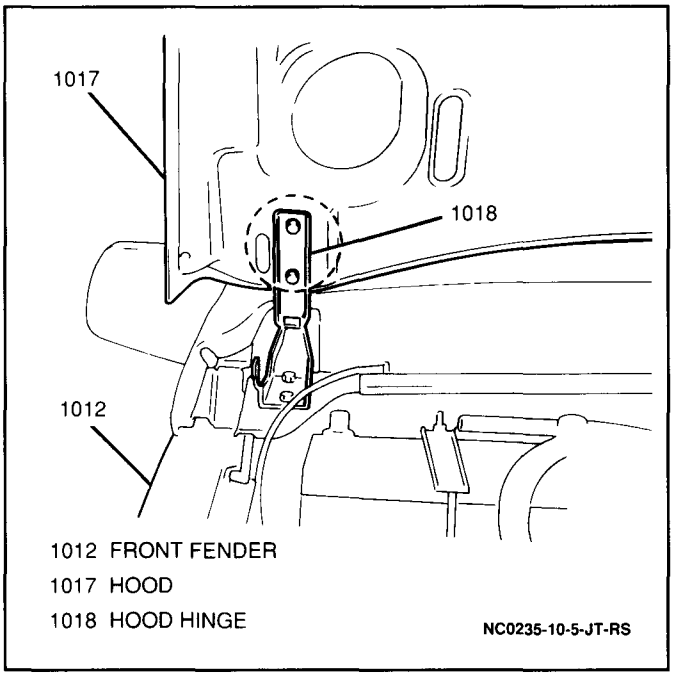

Figure 11 Hood Hinge

NOTICE: When replacing the hood, be sure to apply anticorrosive treatment to the mating surfaces between the hood and the hinges. Refer to SECTION 10-1.

Install or Connect

- Align the hood with the position marks.
- Hood to hinges; secure to each hinge with two retaining bolts but do not tighten fully (Figure 11).

Adjust

- Hood-to-cowl vent grille clearance, hood-to-headlamp clearance and hood-to-front fender clearance. Refer to SECTION 10-1 for hood alignment and clearance specifications.
- Turn the rubber bumpers for vertical alignment (Figure 12). Refer to SECTION 10-1 for hood flushness specifications.

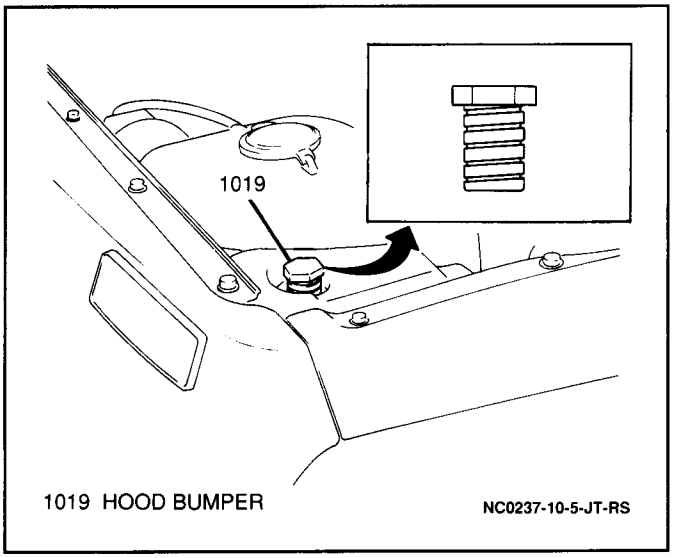

Figure 12 Hood Bumper

Tighten

- Hood retaining bolts to 27 N·m (20 lb.ft.).

- Remove protective covers from fenders.
- Lower hood.

Hood Hinge

Figures 11 and 12

Remove or Disconnect

- Raise and suitably support hood.
- Install protective covers over fenders to prevent paint damage.
- Mark the position of the hinges to the hood for ease of assembly.

1. Two bolts from each hood hinge and hood from vehicle (Figure 11).
2. Two bolts from hood hinge and hinge from vehicle (Figure 11).

NOTICE: When replacing the hood, be sure to apply anticorrosive treatment to the mating surfaces between the hood and the hinges. Refer to SECTION 10-1.

Install or Connect

1. Hood hinge to vehicle; secure with two bolts (Figure 11).

Tighten

- Hood hinge-to-vehicle bolts to 27 N·m (20 lb.ft.).

- Align the hood with the position marks.

2. Hood to hinges; secure to each hinge with two retaining bolts but do not tighten fully (Figure 11).

Adjust

- Hood-to-cowl vent grille clearance, hood-to-headlamp clearance and hood-to-front fender clearance. Refer to SECTION 10-1 for hood alignment and clearance specifications.
- Turn the rubber bumpers for vertical alignment (Figure 12). Refer to SECTION 10-1 for hood flushness specifications.

Tighten

- Hood retaining bolts to 27 N·m (20 lb.ft.).

Hood Latch

Figure 3

Remove or Disconnect

- Raise hood.

1. Two retaining bolts and hood latch from front upper panel (Figure 3).
2. Hood latch release cable from hood latch (Figure 3).

Install or Connect

1. Hood latch release cable to hood latch (Figure 3).
2. Hood latch to vehicle; secure with two retaining bolts but do not tighten fully (Figure 3).

Adjust

- Hood latch so that the striker shaft lines up with the center groove of the hood latch.
- Hood latch so that the hood is flush with the front fender. Refer to SECTION 10-1 for hood flushness specifications.

Tighten

- Hood latch retaining bolts to 15 N·m (11 lb.ft.).

- Lower hood.

Hood Latch Release Cable

Figures 3 and 13

Remove or Disconnect

- Raise hood.

1. Two retaining bolts and hood latch from vehicle (Figure 3).
2. Hood latch release cable from hood latch (Figure 3).

- Attach a piece of mechanic's wire to the hood latch release cable to aid in the removal and installation of the release cable.
- Unclip hood latch release cable from hold down clips.

3. One screw and glove box from instrument panel (Figure 13).

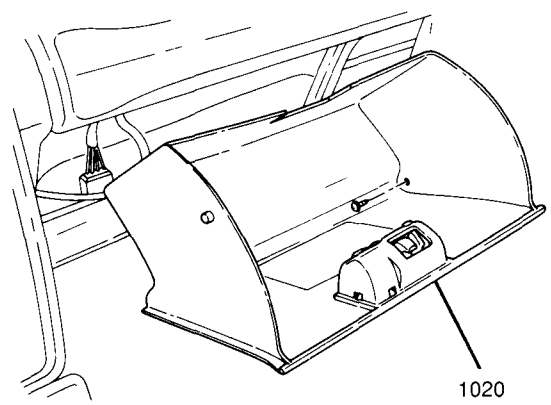

1020 GLOVE BOX NC1803-10-5-JT-RS

Figure 13 Glove Box

4. Two screws and hood latch release lever from support member.

- Pull hood latch release cable through body and remove from vehicle (pull cable from inside passenger compartment).

5. Mechanic's wire from release cable.

Important

- Mechanic's wire should remain strung through the body to ease installation of hood latch release cable.

Install or Connect

- Attach hood latch release cable to the mechanic's wire from inside passenger compartment.

1. Hood latch release lever to support member; secure with two screws.

- Guide hood latch release cable through body with mechanic's wire.
- Remove mechanic's wire from hood latch release cable.

2. Glove box to instrument panel; secure with one screw (Figure 13).

- Hood latch release cable to hold down clips; clip into place.

3. Hood latch release cable to hood latch (Figure 3).
4. Hood latch to vehicle; secure with two retaining bolts but do not tighten fully (Figure 3).

Adjust

- Hood latch so that the striker shaft lines up with the center groove of the hood latch.
- Hood latch so that the hood is flush with the front fender. Refer to SECTION 10-1 for hood flushness specifications.

Tighten

- Hood latch retaining bolts to 15 N·m (11 lb.ft.).

- Lower hood.

Hood Prop Rod

Remove or Disconnect

- Raise and suitably support hood.
- Rotate prop rod and remove from vehicle.

Install or Connect

- Prop rod to vehicle.
- Lower hood.

Hood Rear Weatherstrip

Figure 14

Remove or Disconnect

- Raise hood.
- Pull hood rear weatherstrip from cowl flange (Figure 14).

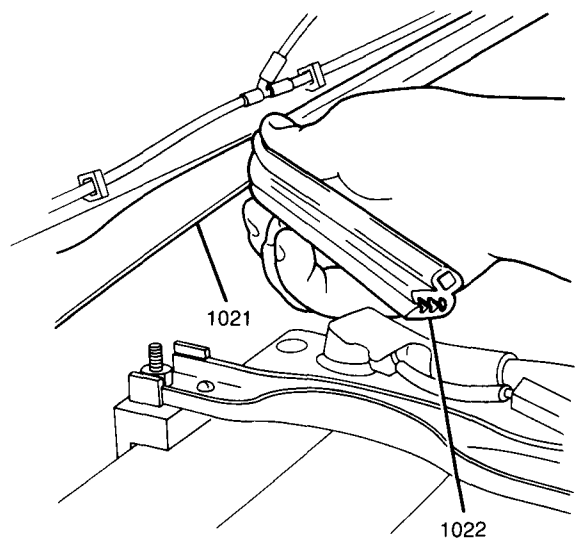

1021 COWL FLANGE
1022 HOOD REAR WEATHERSTRIP NC6592-10-5-JT-RS

Figure 14 Hood Rear Weatherstrip

Install or Connect

- Hood rear weatherstrip to cowl flange, press into place (Figure 14).
- Lower hood.

Hood Bumpers

Figure 12

Remove or Disconnect

- Raise hood.
- Hood bumper from vehicle by unscrewing counter-clockwise (Figure 12).

Install or Connect

- Hood bumper to vehicle; secure by screwing clockwise into vehicle (Figure 12).

Adjust

- Hood bumper so that the hood is flush with the front fender. Refer to SECTION 10-1 for hood flushness specifications.

- Lower hood.

FRONT END SEALING

All potential waterleak locations are sealed in production with high quality durable sealers. Should it be necessary to reseal specific areas, use a high quality sealer of medium-bodied consistency which will retain its flexible characteristics after curing and can be painted if necessary. Refer to SECTION 10-1 for painting service procedures.

COWL VENT GRILLES

Figure 15

Remove or Disconnect

1. One nut from each front wiper arm and wiper arms from vehicle.
- Unclip washer hoses and remove from cowl vent grilles.
2. Nine plastic retaining clips and cowl vent grilles from vehicle (Figure 15).

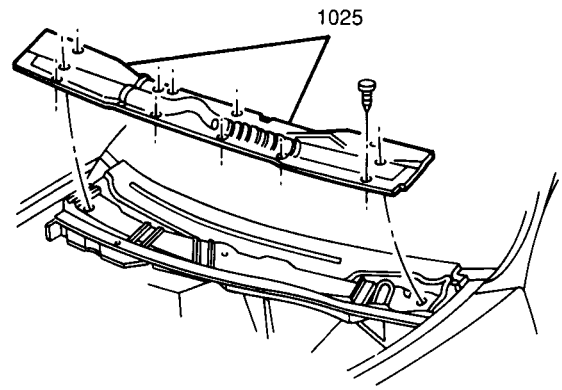

1025 COWL VENT GRILLES

NC2002-10-5-JT-RS

Figure 15 Cowl Vent Grilles

Install or Connect

1. Cowl vent grilles to vehicle; secure with nine plastic retaining clips (Figure 15).
2. Washer hoses to cowl vent grilles; clip into place.
3. Front wiper arms to vehicle; secure each with one nut.

Tighten

- Front wiper arm retaining nuts to 20 N·m (15 lb.ft.).

DOOR JAMB SWITCH

Figure 16

Remove or Disconnect

1. Negative (-) battery cable.
2. One screw from front seat belt trim bezel.
- Pull rear quarter interior trim panel from vehicle, disengaging plastic clips.
3. Four screws and pull rear speaker from body.
4. Rear speaker electrical connector and remove rear speaker from vehicle.
5. Door jamb switch electrical connector.
- Pull door jamb switch rubber cap off switch.
- With a flat-bladed tool, gently pry the door jamb switch away from the body and remove switch from vehicle (Figure 16).

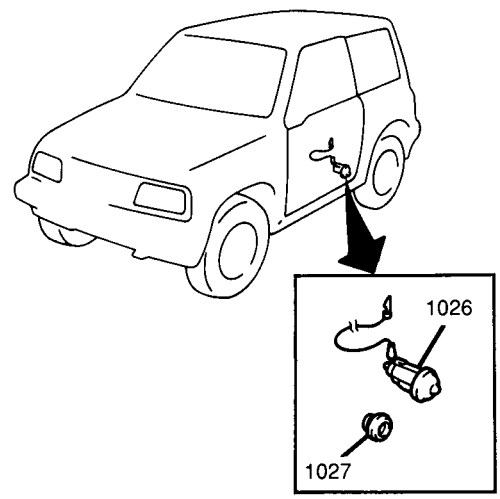

1026 DOOR JAMB SWITCH

1027 DOOR JAMB SWITCH RUBBER CAP

NC8080-10-5-JT-RS

Figure 16 Door Jamb Switch

Install or Connect

1. Door jamb switch to vehicle, press into place (Figure 16).
- Fit door jamb switch rubber cap onto switch.
2. Door jamb switch electrical connector.
3. Rear speaker electrical connector.
4. Rear speaker to body; secure with four screws.
5. Rear quarter interior trim panel to vehicle; press into place, engaging plastic clips (Figure 4).
6. Front seat belt trim bezel to vehicle; secure with one screw.
7. Negative (-) battery cable.

Tighten

- Negative (-) battery cable-to-negative (-) battery terminal retainer to 15 N·m (11 lb.ft.).

BODY PANEL ADJUSTMENT AND ALIGNMENT SPECIFICATIONS

Refer to SECTION 10-1 for body panel alignment specifications.

SPECIFICATIONS

FASTENER TORQUES

Battery Hold Down Bracket Retaining Nuts	8 N·m (71 lb.in.)
Hood Hinge-to-Vehicle Bolts	27 N·m (20 lb.ft.)
Hood Latch Retaining Bolts	15 N·m (11 lb.ft.)
Hood Retaining Bolts	27 N·m (20 lb.ft.)
Horn Mounting Bolt	10 N·m (89 lb.in.)
Front Fender Bolts	20 N·m (15 lb.ft.)
Front Upper Panel Bolts	20 N·m (15 lb.ft.)
Front Wiper Arm Retaining Nuts	20 N·m (15 lb.ft.)
Negative (-) Battery Cable-to-Negative (-) Battery Terminal Retainer	15 N·m (11 lb.ft.)
Positive (+) Battery Cable-to-Positive (+) Battery Terminal Retainer	15 N·m (11 lb.ft.)
Rocker Panel Front Trim Cover Nut	15 N·m (11 lb.ft.)
Steering Linkage Skid Plate Mounting Bolts	54 N·m (40 lb.ft.)

SERVICE PARTS INFORMATION

Component Name Used in Section 10-3	Reference Name in Service Parts Catalog	Group Number
Cowl Vent Grille	Panel, Cowl Outer	16.125
Door Jamb Switch	Switch Asm, Electric Control Door	16.494
Door Jamb Switch Rubber Cap.	Cap, Electric Control Door Switch Hole	16.494
Front Upper Panel	Panel, Front Panel Upper	1.271
Front Fender	Panel Asm, Front Fender	8.130
Grille	Grille, Front Radiator	1.266
Grille Emblem	Emblem, Front Grille	1.303
Grille Net	Net, Front Grille	1.266
Hood	Panel Asm, Front Hood	8.000
Hood Bumper	Bumper, Front Hood	8.024
Hood Hinge	Hinge, Front Hood	8.015
Hood Latch	Latch, Hood Lock	8.080
Hood Latch Release Cable	Cable, Hood Latch Release	8.075
Hood Prop Rod	Stay, Front Hood	8.015
Hood Rear Weatherstrip	Weatherstrip, Cowl Top Front	16.125
Steering Linkage Skid Plate.	Shield Asm, Steering Linkage	6.509
Wheelhousing	Lining, Front Fender	8.153

SECTION 10-6

DOORS

NOTICE: The theft deterrent label found on some major sheet metal, engines, and transmissions must be masked prior to painting, rustproofing, undercoating, etc. The mask must be removed following the above operations. Failure to keep the label clean and readable may result in liability for violation of Federal Vehicle Theft Prevention Standard and subject the vehicle owner to possible suspicion that the part was stolen.

NOTICE: When fasteners are removed, always reinstall them at the same location from which they were removed. If a fastener needs to be replaced, use the correct part number fastener for that application. If the correct part number fastener is not available, a fastener of equal size and strength (or stronger) may be used. Fasteners that are not reused, and those requiring thread-locking compound, will be called out. The correct torque values must be used when installing fasteners that require them. If the above procedures are not followed, parts or system damage could result.

CONTENTS

General Description 10-6-1
Theft Deterrent Labels 10-6-1
Front Door Hardware Lubrication 10-6-1
On-Vehicle Service 10-6-3
Front Door Trim 10-6-3
Interior Trim 10-6-3
Exterior Trim 10-6-3
Front Door Hardware and Window 10-6-3
Weatherstrips 10-6-3
Inner Sealing Strip 10-6-3
Outer Sealing Strip 10-6-3
Water Deflector 10-6-4
Mirrors 10-6-4
Handles 10-6-6
Door Lock Striker 10-6-6
Door Lock 10-6-7
Lock Cylinder 10-6-8
Hinges 10-6-8
Windows 10-6-9
Regulators 10-6-10
Specifications 10-6-11
Fastener Torques 10-6-11
Service Parts Information 10-6-11

GENERAL DESCRIPTION

THEFT DETERRENT LABELS

Federal law requires General Motors to label major parts of the vehicle with a theft deterrent label. The theft deterrent label is permanently affixed to the interior surface of the right and left front doors and contains the complete vehicle identification number (VIN).

Important

- THEFT DETERRENT LABELS ARE NOT TO BE DEFACED, REMOVED OR COVERED OVER. These labels must be shielded from paint, rustproofing and undercoating (dealer preparation included).

For further information on theft deterrent labels, refer to SECTION 0A.

FRONT DOOR HARDWARE LUBRICATION

The front door locks, lock cylinders and hinges require periodic lubrication. Refer to SECTION 0B for lubrication intervals and types of lubricants.

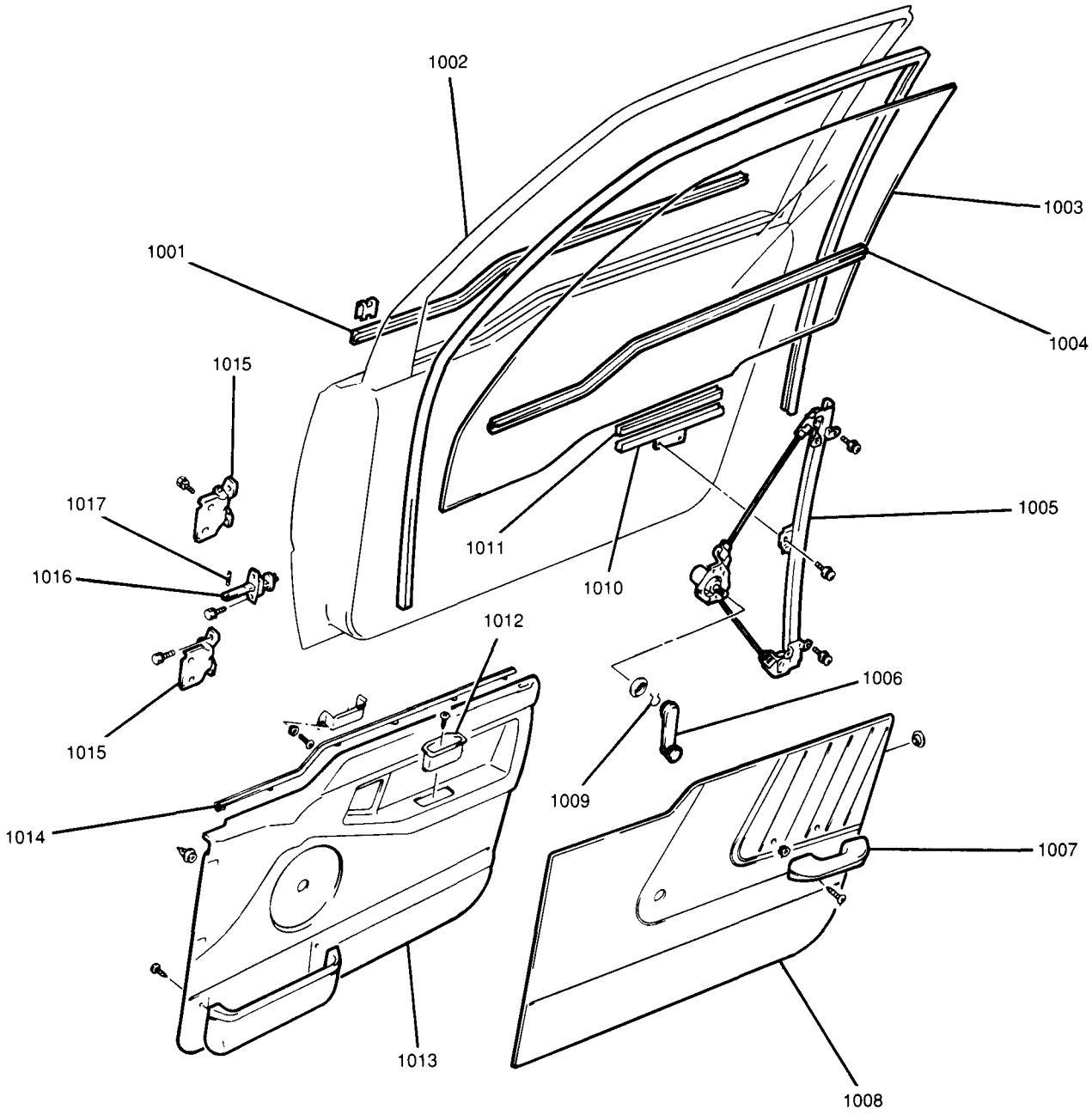

1001 OUTER SEALING STRIP
1002 FRONT DOOR
1003 FRONT DOOR WINDOW
1004 INNER SEALING STRIP
1005 REGULATOR
1006 REGULATOR HANDLE
1007 FRONT DOOR ARMREST (BASE MODELS)
1008 FRONT DOOR TRIM (BASE MODELS)
1009 REGULATOR HANDLE RETAINING CLIP
1010 LOWER SASH CHANNEL
1011 LOWER SASH CHANNEL RUBBER
1012 PULL HANDLE CASE
1013 FRONT DOOR TRIM (LSi MODELS)
1014 FRONT DOOR TRIM INNER WEATHERSTRIP
1015 FRONT DOOR HINGE
1016 DOOR OPEN STOP
1017 DOOR OPEN STOP PIN

NC6292-10-6-JT-RS

Figure 1 Front Door Assembly

ON-VEHICLE SERVICE

FRONT DOOR TRIM

Interior Trim

Figures 1 and 2

Remove or Disconnect

1. One screw and front door inside handle trim bezel from door.
2. Two screws and armrest from door (Base models).
3. One screw from pull handle case (LSi models).
4. Regulator handle, use a cloth to pull off snap ring (Figure 2).

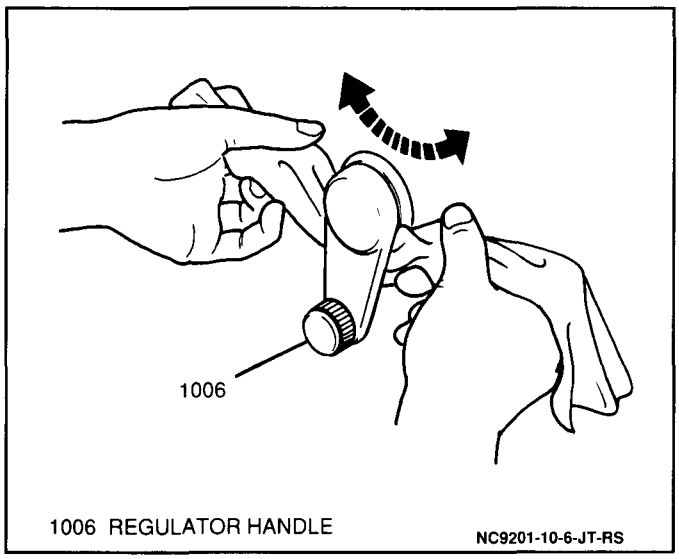

Figure 2 Removing Regulator Handle

- Gently pry door trim away from door, disengaging retaining clips.
- Rotate interior trim 90 degrees counterclockwise and remove from vehicle.

Install or Connect

- Position interior trim to door; press retaining clips into place.

1. Regulator handle to door; secure with snap ring. Make sure that the regulator handle is at a 45 degree angle when the window is fully closed.
2. One screw to pull handle case (LSi models).
3. Armrest to door; secure with two screws (Base models).
4. Front door inside handle trim bezel to door; secure with one screw.

Exterior Trim

All exterior trim and moldings are retained with adhesive. Refer to SECTION 10-1 for removal and installation procedures for all exterior door trim and moldings.

FRONT DOOR HARDWARE AND WINDOW

Weatherstrips

Remove or Disconnect

- Pull weatherstrip from door opening flange.

Install or Connect

- Weatherstrip to door opening flange; press into place.

Inner Sealing Strip

Base Models

Figure 1

Remove or Disconnect

- Lower front door window completely.
- Using a flat-bladed tool wrapped in tape, gently pry inner sealing strip from door.

Install or Connect

- Inner sealing strip to door; press into place.

LSi Models

Figure 1

The inner sealing strip for the LSi model is incorporated into the interior trim panel and therefore, not serviced separately.

Outer Sealing Strip

Figure 1

Remove or Disconnect

- Lower front door window completely.
- Interior trim from door. Refer to "Interior Trim" earlier in this section.
- Using a flat-bladed tool wrapped in tape, gently pry outer sealing strip from door.

Install or Connect

1. Outer sealing strip to door; press into place.
2. Interior trim to door. Refer to "Interior Trim" earlier in this section.

Water Deflector

Figure 3

Remove or Disconnect

- Interior trim from door. Refer to "Interior Trim" earlier in this section.
- Peel water deflector away from door (Figure 3).

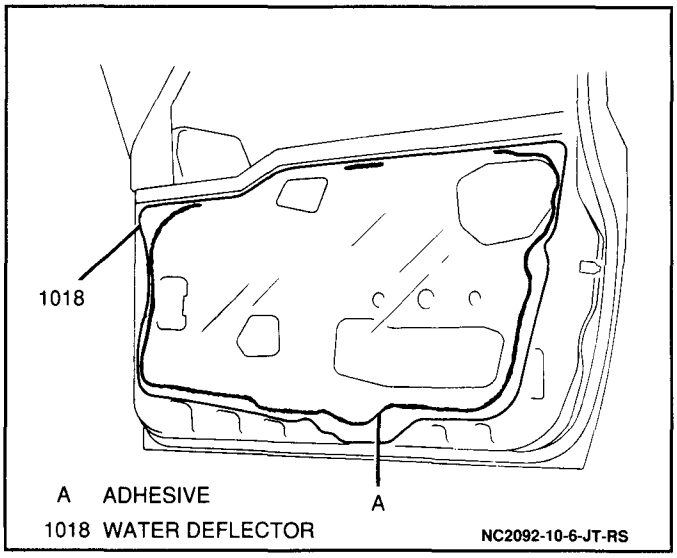

Figure 3 Water Deflector

Inspect

- For tears and holes in water deflector. To repair, apply waterproof tape to both sides of the water deflector.

Install or Connect

- Apply adhesive to back of water deflector.
1. Water deflector to door (Figure 3).
2. Interior trim to door. Refer to "Interior Trim" earlier in this section.

Mirrors

Figure 4

Remove or Disconnect

- Gently pry inner mirror trim from door.
1. Three screws and mirror from door (Figure 4).

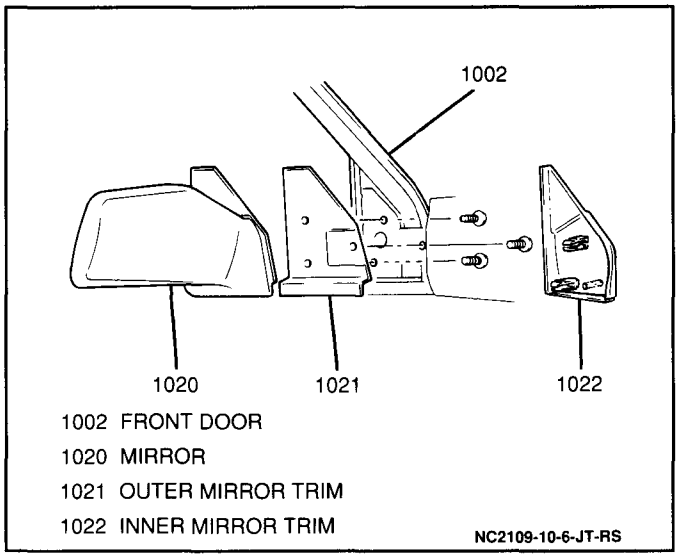

Figure 4 Mirror

2. Outer mirror trim from mirror.
3. Gasket from mirror.

Install or Connect

1. Gasket to mirror.
2. Outer mirror trim to mirror.
3. Mirror to door; secure with three screws (Figure 4).
4. Inner mirror trim to door; snap into place.

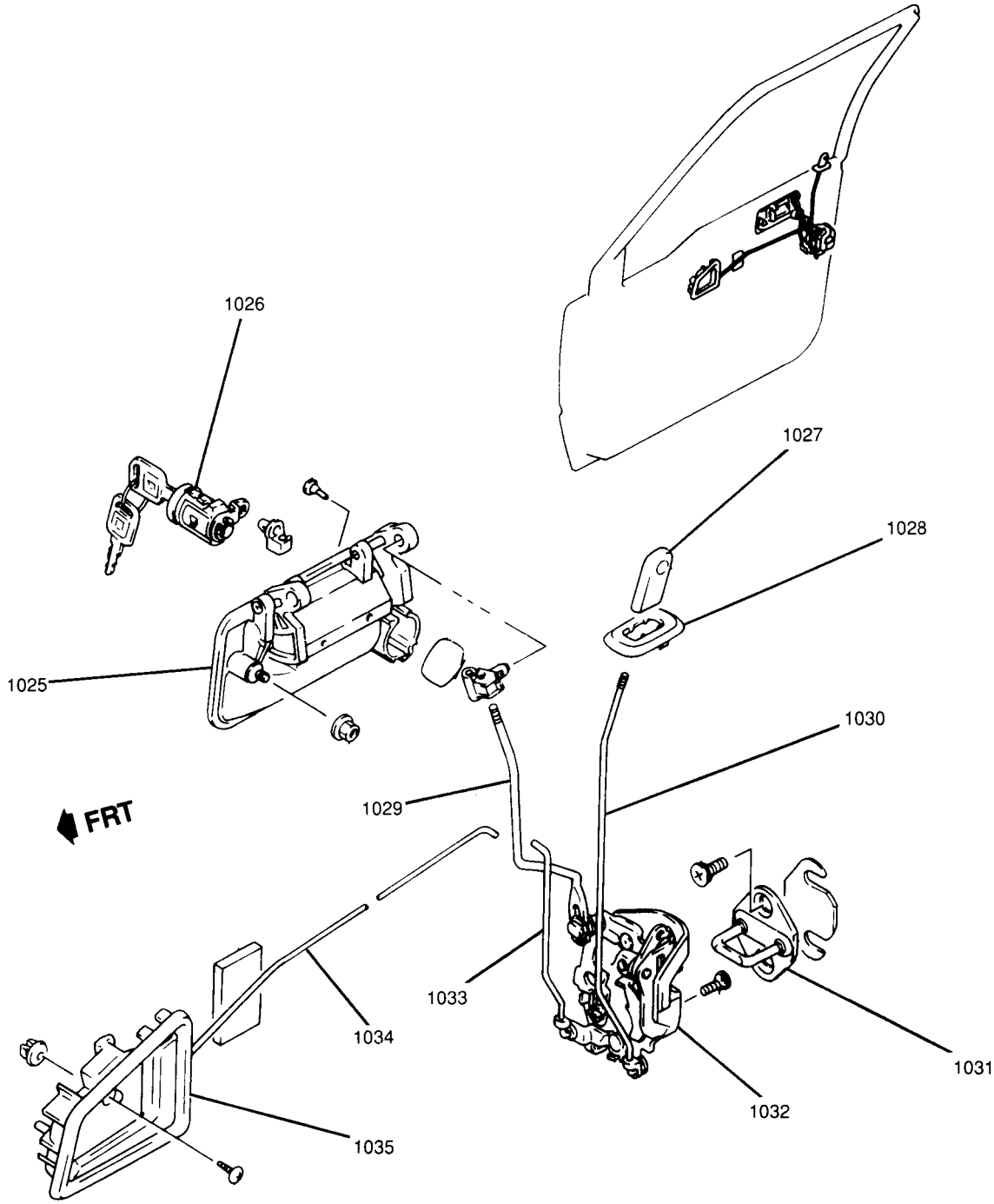

1025 FRONT DOOR OUTSIDE HANDLE
1026 FRONT DOOR LOCK CYLINDER
1027 FRONT DOOR LOCK KNOB
1028 FRONT DOOR LOCK KNOB TRIM BEZEL
1029 FRONT DOOR OUTSIDE HANDLE ROD
1030 FRONT DOOR LOCK KNOB LOCK ROD
1031 FRONT DOOR LOCK STRIKER
1032 FRONT DOOR LOCK
1033 FRONT DOOR LOCK CYLINDER LOCK ROD
1034 FRONT DOOR INSIDE HANDLE ROD
1035 FRONT DOOR INSIDE HANDLE TRIM BEZEL

NC2096-10-6-JT-RS

Figure 5 Front Door Lock Assembly

Handles

Inside

Figures 3 and 5

Remove or Disconnect

1. Interior trim from door. Refer to "Interior Trim" earlier in this section.
- Peel water deflector away from door (Figure 3).
2. Front door inside handle rod from handle and remove handle from door.

Install or Connect

1. Front door inside handle rod to handle and handle to door.

Inspect

- For tears and holes in water deflector. To repair, apply waterproof tape to both sides of the water deflector.

- Apply adhesive to back of water deflector.
2. Water deflector to door (Figure 3).
3. Interior trim to door. Refer to "Interior Trim" earlier in this section.

Outside

Figures 3 and 5

Remove or Disconnect

1. Interior trim from door. Refer to "Interior Trim" earlier in this section.
- Peel water deflector away from door (Figure 3).
2. Front door outside handle rod from handle.
3. Two nuts and front door outside handle from door.

Install or Connect

1. Front door outside handle to door; secure with two nuts.

Tighten

- Front door outside handle-to-door nuts to 10 N·m (89 lb.in.).

2. Front door outside handle rod to handle.

Inspect

- For tears and holes in water deflector. To repair, apply waterproof tape to both sides of the water deflector.

- Apply adhesive to back of water deflector.
3. Water deflector to door (Figure 3).
4. Interior trim to door. Refer to "Interior Trim" earlier in this section.

Door Lock Striker

Figures 5 through 8

Remove or Disconnect

- Mark position of front door lock striker on door jamb for ease of installation.
- Two screws and front door lock striker from door jamb.

Install or Connect

- Front door lock striker to door jamb; secure with two screws.

Adjust

- Striker vertical measurement so that the striker shaft aligns with the center of the door lock (Figure 6).

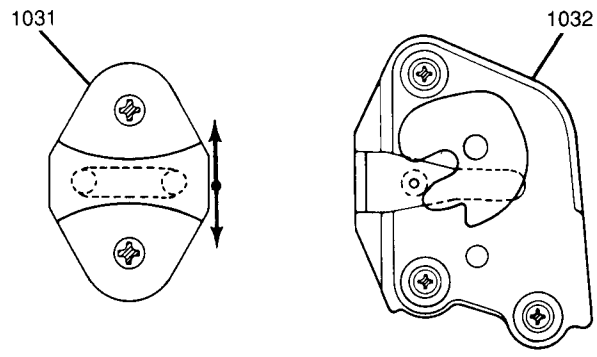

1031 FRONT DOOR LOCK STRIKER
1032 FRONT DOOR LOCK
NC2102-10-6-JT-RS

Figure 6 Aligning Front Door Lock Striker

- Lock striker-to-door distance to 13 to 15 mm (0.51 to 0.59-inch) by installing or removing shims as necessary (Figure 7).

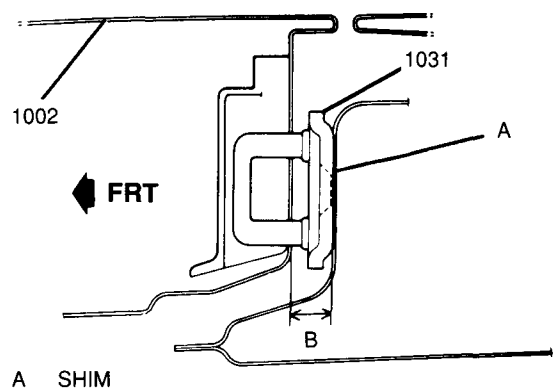

A SHIM
B 13 – 15 mm (0.51 – 0.59")
1002 FRONT DOOR
1031 FRONT DOOR LOCK STRIKER
NC1477-10-6-JT-RS

Figure 7 Adjusting Front Door Lock Striker

- Keeping lock striker level, move striker sideways to adjust door flushness with quarter panel (Figure 8). Refer to SECTION 10-1 for door flushness specifications.

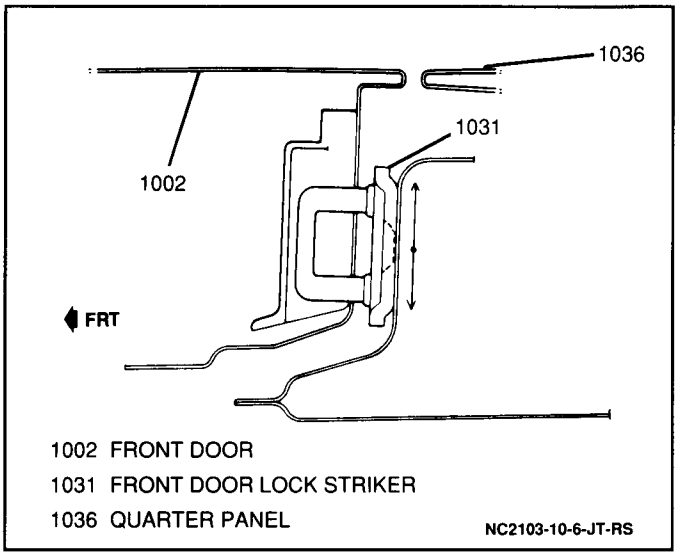

Figure 8 Adjusting Front Door-to-Quarter Panel Flushness

Door Lock

Figures 3, 5 and 9

Remove or Disconnect

1. Interior trim from door. Refer to "Interior Trim" earlier in this section.
- Peel water deflector away from door (Figure 3).
2. Front door outside and inside handle rods from front door lock.
3. Front door lock cylinder lock rod from door lock.
4. Front door lock knob lock rod from door lock.
5. Three screws and door lock from door.

Install or Connect

1. Door lock to door; secure with three screws.
2. Front door lock knob lock rod to door lock.
3. Front door lock cylinder lock rod to door lock.
4. Front door outside and inside handle rods to door lock.

Adjust

- Outside handle rod to door lock linkage distance to 0 to 2 mm (0.0 to 0.08-inch) (Figure 9).

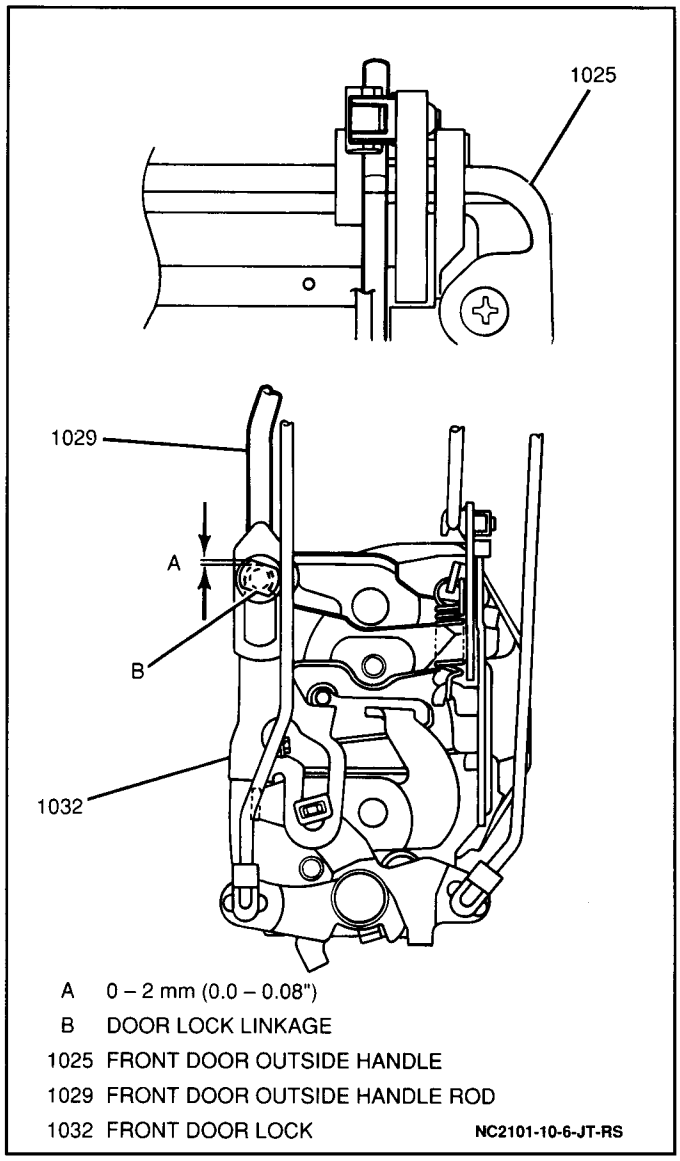

Figure 9 Front Door Outside Handle Rod Adjustment

Inspect

- For tears and holes in water deflector. To repair, apply waterproof tape to both sides of the water deflector.
- Apply adhesive to back of water deflector.
5. Water deflector to door (Figure 3).
6. Interior trim to door. Refer to "Interior Trim" earlier in this section.

Lock Cylinder

Figures 3 and 5

Remove or Disconnect

1. Interior trim from door. Refer to "Interior Trim" earlier in this section.
- Peel water deflector away from door (Figure 3).
2. Front door lock cylinder lock rod from lock cylinder.
3. Retaining clip and front door lock cylinder from door.

Install or Connect

1. Front door lock cylinder to door; secure with retaining clip.
2. Front door lock cylinder lock rod to lock cylinder.

Inspect

- For tears and holes in water deflector. To repair, apply waterproof tape to both sides of the water deflector.

- Apply adhesive to back of water deflector.
3. Water deflector to door (Figure 3).
4. Interior trim to door. Refer to "Interior Trim" earlier in this section.

Hinges

Figures 5, 10, 11 and 12

Remove or Disconnect

- Place a piece of wood between a floor jack and the door and support the door (Figure 10).

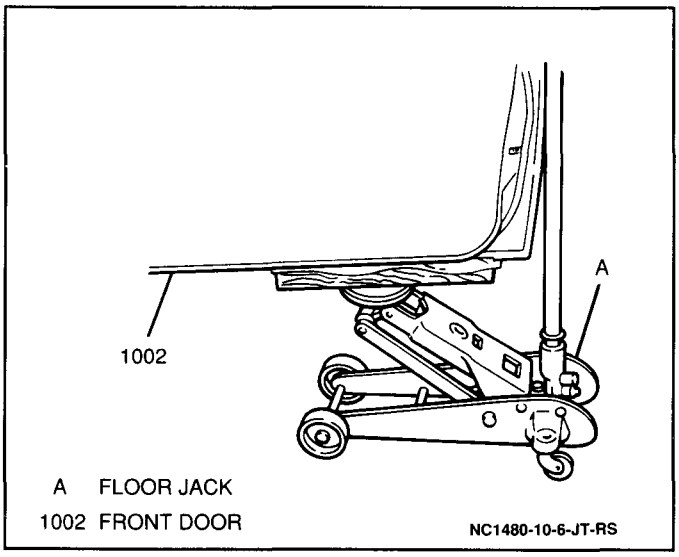

Figure 10 Support Front Door With Floor Jack

- Mark the position of door hinge on door.
1. Door open stop pin (Figure 11).

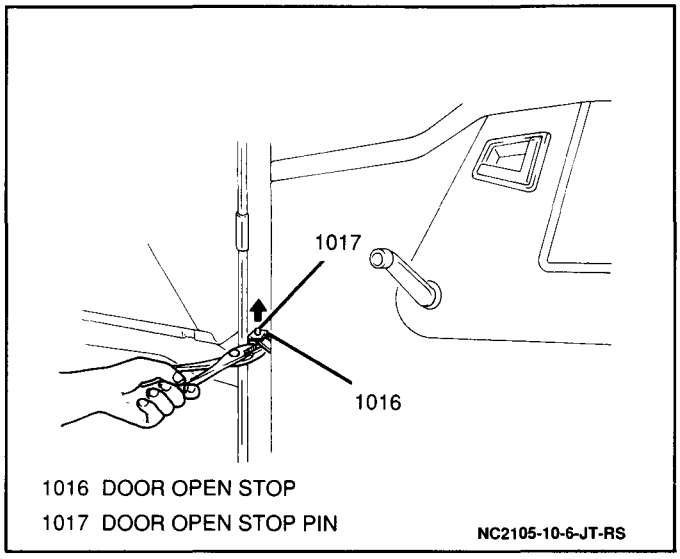

Figure 11 Removing Door Open Stop Pin

2. Four bolts and door from hinges (Figure 12).

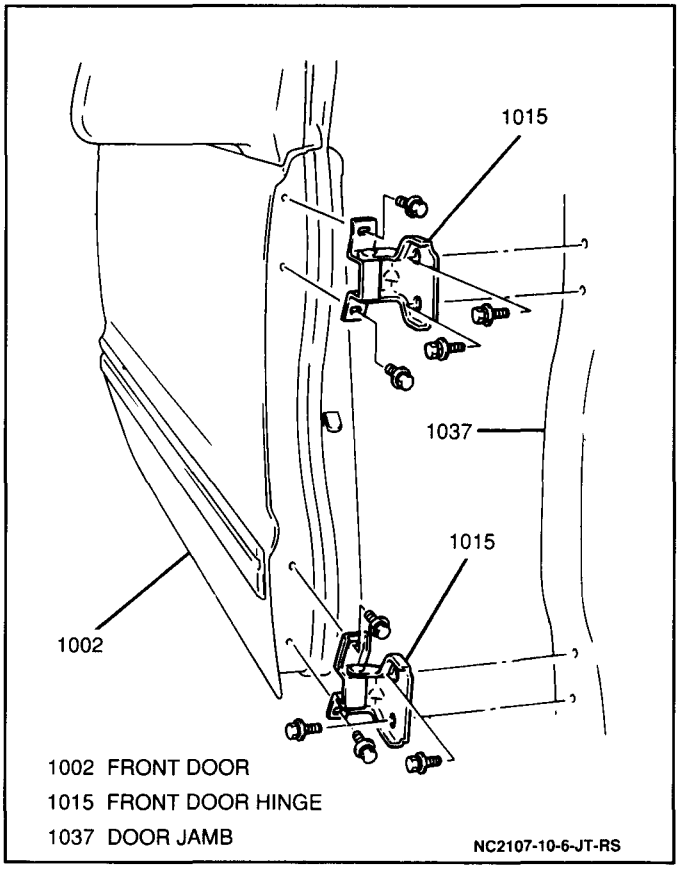

Figure 12 Door Hinges

3. Two bolts and hinge from door jamb.

Remove or Disconnect

1. Hinge to door jamb; secure with two bolts (Figure 12).

Tighten

- Hinge-to-door jamb bolts to 34 N·m (25 lb.ft.).

2. Door to hinges; secure with four bolts.

Tighten

- Door-to-hinge bolts to 34 N·m (25 lb.ft.).

3. Door open stop pin (Figure 11).

Adjust

- Door lock striker. Refer to "Door Lock Striker" earlier in this section.

Windows

Figures 1, 3, 13, 14 and 15

CAUTION: Safety glasses and work gloves should be worn to reduce the chance of personal injury should the window break during removal or installation procedures.

Remove or Disconnect

1. Interior trim from door. Refer to "Interior Trim" earlier in this section.
- Lower front door window completely.
- Using a flat-bladed tool wrapped in tape, gently pry inner sealing strip from door (Base models).
- Using a flat-bladed tool wrapped in tape, gently pry outer sealing strip from door.
- Peel water deflector away from door (Figure 3).
2. Two screws securing lower sash channel to regulator equalizer bracket (Figure 13).

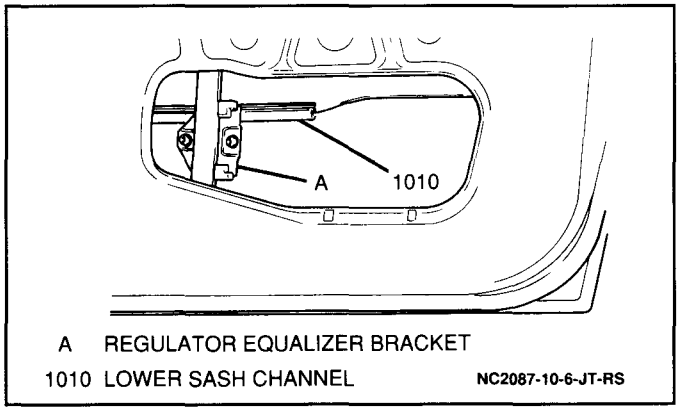

Figure 13 Lower Sash Channel Retaining Screws

- Lift window out from door, tilt top of window inward to clear regulator run channel.
- Place window on a protective surface.
- Carefully pry window from lower sash channel rubber.

Install or Connect

- Coat lower sash channel rubber with soapy water to ease installation of window.
- Tap lower sash channel onto window with a soft mallet. Position window in channel so that the distance from the sash channel rear screw hole to the lower rear corner of the window is 398.5 mm (15.69-inches) (Figure 14).

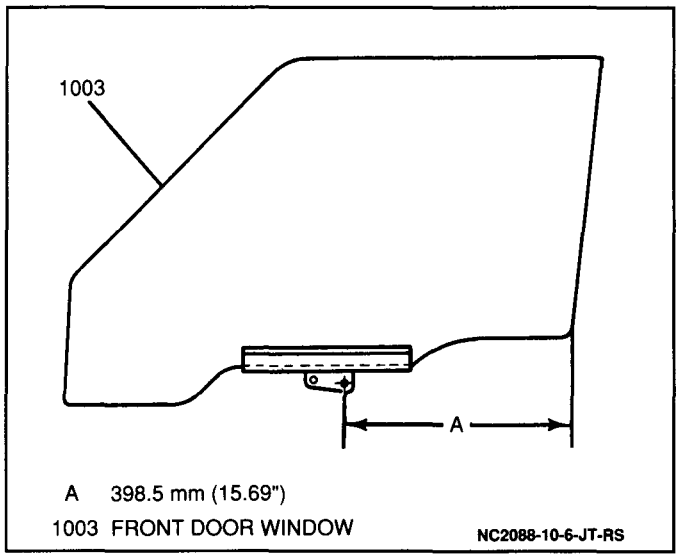

Figure 14 Lower Sash Channel Position

1. Window into door.
2. Lower sash channel to regulator equalizer bracket; secure with two screws.

Adjust

- Regulator equalizer bracket screws so that measurements between the window and the front door frame are equal at points "A" and "B" (Figure 15).

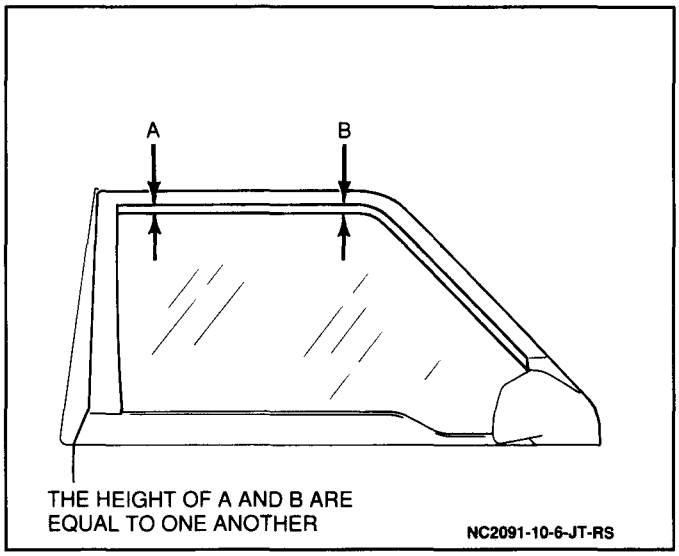

Figure 15 Correct Window Positioning

Inspect

- For tears and holes in water deflector. To repair, apply waterproof tape to both sides of the water deflector.

- Apply adhesive to back of water deflector.

3. Water deflector to door (Figure 3).
4. Outer sealing strip to door; press into place.
5. Inner sealing strip to door; press into place (Base models).
6. Interior trim from door. Refer to "Interior Trim" earlier in this section.

Regulators

Figures 1, 16 and 17

Remove or Disconnect

1. Window from front door. Refer to "Windows" earlier in this section.
2. Seven regulator mounting screws (Figure 16); slide regulator through the large opening in the inner door panel and remove from vehicle.

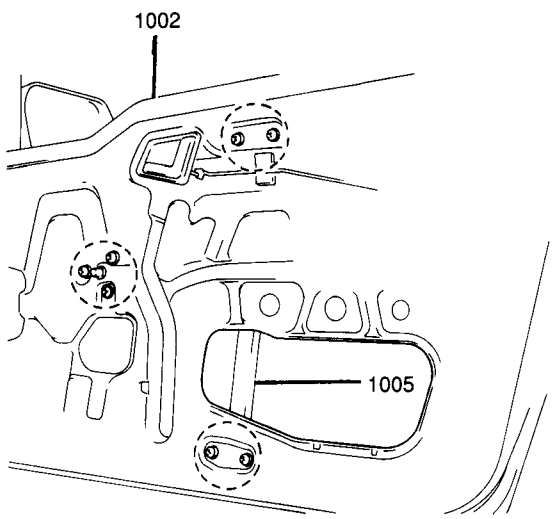

1002 FRONT DOOR
1005 REGULATOR
NC2094-10-6-JT-RS

Figure 16 Regulator Mounting Screws

Install or Connect

- Apply a multipurpose grease to all lubrication and sliding points (Figure 17).

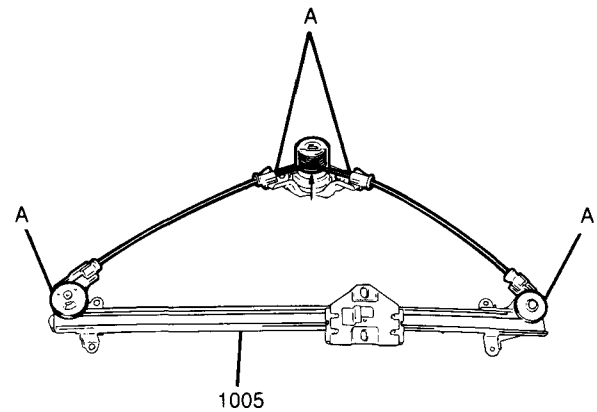

A LUBRICATION POINTS
1005 REGULATOR
NC2095-10-6-JT-RS

Figure 17 Regulator Lubrication Points

1. Regulator through large opening in the inner door panel.
2. Regulator to door; secure with seven screws (Figure 16).
3. Window to front door. Refer to "Windows" earlier in this section.

SPECIFICATIONS

FASTENER TORQUES

Front Door Outside Handle-to-Door Nuts	10 N·m (89 lb.in.)
Hinge-to-Door Jamb Bolts	34 N·m (25 lb.ft.)
Door-to-Hinge Bolts	34 N·m (25 lb.ft.)

SERVICE PARTS INFORMATION

Component Name Used in Section 10-6	Reference Name in Service Parts Catalog	Group Number
Door Open Stop	Stop, Front Door Open	16.323
Door Open Stop Pin	Pin, Front Door Open Stop Body	16.323
Front Door	Panel Asm, Front Door	16.150
Front Door Armrest	Armrest, Front Door	14.686
Front Door Hinge	Hinge, Front Door	16.320
Front Door Lock	Latch Asm, Front Door	16.330
Front Door Lock Cylinder	Cylinder Kit, Lock Set Front Door	16.328
Front Door Lock Knob	Knob, Front Door Inside Lock Cap	16.341
Front Door Lock Knob Trim Bezel	Ferrule, Front Door Inside Handle Lock Knob	16.341
Front Door Lock Striker	Striker, Front Door Latch	16.335
Front Door Outside Handle	Handle, Front Door Outer	16.350
Front Door Window	Glass, Frt Dr Wdo	16.180
Inner Mirror Trim	Garnish, Front Door Sash Bracket Inner	16.069
Inner Sealing Strip	Weatherstrip, Door Inner	16.183
Inside Door Handle Trim Bezel	Handle, Front Door Inside	16.346
Interior Trim	Trim Asm, Front Door	16.165
Lower Sash Channel	Channel, Front Glass Bottom	16.190
Lower Sash Channel Rubber	Rubber, Frt Glass Bottom Channel	16.183
Mirror	Mirror Asm, Front Door Outside Rear View	16.068
Outer Mirror Trim	Garnish, Outside Mirror Bracket	16.069
Outer Sealing Strip	Weatherstrip, Front Door Outer	16.183
Pull Handle Case	Case, Front Door Inner Panel Pull Handle Deluxe CL	16.345
Water Deflector	Cover, Front Door Sealing	16.165
Weatherstrip	Weatherstrip, Front Door Opening	16.225
Regulator	Regulator Asm, Frt Dr	16.260
Regulator Handle	Handle, Frt Dr Wdo Reg	16.270
Regulator Handle Retaining Clip	Spring, Frt Dr Wdo Reg Hdl	16.270

SECTION 10-7

REAR QUARTERS

NOTICE: The theft deterrent label found on some major sheet metal, engines, and transmission must be masked prior to painting, rustproofing, undercoating, etc. The mask must be removed following the above operations. Failure to keep the label clean and readable may result in liability for violation of Federal Vehicle Theft Prevention Standard and subject the vehicle owner to possible suspicion that the part was stolen.

NOTICE: When fasteners are removed, always reinstall them at the same location from which they were removed. If a fastener needs to be replaced, use the correct part number fastener for that application. If the correct part number fastener is not available, a fastener of equal size and strength (or stronger) may be used. Fasteners that are not reused, and those requiring thread-locking compound, will be called out. The correct torque values must be used when installing fasteners that require them. If the above procedures are not followed, parts or system damage could result.

CONTENTS

On-Vehicle Service 10-7-2
Interior Trim 10-7-2
Rear Quarter Window Interior Trim 10-7-2
Rear Quarter Interior Trim Panel 10-7-3
Rear Seat Belt Retractor Trim Panel — Hardtop Models 10-7-3
Rear Seat Belt Retractor Trim Cover — Convertible Models 10-7-4
B-Pillar Lower Trim Panel 10-7-5
B-Pillar Upper Trim Panel — Convertible Models 10-7-5
Rear Quarter Wheelhousing Interior Trim Panel 10-7-6
Exterior Trim 10-7-6
Rear Quarter Moldings 10-7-6
Rocker Panel Trim Covers 10-7-7
Fuel Filler Door 10-7-8
Movable Quarter Window — Hardtop Models 10-7-8
Adhesive Service Kit 10-7-8
Window 10-7-8
Weatherstrip 10-7-10
Specifications 10-7-11
Fastener Torques 10-7-11
Service Parts Information 10-7-11

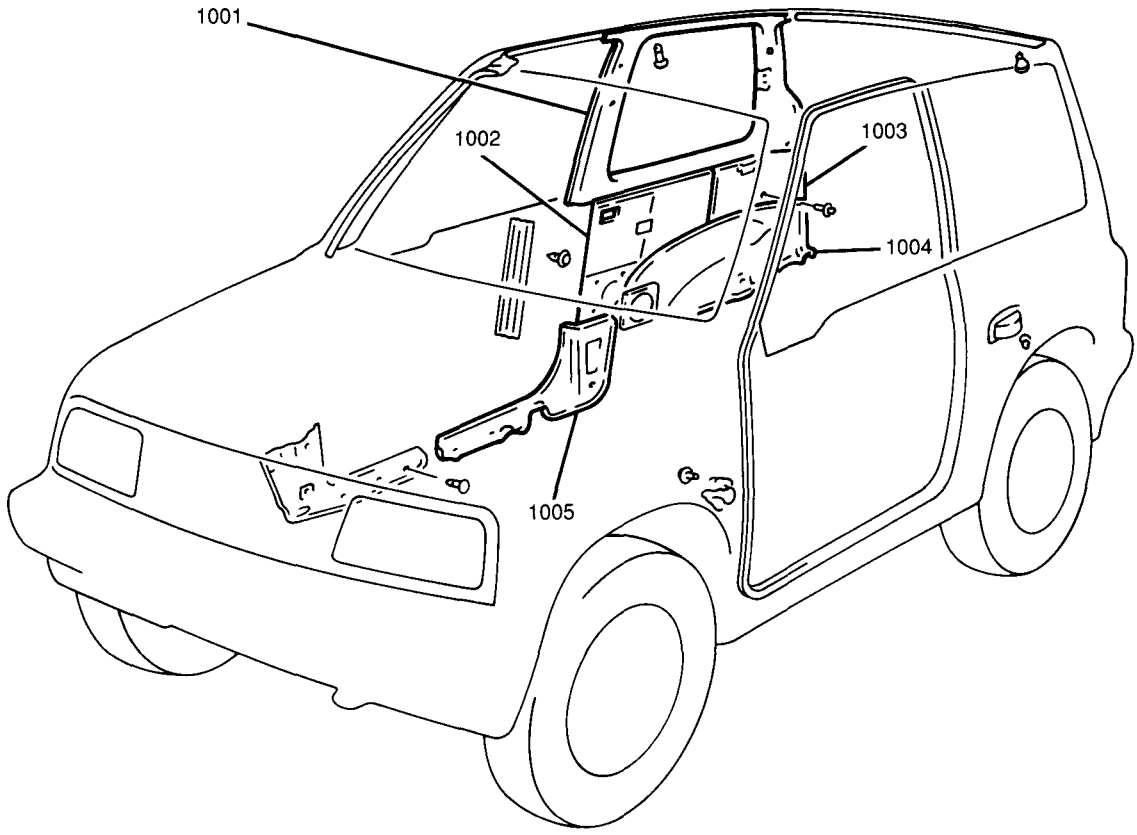

1001 REAR QUARTER WINDOW INTERIOR TRIM
1002 REAR QUARTER INTERIOR TRIM PANEL
1003 REAR SEAT BELT RETRACTOR TRIM PANEL
1004 REAR QUARTER WHEELHOUSING INTERIOR TRIM PANEL
1005 B-PILLAR LOWER TRIM PANEL

NC8820-10-7-JT-RS

Figure 1 Rear Quarter Interior Trim — Hardtop Model Shown

ON-VEHICLE SERVICE

INTERIOR TRIM

Rear Quarter Window Interior Trim

Figures 1 and 2

Remove or Disconnect

- Open rear quarter window.

1. Two screws from rear quarter window latch (Figure 2).

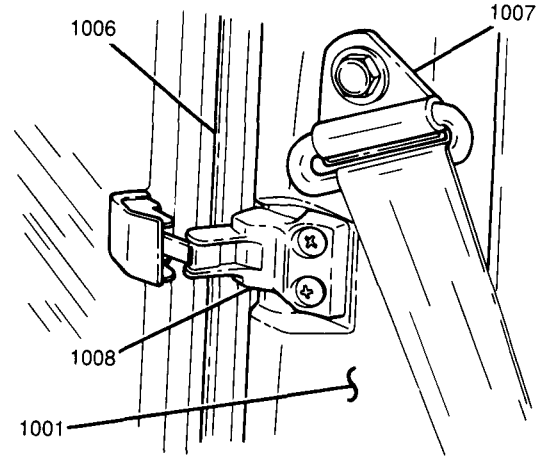

1001 REAR QUARTER WINDOW INTERIOR TRIM
1006 REAR QUARTER WINDOW WEATHERSTRIP
1007 REAR SEAT BELT GUIDE LOOP
1008 REAR QUARTER WINDOW LATCH

NC8821-10-7-JT-RS

Figure 2 Rear Quarter Window Latch

- Pull quarter window weatherstrip from body.
2. Front and rear seat belt guide loop anchor bolts.
- Loosen rear door opening weatherstrip.
- Loosen front door opening weatherstrip.
3. Six plastic clips and quarter window interior trim from vehicle.

Install or Connect

1. Rear quarter window interior trim to vehicle; secure with six plastic clips.
- Press front door opening weatherstrip into place.
- Press rear door opening weatherstrip into place.
2. Front and rear seat belt guide loop anchor bolts.

Tighten

- Front and rear seat belt guide loop anchor bolts to 45 N·m (33 lb.ft.).

3. Rear quarter window weatherstrip to body; press into place.
4. Rear quarter window latch to vehicle; secure with two screws (Figure 2).
- Close rear quarter window.

Rear Quarter Interior Trim Panel

Figures 1, 3 and 4

Remove or Disconnect

- One screw from front seat belt trim bezel (Figure 3).

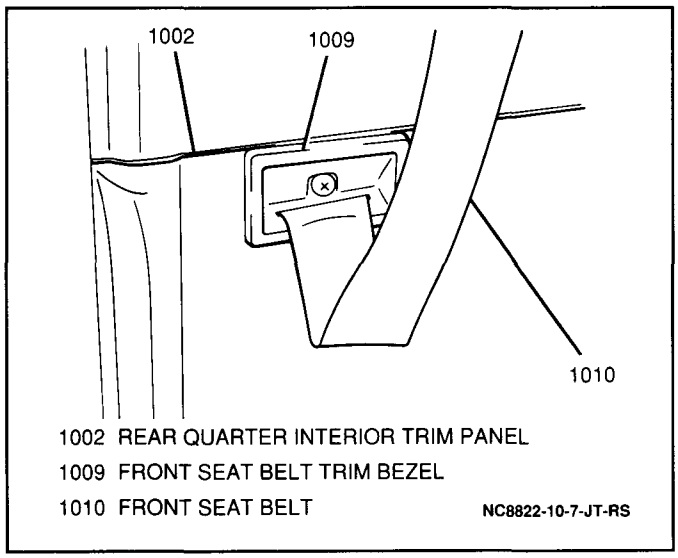

Figure 3 Front Seat Belt Trim Bezel

- Pull rear quarter interior trim panel from vehicle, disengaging plastic clips (Figure 4).

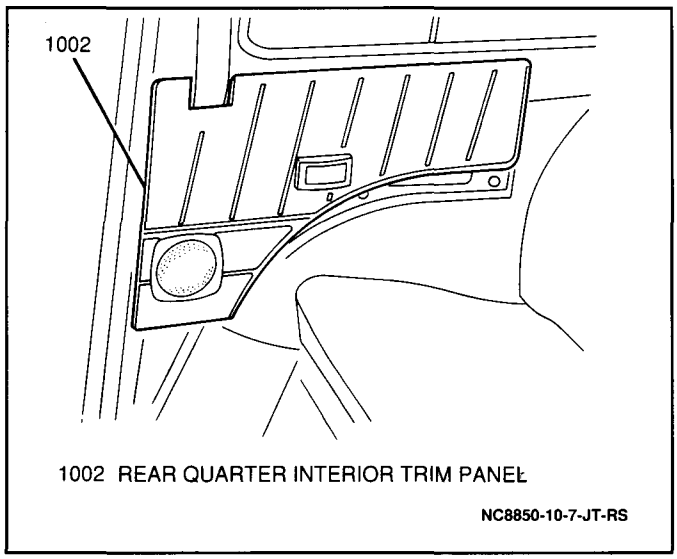

Figure 4 Rear Quarter Interior Trim Panel

Install or Connect

1. Rear quarter interior trim panel to vehicle; press into place, engaging plastic clips (Figure 4).
2. Front seat belt trim bezel to vehicle; secure with one screw.

Rear Seat Belt Retractor Trim Panel — Hardtop Models

Figures 1 and 5

Remove or Disconnect

- Loosen rear door opening weatherstrip.
- Two plastic retaining clips and rear seat belt retractor trim panel from vehicle (Figure 5).

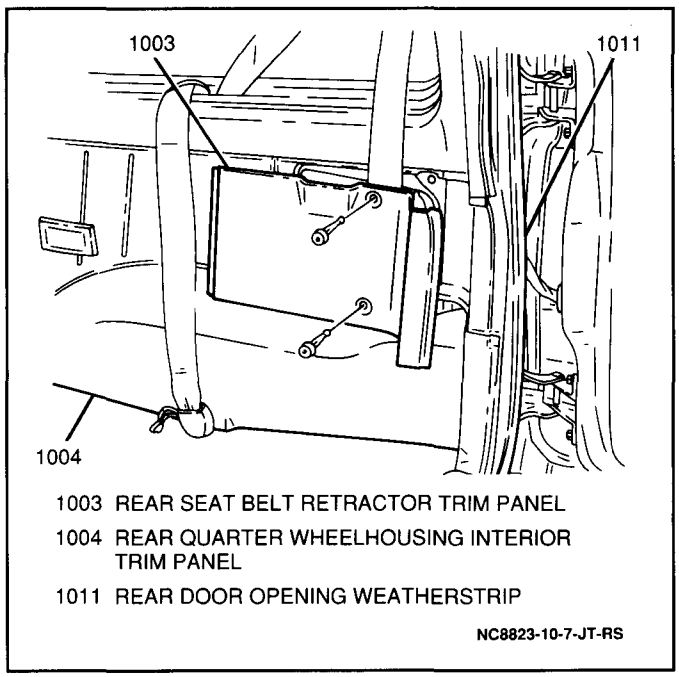

Figure 5 Rear Seat Belt Retractor Trim Panel — Hardtop Models

Install or Connect

- Rear seat belt retractor trim panel to vehicle; secure with two plastic retaining clips (Figure 5).
- Press rear door opening weatherstrip into place.

Rear Seat Belt Retractor Trim Cover — Convertible Models

Figures 6 through 9

Remove or Disconnect

- Raise rear seat cushion to gain access to the rear seat belt lower anchor bolt.

1. Rear seat belt lower anchor bolt (Figure 6).

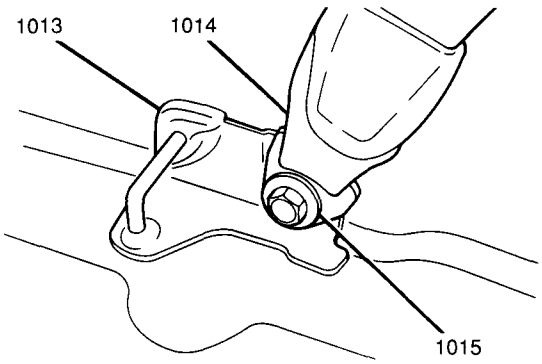

1013 REAR SEAT LOCK STRIKER
1014 REAR SEAT BELT
1015 REAR SEAT BELT LOWER ANCHOR BOLT
NC8824-10-7-JT-RS

Figure 6 Rear Seat Belt Lower Anchor Bolt — Typical

2. Two screws and rubber stopper from vehicle (Figure 7).

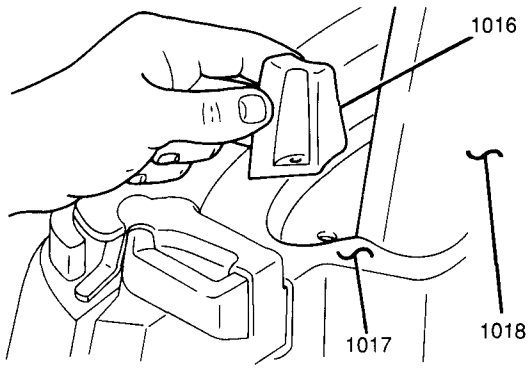

1016 RUBBER STOPPER
1017 REAR SEAT BELT RETRACTOR TRIM COVER
1018 REAR SEAT BELT SHOULDER BRACKET COVER
NC8825-10-7-JT-RS

Figure 7 Rubber Stopper — Convertible Models

3. Rear seat belt guide loop anchor bolt (Figure 8).

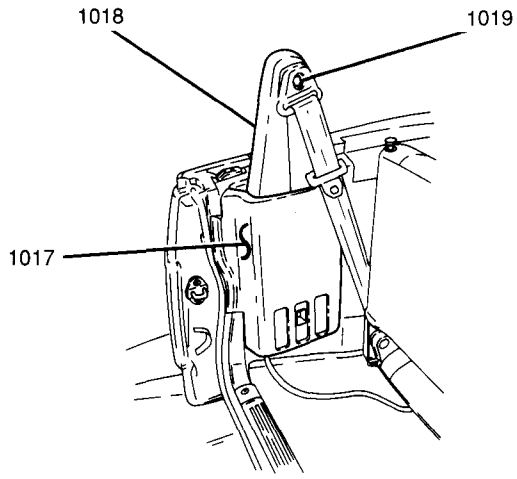

1017 REAR SEAT BELT RETRACTOR TRIM COVER
1018 REAR SEAT BELT SHOULDER BRACKET COVER
1019 REAR SEAT BELT GUIDE LOOP ANCHOR BOLT
NC8826-10-7-JT-RS

Figure 8 Rear Seat Belt Guide Loop Anchor Bolt Location — Convertible Models

- Loosen rear door opening weatherstrip.

4. One screw and rear seat belt retractor trim cover (Figure 9).

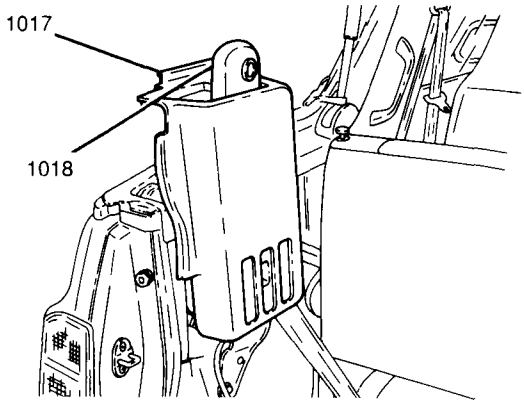

1017 REAR SEAT BELT RETRACTOR TRIM COVER
1018 REAR SEAT BELT SHOULDER BRACKET COVER
NC8827-10-7-JT-RS

Figure 9 Rear Seat Belt Retractor Trim Cover — Convertible Models

Install or Connect

1. Rear seat belt retractor trim cover to vehicle; secure with one screw (Figure 9).
- Press rear door opening weatherstrip into place.
2. Rear seat belt guide loop anchor bolt (Figure 8).

Tighten

- Rear seat belt guide loop anchor bolt to 45 N·m (33 lb.ft.).

3. Rubber stopper to vehicle; secure with two screws (Figure 7).
4. Rear seat belt lower anchor bolt (Figure 6).

Tighten

- Rear seat belt lower anchor bolt to 45 N·m (33 lb.ft.).

- Lower rear seat.

B-Pillar Lower Trim Panel

Figures 1 and 10

Remove or Disconnect

1. Front seat belt lower anchor bolt (Figure 10).

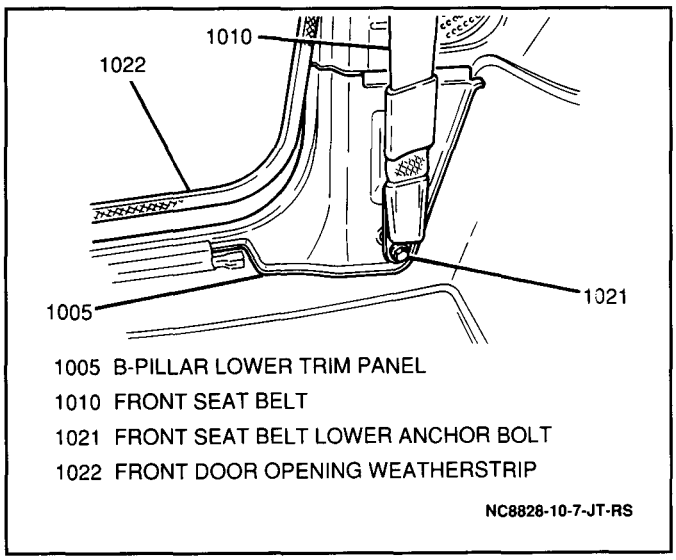

Figure 10 B-Pillar Lower Trim Panel

- Loosen front door opening weatherstrip (Figure 10).
2. Two plastic clips and B-pillar lower trim panel from vehicle (Figure 10).

Install or Connect

1. B-pillar lower trim panel to vehicle; secure with two plastic clips (Figure 10).
- Press front door opening weatherstrip into place.
2. Front seat belt lower anchor bolt (Figure 10).

Tighten

- Front seat belt lower anchor bolt to 45 N·m (33 lb.ft.).

B-Pillar Upper Trim Panel — Convertible Models

Figure 11

Remove or Disconnect

1. Front seat belt guide loop anchor bolt (Figure 11).
2. Two screws and assist handle from vehicle (Figure 11).
3. Three plastic clips and B-pillar upper trim panel from vehicle (Figure 11).

Install or Connect

1. B-pillar upper trim panel to vehicle; secure with three plastic clips (Figure 11).

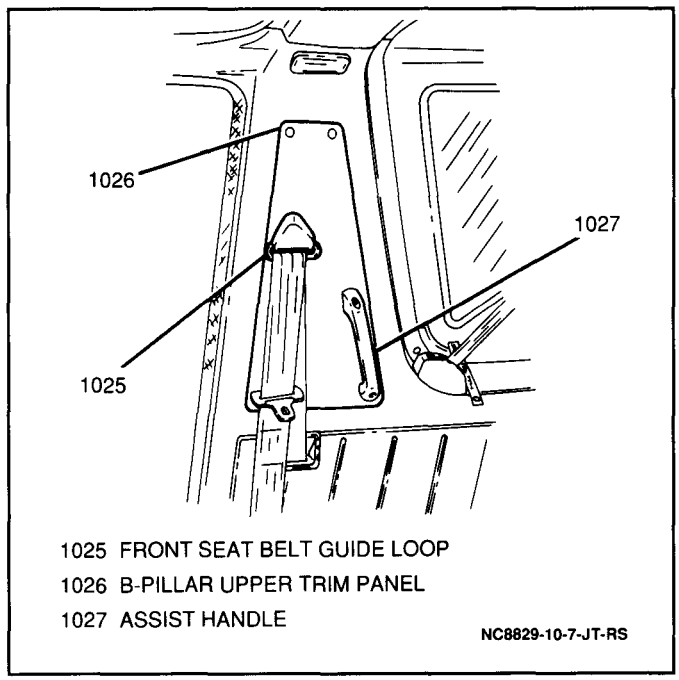

Figure 11 B-Pillar Upper Trim Panel

2. Assist handle to vehicle; secure with two screws (Figure 11).
3. Front seat belt guide loop anchor bolt (Figure 11).

Tighten

- Front seat belt guide loop anchor bolt to 45 N·m (33 lb.ft.).

Rear Quarter Wheelhousing Interior Trim Panel

Figures 3, 4, 5 and 12

Remove or Disconnect

1. One screw from front seat belt trim bezel (Figure 3).
- Pull rear quarter interior trim panel from vehicle, disengaging plastic clips (Figure 4).
- Loosen rear door opening weatherstrip.
2. Two plastic retaining clips and rear seat belt retractor trim panel from vehicle (hardtop models, Figure 5).

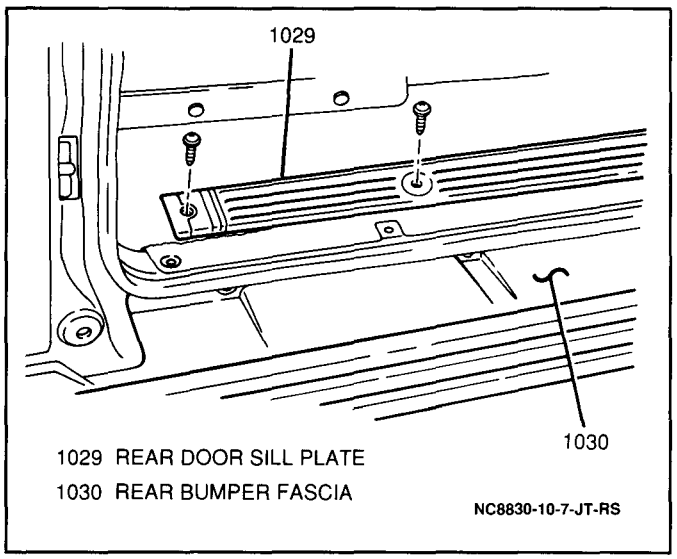

Figure 12 Rear Door Sill Plate

3. Rear seat belt retractor trim cover from vehicle. Refer to "Rear Seat Belt Retractor Trim Cover — Convertible Models" earlier in this section.
4. Four screws and rear door sill plate from vehicle (Figure 12).
5. Plastic snap at the front of the rear floor carpet.
- Pull rear floor carpet away and remove rear quarter wheelhousing trim panel from vehicle.

Install or Connect

1. Rear quarter wheelhousing trim panel to vehicle.
- Place rear floor carpet into position and secure with plastic snap at the front of the rear floor carpet.
2. Rear door sill plate to vehicle; secure with four screws (Figure 12).
3. Rear seat belt retractor trim cover. Refer to "Rear Seat Belt Retractor Trim Cover — Convertible Models" earlier in this section.
4. Rear seat belt retractor trim panel to vehicle; secure with two plastic retaining clips (hardtop models, Figure 5).
- Press rear door opening weatherstrip into place.
5. Rear quarter interior trim panel to vehicle; press into place, engaging plastic clips (Figure 4).
6. Front seat belt trim bezel to vehicle; secure with one screw (Figure 3).

EXTERIOR TRIM

Rear Quarter Moldings

All exterior trim and moldings are retained with adhesive. Refer to SECTION 10-1 for all exterior trim and molding service procedures.

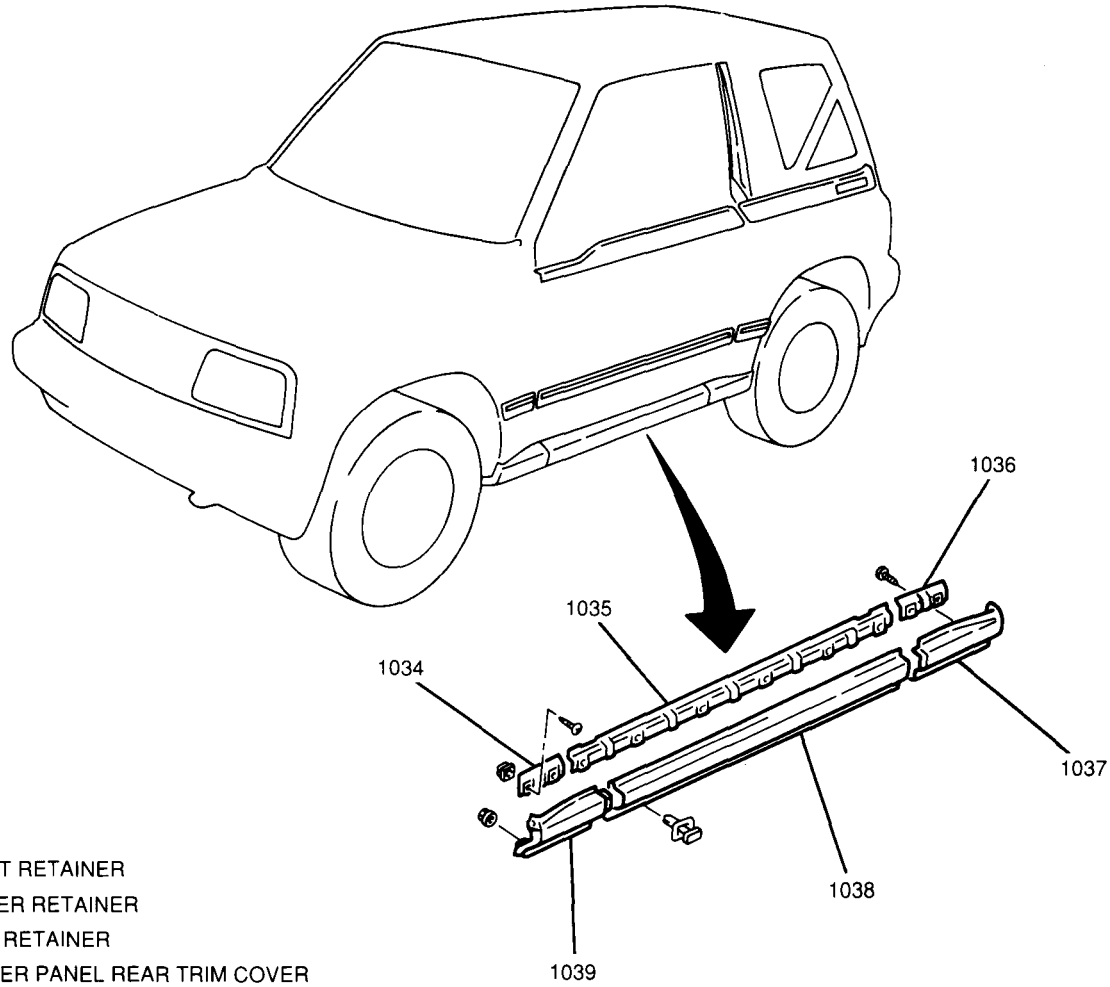

1034 FRONT RETAINER
1035 CENTER RETAINER
1036 REAR RETAINER
1037 ROCKER PANEL REAR TRIM COVER
1038 ROCKER PANEL CENTER TRIM COVER
1039 ROCKER PANEL FRONT TRIM COVER

NC8832-10-7-JT-RS

Figure 13 Rocker Panel Trim Covers

Rocker Panel Trim Covers

Front

Figures 13 and 14

Remove or Disconnect

- One screw, one nut and lift rocker panel front trim cover off front retainer and remove cover from rocker panel (Figure 14).

Install or Connect

- Fit rocker panel front trim cover onto front retainer; secure with one screw and one nut (Figure 14).

Tighten

- Rocker panel front trim cover nut to 15 N·m (11 lb.ft.).

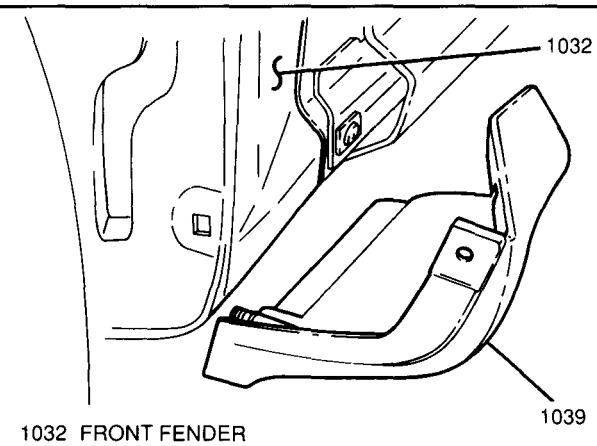

1032 FRONT FENDER
1039 ROCKER PANEL FRONT TRIM COVER

NC8831-10-7-JT-RS

Figure 14 Rocker Panel Front Trim Cover

Center

Figure 13

Remove or Disconnect

- Four plastic push pins from rocker panel center trim cover.
- Lift rocker panel center trim cover off center retainer and remove cover from rocker panel (Figure 13).

Install or Connect

- Fit rocker panel center trim cover onto center retainer; secure to rocker panel with four plastic push pins (Figure 13).

Rear

Figures 13 and 15

Remove or Disconnect

- One nut and lift rocker panel rear trim cover off rear retainer and remove cover from rocker panel (Figure 15).

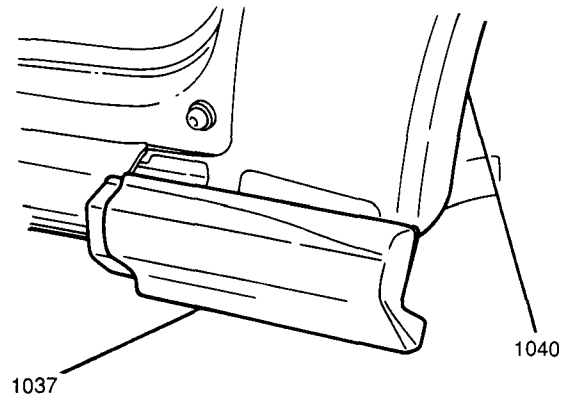

1037 ROCKER PANEL REAR TRIM COVER
1040 REAR QUARTER PANEL
NC8833-10-7-JT-RS

Figure 15 Rocker Panel Rear Trim Cover

Install or Connect

- Fit rocker panel rear trim cover onto rear retainer; secure with one nut (Figure 15).

Tighten

- Rocker panel rear trim cover nut to 15 N·m (11 lb.ft.).

FUEL FILLER DOOR

Remove or Disconnect

- Two screws and fuel filler door from vehicle.

Install or Connect

- Fuel filler door to vehicle; secure with two screws.

MOVABLE QUARTER WINDOW — HARDTOP MODELS

Adhesive Service Kit

Adhesive caulking kit (urethane) GM P/N 12345633 contains some of the items, including piano wire and primer, needed to replace the rear quarter window. An equivalent adhesive kit may be used. Use an adhesive that has a minimum shearing strength of 40 kg/cm (569 lb./in.).

Additional items required:

- Solvent for cleaning edge of window (preferably alcohol).
- Household cartridge type caulking gun.
- Commercial type razor knife (for cutting around edge of window).
- Two new brushes for primer application.

Important

- Each adhesive has its own drying and setting time and must be handled and used according to specific procedures. Failure to follow these procedures could result in a poor window-to-hinge bond. Be sure to read the adhesive instructions carefully and observe each step of the procedure very closely.

Window

Figures 2, 16 and 17

Remove or Disconnect

- Fully open rear quarter window.

1. Two screws from rear quarter window latch (Figure 2).

- Close rear quarter window and secure to body with tape.
- Pull rear quarter window hinge cover back and remove two screws from rear quarter window hinge (Figure 16).

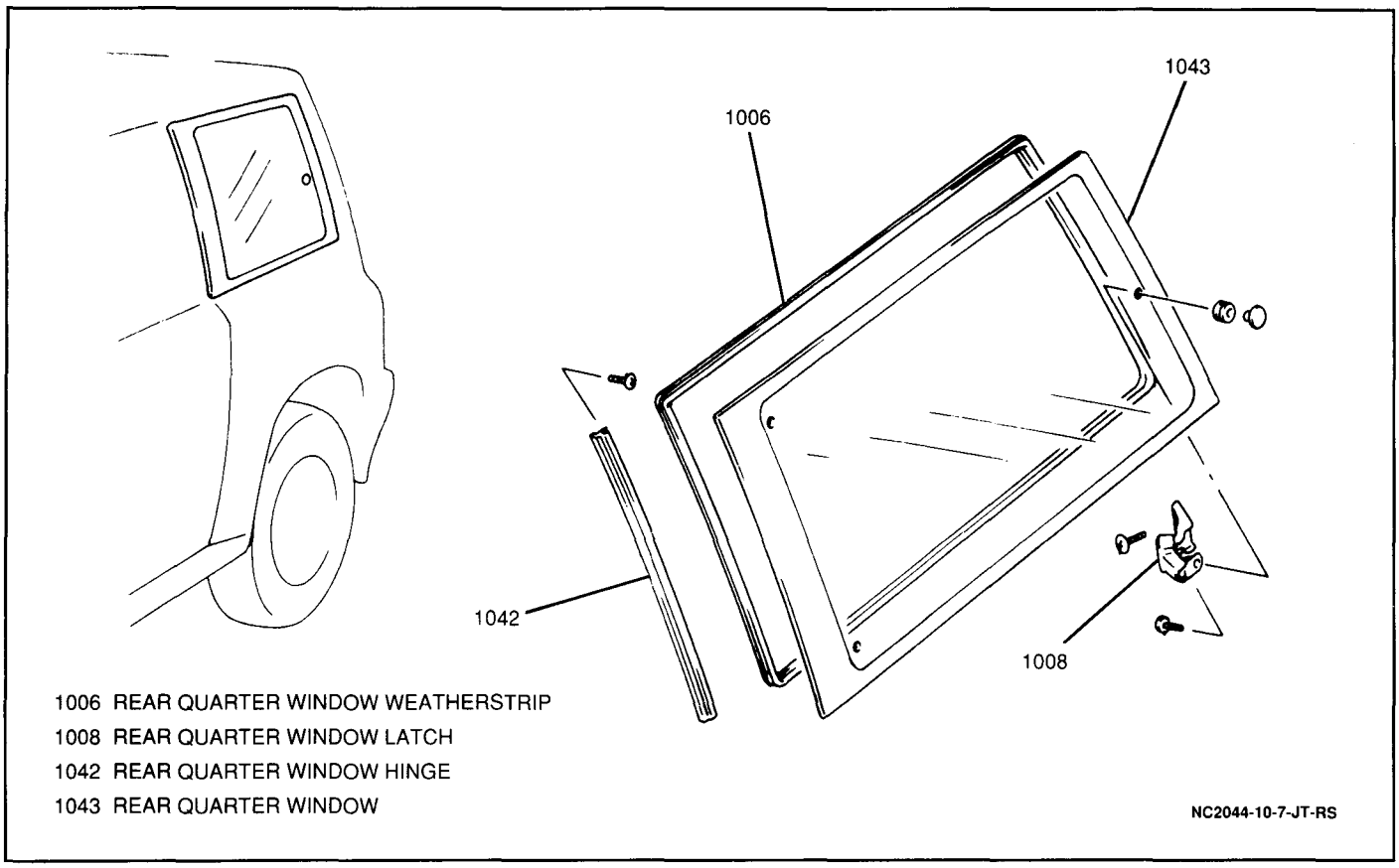

Figure 16 Rear Quarter Window

- Untape and remove rear quarter window from vehicle.
- Using a commercial type razor knife, cut adhesive between the rear quarter window and the rear quarter window hinge.

2. Rear quarter window from rear quarter window hinge.
3. One screw and rear quarter window latch from window.

Clean

1. Forward edge of rear quarter window to which adhesive will be applied by wiping it with a clean, alcohol dampened cloth and allowing it to air dry.
2. Rear quarter window hinge rubber channel to which adhesive will be applied by wiping it with a clean, alcohol dampened cloth and allowing it to air dry.

Install or Connect

- Using a new brush, apply metal primer to the inside channel of rear quarter window hinge (Figure 17).
- Using a new brush, apply window primer to surface of rear quarter window where adhesive will be applied (Figure 17).

Important

- Refer to primer manufacturer's instructions for proper handling instructions and drying time.
- Do not touch primer-coated surface.
- Apply a continuous bead of urethane adhesive into rear quarter window hinge channel (Figure 17).
- Insert rear quarter window into hinge channel (Figure 17).

1. Rear quarter window latch to window; secure with one screw.
2. Rear quarter window to vehicle; secure rear quarter window hinge to vehicle with two screws.
3. Rear quarter window latch to vehicle; secure with two screws (Figure 2).

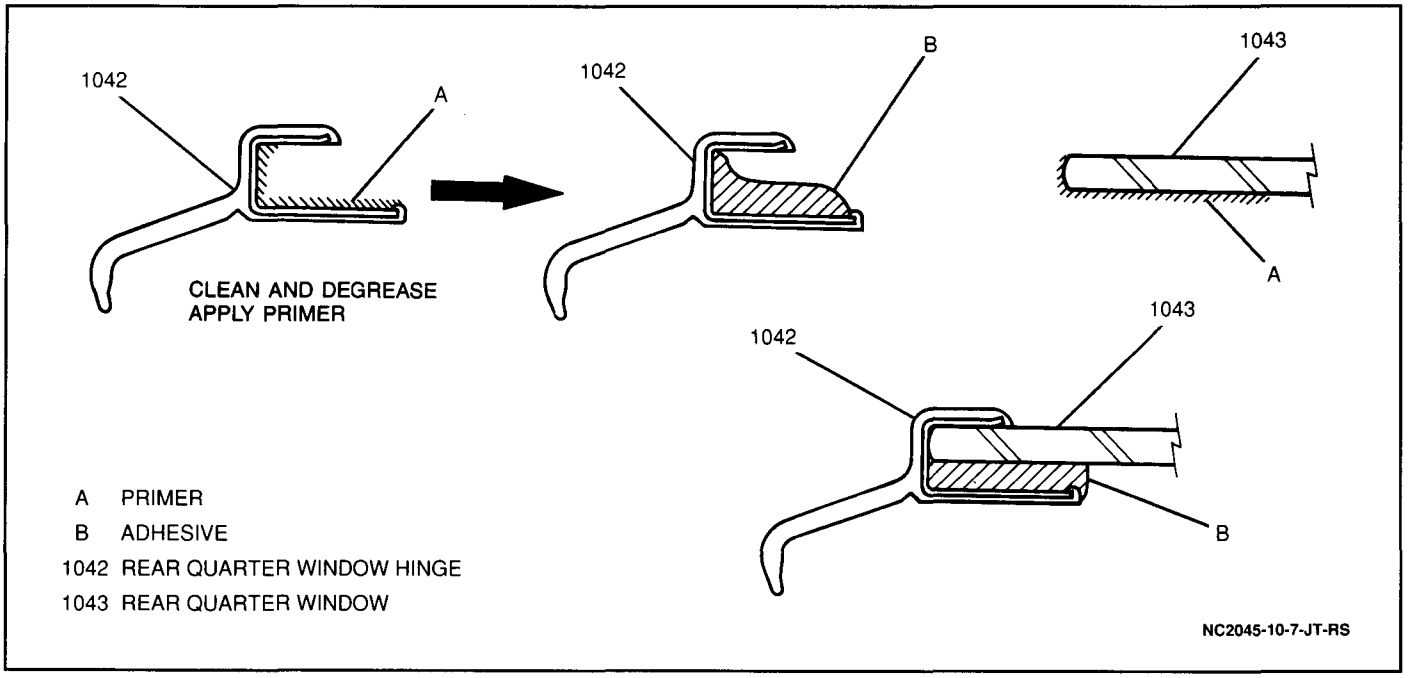

Figure 17 Rear Quarter Window-to-Hinge Installation

- Close rear quarter window.

Important

- Do not drive vehicle until adhesive is set.
- Water applied on top of urethane adhesive will speed the cure of the urethane.
- Do not used compressed air, heat or infrared light to accelerate drying time. Allow adhesive to dry normally.
- Slamming the vehicle doors before adhesive sets may cause the rear quarter window to shift or become loose.

Weatherstrip

Remove or Disconnect

- Fully open rear quarter window.
- Pull rear quarter window weatherstrip from window opening flange.

Install or Connect

- Rear quarter window weatherstrip to window opening flange; press into place.
- Close rear quarter window.

SPECIFICATIONS

FASTENER TORQUES

Front Seat Belt Guide Loop Anchor Bolt	45 N·m (33 lb.ft.)
Front Seat Belt Lower Anchor Bolt	45 N·m (33 lb.ft.)
Rear Seat Belt Guide Loop Anchor Bolt	45 N·m (33 lb.ft.)
Rear Seat Belt Lower Anchor Bolt	45 N·m (33 lb.ft.)
Rocker Panel Front Trim Cover Nut	15 N·m (11 lb.ft.)
Rocker Panel Rear Trim Cover Nut	15 N·m (11 lb.ft.)

SERVICE PARTS INFORMATION

Component Name Used in Section 10-7	Reference Name in Service Parts Catalog	Group Number
B-Pillar Lower Trim Panel (Hardtop Models)	Trim, Interior Side Sill Inner Frt	16.575
B-Pillar Upper Trim Panel (Convertible Models)	Trim, C/Plr	16.575
Fuel Filler Door	Door, Fuel Tank Fill	16.570
Rear Quarter Interior Trim Panel	Panel, Qtr Lwr Rear TR Finish	16.575
Rear Quarter Wheelhousing Interior Trim	Trim, Interior Rear Wheel Housing	16.570
Rear Quarter Window	Window, Body Side Rear	16.460
Rear Quarter Window Hinge	Protector, Body Side Window Edge	16.460
Rear Quarter Window Interior Trim	Trim, Interior RR Side Inner Upr	16.575
Rear Quarter Window Latch	Latch, Body Side Window	16.460
Rear Quarter Window Weatherstrip	Weatherstrip, Body Side Frt Wdo	16.460
Rear Seat Belt Retractor Trim Panel (Hardtop Models)	Trim, Interior Rear Side Inner Rear	16.575
Rear Seat Belt Retractor Trim Panel (Convertible Models)	Trim, RR Shoulder Anchor Lower	16.714
Rocker Panel Center Trim Cover	Protector, Sill Plate Center	17.507
Rocker Panel Front Trim Cover	Protector, Sill Plate Front	17.507
Rocker Panel Rear Trim Cover	Protector, Sill Plate Rear	17.507

SECTION 10-8

BODY REAR END

NOTICE: The theft deterrent label found on some major sheet metal, engines, and transmissions must be masked prior to painting, rustproofing, undercoating, etc. The mask must be removed following the above operations. Failure to keep the label clean and readable may result in liability for violation of Federal Vehicle Theft Prevention Standard and subject the vehicle owner to possible suspicion that the part was stolen.

NOTICE: When fasteners are removed, always reinstall them at the same location from which they were removed. If a fastener needs to be replaced, use the correct part number fastener for that application. If the correct part number fastener is not available, a fastener of equal size and strength (or stronger) may be used. Fasteners that are not reused, and those requiring thread-locking compound, will be called out. The correct torque values must be used when installing fasteners that require them. If the above procedures are not followed, parts or system damage could result.

CONTENTS

On-Vehicle Service 10-8-1
Rear Door 10-8-1
Rear Door Interior Trim Panel 10-8-3
Rear Door Water Deflector 10-8-3
Rear Door Handle 10-8-3
Rear Door Lock 10-8-4
Rear Door Lock Cylinder 10-8-6
Rear Door Lock Striker 10-8-6
Rear Door Lock Link 10-8-6
Rear Door Window 10-8-7
Rear Door Hinges 10-8-7
Rear Door License Plate Lamp Cover 10-8-7
Rear Door Support — Hardtop Models 10-8-7
Rear Door Stop 10-8-8
Spare Tire Carrier 10-8-8
Trailer Hitch Draw Bar 10-8-8
Specifications 10-8-10
Fastener Torques 10-8-10
Service Parts Information 10-8-10

ON-VEHICLE SERVICE

REAR DOOR

Figures 1 through 5

Remove or Disconnect

1. Negative (-) battery cable.
2. Spare tire cover.
3. Tire lock, three wheel nuts and spare tire from rear door.
- Unclip rear window frame from rear door at three places and remove rear window from vehicle (convertible models).
- Unzip and remove rear window from folding top (convertible models).
- Open rear door.
4. Fourteen plastic retaining clips and rear door interior trim panel from rear door (Figure 1).

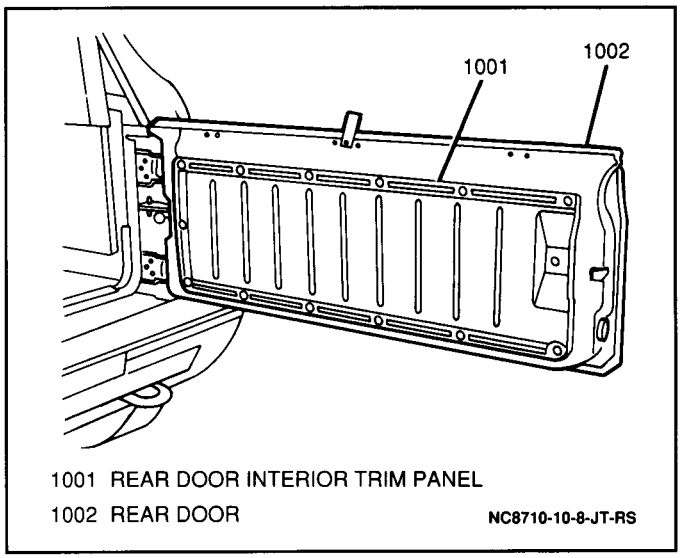

Figure 1 Rear Door Interior Trim Panel

- Pull water deflector away from rear door.

5. Rear defogger electrical connector (hardtop models).
6. Rear wiper motor electrical connector (hardtop models, if equipped).
7. License plate lamp electrical connectors.

- Feed wiring harness through rear door, remove grommet and wiring harness from rear door.

8. One nut attaching rear door support to rear door (hardtop models) (Figure 2).

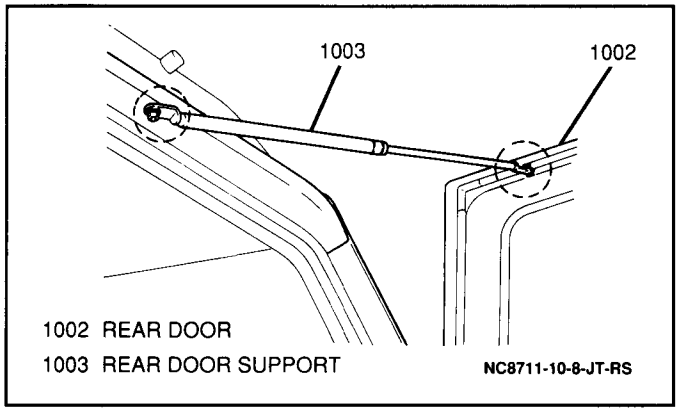

Figure 2 Rear Door Support — Hardtop Models

9. One nut attaching rear door support to rear door opening and remove support from vehicle (hardtop models).

- Place a piece of wood between a floor jack and the rear door to support the door.

10. Rear door open stop pin from rear door open stop (Figure 3).

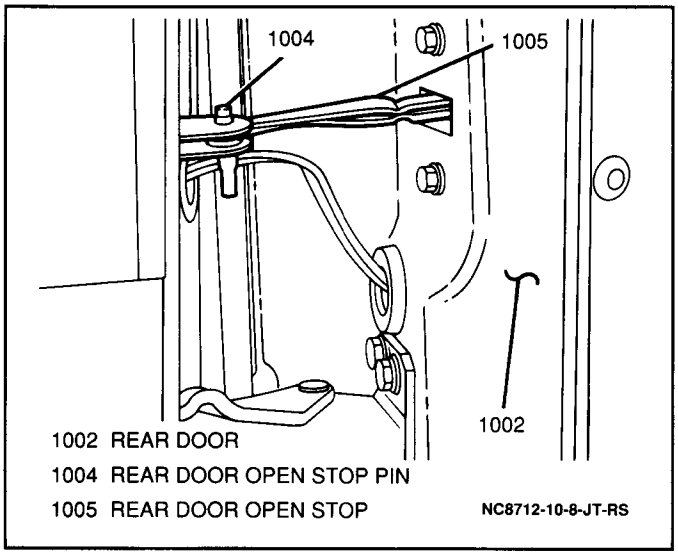

Figure 3 Rear Door Open Stop Pin

11. Four bolts securing the lower hinge to the rear door Figure 4).

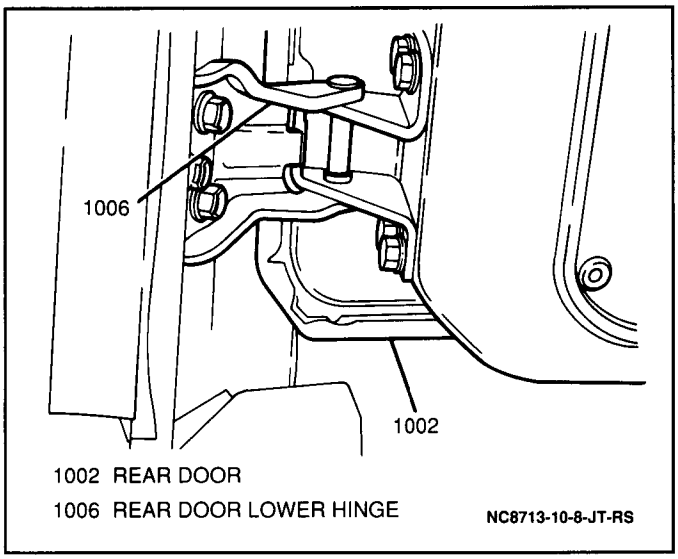

Figure 4 Rear Door Lower Hinge

12. Two bolts securing the upper hinge to the rear door and rear door from vehicle (Figure 5).

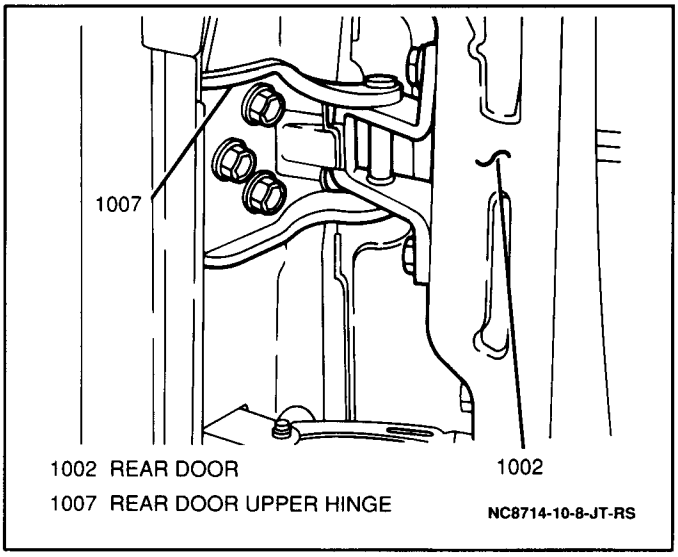

Figure 5 Rear Door Upper Hinge

Install or Connect

1. Rear door to vehicle; secure to upper hinge with two bolts and to lower hinge with four bolts.

Tighten

- Rear door hinge-to-rear door bolts to 34 N·m (25 lb.ft.).

2. Rear door open stop pin to rear door open stop (Figure 3).
3. Rear door support to vehicle; secure with two nuts (connect to rear door opening first, hardtop models, Figure 2).

Tighten

- Rear door support nuts to 15 N·m (11 lb.ft.).

- Feed wiring harness through rear door and install grommet.

4. License plate lamp electrical connectors.
5. Rear wiper motor electrical connector (hardtop models).
6. Rear defogger electrical connector (hardtop models).

Inspect

- For tears and holes in water deflector. Repair using waterproof tape on both sides of the deflector.

- Apply adhesive to the back of the water deflector.

7. Water deflector to door.
8. Rear door interior trim panel to rear door; secure with fourteen plastic retaining clips (Figure 1).

- Close rear door.

9. Rear window to folding top; zip into place (convertible models).
10. Rear window frame to rear door; clip into place at three places (convertible models).
11. Spare tire to rear door; secure with three wheel nuts and one tire lock.

Tighten

- Spare tire wheel nuts to 54 N·m (40 lb.ft.).

12. Spare tire cover.
13. Negative (-) battery cable.

Tighten

- Negative (-) battery cable-to-negative (-) battery terminal retainer to 15 N·m (11 lb.ft.).

Rear Door Interior Trim Panel

Figure 1

Remove or Disconnect

- Fourteen plastic retaining clips and rear door interior trim panel from rear door (Figure 1).

Install or Connect

- Rear door interior trim panel to rear door; secure with fourteen plastic retaining clips (Figure 1).

Rear Door Water Deflector

Figure 1

Remove or Disconnect

- Fourteen plastic retaining clips and rear door interior trim panel from rear door (Figure 1).
- Pull water deflector away from rear door.

Inspect

- For tears and holes in water deflector. Repair using waterproof tape on both sides of the deflector.

Install or Connect

- Apply adhesive to the back of the water deflector.

1. Water deflector to door.
2. Rear door interior trim panel to vehicle; secure with fourteen plastic retaining clips (Figure 1).

Rear Door Handle

Figures 1, 6 and 7

Remove or Disconnect

1. Negative (-) battery cable.
2. Fourteen plastic retaining clips and rear door interior trim panel from vehicle (Figure 1).

- Pull water deflector away from door.

3. Two license plate lamp electrical connectors.

4. Two mounting nuts and pull license plate lamp cover away from rear door (Figure 6).

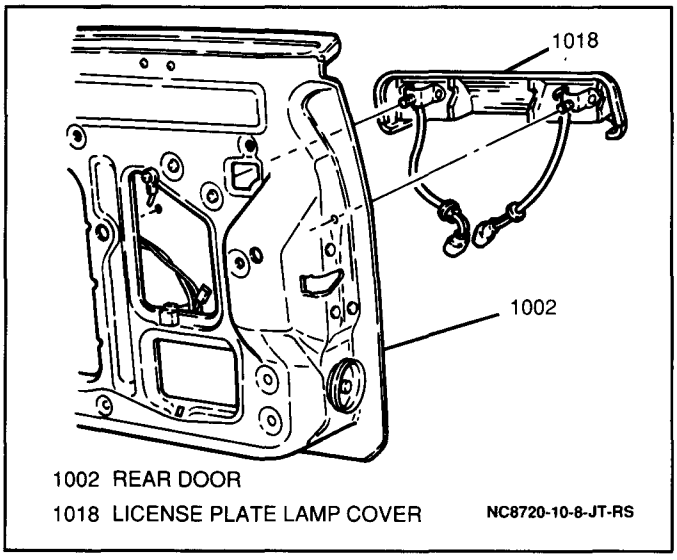

Figure 6 License Plate Lamp Cover

5. Two grommets from rear door, pull license plate lamp wiring through holes and remove license plate lamp cover from rear door.
6. Rear door handle rod from handle.
7. Two mounting nuts and rear door handle from rear door (Figure 7).

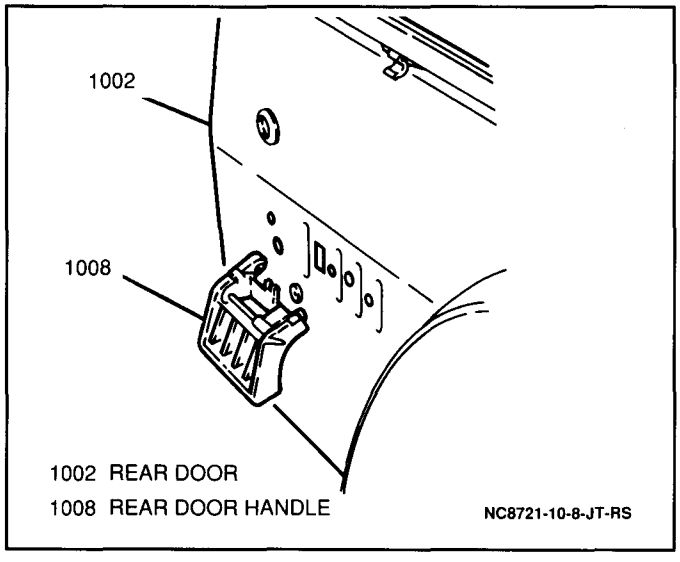

Figure 7 Rear Door Handle

Install or Connect

1. Rear door handle to rear door; secure with two mounting nuts (Figure 7).

Tighten

- Rear door handle mounting nuts to 10 N·m (89 lb.in.).

2. Rear door handle rod to handle.
- Feed license plate lamp wiring through two holes in rear door and install two grommets.
3. License plate lamp cover to rear door; secure with two mounting nuts (Figure 6).

Tighten

- License plate lamp cover mounting nuts to 10 N·m (89 lb.in.).

4. Two license plate lamp electrical connectors.

Inspect

- For tears and holes in water deflector. Repair using waterproof tape on both sides of the deflector.

- Apply adhesive to the back of the water deflector.
5. Water deflector to rear door.
6. Rear door interior trim panel to vehicle; secure with fourteen plastic retaining clips (Figure 1).
7. Negative (-) battery cable.

Tighten

- Negative (-) battery cable-to-negative (-) battery terminal retainer to 15 N·m (11 lb.ft.).

Rear Door Lock

Figures 1, 8 and 9

Remove or Disconnect

1. Fourteen plastic retaining clips and rear door interior trim panel from vehicle (Figure 1).
- Pull water deflector away from rear door.
2. Lock cylinder control rod from rear door lock.
3. Rear door handle rod from rear door lock.

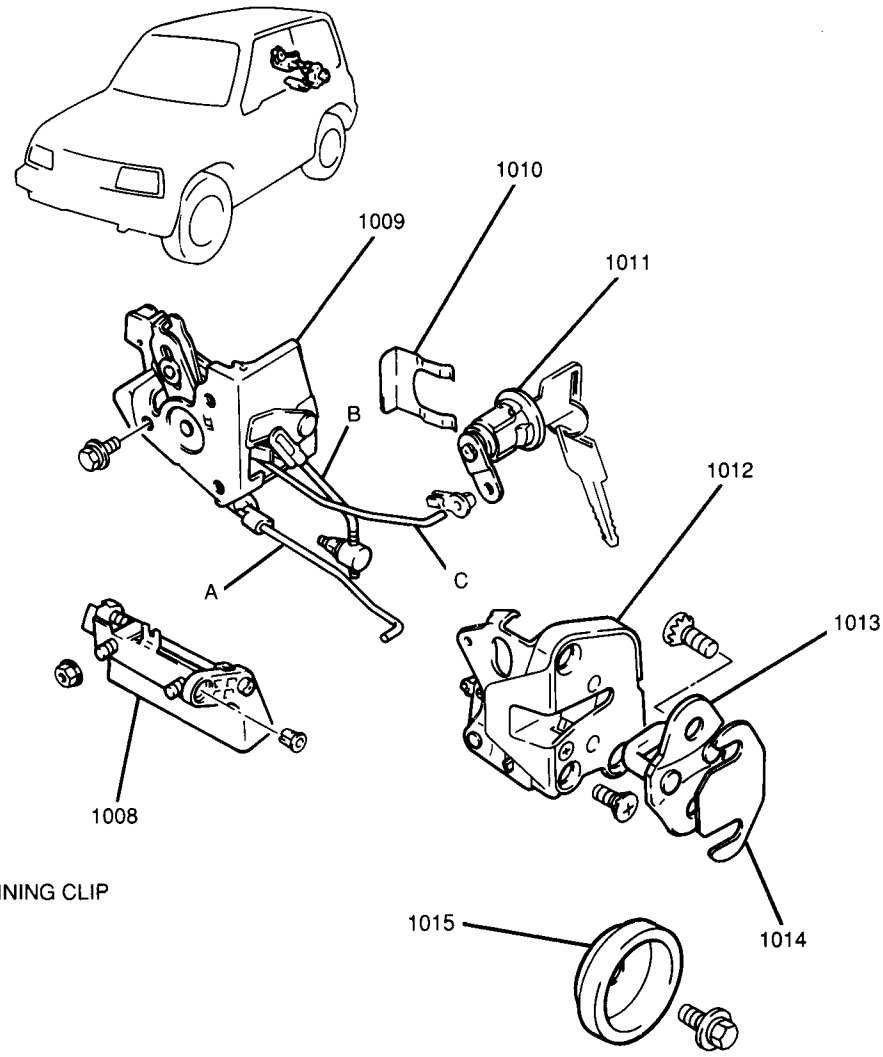

A REAR DOOR HANDLE ROD
B LOCK ASSEMBLY ROD
C LOCK CYLINDER CONTROL ROD
1008 REAR DOOR HANDLE
1009 REAR DOOR LOCK LINK
1010 REAR DOOR LOCK CYLINDER RETAINING CLIP
1011 REAR DOOR LOCK CYLINDER
1012 REAR DOOR LOCK
1013 REAR DOOR LOCK STRIKER
1014 REAR DOOR LOCK STRIKER SHIM
1015 REAR DOOR STOP

NC8715-10-8-JT-RS

Figure 8 Rear Door Lock Components

4. Three mounting screws and rear door lock from rear door (Figure 9).

Install or Connect

1. Rear door lock to rear door; secure with three mounting screws.
2. Rear door handle rod to rear door lock.
3. Lock cylinder control rod to rear door lock.

Inspect

- For tears and holes in water deflector. Repair using waterproof tape on both sides of the deflector.

- Apply adhesive to the back of the water deflector.

4. Water deflector to rear door.
5. Rear door interior trim panel to vehicle; secure with fourteen plastic retaining clips (Figure 1).

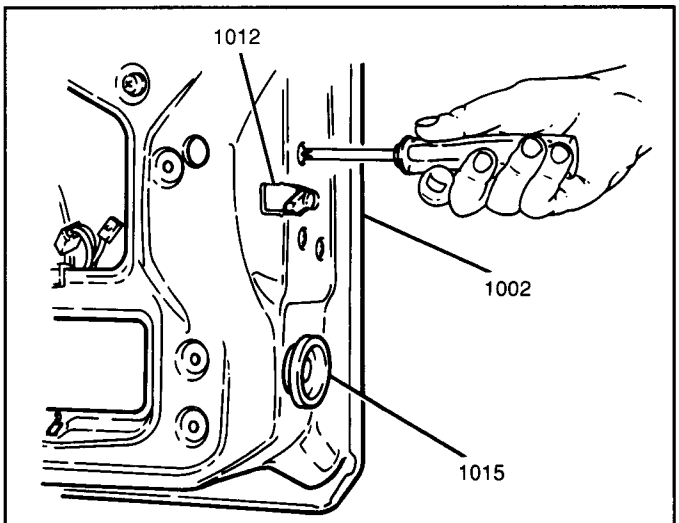

1002 REAR DOOR
1012 REAR DOOR LOCK
1015 REAR DOOR STOP

NC8716-10-8-JT-RS

Figure 9 Removing Rear Door Lock Mounting Screws

Rear Door Lock Cylinder

Figures 1 and 8

Remove or Disconnect

1. Fourteen plastic retaining clips and rear door interior trim panel from rear door (Figure 1).
   - Pull water deflector away from rear door.
2. Lock cylinder control rod from lock cylinder (Figure 8).
3. Retaining clip and lock cylinder from rear door.

Install or Connect

1. Lock cylinder to rear door; secure with retaining clip.
2. Lock cylinder control rod to lock cylinder.

Inspect

- For tears and holes in water deflector. Repair using waterproof tape on both sides of the deflector.

- Apply adhesive to the back of the water deflector.

3. Water deflector to rear door.
4. Rear door interior trim panel to rear door; secure with fourteen plastic retaining clips (Figure 1).

Rear Door Lock Striker

Figures 8, 10 and 11

Remove or Disconnect

- Mark position of lock striker on rear door jamb.
- Two screws and lock striker from rear door jamb (Figure 10).

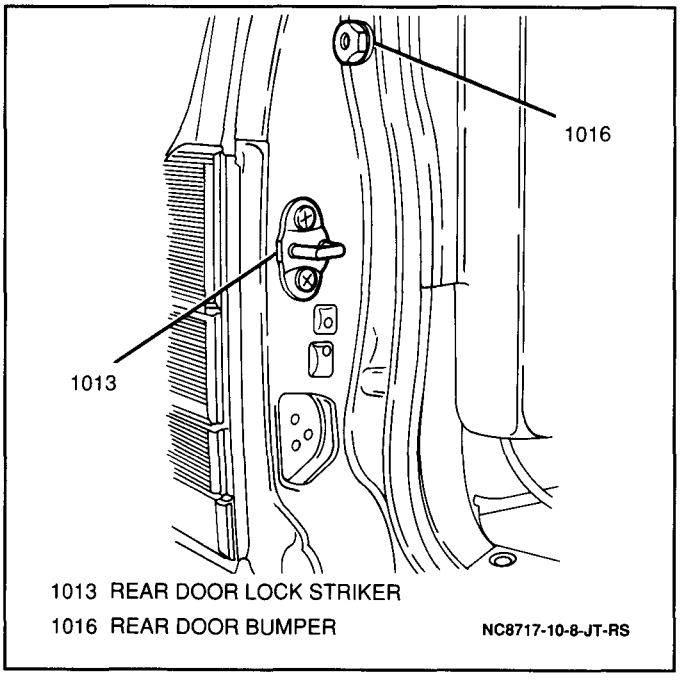

Figure 10 Rear Door Lock Striker

Install or Connect

- Lock striker to rear door jamb; secure with two screws (Figure 10).

Adjust

- Striker vertical measurement so that the striker shaft aligns with the center of the rear door lock assembly (Figure 11).

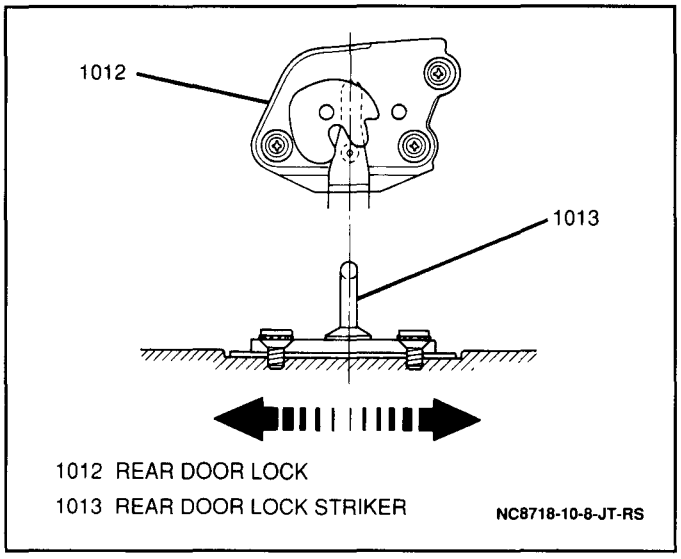

Figure 11 Rear Door Lock Striker Alignment

- Keeping striker level, move striker sideways to adjust rear door flushness with quarter panel as necessary. Refer to SECTION 10-1 for rear door flushness specifications.

Rear Door Lock Link

Figures 1 and 8

Remove or Disconnect

1. Fourteen plastic retaining clips and rear door interior trim panel from rear door (Figure 1).
   - Pull water deflector away from rear door.
2. Rear door handle rod, lock cylinder control rod and lock assembly rod from rear door lock link (Figure 8).
3. Three screws and rear door lock link from rear door.

Install or Connect

1. Rear door lock link to rear door; secure with three screws.
2. Rear door handle rod, lock cylinder control rod and lock assembly rod to rear door lock link.

Inspect

- For tears and holes in water deflector. Repair using waterproof tape on both sides of the deflector.

- Apply adhesive to the back of the water deflector.
3. Water deflector to rear door.
4. Rear door interior trim panel; secure with fourteen plastic clips (Figure 1).

Rear Door Window

Refer to SECTION 10-2 for rear door window removal and installation procedures.

Rear Door Hinges

Figures 4 and 5

Remove or Disconnect

1. Rear door from vehicle. Refer to "Rear Door" earlier in this section.
2. Three bolts and upper hinge from vehicle (Figure 5).
3. Three bolts and lower hinge from vehicle (Figure 4).

Install or Connect

1. Lower hinge to vehicle; secure with three bolts (Figure 4).

   Tighten

   - Rear door hinge-to-vehicle bolts to 34 N·m (25 lb.ft.).
2. Upper hinge to vehicle; secure with three bolts (Figure 5).

   Tighten

   - Rear door hinge-to-vehicle bolts to 34 N·m (25 lb.ft.).
3. Rear door to vehicle. Refer to "Rear Door" earlier in this section.

Rear Door License Plate Lamp Cover

Figures 1 and 6

Remove or Disconnect

1. Negative (-) battery cable.
2. Fourteen plastic retaining clips and rear door interior trim panel from vehicle (Figure 1).
- Pull water deflector away from rear door.
3. Two license plate lamp electrical connectors.
4. Two mounting nuts and pull license plate lamp cover away from rear door (Figure 6).
5. Two grommets from rear door, pull license plate lamp wiring through holes and remove license plate lamp cover from rear door.

Install or Connect

- Feed license plate lamp wiring through two holes in rear door and install two grommets.
1. License plate lamp cover to rear door; secure with two mounting nuts (Figure 6).

   Tighten

   - License plate lamp cover mounting nuts to 10 N·m (89 lb.in.).
2. Two license plate lamp electrical connectors.

   Inspect

   - For tears and holes in water deflector. Repair using waterproof tape on both sides of the deflector.
- Apply adhesive to the back of the water deflector.
3. Water deflector to rear door.
4. Rear door interior trim panel to vehicle; secure with fourteen plastic retaining clips (Figure 1).
5. Negative (-) battery cable.

   Tighten

   - Negative (-) battery cable-to-negative (-) battery terminal retainer to 15 N·m (11 lb.ft.).

Rear Door Support — Hardtop Models

Figures 2 and 12

Remove or Disconnect

1. One nut attaching rear door support to rear door (Figure 2).
2. One nut attaching rear door support to rear door opening and remove support from vehicle (Figure 2).

CAUTION: The rear door support cylinder is gas-filled and should not be disassembled. If disassembly is attempted prior to relieving the gas pressure, personal injury could result. Use the following procedure prior to discarding a support.

A. Wear safety glasses.
B. Wrap support in a clean vinyl bag.
C. Cut off corner of vinyl bag.
D. Release gas pressure by drilling a 2 to 3 mm (0.08 to 0.12-inch) hole through the vinyl bag and into the support (Figure 12).

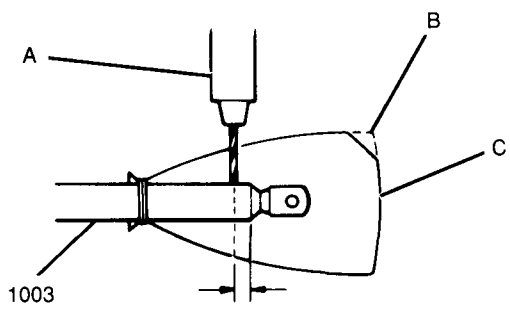

A DRILL
B CUT OFF CORNER OF VINYL BAG
C VINYL BAG
1003 REAR DOOR SUPPORT
NC8005-10-8-JT-RS

Figure 12 Discarding Rear Door Support

Install or Connect

- Rear door support to vehicle; secure with two nuts (connect to rear door opening first, Figure 2).

Tighten

- Rear door support nuts to 15 N·m (11 lb.ft.).

Rear Door Stop

Figure 13

Remove or Disconnect

- One mounting bolt and rear door stop from rear door (Figure 13).

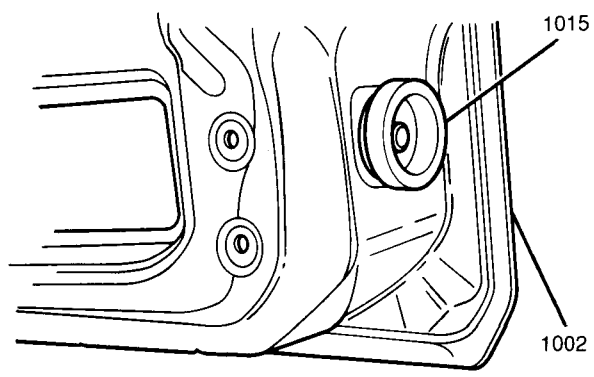

1002 REAR DOOR
1015 REAR DOOR STOP
NC8719-10-8-JT-RS

Figure 13 Rear Door Stop

Install or Connect

- Rear door stop to rear door; secure with one mounting bolt (Figure 13).

Tighten

- Rear door stop mounting bolt to 20 N·m (15 lb.ft.).

SPARE TIRE CARRIER

Figure 14

Remove or Disconnect

1. Spare tire cover.
2. Tire lock, three wheel nuts and spare tire from rear door.
3. Four mounting bolts (hardtop models, six bolts on convertible models) and spare tire carrier from vehicle (Figure 14).

Install or Connect

1. Spare tire carrier to vehicle; secure with four mounting bolts (hardtop models, six bolts on convertible models, Figure 14).

Tighten

- Spare tire carrier mounting bolts to 45 N·m (33 lb.ft.).

2. Spare tire to rear door; secure with three wheel nuts and one tire lock.

Tighten

- Spare tire wheel nuts to 54 N·m (40 lb.ft.)

3. Spare tire cover.

TRAILER HITCH DRAW BAR

Figure 15

Remove or Disconnect

1. Four mounting bolts and trailer hitch draw bar from vehicle frame (Figure 15).
2. One mounting bolt and trailer hitch ball from trailer hitch draw bar (if necessary).

Install or Connect

1. Trailer hitch ball to trailer hitch draw bar; secure with one mounting bolt (if removed).

Tighten

- Trailer hitch ball mounting bolt to 95 N·m (70 lb.ft.).

2. Trailer hitch draw bar to vehicle frame; secure with four mounting bolts (Figure 15).

Tighten

- Trailer hitch draw bar mounting bolts to 70 N·m (51 lb.ft.).

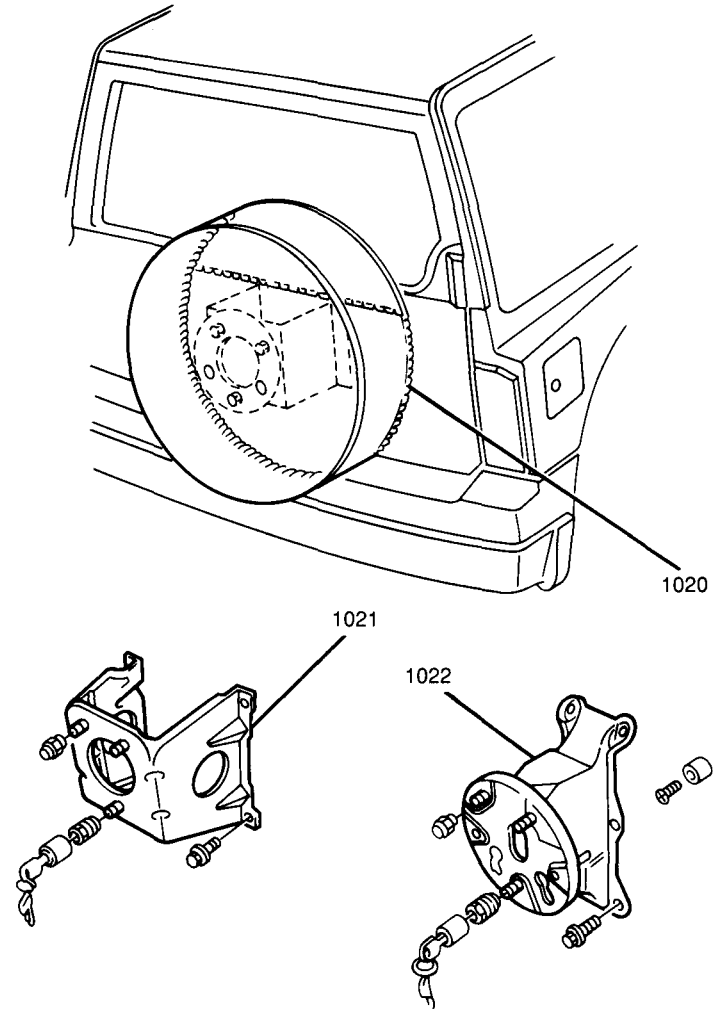

1020 SPARE TIRE COVER
1021 SPARE TIRE CARRIER – HARDTOP MODELS
1022 SPARE TIRE CARRIER – CONVERTIBLE MODELS

NC8722-10-8-JT-RS

Figure 14 Spare Tire Carrier

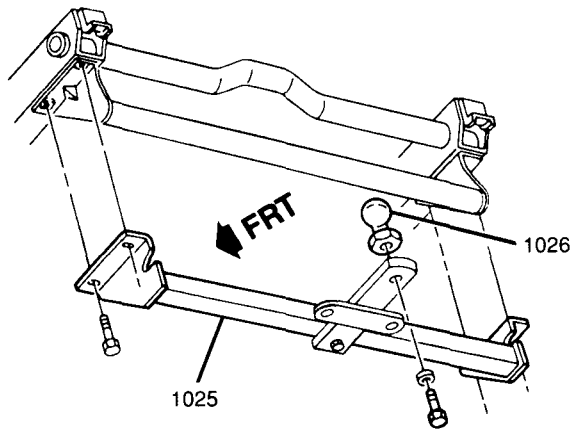

1025 TRAILER HITCH DRAW BAR
1026 TRAILER HITCH BALL

NC8723-10-8-JT-RS

Figure 15 Trailer Hitch Draw Bar

SPECIFICATIONS

FASTENER TORQUES

License Plate Lamp Cover Mounting Nuts	10 N·m (89 lb.in.)
Negative (-) Battery Cable-to-Negative (-) Battery Terminal Retainer	15 N·m (11 lb.ft.)
Rear Door Hinge-to-Rear Door Bolts	34 N·m (25 lb.ft.)
Rear Door Hinge-to-Vehicle Bolts	34 N·m (25 lb.ft.)
Rear Door Handle Mounting Nuts	10 N·m (89 lb.in.)
Rear Door Stop Mounting Bolts	20 N·m (15 lb.ft.)
Rear Door Support Nuts	15 N·m (11 lb.ft.)
Spare Tire Carrier Mounting Bolts	45 N·m (33 lb.ft.)
Spare Tire Wheel Nuts	54 N·m (40 lb.ft.)
Trailer Hitch Ball Mounting Bolt	95 N·m (70 lb.ft.)
Trailer Hitch Draw Bar Mounting Bolts	70 N·m (51 lb.ft.)

SERVICE PARTS INFORMATION

Component Name Used in Section 10-8	Reference Name in Service Parts Catalog	Group Number
Rear Door (Hardtop Models)	Panel Asm, Back Door	17.185
Rear Door (Convertible Models)	Panel Asm, Back Door Exterior	17.185
Rear Door Lower Hinge	Hinge, Back Door Lower	17.208
Rear Door Upper Hinge	Hinge, Back Door Upper	17.208
Rear Door Support (Hardtop Models)	Balancer Unit, Back Door Unit	17.202
Rear Door Lock	Latch Asm, Rear Door	17.198
Rear Door Lock Cylinder	Cylinder Kit, Rear Door Latch Lock	17.198
Rear Door Lock Striker	Striker, Rear Door Latch	17.198
Rear Door Lock Link	Link, Rear Door Latch	17.202
Rear Door Stop	Stop, Rear Door	17.202
Rear Door Handle	Handle, Rear Door Outer	17.204
Rear Door License Plate Lamp Cover	Cover, Back Door License Lamp	2.705
Spare Tire Carrier (Hardtop Models).	Carrier, Spare Wheel.	7.629
Spare Tire Carrier (Convertible Models)	Carrier, Spare Wheel	7.629
Rear Door Interior Trim Panel	Trim, Back Door Panel Interior	17.185
Rear Door Water Deflector	Cover, Back Door Sealing	17.185
Trailer Hitch Draw Bar	Bracket Asm, Trailer Hitch Draw Bar	7.068
Trailer Hitch Ball	Ball Pkg, Trailer Hitch	21.250

SECTION 10-9

ROOF AND FOLDING TOP

NOTICE: When fasteners are removed, always reinstall them at the same location from which they were removed. If a fastener needs to be replaced, use the correct part number fastener for that application. If the correct part number fastener is not available, a fastener of equal size and strength (or stronger) may be used. Fasteners that are not reused, and those requiring thread-locking compound, will be called out. The correct torque values must be used when installing fasteners that require them. If the above procedures are not followed, parts or system damage could result.

CONTENTS

On-Vehicle Service 10-9-1
Headlining 10-9-1
Sunshades 10-9-3
Interior Lighting 10-9-3
Dome Lamp 10-9-3
Inside Rearview Mirror 10-9-3
Folding Top 10-9-5
Operation 10-9-5
Maintenance 10-9-7
Watertest and Waterleak Procedures 10-9-7
Folding Top Material 10-9-8
Folding Top Latch 10-9-12
Rear Window 10-9-12
Roof Bows 10-9-12
Specifications 10-9-13
Fastener Torques 10-9-13
Service Parts Information 10-9-13

ON-VEHICLE SERVICE

HEADLINING

Figures 1 through 5

Remove or Disconnect

1. Negative (-) battery cable.
- Slide inside rearview mirror trim bezel off mirror (Figure 1).

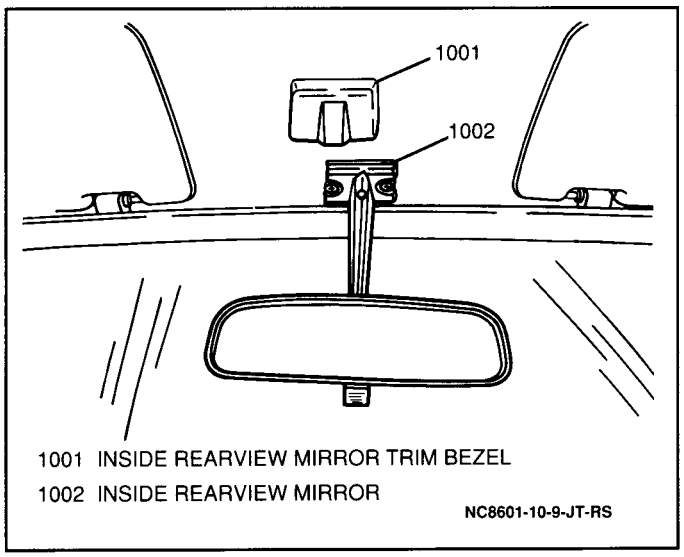

Figure 1 Inside Rearview Mirror

2. Two screws and inside rearview mirror from vehicle (Figure 1).
3. One screw from each sunshade support and supports from vehicle (Figure 2).

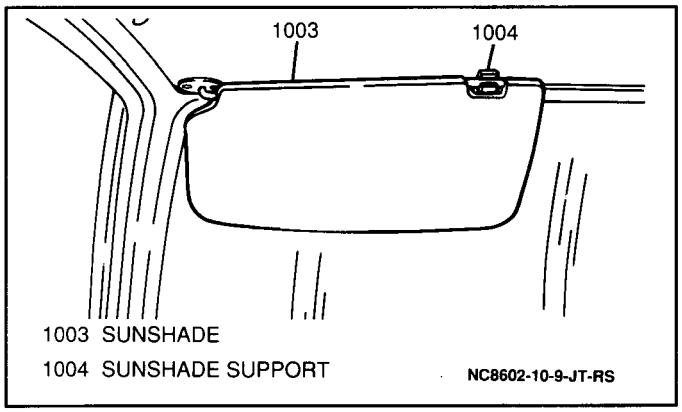

Figure 2 Sunshade

4. Two screws from each sunshade and sunshades from vehicle.
- Pull dome lamp lens off dome lamp (Figure 3).

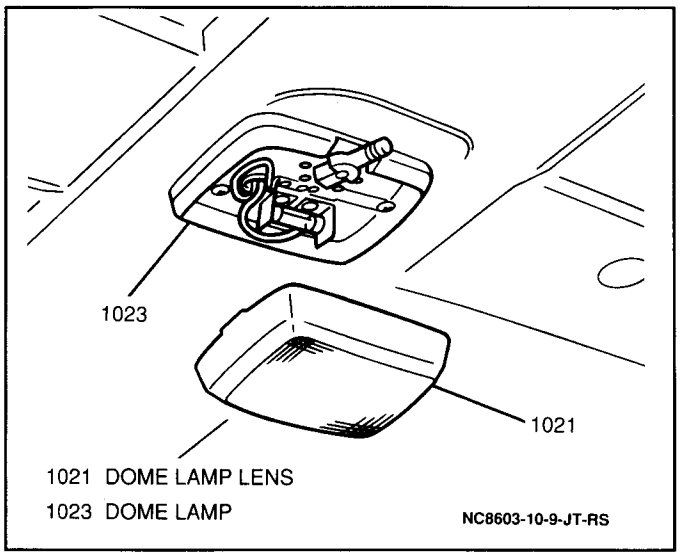

Figure 3 Dome Lamp

5. Two screws and lower dome lamp from roof.
6. Dome lamp electrical connector and remove dome lamp from vehicle.
7. Two screws from each assist handle and assist handles from vehicle (Figure 4).

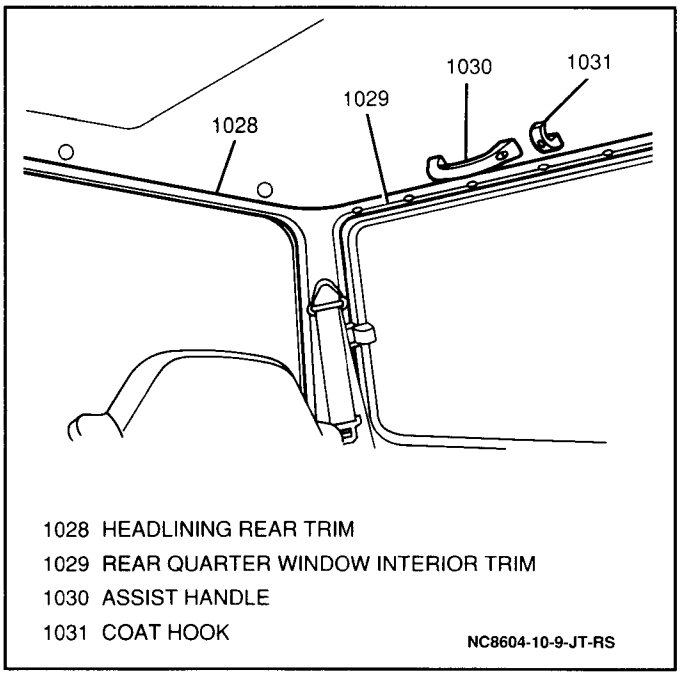

Figure 4 Headlining Trim and Hardware

8. One screw and coat hook from vehicle (Figure 4).
- Loosen door opening finishing lace along both A-pillar trim panels.
- Gently pry both A-pillar trim panels loose and remove from vehicle.
- Gently pry the headlining front trim loose and remove from vehicle.
- Open rear quarter window.

9. Two screws from rear quarter window latch.
- Pull quarter window weatherstrip from body.

10. Front and rear seat belt guide loop anchor bolts.
- Loosen rear door opening weatherstrip along rear quarter window interior trim and headlining rear trim (Figure 5).

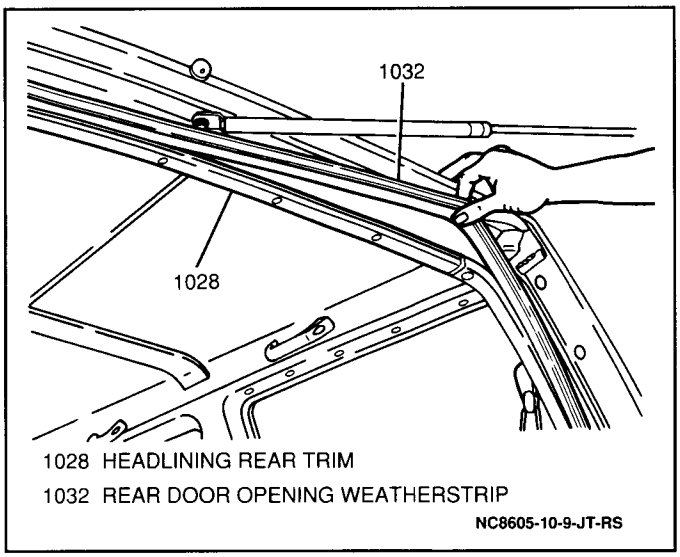

Figure 5 Rear Door Opening Weatherstrip

- Loosen front door opening weatherstrip.

11. Six plastic clips and rear quarter window interior trim from vehicle.
12. Five plastic clips and headlining rear trim from vehicle (Figure 5).
13. Seven plastic clips and headlining from vehicle.

Install or Connect

1. Headlining to vehicle; secure with seven plastic clips.
2. Headlining rear trim to vehicle; secure with five plastic clips.
3. Rear quarter window interior trim; secure with six plastic clips.
- Press front door opening weatherstrip into place.
- Press rear door opening weatherstrip into place.

4. Front and rear seat belt guide loop anchor bolts.

Tighten

- Front and rear seat belt guide loop anchor bolts to 45 N·m (33 lb.ft.).

5. Rear quarter window weatherstrip to body; press into place.
6. Rear quarter window latch to vehicle; secure with two screws.
- Close rear quarter window.

7. Headlining front trim to vehicle; press into place.
8. A-pillar trim panels to vehicle; press into place.
- Press door opening finishing lace into place along both A-pillar trim panels.

9. Coat hooks to vehicle; secure each with one screw (Figure 4).
10. Assist handles to vehicle; secure each with two screws (Figure 4).
11. Dome lamp electrical connector.
12. Dome lamp to roof; secure with two screws.
13. Dome lamp lens to dome lamp (Figure 3).

14. Sunshades to vehicle; secure each with two screws (Figure 2).
15. Sunshade supports to vehicle; secure each with one screw (Figure 2).
16. Inside rearview mirror to vehicle; secure with two screws (Figure 1).
- Slide inside rearview mirror trim bezel onto mirror (Figure 1).

17. Negative (-) battery cable.

Tighten

- Negative (-) battery cable-to-negative (-) battery terminal retainer to 15 N·m (11 lb.ft.).

SUNSHADES

Figure 2

Remove or Disconnect

1. One screw from each sunshade support and supports from vehicle (Figure 2).
2. Two screws from each sunshade and sunshades from vehicle (Figure 2).

Install or Connect

1. Sunshades to vehicle; secure each with two screws (Figure 2).
2. Sunshade supports to vehicle; secure each with one screw (Figure 2).

INTERIOR LIGHTING

Dome Lamp

The dome lamp is mounted on the headlining between the front seats. Refer to SECTION 8B for dome lamp service procedures.

INSIDE REARVIEW MIRROR

Figure 1

Remove or Disconnect

- Slide inside rearview mirror trim bezel from mirror (Figure 1).

1. Two screws and inside rearview mirror from vehicle (Figure 1).

Install or Connect

1. Inside rearview mirror to vehicle; secure with two screws (Figure 1).
- Slide inside rearview mirror trim bezel onto mirror (Figure 1).

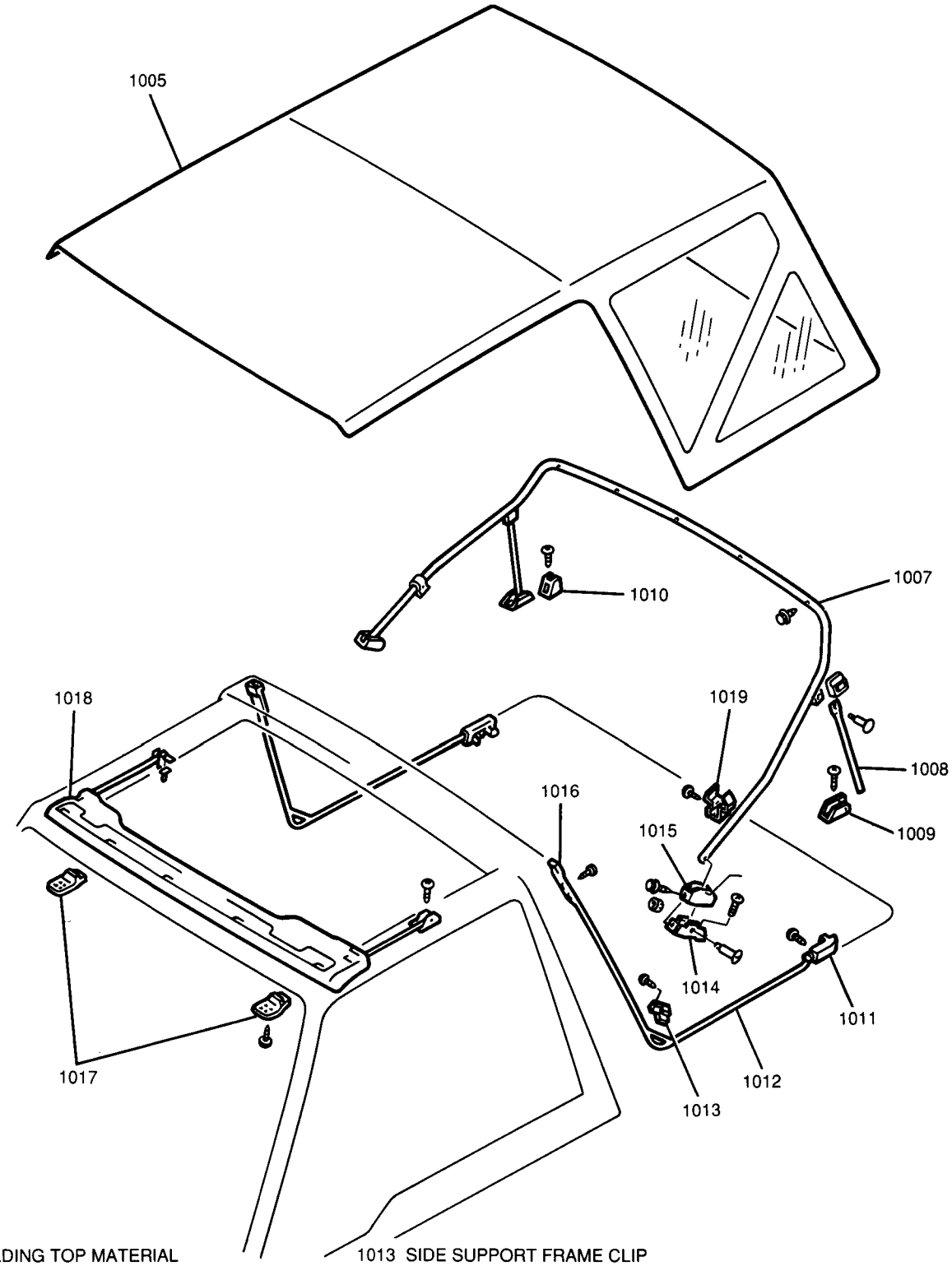

1005 FOLDING TOP MATERIAL
1007 REAR TOP BOW
1008 REAR TOP BOW STRUT
1009 REAR TOP BOW STRUT BRACKET
1010 RUBBER STOPPER
1011 SIDE SUPPORT FRAME LOWER BRACKET
1012 SIDE SUPPORT FRAME
1013 SIDE SUPPORT FRAME CLIP
1014 REAR TOP BOW PIVOT BRACKET
1015 REAR TOP BOW PIVOT BRACKET COVER
1016 SIDE SUPPORT FRAME UPPER BRACKET
1017 FOLDING TOP LATCH
1018 FRONT TOP BOW
1019 REAR TOP BOW STRUT RETAINING CLAMP

NC7509-10-9-JT-RS

Figure 6 Folding Top Assembly

FOLDING TOP

Operation

Opening the Folding Top

Figures 6 through 11

CAUTION: The folding top is provided only to offer some protection against undesirable weather conditions. It is not designed to hold occupants inside the vehicle or to protect against the intrusion of foreign objects in the event of an accident. Occupants should wear seat belts whenever traveling in this vehicle.

CAUTION: Never attempt to open the folding top while driving. You may lose control of the vehicle or may damage the folding top.

CAUTION: Never stand in the vehicle while driving. Occupants who are not properly restrained can be severely injured in case of a sudden maneuver or an accident.

CAUTION: To avoid possible personal injury and/or damage to the folding top, make sure that the front of the folding top is securely locked to the windshield header or the folding top is completely opened before driving.

NOTICE: The following circumstances may be damaging to the folding top:

- Opening or closing the top when the temperature is below 5°C (41°F).
- Taking the vehicle through an automatic car wash.
- Driving the vehicle when the top is not fully closed or fully open.
- Opening the folding top when it is wet. Water trapped in the folding top may cause stains, mildew and damage to the inside of the vehicle.
- Opening the folding top when the rear flap or side windows are dirty. Dirt could scratch the side windows.
- Sitting on or putting excessive weight on the folding top.

1. Remove folding top material from vehicle. Refer to "Folding Top Material" later in this section.
2. Place the folding top material on a clean, flat surface with the inside facing up.

Clean

- Folding top material and the rear window before rolling to prevent scratching.

3. Fold the folding top material (Figure 7).

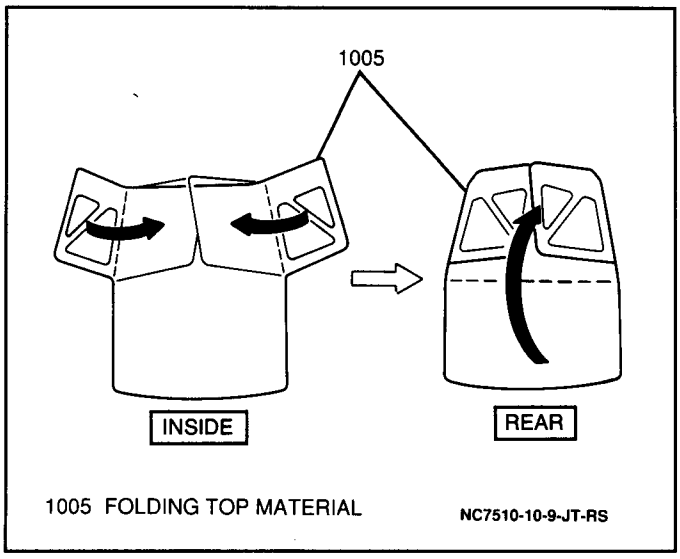

Figure 7 Folding the Folding Top Material For Storage

4. Roll rear window (Figure 8).

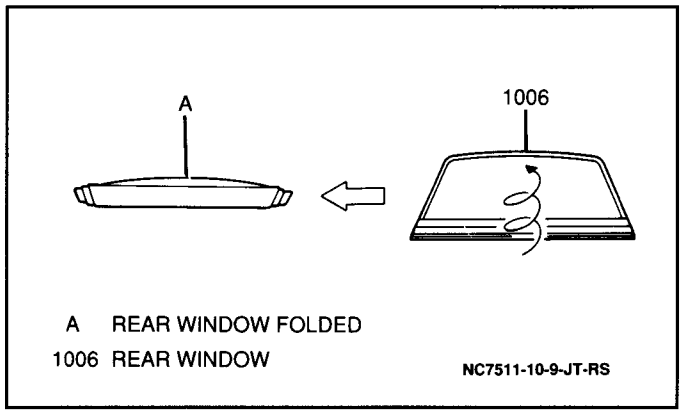

Figure 8 Rolling the Rear Window

5. Roll rear window into folding top material (Figure 9).

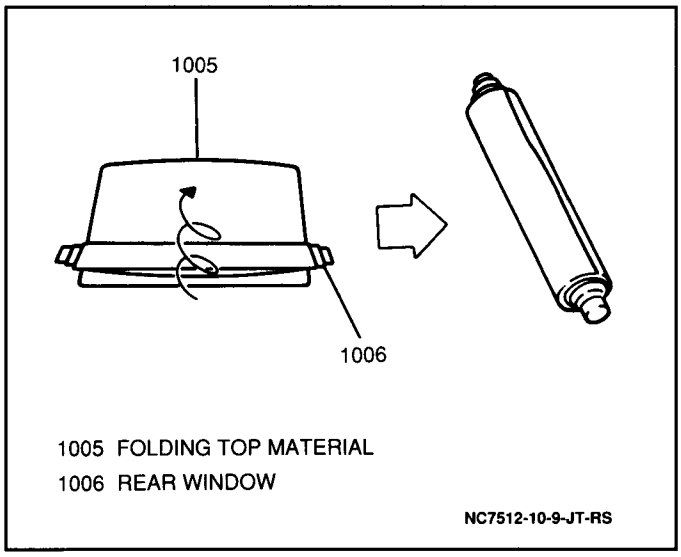

Figure 9 Rolling Rear Window Into Folding Top Material

6. Pull up and back on the rear top bow struts and remove them from the rear top bow strut brackets (Figure 10).

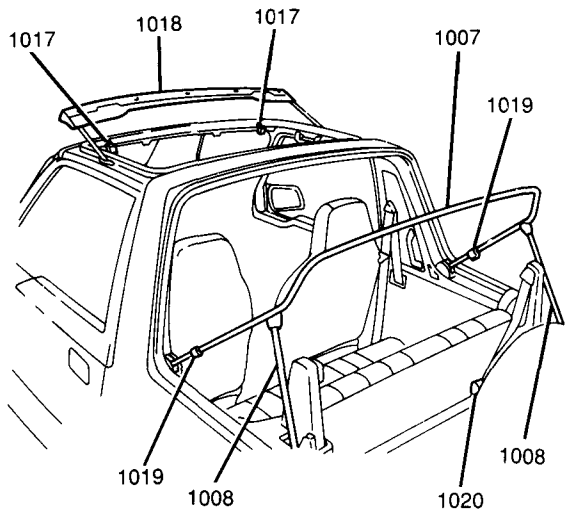

1007 REAR TOP BOW
1008 REAR TOP BOW STRUT
1017 FOLDING TOP LATCH
1018 FRONT TOP BOW
1019 REAR TOP BOW STRUT RETAINING CLAMP
1020 REAR TOP BOW RETAINING STRAP

NC7508-10-9-JT-RS

Figure 10 Rear Top Bow

7. Swing each strut forward and clip rear top bow struts into retaining clamps.

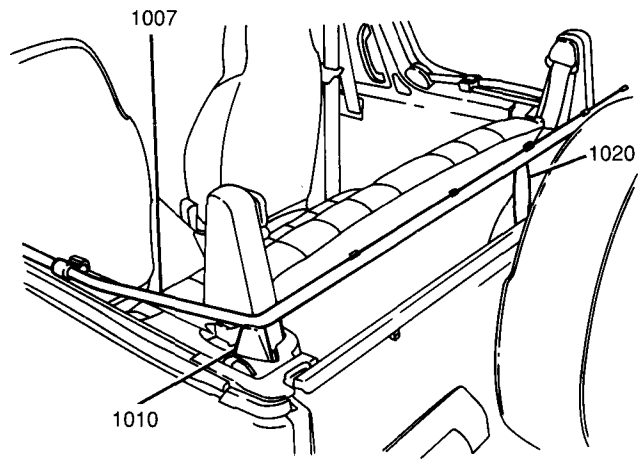

1007 REAR TOP BOW
1010 RUBBER STOPPER
1020 REAR TOP BOW RETAINING STRAP

NC7507-10-9-JT-RS

Figure 11 Securing Rear Top Bow to Rear Door

8. Fold rear top bow down and secure it to rear door with retaining strap (Figure 11).
9. Move front top bow forward and hook to folding top latches; push latches down until they click.

Closing the Folding Top

Figures 10 and 11

1. Push in folding top latch buttons, pull latch back and unhook latch from front top bow.
2. Lift front top bow.
3. Unsnap retaining strap and lift rear top bow from rear door (Figure 11).
4. Unclip rear top bow struts from retaining clamps, swing rearward and lock them into their upright position (Figure 10).
5. Unroll folding top material and rear window.
6. Install folding top material to vehicle. Refer to "Folding Top Material" later in this section.

Maintenance

Cleaning the Folding Top

Wash the folding top often with vinyl top cleaner GM P/N 1050729, or equivalent, or leather/vinyl/upholstery (multi-purpose) cleaner GM P/N 1050429, or equivalent. Follow the cleaner manufacturer's instructions when using any of these products. When washing the folding top, use a brush with soft bristles so as not to damage the folding top material. Rinse the top with plenty of clean water to remove all traces of the cleaning agent. Do not use volatile type cleaners or household bleaching agents on the folding top material.

NOTICE: Be sure to keep cleaning solution from running down onto the body of the vehicle. It could cause streaks and may damage the paint finish. Be sure that the folding top is dry before lowering it into place. A damp top can become wrinkled. Trapped water can cause stains and mildew, and it may damage the inside of the vehicle.

Cleaning Plastic Rear Window

The rear window is made of a very pliable plastic material that can be scratched easily. Listed are a series of precautions you should take to help prevent the rear window from sustaining damage.

- To wipe off dust, use a soft cotton cloth moistened with clean lukewarm or cold water. Move the cloth in one direction without stopping. Never use a dry cloth.
- To remove frost, snow or ice, use lukewarm water without using a scraper or de-icing chemicals.
- To wash the rear window, be sure to use lukewarm or cold water. Do not use hot water or any strong soap or detergents. Never use solvents such as alcohol or harsh cleaning agents. After a thorough rinse, wipe with a soft and slightly moist, clean cloth.
- Never paste stickers, gummed labels or any tape to the rear window. It is very hard to remove adhesives left on the rear window after removing stickers and labels. Removing such adhesives forcibly or with solvents may damage the rear window. If adhesives on the rear window are still soft and sticky, they may be removed by repeated sticking-and-removing action with another new sticker or tape.

Watertest and Waterleak Procedures

Figure 12

General Motors vehicles are designed to operate under normal environmental conditions. The design criteria for sealing materials and components takes into consideration the sealing forces required to withstand the natural elements. These specifications do not, and cannot, take into consideration all artificial conditions (i.e., high pressure car washes).

The watertest procedure has been correlated to the natural elements and will determine the ability of a car to perform under normal operating conditions.

Repairing body waterleaks is a result of proper testing, diagnosis, and repair through adjustment of misaligned components and/or application of proven repair materials. The first step in waterleak diagnosis is finding the conditions under which the leak occurs (for example, leak noticed only when parked on an inclined drive or water in spare tire compartment).

If the general leak area can be found, the exact entry point can be quickly isolated by the use of a localized test such as a water hose or air hose. If the leak source is not obvious, the generalized testing method using water equipment such as the watertest stands should be used (Figure 12). It may be necessary to remove some interior trim panels or components to locate leaks and confirm repairs.

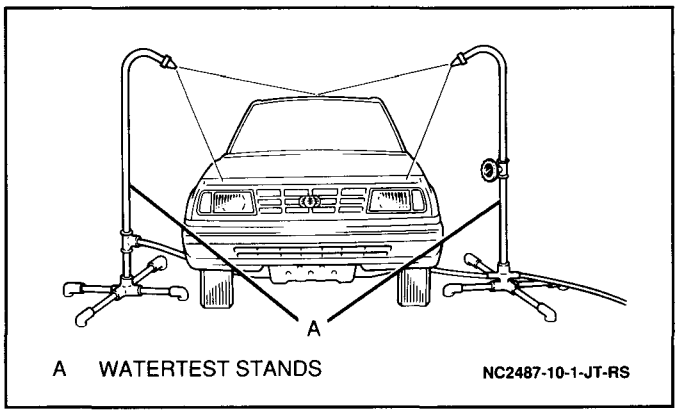

Figure 12 Watertest Stands Positioned For Testing

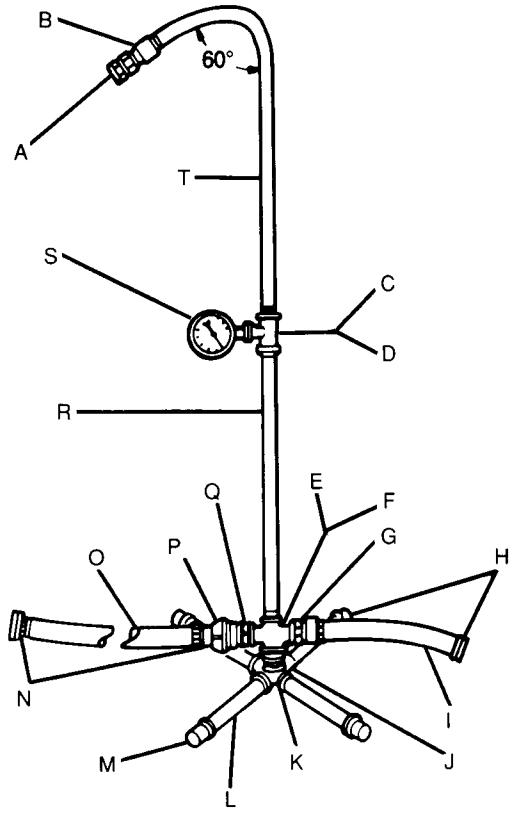

A	FULL-JET SPRAY NOZZLE #1/2 GG-25 OR EQUIVALENT NOZZLE HEIGHT-64" TO FLOOR
B	1/2" COUPLING
C	1/2" X 1/2" X 1/4" REDUCING TEE (RIGHT ONLY)
D	1/2" COUPLING (LEFT ONLY)
E	1/2" CROSS (RIGHT ONLY)
F	1/2" TEE (LEFT ONLY)
G	1/2" PIPE TO HOSE NIPPLE (RIGHT ONLY)
H	5/8" FEMALE HOSE COUPLING
I	2' INPUT HOSE (5/8" DIA.) RIGHT ONLY
J	1/2" CLOSE NIPPLE
K	1/2" CROSS WITH WELD-ON 1/2" CAP
L	1/2" X 12" NIPPLE
M	1/2" CAP
N	5/8" FEMALE HOSE COUPLING
O	12' CROSS HOSE (5/8" DIA.)
P	HOSE QUICK CONNECT
Q	1/2" PIPE TO HOSE NIPPLE
R	1/2" X 30" PIPE (STRAIGHT)
S	WATER PRESSURE GAGE (RIGHT SIDE)
T	1/2" X 36" PIPE

NC1150-10-9-M-RS

Figure 13 Watertest Stand Specifications

Generalized Testing

Figure 13

Specifications for construction of the watertest stand are shown in Figure 13.

If the specified water pressure of 155 kPa (22 psi) cannot be obtained because of a local situation, both test stands may be moved toward the vehicle body until water spray overlap can be obtained.

Localized Testing (Spot Test)

Localized testing may be made with either water or air. Begin the test at the base of the suspected area and continue upward slowly until the leak is located.

Important

- Pinpoint the leak area before any repair is made. Random repair may only temporarily restrict water entry and make future diagnosis and repair more difficult.

Continue localized testing in the same general area to confirm that all leaks have been located.

Water Hose Test

- Have another technician inside the vehicle to detect the actual point of entry.
- Use unrestricted water flow (no nozzle).
- Begin at base of suspected waterleak area and move upward slowly.

Air Hose Test

- Apply bubble solution (liquid soap) to suspected leak area.
- Apply air pressure with an air hose from inside the vehicle. Do not exceed 205 kPa (30 psi).
- Watch for outside bubbles at suspected leak area.

Waterleak Repair

To locate the precise location of the leak or to repair the leak, it may be necessary to remove some interior trim panels or components.

After completion of any waterleak repair, the general area should be retested using the watertest stand. Do not use an air hose or water hose to test repaired areas as the repair material may dislodge under abnormal pressure.

Folding Top Material

Figures 6 and 14 through 24

Remove or Disconnect

- Unfasten the corner flap of the folding top on the lower left side of rear door to uncover the zipper pull ring.
- Unfasten the corner flap of the folding top on the lower right side of the rear door.

- Unclip rear window frame from rear door at three places (Figure 14).

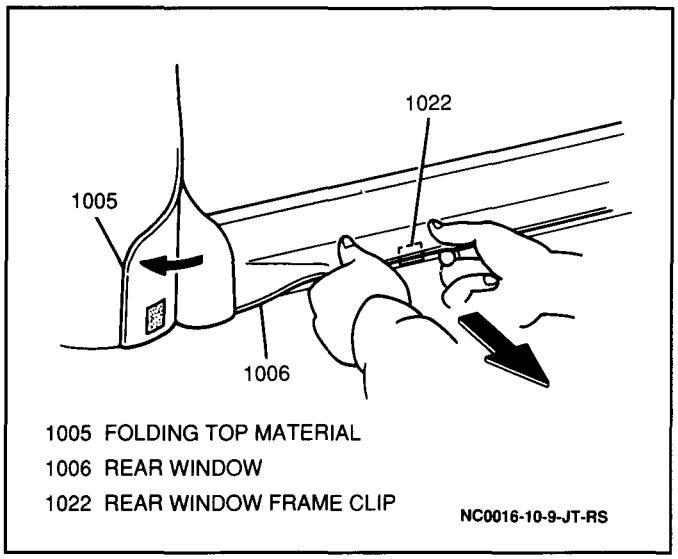

Figure 14 Removing Rear Window Frame From Clips

- Unzip rear window from folding top and remove rear window from vehicle (Figure 15).

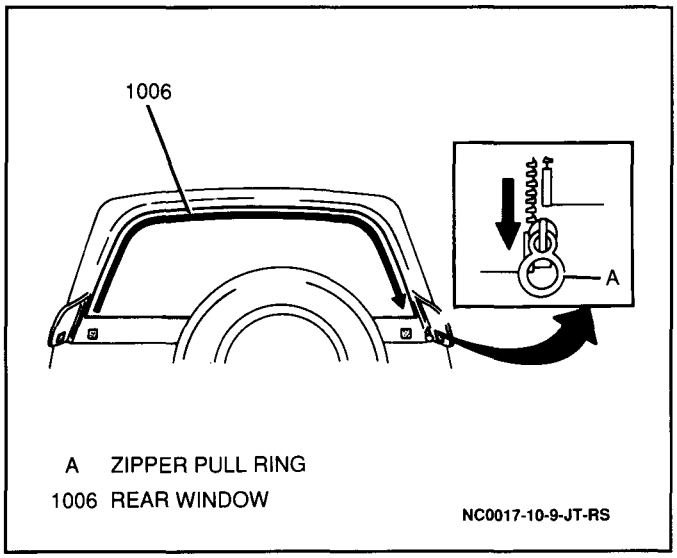

Figure 15 Rear Window Zipper

- Place rear window on a clean, flat surface with the inside facing up.

- Unfasten straps securing side support frames to the rear top bow (Figure 16).

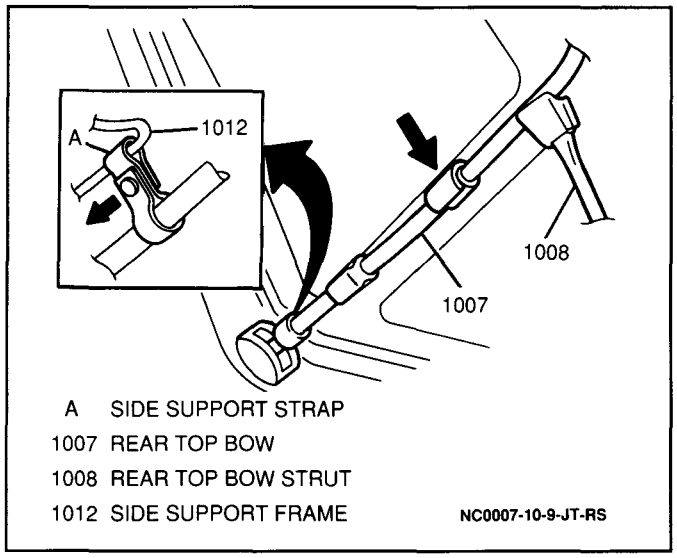

Figure 16 Unfastening Side Support Frame-to-Rear Top Bow Straps

- Unclip side support frames from body by pushing them outward from inside the vehicle (Figure 17).

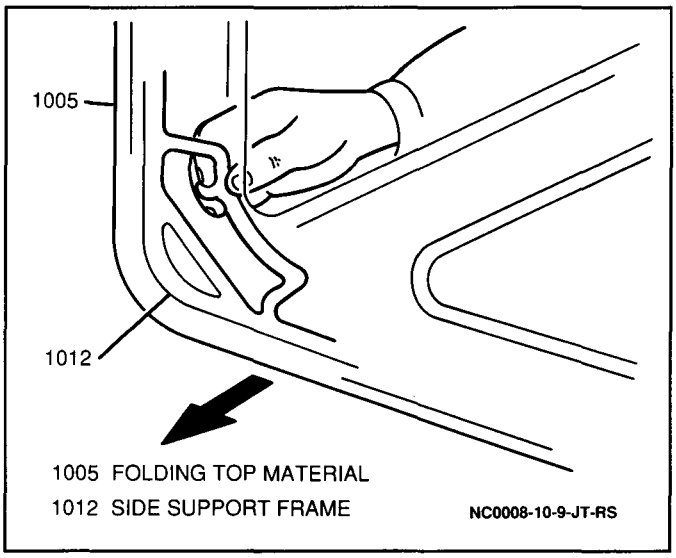

Figure 17 Unclipping Side Support Frames From Vehicle

- Unfasten folding top material from side support frames (Figure 18).

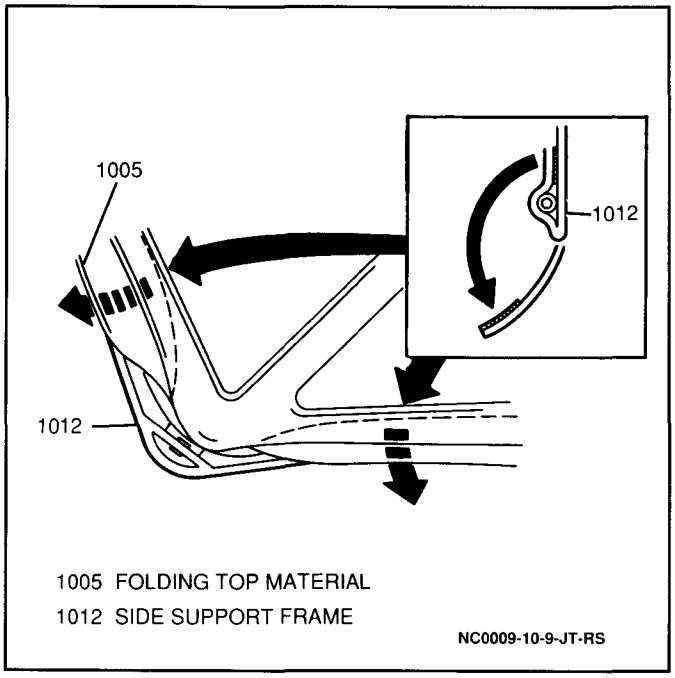

Figure 18 Removing Folding Top Material From Side Support Frame

- Clip side support frames back into place after removing folding top material from them.
- Unsnap tension straps from roof rails and pull them out of the plastic loops (Figure 19).

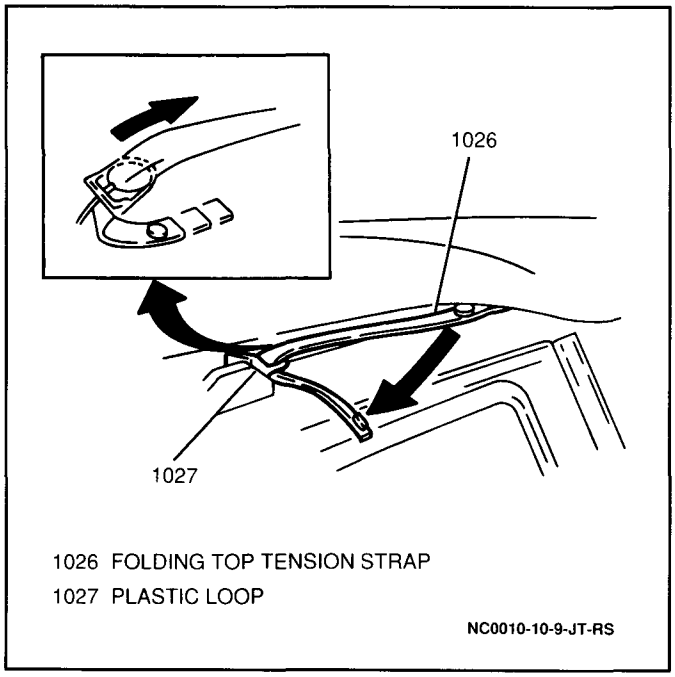

Figure 19 Unfastening Folding Top Tension Strap

- Unsnap flaps from roof support, near dome lamp (Figure 20).

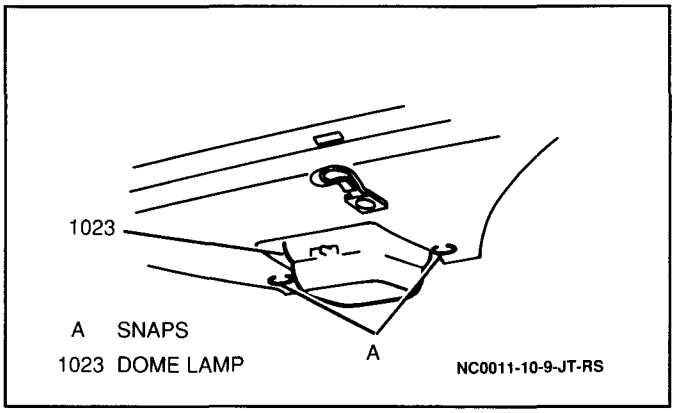

Figure 20 Unfastening Folding Top Snaps From Roof Support

- Push in folding top latch buttons, pull latch back and unhook latch from front top bow (Figure 21).

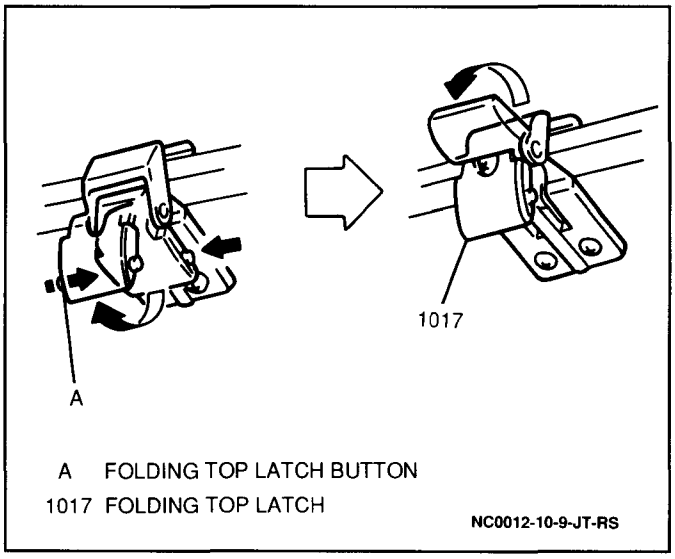

Figure 21 Folding Top Latches

- Lift front top bow.

- Unhook folding top material from front top bow (Figure 22).

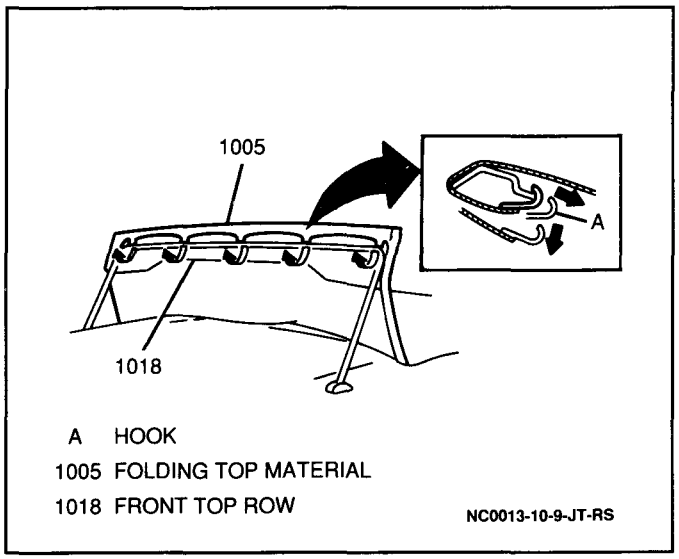

Figure 22 Removing Folding Top Material From Front Top Bow

- Slide rear corner frame brackets away from body (Figure 23).

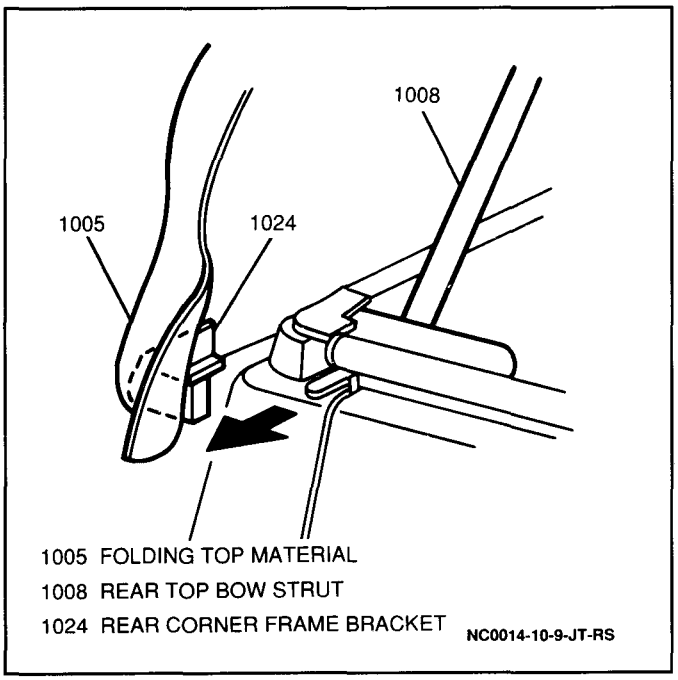

Figure 23 Removing Rear Corner Frame Brackets

- Unsnap the folding top material from the rear top bow (Figure 24).

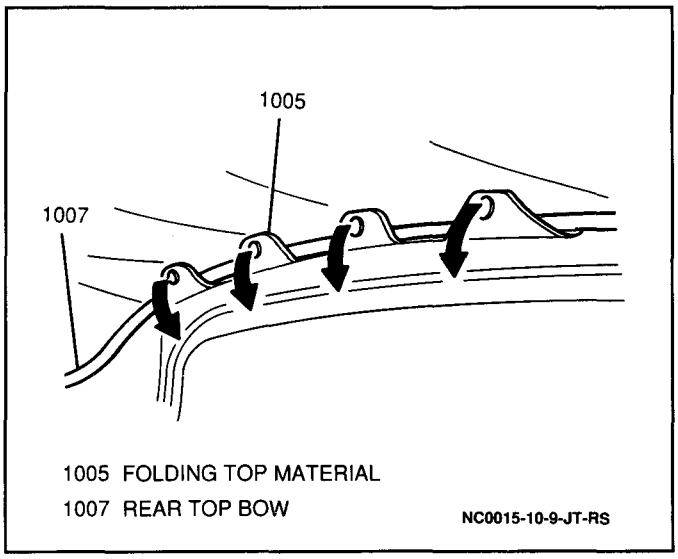

Figure 24 Removing Folding Top Material From Rear Top Bow

- Folding top material from vehicle.

Install or Connect

1. Folding top material to vehicle.
- Snap folding top material to rear top bow.
2. Rear corner frame brackets.
- Hook folding top material to front top bow.
- Move front top bow forward and hook to folding top latches; push latches down until they click (Figure 21).
- Snap flaps to roof support, near dome lamp.
- Pull tension straps through plastic loops and snap to roof rails.
- Unclip side support frames from body by pushing them outward from inside the vehicle (Figure 17).
- Fasten folding top material to side support frames.
- Clip side support frames back into place.
- Fasten straps securing side support frames to the rear top bow.
3. Rear window to folding top; zip into place.
- Clip rear window frame to rear door at three places.
- Fasten the folding top corner flaps on the lower right and left sides of the rear door.

Folding Top Latch

Figure 21

Remove or Disconnect

- Push in folding top latch buttons, pull latch back and unhook latch from front top bow (Figure 21).
- Two screws and folding top latch from vehicle.

Install or Connect

- Folding top latch to vehicle; secure with two screws.
- Move front top bow forward and hook to folding top latch; push latch down until it clicks (Figure 21).

Rear Window

Figures 14 and 15

Remove or Disconnect

- Unfasten the corner flap of the folding top on the lower left side of rear door to uncover the zipper pull ring.
- Unfasten the corner flap of the folding top on the lower right side of the rear door.
- Unclip rear window frame from rear door at three places (Figure 14).
- Unzip rear window from folding top and remove rear window from vehicle (Figure 15).

Install or Connect

- Rear window to folding top; zip into place (Figure 15).
- Clip rear window frame to rear door at three places (Figure 14).
- Fasten the folding top corner flaps on the lower right and left sides of the rear door.

Roof Bows

Front Top Bow

Figures 6, 19, 21 and 22

Remove or Disconnect

- Push in folding top latch buttons, pull latch back and unhook latch from front top bow (Figure 21).
- Lift front top bow.
- Unhook folding top material from front top bow (Figure 22).
- Unsnap tension straps from roof rails and pull them out of the plastic loops (Figure 19).
- Four screws and front top bow from vehicle.

Install or Connect

- Front top bow to vehicle; secure with four screws.
- Pull tension straps through plastic loops and snap to roof rails (Figure 19).
- Hook folding top material to front top bow (Figure 22).
- Move front top bow forward and hook to folding top latches, push latches down until they click (Figure 21).

Rear Top Bow

Figure 6

Remove or Disconnect

1. Folding top from vehicle. Refer to "Folding Top" earlier in this section.
2. Four screws and rear top bow from vehicle.

Install or Connect

1. Rear top bow to vehicle; secure with four screws.
2. Folding top to vehicle. Refer to "Folding Top" earlier in this section.

SPECIFICATIONS

FASTENER TORQUES

Front and Rear Seat Belt Guide Loop Anchor Bolts ..... 45 N·m (33 lb.ft.)
Negative (-) Battery Cable-to-Negative (-) Battery Terminal Retainer ..... 15 N·m (11 lb.ft.)

SERVICE PARTS INFORMATION

Component Name Used in Section 10-9	Reference Name in Service Parts Catalog	Group Number
Folding Top Material	Top, Removable (Canvas)	16.585
Folding Top Latch	Latch, F/Top Front	16.585
Folding Top Tension Strap	Cable, F/Top Cvr Frt Si Ten	16.585
Front Top Bow	Bow, F/Top #1 (Frt Hdr)	16.585
Rear Top Bow	Frame, F/Top Cover	16.585
Rear Top Bow Strut	Brace, F/Top Stab	16.585
Rear Top Bow Strut Bracket Side Support Frame	Frame, F/Top Q/Wdo	16.585
Side Support Frame Clip	Clip, F/Top Qtr Window Frame	16.585
Side Support Frame Upper Bracket	Bracket, F/Top Q/Wdo Upr Frame	16.585
Side Support Frame Lower Bracket	Bracket, F/Top Q/Wdo Rr Frame	16.585
Folding Top Latch	Latch, F/Top Front	16.585
Plastic Loop	Rod, F/Top Front Tension	16.585
Rear Window Frame Clip	Holder, F/Top Rear Window	16.585
Rear Corner Frame Bracket	Hook, F/Top Lat	16.585
Rubber Stopper	Stop, F/Top Frm Br	16.585
Rear Top Bow Retaining Strap	Strap, F/Top Rr Window to Cover	16.585
Rear Top Bow Pivot Bracket	Bracket, F/Top (to Frt Piv Brkt)	16.585
Rear Top Bow Pivot Bracket Cover	Cover, F/Top (to Frt Piv Brkt)	16.585
Rear Top Bow Strut Retaining Clamp	Holder, F/Top Frm Br	16.585

SECTION 10-10

SEATS

NOTICE: When fasteners are removed, always reinstall them at the same location from which they were removed. If a fastener needs to be replaced, use the correct part number fastener for that application. If the correct part number fastener is not available, a fastener of equal size and strength (or stronger) may be used. Fasteners that are not reused, and those requiring thread-locking compound, will be called out. The correct torque values must be used when installing fasteners that require them. If the above procedures are not followed, parts or system damage could result.

CONTENTS

General Description 10-10-1
Front Seats 10-10-1
Rear Seats 10-10-1
On-Vehicle Service 10-10-4
Front Seats 10-10-4
Front Seatback 10-10-4
Front Seatback Cover 10-10-5
Front Seat Cushion 10-10-5
Front Seat Cushion Cover 10-10-6
Front Seat Head Restraint — LSi Models 10-10-6
Front Seat Recliner Mechanism 10-10-6
Front Seat Adjuster 10-10-6
Rear Seats 10-10-9
Full-Width Folding Rear Seat — Base Models 10-10-9
Rear Seatback — Base Models 10-10-10
Rear Seatback Cover — Base Models 10-10-11
Rear Seat Cushion — Base Models 10-10-11
Rear Seat Cushion Cover — Base Models 10-10-12
Rear Seat Cushion Trim Cover — Base Models 10-10-12
Rear Seat Latch — Base Models 10-10-13
Rear Seat Latch Striker — Base Models 10-10-13
50-50 Spilt Rear Seat — LSi Models 10-10-15
Rear Seat Rails — LSi Models 10-10-15
Rear Seatback — LSi Models 10-10-16
Rear Seatback Cover — LSi Models 10-10-17
Rear Seat Cushion — LSi Models 10-10-18
Rear Seat Cushion Cover — LSi Models 10-10-18
Rear Seat Cushion Trim Cover — LSi Models 10-10-19
Rear Seat Latch Striker — LSi Models 10-10-19
Specifications 10-10-20
Fastener Torques 10-10-20
Service Parts Information 10-10-20

GENERAL DESCRIPTION

FRONT SEATS

This vehicle is equipped with high-backed bucket seats (Base models) or low-backed buckets seats with separate head restraints (LSi models). Seat cushions and seatbacks have formed foam pads, which fit the contour of the full panel seatback frame assembly and the seat cushion frame. All front bucket seats are equipped with seatback locking mechanisms and manual reclining mechanisms. For access to the rear cargo area, the front seatbacks move forward by use of the recliner lever. The recliner lever is an integral part of the recliner mechanism and is mounted on the outboard side of the seat.

NOTICE: Do not attempt to change the seat position by altering the designed seat adjuster-to-floor pan anchor provisions or seat adjuster-to-seat frame anchor provisions. This adjustment could affect the performance of the seat system.

REAR SEATS

Base models are equipped with full-width folding rear seats and LSi models with 50-50 split rear seats. The rear seats on both models fold forward to expand the rear cargo area.

NOTICE: Do not attempt to change the seat position by altering the designed seat adjuster-to-floor pan anchor provisions or seat adjuster-to-seat frame anchor provisions. This adjustment could affect the performance of the seat system.

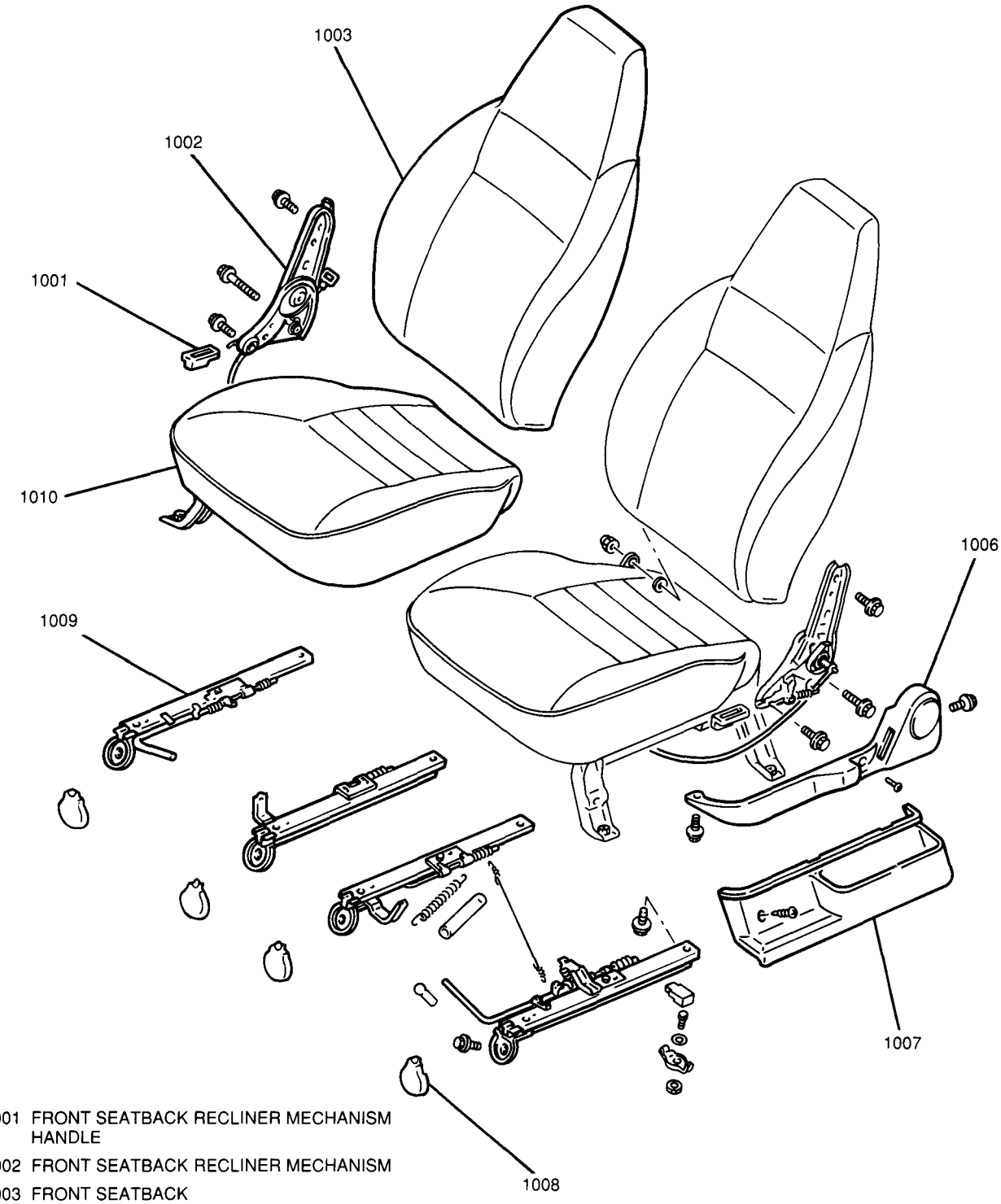

1001 FRONT SEATBACK RECLINER MECHANISM HANDLE

1002 FRONT SEATBACK RECLINER MECHANISM

1003 FRONT SEATBACK

1006 FRONT SEATBACK RECLINER MECHANISM TRIM COVER

1007 FRONT SEAT ADJUSTER TRIM COVER

1008 FRONT SEAT ANCHOR BOLT COVER

1009 FRONT SEAT ADJUSTER

1010 FRONT SEAT CUSHION

NC2512-10-10-JT-RS

Figure 1 Front Seats — Base Models

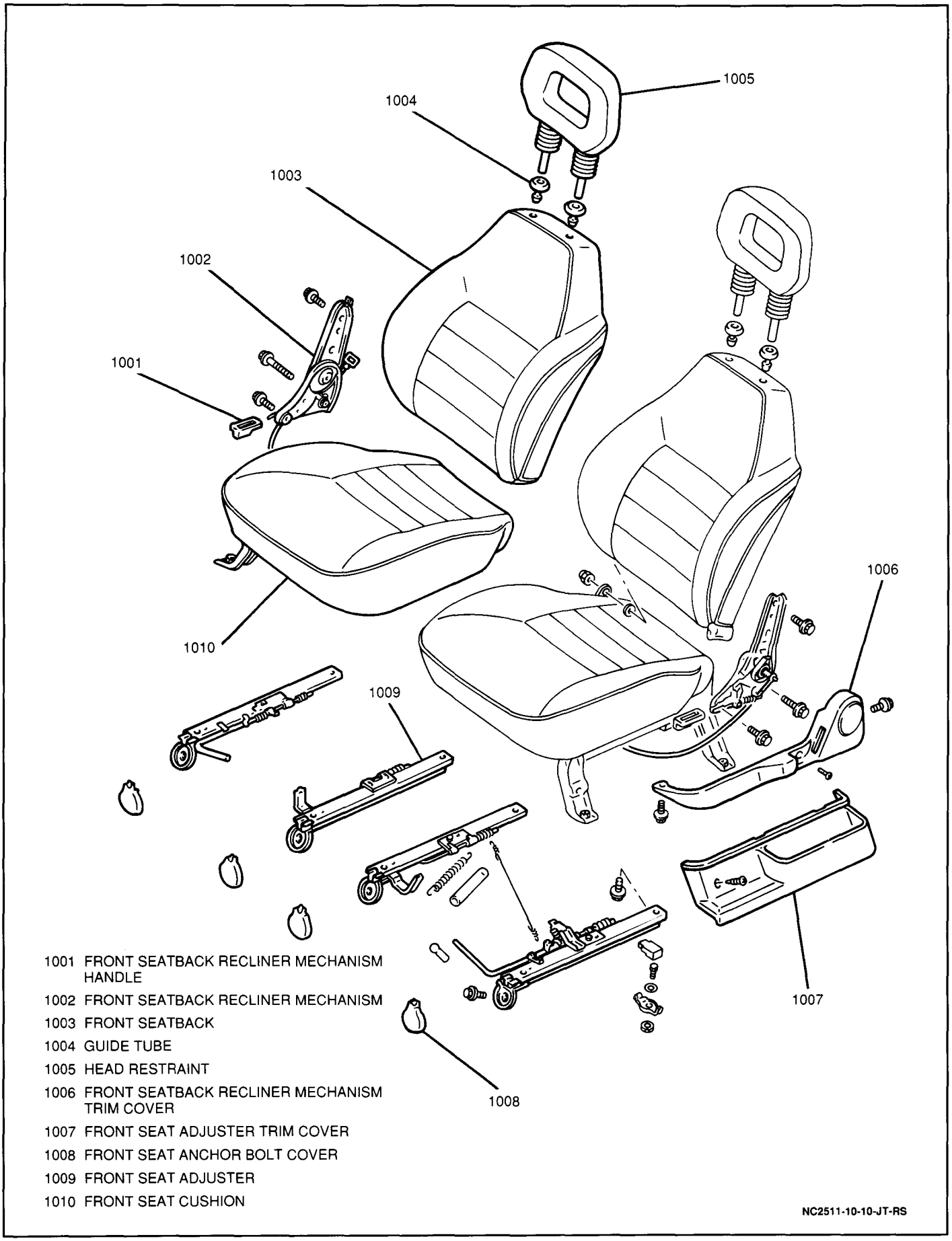

1001 FRONT SEATBACK RECLINER MECHANISM HANDLE
1002 FRONT SEATBACK RECLINER MECHANISM
1003 FRONT SEATBACK
1004 GUIDE TUBE
1005 HEAD RESTRAINT
1006 FRONT SEATBACK RECLINER MECHANISM TRIM COVER
1007 FRONT SEAT ADJUSTER TRIM COVER
1008 FRONT SEAT ANCHOR BOLT COVER
1009 FRONT SEAT ADJUSTER
1010 FRONT SEAT CUSHION

Figure 2 Front Seats — LSi Models

ON-VEHICLE SERVICE

FRONT SEATS

Figures 1, 2 and 3

Remove or Disconnect

1. Two screws and front seat adjuster trim cover (Figure 3).

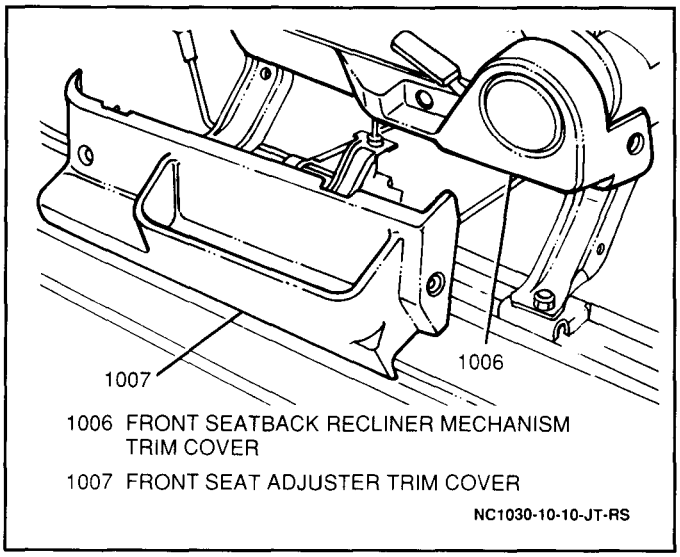

Figure 3 Front Seat Adjuster Trim Cover

2. Four front seat anchor bolt covers.
3. Four front seat anchor bolts from front seat and seat from vehicle.

Install or Connect

1. Front seat to vehicle; secure with four anchor bolts.

   Tighten

   - Front seat anchor bolts to 25 N·m (19 lb.ft.).
2. Four front seat anchor bolt covers.
3. Front seat adjuster trim cover to front seat; secure with two screws (Figure 3).

Front Seatback

Figures 1 through 6

Remove or Disconnect

1. Two screws and front seat adjuster trim cover from front seat (Figure 3).
   - Pull front seatback recliner mechanism handle off recliner mechanism.
2. Three screws and front seatback recliner mechanism trim cover (Figure 4).

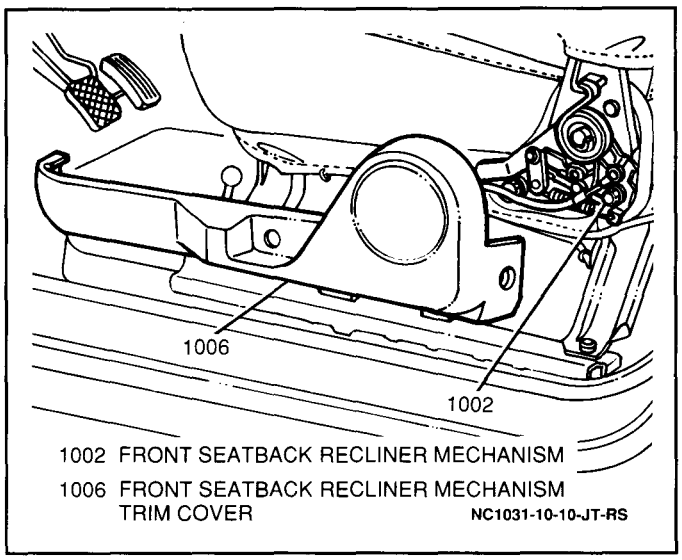

Figure 4 Front Seatback Recliner Mechanism Trim Cover

3. Front seat adjuster actuator cable from recliner mechanism (Figure 5).

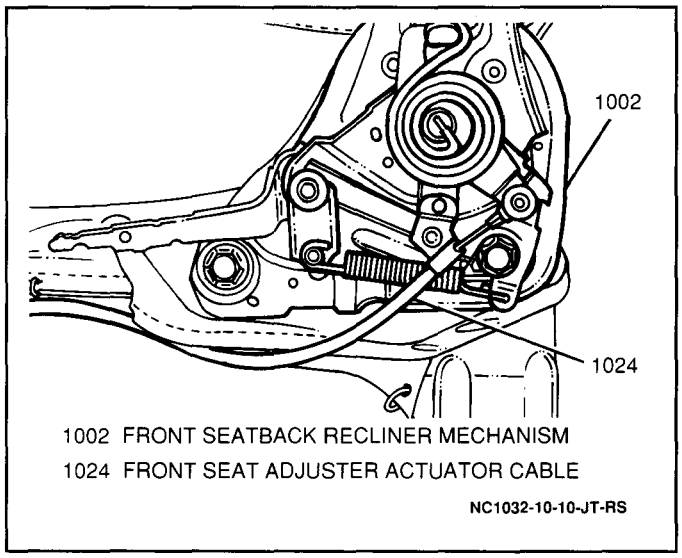

Figure 5 Front Seatback Recliner Mechanism

4. Two mounting bolts securing the front seatback recliner mechanism to the front seat cushion (Figure 5).
5. One nut and front seatback from front seat cushion (Figure 6).

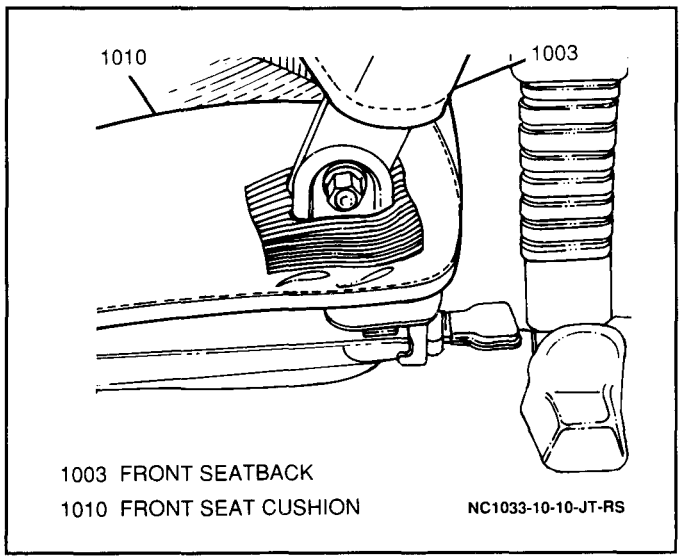

Figure 6 Front Seatback-to-Front Seat Cushion Mounting Nut

Install or Connect

1. Front seatback to front seat cushion; secure with one nut (Figure 6).

Tighten

- Front seatback-to-front seat cushion nut to 15 N·m (11 lb.ft.).

2. Front seatback recliner mechanism to front seat cushion; secure with two mounting bolts (Figure 5).

Tighten

- Front seat recliner mechanism-to-front seat cushion mounting bolts to 19 N·m (14 lb.ft.).

3. Front seat adjuster actuator cable to recliner mechanism (Figure 5).
4. Front seatback recliner mechanism trim cover to recliner mechanism; secure with three screws (Figure 4).
- Press front seatback recliner mechanism handle onto recliner mechanism.
5. Front seat adjuster trim cover to front seat; secure with two screws (Figure 3).

Front Seatback Cover

Figures 1 through 6

Remove or Disconnect

1. Two screws and front seat adjuster trim cover from front seat (Figure 3).
- Pull front seatback recliner mechanism handle off recliner mechanism.
2. Three screws and front seatback recliner mechanism trim cover (Figure 4).
3. Front seat adjuster actuator cable from recliner mechanism (Figure 5).
4. Two mounting bolts securing the front seatback recliner mechanism to the front seat cushion (Figure 5).
5. One nut and front seatback from front seat cushion (Figure 6).
- Push in release clip and pull head restraint up and out of guide tubes (LSi models).
- With a flat-bladed tool, gently pry guide tubes from front seatback, disengaging retaining clips (LSi models).
- Cut hog rings securing front seatback cover to seatback frame.
- Roll front seatback cover, slowly and evenly, up from seatback bottom and remove from seatback.

Install or Connect

- Roll front seatback cover down from seatback top; secure cover with hog rings.
1. Guide tubes to front seatback, engaging retaining clips (LSi models).
- Push in release clip and gently push head restraint into guide tubes (LSi models).
2. Front seatback-to-front seat cushion; secure with one nut (Figure 6).

Tighten

- Front seatback-to-front seat cushion nut to 15 N·m (11 lb.ft.).

3. Front seatback recliner mechanism to front seat cushion; secure with two mounting bolts (Figure 5).

Tighten

- Front seat recliner mechanism-to-front seat cushion mounting bolts to 19 N·m (14 lb.ft.).

4. Front seat adjuster actuator cable to recliner mechanism (Figure 5).
5. Front seatback recliner mechanism trim cover to recliner mechanism; secure with three screws (Figure 4).
- Press front seatback recliner mechanism handle onto recliner mechanism.
6. Front seat adjuster trim cover to front seat; secure with two screws (Figure 3).

Front Seat Cushion

Figures 1 and 2

Remove or Disconnect

1. Four front seat anchor bolt covers.
2. Four front seat anchor bolts from front seat and seat from vehicle.
3. Front seatback from seat cushion. Refer to "Front Seatback" earlier in this section.
4. Two bolts from each front seat adjuster and adjusters from front seat cushion.

Install or Connect

1. Seat adjusters to front seat cushion; secure each with two bolts.

Tighten

- Front seat adjuster-to-front seat cushion bolts to 25 N·m (19 lb.ft.).

2. Front seatback to seat cushion. Refer to "Front Seatback" earlier in this section.
3. Front seat to vehicle; secure with four bolts.

Tighten

- Front seat anchor bolts to 25 N·m (19 lb.ft.).

4. Four front seat anchor bolt covers.

Front Seat Cushion Cover

Figures 1 and 2

Remove or Disconnect

1. Four front seat anchor bolt covers.
2. Four front seat anchor bolts from front seat and seat from vehicle.
3. Front seatback from seat cushion. Refer to "Front Seatback" earlier in this section.
4. Two bolts from each front seat adjuster and adjusters from front seat cushion.
- Cut hog rings securing front seat cushion cover to seat.
5. Front seat cushion cover from cushion frame.

Install or Connect

1. Front seat cushion cover to cushion frame; secure with hog rings.
2. Seat adjusters to front seat cushion; secure each with two bolts.

Tighten

- Front seat adjuster-to-front seat cushion bolts to 25 N·m (19 lb.ft.).

3. Front seatback to seat cushion. Refer to "Front Seatback" earlier in this section.
4. Front seat to vehicle; secure with four bolts.

Tighten

- Front seat anchor bolts to 25 N·m (19 lb.ft.).

5. Four front seat anchor bolt covers.

Front Seat Head Restraint — LSi Models

Figure 2

Remove or Disconnect

- Push in release clip and pull head restraint up and out of guide tubes.
- With a flat-bladed tool, gently pry guide tubes from front seatback, disengaging retaining clips.

Install or Connect

- Guide tubes to front seatback, engaging retaining clips.
- Push in release clip and gently push head restraint into guide tubes.

Front Seat Recliner Mechanism

Figures 1 through 6

Remove or Disconnect

1. Two screws and front seat adjuster trim cover from front seat assembly (Figure 3).
- Pull front seatback recliner mechanism handle off recliner mechanism.
2. Three screws and front seatback recliner mechanism trim cover (Figure 4).
3. Front seat adjuster actuator cable from recliner mechanism (Figure 5).
4. Two mounting bolts securing the front seatback recliner mechanism to the front seat cushion (Figure 5).
5. One nut and front seatback from front seat cushion (Figure 6).
- Push in release clip and pull head restraint up and out of guide tubes (LSi models).
- With a flat-bladed tool, gently pry guide tubes from front seatback, disengaging retaining clips (LSi models).
- Cut hog rings securing front seatback cover to seatback frame.
- Roll front seatback cover up far enough to gain access to the recliner mechanism mounting bolt.
6. One mounting bolt and recliner mechanism from front seatback.

Install or Connect

1. Recliner mechanism to front seatback; secure with one mounting bolt.

Tighten

- Recliner mechanism-to-front seatback mounting bolt to 15 N·m (11 lb.ft.).

- Roll front seatback cover down from seatback top; secure cover with hog rings.
2. Guide tubes to front seatback, engaging retaining clips (LSi models).
- Push in release clip and gently push head restraint into guide tubes (LSi models).
3. Front seatback to front seat cushion; secure with one nut (Figure 6).

Tighten

- Front seatback-to-front seat cushion nut to 15 N·m (11 lb.ft.).

4. Front seatback recliner mechanism to front seat cushion; secure with two mounting bolts (Figure 5).

Tighten

- Front seat recliner mechanism-to-front seat cushion mounting bolts to 19 N·m (14 lb.ft.).

5. Front seat adjuster actuator cable to recliner mechanism (Figure 5).
6. Front seatback recliner mechanism trim cover to recliner mechanism; secure with three screws (Figure 4).
- Press front seatback recliner mechanism handle onto recliner mechanism.
7. Front seat adjuster trim cover to front seat; secure with two screws (Figure 3).

Front Seat Adjuster

Figures 1 through 5

Remove or Disconnect

1. Two screws and front seat adjuster trim cover from front seat assembly (Figure 3).

2. Four front seat anchor bolt covers.
3. Four front seat anchor bolts from front seat and seat from vehicle.
- Pull front seatback recliner mechanism handle off recliner mechanism.
4. Three screws and front seatback recliner mechanism trim cover (Figure 4).
5. Front seat adjuster actuator cable from recliner mechanism (Figure 5).
6. Front seat adjuster actuator cable from seat adjuster.
7. Two bolts and front seat adjuster from front seat cushion.

Install or Connect

1. Front seat adjuster to front seat cushion; secure with two bolts.

Tighten

- Front seat adjuster-to-front seat cushion bolts to 25 N·m (19 lb.ft.).

2. Front seat adjuster actuator cable to seat adjuster.
3. Front seat adjuster actuator cable to recliner mechanism (Figure 5).
4. Front seatback recliner mechanism trim cover to recliner mechanism; secure with three screws (Figure 4).
5. Front seatback recliner mechanism handle onto recliner mechanism.
6. Front seat to vehicle; secure with four anchor bolts.

Tighten

- Front seat anchor bolts to 25 N·m (19 lb.ft.).

7. Four front seat anchor bolt covers.
8. Front seat adjuster trim cover to front seat; secure with two screws (Figure 3).

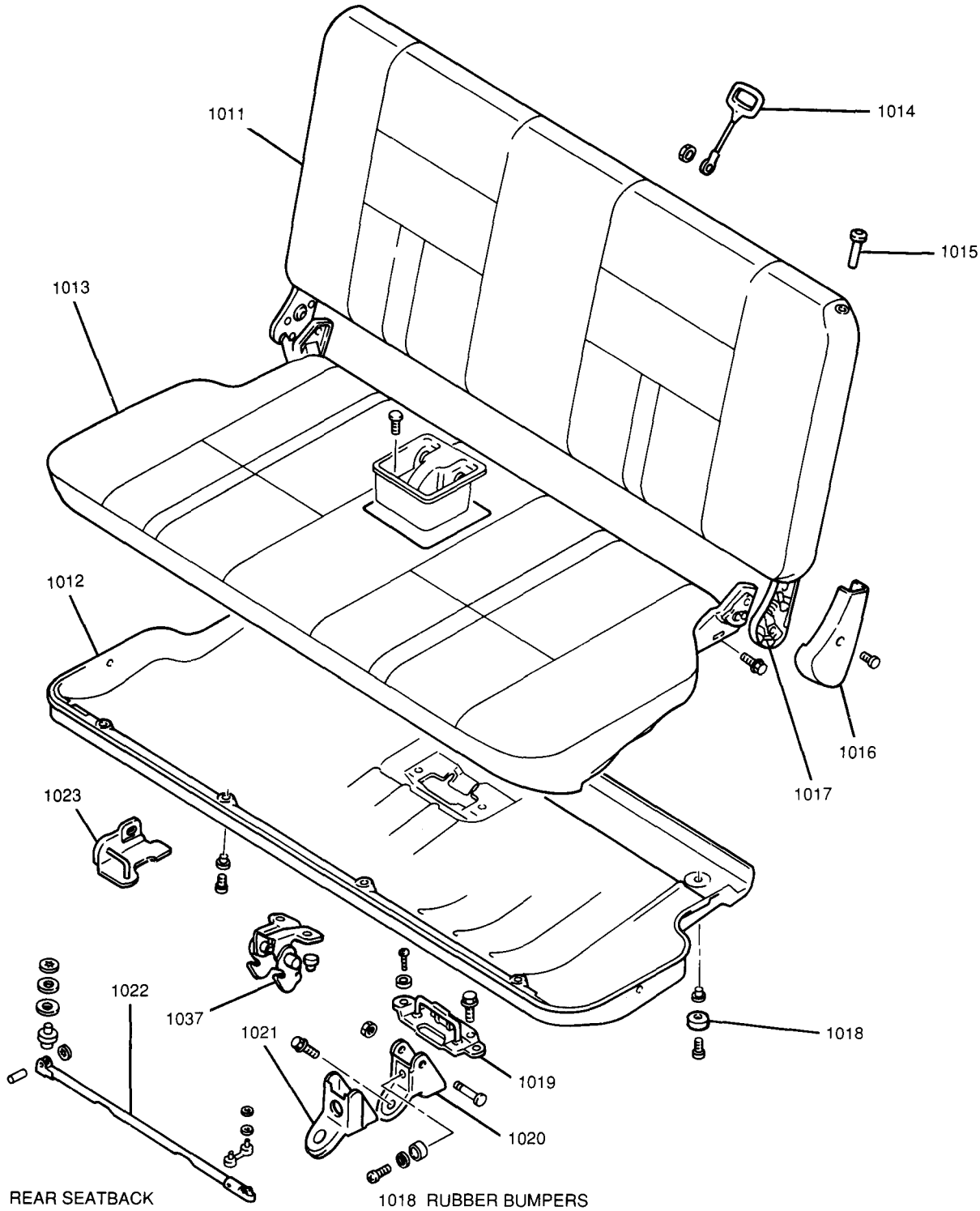

1011 REAR SEATBACK
1012 REAR SEAT CUSHION TRIM COVER
1013 REAR SEAT CUSHION
1014 REAR SEAT RELEASE HANDLE
1015 REAR SEATBACK LOCK KNOB
1016 REAR SEAT FRAME HINGE COVER
1017 REAR SEAT FRAME HINGE
1018 RUBBER BUMPERS
1019 REAR SEAT LATCH STRIKER
1020 REAR SEAT HINGE
1021 REAR SEAT HINGE COVER
1022 REAR SEAT SUPPORT ROD
1023 REAR SEAT SUPPORT ROD STRIKER
1037 REAR SEAT LATCH

NC2513-10-10-JT-RS

Figure 7 Full-Width Folding Rear Seat — Base Models

REAR SEATS

Full-Width Folding Rear Seat — Base Models

Figures 7 through 11

Remove or Disconnect

- Fold rear seatback, pull rear seat release handle and raise rear seat.
- Unclip rear seat support rod from bottom of seat and support rear seat (Figure 8).

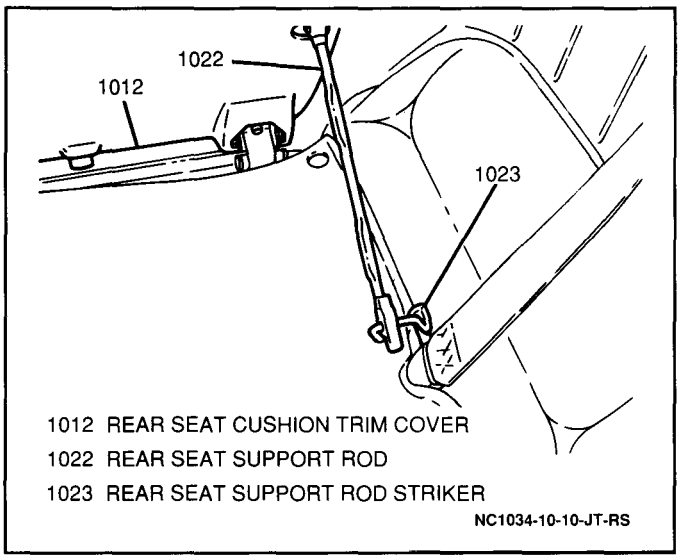

Figure 8 Rear Seat Supported in Upright Position — Typical

1. One rear anchor bolt from each rear seat hinge (Figure 9).

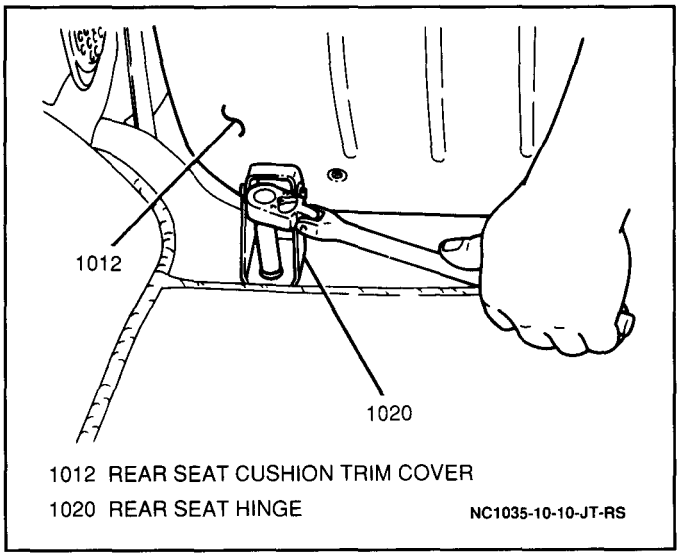

Figure 9 Removing Rear Seat Rear Anchor Bolts — Base Models

- Lower rear seat.
- Gently pry hinge cover from each rear seat hinge (Figure 10).

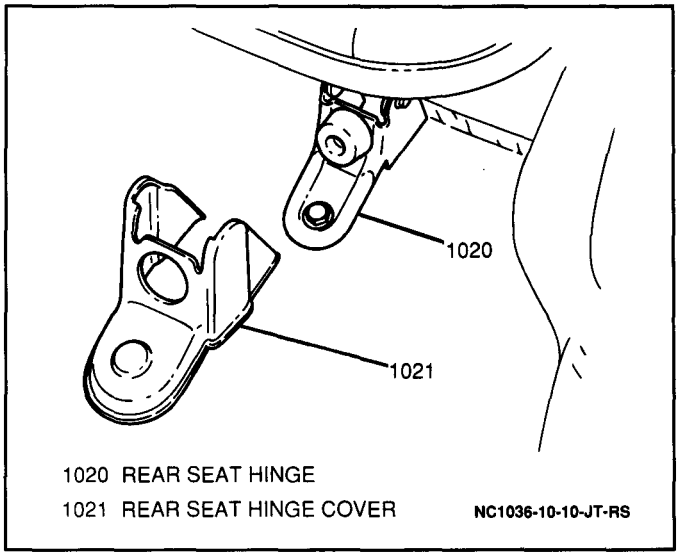

Figure 10 Rear Seat Hinge Cover — Base Models

2. One front anchor bolt from each rear seat hinge and rear seat from vehicle (Figure 11).

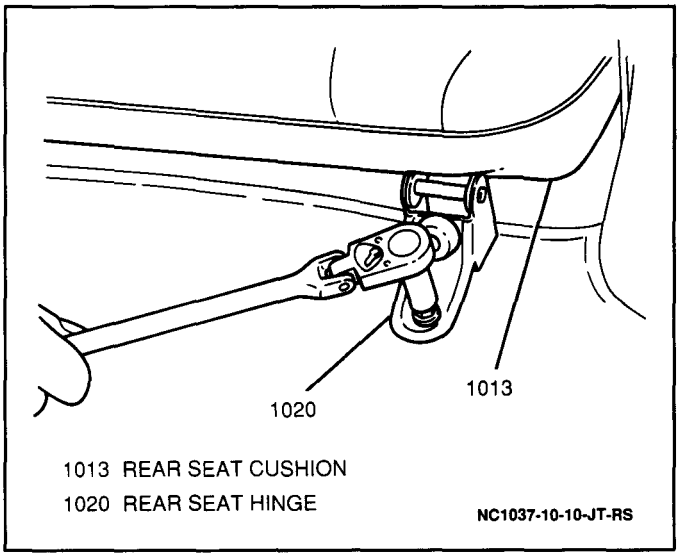

Figure 11 Removing Rear Seat Front Anchor Bolt — Base Models

Install or Connect

1. Rear seat to vehicle; secure with one front anchor bolt to each rear seat hinge.

   Tighten

   - Rear seat front anchor bolts to 25 N·m (19 lb.ft.).

2. Hinge cover to each rear seat hinge (Figure 10).
   - Raise and support with rear seat support rod (Figure 8).
3. One rear anchor bolt to each rear seat hinge.

Tighten

- Rear seat rear anchor bolts to 25 N·m (19 lb.ft.).

- Clip support rod to bottom of rear seat and lower seat.
- Raise rear seatback into upright position.

Rear Seatback — Base Models

Figures 7 through 13

Remove or Disconnect

- Fold rear seatback, pull rear seat release handle and raise rear seat.
- Unclip rear seat support rod from bottom of seat and support rear seat (Figure 8).

1. One rear anchor bolt from each rear seat hinge (Figure 9).

- Lower rear seat.
- Gently pry hinge cover from each rear seat hinge (Figure 10).

2. One front anchor bolt from each rear seat hinge and rear seat from vehicle (Figure 11).
3. One clip and one pin from each rear seat hinge and hinges from seat (Figure 12).

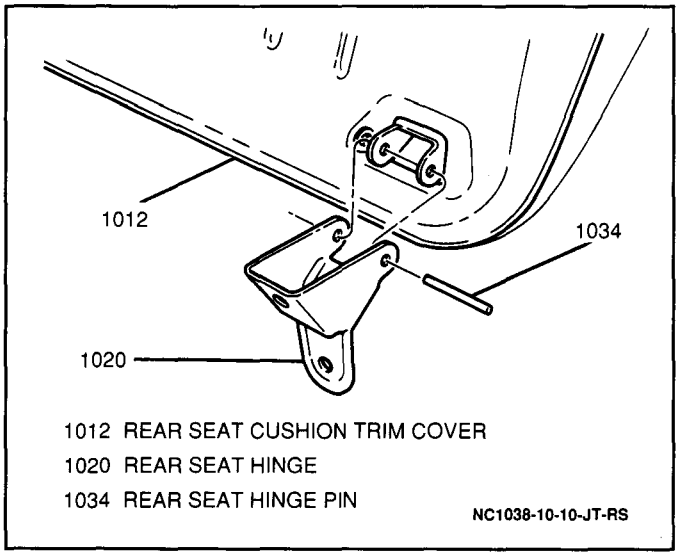

Figure 12 Rear Seat Hinge Removal — Base Models

4. One clip, one pin and support rod from rear seat.
5. One clip, one pin and rear seat release handle from seat.
6. One screw from each rubber bumper and bumpers from rear seat.
7. Six screws and rear seat cushion trim cover from bottom of rear seat.
8. Two bolts from each side of rear seatback and rear seatback from rear seat cushion (Figure 13).

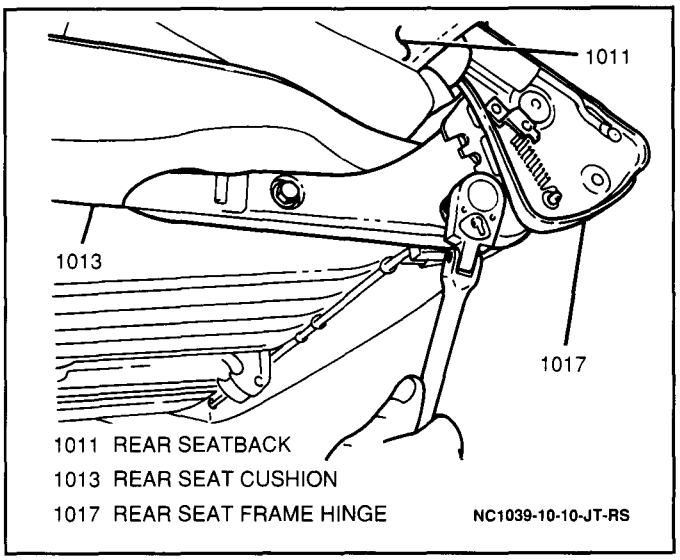

Figure 13 Removing Rear Seatback-to-Rear Seat Cushion Bolts — Base Models

Install or Connect

1. Rear seatback to rear seat cushion; secure with four bolts, two bolts on each side of rear seatback.

Tighten

- Rear seatback-to-rear seat cushion bolts to 25 N·m (19 lb.ft.).

2. Rear seat cushion trim cover to bottom of rear seat; secure with six screws.
3. Rubber bumpers to rear seat; secure each with one screw.
4. Rear seat release handle; secure with one pin and one clip.
5. Support rod to rear seat; secure with one pin and one clip.
6. Rear seat hinges to seat; secure each with one pin and one clip.
7. Rear seat to vehicle; secure with one front anchor bolt to each rear seat hinge.

Tighten

- Rear seat front anchor bolts to 25 N·m (19 lb.ft.).

8. Hinge cover to each rear seat hinge (Figure 10).

- Raise and support with rear seat support rod (Figure 8).

9. One rear anchor bolt to each rear seat hinge.

Tighten

- Rear seat rear anchor bolts to 25 N·m (19 lb.ft.).

- Clip support rod to bottom of rear seat and lower seat.
- Raise rear seatback into upright position.

Rear Seatback Cover — Base Models

Figures 7 through 13

Remove or Disconnect

- Fold rear seatback, pull rear seat release handle and raise rear seat.
- Unclip rear seat support rod from bottom of seat and support rear seat (Figure 8).

1. One rear anchor bolt from each rear seat hinge (Figure 9).

- Lower rear seat.
- Gently pry hinge cover from each rear seat hinge (Figure 10).

2. One front anchor bolt from each rear seat hinge and rear seat from vehicle (Figure 11).
3. One clip and one pin from each rear seat hinge and hinges from seat (Figure 12).
4. One clip, one pin and support rod from rear seat.
5. One clip, one pin and rear seat release handle from seat.
6. One screw from each rubber bumper and bumpers from rear seat.
7. Six screws and rear seat cushion trim cover from bottom of rear seat.
8. Two bolts from each side of rear seatback and rear seatback from rear seat cushion (Figure 13).

- Unscrew two rear seatback lock knobs counterclockwise and remove from seat.
- Unzip rear seatback cover and slide off seatback frame.

Install or Connect

- Slide rear seatback cover over seatback frame and zip cover closed.

1. Two rear seatback lock knobs to seatback, screw on clockwise to secure.
2. Rear seatback to rear seat cushion; secure with four bolts, two bolts on each side of rear seatback.

Tighten

- Rear seatback-to-rear seat cushion bolts to 25 N·m (19 lb.ft.).

3. Rear seat cushion trim cover to bottom of rear seat; secure with six screws.
4. Rubber bumpers to rear seat; secure each with one screw.
5. Rear seat release handle; secure with one pin and one clip.
6. Support rod to rear seat; secure with one pin and one clip.
7. Rear seat hinges to seat; secure each with one pin and clip.
8. Rear seat to vehicle; secure with one front anchor bolt to each rear seat hinge

Tighten

- Rear seat front anchor bolts to 25 N·m (19 lb.ft.).

9. Hinge cover to each rear seat hinge (Figure 10).

- Raise and support with rear seat support rod (Figure 8).

10. One rear anchor bolt to each rear seat hinge.

Tighten

- Rear seat rear anchor bolts to 25 N·m (19 lb.ft.).

- Clip support rod to bottom of rear seat and lower seat.
- Raise rear seatback into upright position.

Rear Seat Cushion — Base Models

Figures 7 through 13

Remove or Disconnect

- Fold rear seatback, pull rear seat release handle and raise rear seat.
- Unclip rear seat support rod from bottom of seat and support rear seat (Figure 8).

1. One rear anchor bolt from each rear seat hinge (Figure 9).

- Lower rear seat.
- Gently pry hinge cover from each rear seat hinge (Figure 10).

2. One front anchor bolt from each rear seat hinge and seat from vehicle (Figure 11).
3. One clip and one pin from each rear seat hinge and hinges from seat (Figure 12).
4. One clip, one pin and support rod from rear seat.
5. One clip, one pin and rear seat release handle from seat.
6. One screw from each rubber bumper and bumpers from seat.
7. Six screws and rear seat cushion trim cover from seat.
8. Two bolts from each side of rear seatback and rear seatback from rear seat cushion (Figure 13).

Install or Connect

1. Rear seatback to rear seat cushion; secure with four bolts, two bolts on each side of rear seatback.

Tighten

- Rear seatback-to-rear seat cushion bolts to 25 N·m (19 lb.ft.).

2. Rear seat cushion trim cover to bottom of rear seat; secure with six screws.
3. Rubber bumpers to rear seat; secure each with one screw.
4. Rear seat release handle; secure with one pin and one clip.
5. Support rod to rear seat; secure with one pin and one clip.
6. Rear seat hinges to seat; secure each with one pin and one clip.
7. Rear seat to vehicle; secure with one front anchor bolt to each rear seat hinge.

Tighten

- Rear seat front anchor bolts to 25 N·m (19 lb.ft.).

8. Hinge cover to each rear seat hinge (Figure 10).

- Raise and support with rear seat support rod (Figure 8).

9. One rear anchor bolt to each rear seat hinge.

Tighten

- Rear seat rear anchor bolts to 25 N·m (19 lb.ft.).

- Clip support rod to bottom of rear seat and lower seat.
- Raise rear seatback into upright position.

Rear Seat Cushion Cover — Base Models

Figures 7 through 13

Remove or Disconnect

- Fold rear seatback, pull rear seat release handle and raise rear seat.
- Unclip rear seat support rod from bottom of seat and support rear seat (Figure 8).

1. One rear anchor bolt from each rear seat hinge (Figure 9).

- Lower rear seat.
- Gently pry hinge cover from each rear seat hinge (Figure 10).

2. One front anchor bolt from each rear seat hinge and seat from vehicle (Figure 11).
3. One clip and one pin from each rear seat hinge and hinges from seat (Figure 12).
4. One clip, one pin and support rod from rear seat.
5. One clip, one pin and rear seat release handle from seat.
6. One screw from each rubber bumper and bumpers from seat.
7. Six screws and rear seat cushion trim cover from seat.
8. Two bolts from each side of rear seatback and rear seatback from rear seat cushion (Figure 13).

- Cut hog rings and remove rear seat cushion cover from seat cushion.

Install or Connect

1. Rear seat cushion cover to seat cushion; secure with hog rings.
2. Rear seatback to rear seat cushion; secure with four bolts, two bolts on each side of rear seatback.

Tighten

- Rear seatback-to-rear seat cushion bolts to 25 N·m (19 lb.ft.).

3. Rear seat cushion trim cover to bottom of rear seat; secure with six screws.
4. Rubber bumpers to rear seat; secure each with one screw.
5. Rear seat release handle; secure with one pin and one clip.
6. Support rod to rear seat; secure with one pin and one clip.
7. Rear seat hinges to seat; secure each with one pin and one clip.
8. Rear seat to vehicle; secure with one front anchor bolt to each rear seat hinge.

Tighten

- Rear seat front anchor bolts to 25 N·m (19 lb.ft.).

9. Hinge cover to each rear seat hinge (Figure 10).

- Raise and support with rear seat support rod (Figure 8).

10. One rear anchor bolt to each rear seat hinge.

Tighten

- Rear seat rear anchor bolts to 25 N·m (19 lb.ft.).

- Clip support rod to bottom of rear seat and lower seat.
- Raise rear seatback into upright position.

Rear Seat Cushion Trim Cover — Base Models

Figures 7 through 12

Remove or Disconnect

- Fold rear seatback, pull rear seat release handle and raise rear seat.
- Unclip rear seat support rod from bottom of seat and support rear seat (Figure 8).

1. One rear anchor bolt from each rear seat hinge (Figure 9).

- Lower rear seat.
- Gently pry hinge cover from each rear seat hinge (Figure 10).

2. One front anchor bolt from each rear seat hinge and seat from vehicle (Figure 11).
3. One clip and one pin from each rear seat hinge and hinges from seat (Figure 12).
4. One clip, one pin and support rod from rear seat.
5. One clip, one pin and rear seat release handle from seat.
6. One screw from each rubber bumper and bumpers from seat.
7. Six screws and rear seat cushion trim cover from rear seat.

Install or Connect

1. Rear seat cushion trim cover to bottom of rear seat; secure with six screws.
2. Rubber bumpers to rear seat; secure each with one screw.
3. Rear seat release handle; secure with one pin and clip.
4. Support rod to rear seat; secure with one pin and clip.
5. Rear seat hinges to seat; secure each with one pin and clip.
6. Rear seat to vehicle; secure with one front anchor bolt to each rear seat hinge.

Tighten

- Rear seat front anchor bolts to 25 N·m (19 lb.ft.).

7. Hinge cover to each rear seat hinge (Figure 10).

- Raise and support with rear seat support rod (Figure 8).

8. One rear anchor bolt to each rear seat hinge.

Tighten

- Rear seat rear anchor bolts to 25 N·m (19 lb.ft.).

- Clip rear seat support rod to bottom of rear seat and lower seat.
- Raise rear seatback into upright position.

Rear Seat Latch — Base Models

Figures 7 through 12

Remove or Disconnect

- Fold rear seatback, pull rear seat release handle and raise rear seat.
- Unclip rear seat support rod from bottom of seat and support rear seat (Figure 8).

1. One rear anchor bolt from each rear seat hinge (Figure 9).

- Lower rear seat.
- Gently pry hinge cover from each rear seat hinge (Figure 10).

2. One front anchor bolt from each rear seat hinge and seat from vehicle (Figure 11).
3. One clip, one pin from each rear seat hinge and hinges from seat (Figure 12).
4. One clip, one pin and support rod from rear seat.
5. One clip, one pin and rear seat release handle from seat.
6. One screw from each rubber bumper and bumpers from seat.
7. Six screws and rear seat cushion trim cover from bottom of rear seat.
8. One bolt from each rear seat belt buckle and buckles from seat.
9. Two mounting nuts and rear seat latch from bottom of seat cushion.

Install or Connect

1. Rear seat latch to bottom of seat cushion; secure with two mounting bolts.

   Tighten

   - Rear seat latch mounting bolts to 25 N·m (19 lb.ft.).

2. Rear seat belt buckles to rear seat; secure with two bolts.

   Tighten

   - Rear seat belt buckle-to-rear seat bolts to 45 N·m (33 lb.ft.).

3. Rear seat cushion trim cover to bottom of rear seat; secure with six screws.
4. Rubber bumpers to rear seat; secure each with one screw.
5. Rear seat release handle; secure with one pin and one clip.
6. Support rod to rear seat; secure with one pin and one clip.
7. Rear seat hinges to seat; secure each with one pin and one clip.
8. Rear seat to vehicle; secure with one front anchor bolt to each rear seat hinge.

   Tighten

   - Rear seat front anchor bolts to 25 N·m (19 lb.ft.).

9. Hinge cover to each rear seat hinge (Figure 10).

- Raise rear seat and support with rear seat support rod (Figure 8).

10. One rear anchor bolt to each rear seat hinge.

    Tighten

    - Rear seat rear anchor bolts to 25 N·m (19 lb.ft.).

- Clip support rod to bottom of rear seat and lower seat.
- Raise rear seatback into upright position.

Rear Seat Latch Striker — Base Models

Figures 7, 8 and 14

Remove or Disconnect

- Fold rear seatback, pull rear seat release handle and raise rear seat.
- Unclip rear seat support rod from bottom of seat and support rear seat (Figure 8).

1. Three snap clips at the front of the rear floor carpet.

- Move carpet back to reveal striker mounting bolts.

2. Two mounting bolts from rear seat latch striker (Figure 14).

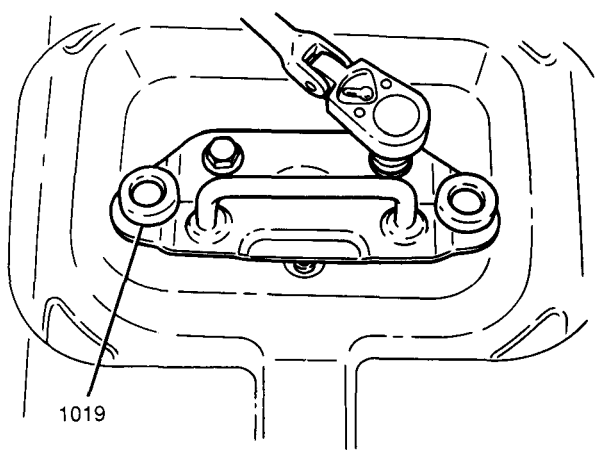

1019 REAR SEAT LATCH STRIKER NC1041-10-10-JT-RS

Figure 14 Removing Rear Seat Latch Striker — Base Models

3. Two screws from rear seat latch striker and striker from vehicle (Figure 14).

Install or Connect

1. Rear seat latch striker to vehicle; secure with two screws.
2. Two mounting bolts to rear seat latch striker.

   Tighten

   - Rear seat latch striker mounting bolts to 25 N·m (19 lb.ft.).

- Reposition carpet; secure with three snap clips.
- Clip support rod to bottom of rear seat and lower seat.
- Raise rear seatback into upright position.

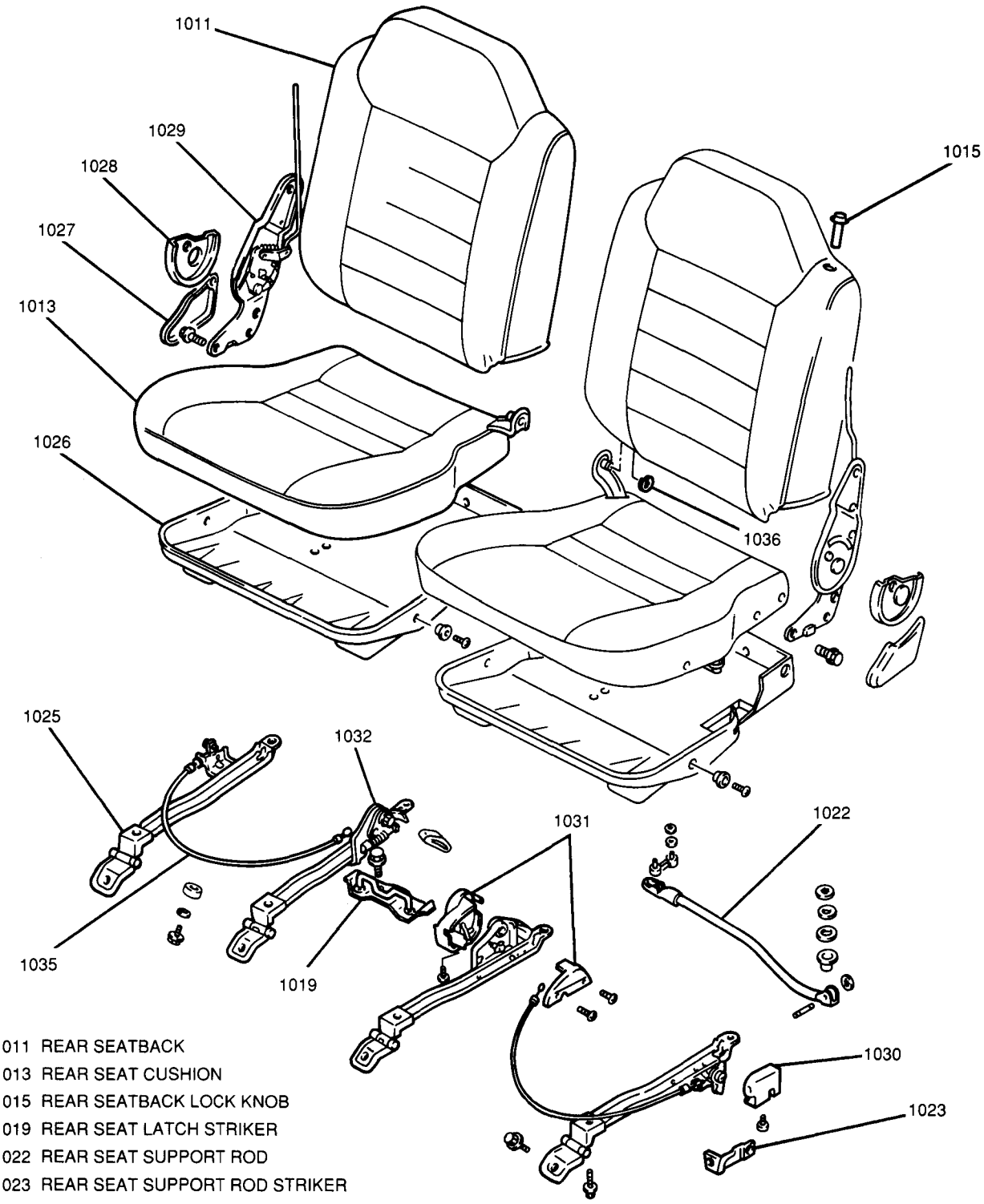

1011 REAR SEATBACK
1013 REAR SEAT CUSHION
1015 REAR SEATBACK LOCK KNOB
1019 REAR SEAT LATCH STRIKER
1022 REAR SEAT SUPPORT ROD
1023 REAR SEAT SUPPORT ROD STRIKER
1025 REAR SEAT OUTBOARD RAIL
1026 REAR SEAT CUSHION TRIM COVER
1027 REAR SEAT RECLINER MECHANISM LOWER TRIM COVER
1028 REAR SEAT RECLINER MECHANISM UPPER TRIM COVER
1029 REAR SEAT RECLINER MECHANISM
1030 REAR SEAT OUTBOARD RAIL TRIM COVER
1031 REAR SEAT INBOARD RAIL TRIM COVER
1032 REAR SEAT INBOARD RAIL
1035 REAR SEAT LATCH CABLE
1036 E-RING

NC2514-10-10-JT-RS

Figure 15 50-50 Split Rear Seats — LSi Models

50-50 Split Rear Seat – LSi Models

Figures 8, 15 and 16

Remove or Disconnect

1. Three snap clips at the front of the rear floor carpet.
   - Move carpet to reveal rear seat front anchor bolts (Figure 16).

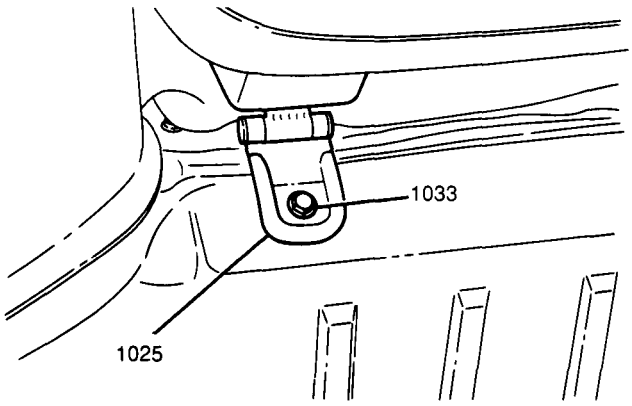

1025 REAR SEAT OUTBOARD RAIL
1033 REAR SEAT FRONT ANCHOR BOLT
NC1042-10-10-JT-RS

Figure 16 Rear Seat Front Anchor Bolt — LSi Models

2. One front anchor bolt from each rear seat rail.
   - Fold rear seatback and raise rear seat.
   - Unclip rear seat support rod from bottom of seat and support rear seat (Figure 8).
3. One rear anchor bolt from each rear seat rail and seat from vehicle.

Install or Connect

1. Rear seat to vehicle; secure with one front anchor bolt to each rear seat rail.

   Tighten

   - Rear seat front anchor bolts to 25 N·m (19 lb.ft.).
   - Raise and support rear seat with support rod (Figure 8).
2. One rear anchor bolt to each rear seat rail.

   Tighten

   - Rear seat rear anchor bolts to 25 N·m (19 lb.ft.).
   - Clip support rod to bottom of seat and lower seat.
   - Raise rear seatback into upright position.
   - Reposition carpet; secure with three snap clips.

Rear Seat Rails — LSi Models

Figures 8, 16, 17 and 18

Remove or Disconnect

1. Three snap clips at the front of the rear floor carpet.
   - Move carpet to reveal rear seat front anchor bolts (Figure 16).
2. One front anchor bolt from each rear seat rail.
   - Fold rear seatback and raise seat.
   - Unclip rear seat support rod from bottom of seat and support rear seat (Figure 8).
3. One rear anchor bolt from each rear seat rail and seat from vehicle.
   - Gently pry rear seat recliner mechanism lower trim cover loose and remove from seat.
4. One screw and rear seat outboard rail trim cover from seat.
5. Rear bolt from recliner mechanism (Figure 17).

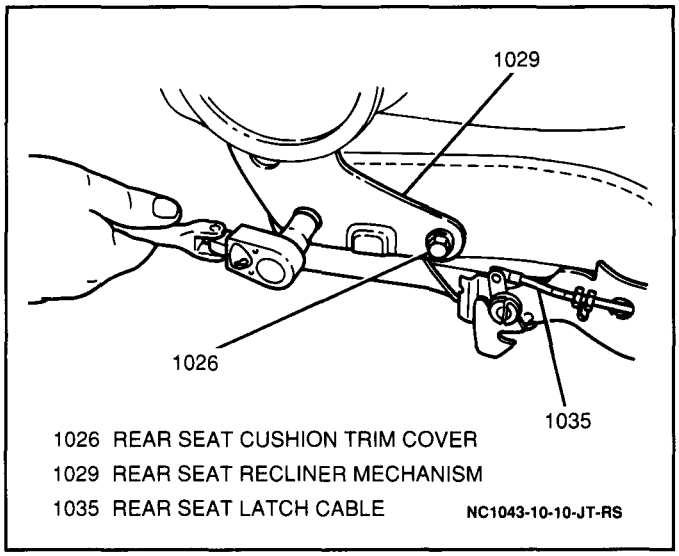

1026 REAR SEAT CUSHION TRIM COVER
1029 REAR SEAT RECLINER MECHANISM
1035 REAR SEAT LATCH CABLE
NC1043-10-10-JT-RS

Figure 17 Removing Recliner Mechanism Rear Bolt — LSi Models

6. Rear seat latch cable from outboard rail (Figure 17).
7. One screw from each cushion bumper and two cushion bumpers from seat.
8. One clip, one pin and support rod from rear seat.
9. Six screws from rear seat cushion trim cover.
   - Feed rear seat latch cable through rear seat cushion trim cover and remove cover from seat.
10. Two bolts and outboard rail from seat.
11. Two bolts and inboard rail from seat.
12. Two screws and inboard rail trim cover from rail (Figure 18).

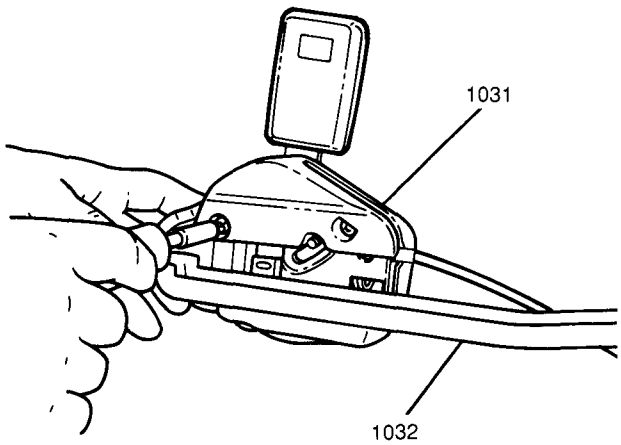

1031 REAR SEAT INBOARD RAIL TRIM COVER
1032 REAR SEAT INBOARD RAIL
NC1045-10-10-JT-RS

Figure 18 Removing Rear Seat Inboard Rail Trim Cover Screws — LSi Models

13. Rear seat latch cable from inboard rail.

Install or Connect

1. Rear seat latch cable to inboard rail.
2. Inboard rail trim cover to rail; secure with two screws (Figure 18).
3. Inboard rail to rear seat; secure with two bolts.

Tighten

- Inboard rail bolts to 20 N·m (15 lb.ft.).

4. Outboard rail to rear seat; secure with two bolts.

Tighten

- Rear seat outboard rail bolts to 25 N·m (19 lb.ft.).

- Feed rear seat latch cable through rear seat cushion trim cover and secure cover to seat with six screws.

5. Rear seat support rod to seat; secure with one pin and one clip.
6. Two cushion bumpers to seat; secure each with one screw.
7. Rear seat latch cable to outboard rail (Figure 17).
8. Rear bolt to recliner mechanism (Figure 17).

Tighten

- Rear seat recliner mechanism rear bolt to 20 N·m (15 lb.ft.).

9. Rear seat outboard latch cover to seat; secure with one screw.

- Press recliner mechanism lower trim cover onto recliner mechanism.

10. Rear seat to vehicle; secure with one front anchor bolt to each rear seat rail (Figure 16).

Tighten

- Rear seat front anchor bolts to 25 N·m (19 lb.ft.).

- Raise and support rear seat with support rod (Figure 8).

11. One rear anchor bolt to each rear seat rail.

Tighten

- Rear seat rear anchor bolts to 25 N·m (19 lb.ft.).

- Clip support rod to bottom of seat and lower seat.
- Raise rear seatback into upright position.
- Position carpet into place; secure with three snap clips.

Rear Seatback — LSi Models

Figures 8, 15, 16, 17 and 19

Remove or Disconnect

1. Three snap clips at the front of the rear floor carpet.

- Move carpet to reveal rear seat front anchor bolts (Figure 16).

2. One front anchor bolt from each rear seat rail.

- Fold rear seatback and raise rear seat.
- Unclip rear seat support rod from bottom of seat and support rear seat (Figure 8).

3. One rear anchor bolt from each rear seat rail and seat from vehicle.

- Gently pry rear seat recliner mechanism lower trim cover loose and remove from seat.

4. One screw and rear seat outboard rail trim cover from seat.
5. Rear bolt from recliner mechanism (Figure 17).
6. Rear seat latch cable from outboard rail (Figure 17).
7. One screw from each cushion bumper and two cushion bumpers from seat.
8. One clip, one pin and support rod from rear seat.
9. Six screws from rear seat cushion trim cover.

- Feed rear seat latch cable through rear seat cushion trim cover and remove cover from seat.

10. Forward bolt securing recliner mechanism to seat cushion (Figure 19).

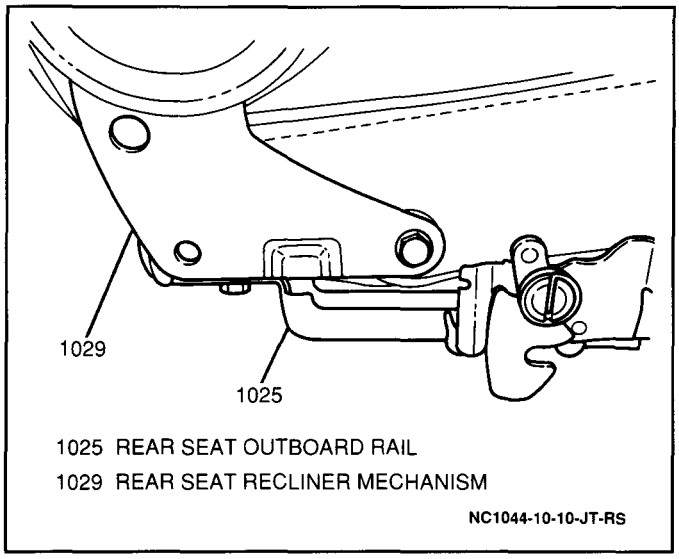

Figure 19 Recliner Mechanism Forward Bolt — LSi Models

11. E-ring from rear seat inboard hinge pin and seatback from seat cushion.

Install or Connect

1. Rear seatback to rear seat cushion.
2. E-ring to rear seat inboard hinge pin.
3. Forward bolt securing recliner mechanism to seat cushion (Figure 19).

Tighten

- Rear seat recliner mechanism forward bolt to 20 N·m (15 lb.ft.)

- Feed rear seat latch cable through rear seat cushion trim cover and secure cover to seat with six screws.

4. Rear seat support rod to seat; secure with one pin and one clip.
5. Two cushion bumpers to seat; secure each with one screw.
6. Rear seat latch cable to outboard rail (Figure 17).
7. Rear bolt to recliner mechanism (Figure 17).

Tighten

- Rear seat recliner mechanism rear bolt to 20 N·m (15 lb.ft.).

8. Rear seat outboard latch cover to seat; secure with one screw.

- Press rear seat recliner mechanism lower trim cover onto recliner mechanism.

9. Rear seat to vehicle; secure with one front anchor bolt to each rear seat rail (Figure 16).

Tighten

- Rear seat front anchor bolts to 25 N·m (19 lb.ft.).

- Raise and support rear seat with support rod (Figure 8).

10. One rear anchor bolt to each rear seat rail.

Tighten

- Rear seat rear anchor bolts to 25 N·m (19 lb.ft.).

- Clip support rod to bottom of seat and lower seat.
- Raise rear seatback into upright position.
- Reposition carpet; secure with three snap clips.

Rear Seatback Cover — LSi Models

Figures 8, 15, 16, 17 and 19

Remove or Disconnect

1. Three snap clips at the front of the rear floor carpet.

- Move carpet to reveal rear seat front anchor bolts (Figure 16).

2. One front anchor bolt from each rear seat rail.

- Fold rear seatback and raise rear seat.
- Unclip rear seat support rod from bottom of seat and support rear seat (Figure 8).

3. One rear anchor bolt from each rear seat rail and seat from vehicle.

- Gently pry recliner mechanism lower trim cover loose and remove from seat.

4. One screw and rear seat outboard rail trim cover from seat.
5. Rear bolt from recliner mechanism (Figure 17).
6. Rear seat latch cable from outboard rail (Figure 17).
7. One screw from each cushion bumper and two cushion bumpers from seat.
8. One clip, one pin and support rod from rear seat.
9. Six screws from rear seat cushion trim cover.

- Feed rear seat latch cable through rear seat cushion trim cover and remove cover from seat.

10. Forward bolt securing recliner mechanism to seat cushion (Figure 19).
11. E-ring from rear seat inboard hinge pin and seatback from seat cushion.

- Unscrew rear seatback lock knob counterclockwise and remove from seatback.
- Unzip seatback cover and slide off seatback frame.

Install or Connect

- Slide rear seatback cover onto seatback frame and zip cover closed.

1. One rear seatback lock knob to seatback, screw clockwise to secure.
2. Rear seatback to rear seat cushion.
3. E-ring to rear seat inboard hinge pin.
4. Forward bolt securing recliner mechanism to seat cushion (Figure 19).

Tighten

- Rear seat recliner mechanism forward bolt to 20 N·m (15 lb.ft.).

- Feed rear seat latch cable through rear seat cushion trim cover and secure cover to seat with six screws.

5. Rear seat support rod to seat; secure with one pin and one clip.
6. Two cushion bumpers to seat; secure each with one screw.
7. Rear seat latch cable to outboard rail (Figure 17).
8. Rear bolt to recliner mechanism (Figure 17).

Tighten

- Rear seat recliner mechanism rear bolt to 20 N·m (15 lb.ft.).

9. Rear seat outboard latch cover to seat; secure with one screw.
- Press rear seat recliner mechanism lower trim cover onto recliner mechanism.
10. Rear seat to vehicle; secure with one front anchor bolt to each rear seat rail (Figure 16).

Tighten

- Rear seat front anchor bolts to 25 N·m (19 lb.ft.).

- Raise and support rear seat with support rod (Figure 8).
11. One rear anchor bolt to each rear seat rail.

Tighten

- Rear seat rear anchor bolts to 25 N·m (19 lb.ft.).

- Clip support rod to bottom of seat and lower seat.
- Raise rear seatback into upright position.
- Reposition carpet; secure with three snap clips.

Rear Seat Cushion — LSi Models

Figures 8, 15, 16, 17 and 19

Remove or Disconnect

1. Three snap clips at the front of the rear floor carpet.
- Move carpet to reveal rear seat anchor bolts (Figure 16).
2. One front anchor bolt from each rear seat hinge.
- Fold rear seatback and raise rear seat.
- Unclip rear seat support rod from bottom of seat and support seat (Figure 8).
3. One rear anchor bolt from each rear seat rail and seat from vehicle.
- Gently pry recliner mechanism lower trim cover loose and remove from seat.
4. One screw and rear seat outboard rail trim cover from seat.
5. Rear bolt from recliner mechanism (Figure 17).
6. Rear seat latch cable from outboard rail (Figure 17).
7. One screw from each cushion bumper and two cushion bumpers from seat.
8. One clip, one pin and support rod from rear seat.
9. Six screws from rear seat cushion trim cover.
- Feed rear seat latch cable through rear seat cushion trim cover and remove cover from seat.
10. Forward bolt securing rear seat recliner mechanism to seat cushion (Figure 19).
11. E-ring from rear seat inboard hinge pin and seatback from seat cushion.

Install or Connect

1. Rear seatback to rear seat cushion.
2. E-ring to rear seat inboard hinge pin.
3. Forward bolt securing recliner mechanism to seat cushion (Figure 19).

Tighten

- Rear seat recliner mechanism forward bolt to 20 N·m (15 lb.ft.).

- Feed rear seat latch cable through rear seat cushion trim cover and secure cover to seat with six screws.
4. Rear seat support rod to seat; secure with one pin and one clip.
5. Two cushion bumpers to seat; secure each with one screw.
6. Rear seat latch cable to outboard rail (Figure 17).
7. Rear bolt to recliner mechanism (Figure 17).

Tighten

- Rear seat recliner mechanism rear bolt to 20 N·m (15 lb.ft.).

8. Rear seat outboard latch cover to seat; secure with one screw.
- Press recliner mechanism lower trim cover onto recliner mechanism.
9. Rear seat to vehicle; secure with one front anchor bolt to each rear seat rail.

Tighten

- Rear seat front anchor bolts to 25 N·m (19 lb.ft.).

- Raise and support seat with support rod (Figure 8).
10. One rear anchor bolt to each rear seat rail.

Tighten

- Rear seat rear anchor bolts to 25 N·m (19 lb.ft.).

- Clip support rod to bottom of seat and lower seat.
- Raise rear seatback into upright position.
- Reposition carpet; secure with three snap clips.

Rear Seat Cushion Cover — LSi Models

Figures 8, 15, 16, 17 and 19

Remove or Disconnect

1. Three snap clips at the front of the rear floor carpet.
- Move carpet to reveal rear seat anchor bolts (Figure 16).
2. One front anchor bolt from each rear seat rail.
- Fold rear seatback and raise rear seat.
- Unclip rear seat support rod from bottom of seat and support seat (Figure 8).
- Fold rear seatback, raise rear seat, unclip rear seat support rod from bottom of seat and support seat (Figure 8).
3. One rear anchor bolt from each rear seat rail and seat from vehicle.
- Gently pry recliner mechanism lower trim cover loose and remove from seat.
4. One screw and rear seat outboard rail trim cover from seat.
5. Rear bolt from recliner mechanism (Figure 17).
6. Rear seat latch cable from outboard rail (Figure 17).
7. One screw from each cushion bumper and two cushion bumpers from seat.
8. One clip, one pin and support rod from rear seat.
9. Six screws from rear seat cushion trim cover.
- Feed rear seat latch cable through rear seat cushion trim cover and remove cover from seat.
10. Forward bolt securing recliner mechanism to seat cushion (Figure 19).
11. E-ring from rear seat inboard hinge pin and seatback from seat cushion.

- Cut hog rings and remove rear seat cushion cover from seat cushion frame.

Install or Connect

1. Rear seat cushion cover to seat cushion frame; secure with hog rings.
2. Rear seatback to rear seat cushion.
3. E-ring to rear seat inboard hinge pin.
4. Forward bolt securing recliner mechanism to seat cushion (Figure 19).

Tighten

- Rear seat recliner mechanism forward bolt to 20 N·m (15 lb.ft.).

- Feed rear seat latch cable through rear seat cushion trim cover and secure cover to seat with six screws.

5. Rear seat support rod to seat; secure with one pin and one clip.
6. Two cushion bumpers to seat; secure each with one screw.
7. Rear seat latch cable to outboard rail (Figure 17).
8. Rear bolt to recliner mechanism (Figure 17).

Tighten

- Rear seat recliner mechanism rear bolt to 20 N·m (15 lb.ft.).

9. Rear seat outboard latch cover to seat; secure with one screw.

- Press recliner mechanism lower trim cover onto recliner mechanism.

10. Rear seat to vehicle; secure with one front anchor bolt to each rear seat rail.

Tighten

- Rear seat front anchor bolts to 25 N·m (19 lb.ft.).

- Raise and support rear seat with support rod (Figure 8).

11. One rear anchor bolt to each rear seat rail.

Tighten

- Rear seat rear anchor bolts to 25 N·m (19 lb.ft.).

- Clip support rod to bottom of seat and lower seat.
- Raise rear seatback into upright position.
- Reposition carpet; secure with three snap clips.

Rear Seat Cushion Trim Cover — LSi Models

Figures 8, 15, 16 and 17

Remove or Disconnect

1. Three snap clips at the front of the rear floor carpet.

- Move carpet to reveal rear seat anchor bolts (Figure 16).

2. One front anchor bolt from each rear seat rail.

- Fold rear seatback and raise rear seat.
- Unclip rear seat support rod from bottom of seat and support seat (Figure 8).

3. One rear anchor bolt from each rear seat rail and seat from vehicle.

- Gently pry recliner mechanism lower trim cover loose and remove from seat.

4. One screw and rear seat outboard rail trim cover from seat.
5. Rear bolt from recliner mechanism (Figure 17).
6. Rear seat latch cable from outboard rail (Figure 17).
7. One screw from each cushion bumper and two cushion bumpers from seat.
8. One clip, one pin and support rod from rear seat.
9. Six screws from rear seat cushion trim cover.

- Feed rear seat latch cable through rear seat cushion trim cover and remove cover from seat.

Install or Connect

- Feed rear seat latch cable through rear seat cushion trim cover and secure cover to seat with six screws.

1. Rear seat support rod to seat; secure with one pin and one clip.
2. Two cushion bumpers to seat; secure each with one screw.
3. Rear seat latch cable to outboard rail (Figure 17).
4. Rear bolt to recliner mechanism (Figure 17).

Tighten

- Rear seat recliner mechanism rear bolt to 20 N·m (15 lb.ft.).

5. Rear seat outboard latch cover to seat; secure with one screw.

- Press recliner mechanism lower trim cover onto recliner mechanism.

6. Rear seat to vehicle; secure with one front anchor bolt to each rear seat rail.

Tighten

- Rear seat front anchor bolts to 25 N·m (19 lb.ft.).

- Raise and support seat with support rod (Figure 8).

7. One rear anchor bolt to each rear seat rail.

Tighten

- Rear seat rear anchor bolts to 25 N·m (19 lb.ft.).

- Clip support rod to bottom of seat and lower seat.
- Raise rear seatback into upright position.
- Reposition carpet; secure with three snap clips.

Rear Seat Latch Striker — LSi Models

Figure 8

Remove or Disconnect

- Fold rear seatback and raise rear seat.
- Unclip rear seat support rod from bottom of seat and support seat (Figure 8).

1. Three snap clips at the front of the rear floor carpet.

- Move carpet to reveal latch striker mounting bolts.

2. Two mounting bolts and latch striker from vehicle.

Install or Connect

1. Rear seat latch striker to vehicle; secure with two mounting bolts.

Tighten

- Rear seat latch striker mounting bolts to 25 N·m (19 lb.ft.).

- Reposition carpet; secure with three snap clips.
- Clip support rod to bottom of seat and lower seat.
- Raise rear seatback into upright position.

SPECIFICATIONS

FASTENER TORQUES

Front Seat Anchor Bolts	25 N·m (19 lb.ft.)
Front Seatback-to-Front Seat Cushion Nut	15 N·m (11 lb.ft.)
Front Seat Recliner Mechanism-to-Front Seat Cushion Mounting Bolts	19 N·m (14 lb.ft.)
Front Seat Adjuster-to-Front Seat Cushion Bolts	25 N·m (19 lb.ft.)
Inboard Rail Bolts	20 N·m (15 lb.ft.)
Recliner Mechanism-to-Front Seatback Mounting Bolt	15 N·m (11 lb.ft.)
Rear Seat Belt Buckle-to-Rear Seat Belt Bolts	45 N·m (33 lb.ft.)
Rear Seat Front Anchor Bolts	25 N·m (19 lb.ft.)
Rear Seat Rear Anchor Bolts	25 N·m (19 lb.ft.)
Rear Seatback-to-Rear Seat Cushion Bolts	25 N·m (19 lb.ft.)
Rear Seat Latch Mounting Bolts	25 N·m (19 lb.ft.)
Rear Seat Latch Striker Mounting Bolts	25 N·m (19 lb.ft.)
Rear Seat Outboard Rail Bolts	25 N·m (19 lb.ft.)
Rear Seat Recliner Mechanism Rear Bolt	20 N·m (15 lb.ft.)
Rear Seat Recliner Mechanism Forward Bolt	20 N·m (15 lb.ft.)
Rear Seat Latch Striker Mounting Bolts	25 N·m (15 lb.ft.)

SERVICE PARTS INFORMATION

Component Name Used in Section 10-10	Reference Name in Service Parts Catalog	Group Number
Front Seatback	Cover, Seat Bk	16.724
Front Seatback Recliner Mechanism Handle	Knob, Seat Recl	16.682
Front Seatback Recliner Mechanism	Control, Seat Bk Recl	16.682
Front Seatback Recliner Mechanism Trim Cover	Cover, Seat Recl Tr	16.682
Front Seat Adjuster	Adjuster, Seat	16.682
Front Seat Adjuster Trim Cover	Cover, Seat Recl Upr Tr	16.682
Front Seat Cushion	Cover, Frt Seat Cush Tr	16.717
Front Seat Anchor Bolt Cover	Cover, F/Seat Adjr Tr	16.682
Guide Tube	Guide, F/Seat H/Rst	16.718
Head Restraint	Restraint, F/Seat Hd	16.718
Rear Seat Cushion	Cover, R/Seat Cush Tr	16.717
Rear Seat Cushion Trim Cover	Panel, R/Seat Cush Tr	16.716
Rear Seatback	Cover, R/Seat Bk	16.724
Rear Seatback Lock Knob	Knob, Rr Seat Recl Rel Cont	16.682
Rear Seat Release Handle	Handle, R/Seat Rel	16.682
Rear Seat Frame Hinge Cover	Cover, R/Seat Bk Frm Hge Arm	16.720
Rear Seat Hinge	Hinge, R/Seat	16.720
Rear Seat Hinge Cover	Cover, R/Seat Hge Tr	16.682
Rear Seat Latch	Lock, Fldg R/Seat Bk	16.720
Rear Seat Latch Striker	Striker, R/Seat Bk Lk	16.720
Rear Seat Support Rod	Rod, R/Seat Adjr Stop	16.715
Rear Seat Support Rod Striker	Striker/ R/Seat Bk Lk	16.720
Rear Seat Inboard Rail	Adjuster, R/Seat Inr	16.682
Rear Seat Inboard Rail Trim Cover	Cover, R/Seat Inr Adjr	16.682
Rear Seat Outboard Rail	Adjuster, R/Seat Otr	16.682
Rear Seat Outboard Latch Cover	Cover, R/Seat Adjr Otr	16.682
Recliner Mechanism	Control, R/Seat Bk Recl	16.682
Recliner Mechanism Lower Trim Cover	Cover, R/Seat Recl Lwr Cont	16.682
Recliner Mechanism Upper Trim Cover	Cover, R/Seat Recl Upr Cont	16.682
Rubber Bumpers	Bumper, R/Seat Cush	16.716

SECTION 10-11

SEAT BELTS

CAUTION: Replace belts, retractors, and hardware in use during all but minor collisions. Also, restraint systems should be replaced and anchorages properly repaired if they were in areas damaged by a collision, whether the belt was in use or not. If there is any question, replace the belt system. Damage to the belt system, whether visible or not, could result in serious personal injury in the event of an accident.

NOTICE: When fasteners are removed, always reinstall them at the same location from which they were removed. If a fastener needs to be replaced, use the correct part number fastener for that application. If the correct part number fastener is not available, a fastener of equal size and strength (or stronger) may be used. Fasteners that are not reused, and those requiring thread-locking compound, will be called out. The correct torque values must be used when installing fasteners that require them. If the above procedures are not followed, parts or system damage could result.

CONTENTS

General Description 10-11-1
Active Three-Point Seat Belts 10-11-1
On-Vehicle Service 10-11-1
Operational and Functional Checks 10-11-2
Running Test (E-ALR Seat Belts) 10-11-2
Static Test 10-11-2
Front Seat Belt Retractor Mechanism 10-11-4
Front Seat Belt Buckle 10-11-4
Rear Seat Belt Retractor Mechanism — Hardtop Models 10-11-5
Rear Seat Belt Retractor Mechanism — Convertible Models 10-11-6
Rear Seat Belt Buckle — Base Models 10-11-7
Rear Seat Belt Buckle — LSi Models 10-11-9
Specifications 10-11-10
Fastener Torques 10-11-10
Service Parts Information 10-11-10

GENERAL DESCRIPTION

ACTIVE THREE-POINT SEAT BELTS

Each seat belt system (left- and right-side) consists of one belt, a retractor mechanism, a seat belt guide loop, a buckle and a latch. The two lap support points are secured to the vehicle by lower anchor bolts (outboard) and at the buckle (inboard). The shoulder support point is secured to the vehicle at the seat belt guide loop.

The left-side front seat belt incorporates an emergency locking retractor (ELR), which is designed to lock the seat belt webbing in place during emergency vehicle maneuvers. During all normal driving conditions, however, the seat belt is free to unwind and the driver is provided with more than sufficient freedom of movement to operate all vehicle controls and accessories.

The front and rear passenger seat belts incorporate an emergency-auto locking retractor (E-ALR). This type of retractor is identical in operation to the ELR until the seat belt is pulled out to its full length. Once the seat belt has been pulled completely out of the retractor, the E-ALR automatically locks the webbing into any position to which the belt is allowed to retract. Once the E-ALR function has been initiated (by pulling the belt all the way out), the belt can only be unlocked by allowing the webbing to be completely wound back into the retractor. After the seat belt has been unlocked, it can be pulled out normally, and the E-ALR again operates identically to the ELR (unless the belt is again pulled all the way out). The ELR and E-ALR systems will lock the seat belt webbing under the following conditions:

- When the belt is pulled rapidly from the retractor.
- When the vehicle is accelerating or decelerating.
- When the vehicle is inclined.
- If the webbing is pulled all the way out and then allowed to retract. At this time the system will not allow the webbing to be pulled out any further until it is fully retracted.

ON-VEHICLE SERVICE

CAUTION: The following precautions must be observed to avoid damage to the seat belt system. If these precautions are not taken, the seat belt system may not provide proper restraint in the unlikely event of an accident and may result in personal injury.

- **Keep any sharp and potentially damaging objects away from the belts.**
- **Avoid bending or damaging any portion of the buckle.**
- **Do not bleach or dye belt webbing (use only mild soap and water).**
- **When installing seat belt anchor bolts, start bolts by hand to prevent cross-threading.**
- **Do not attempt any repairs on retractor mechanisms or covers. Replace defective assemblies with new ones.**
- **Replace any belts that are cut or damaged in any way.**

- **Do not install anything in trim panel that will obstruct the movement of the seat belt.**

OPERATIONAL AND FUNCTIONAL CHECKS

Inspect

- All seat belt anchor bolts to verify that they are secure.
- Seat belt buckle, making sure it locks and unlocks easily.
- After buckling seat belt, tug sharply on belt, checking that the buckle remains locked.
- Fully extend seat belt to make sure there are no twists or tears in it.
- Allow the seat belt to fully retract to make sure it does so easily.

Running Test (E-ALR Seat Belts)

CAUTION: Conduct this test only in a safe area. Do not conduct this test on the open road. A large empty parking lot is suitable.

1. Fasten seat belt.
2. Drive vehicle at 16 km/h (10 mph) and apply brakes firmly.
3. Verify that the seat belt locks and does not allow your body to move forward.
4. If the belt does not lock during the running test, remove retractor and perform the static test.

Static Test

Figure 1

1. Remove retractor mechanism. Refer to "Front Seat Belt Retractor Mechanism", "Rear Seat Belt Retractor Mechanism — Hardtop Models" or "Rear Seat Belt Retractor Mechanism — Convertible Models" later in this section.
2. Tilt the retractor slowly.
3. Verify that the belt can be pulled out of the retractor at an inclination of 15 degrees or less and that it cannot be pulled out at over 45 degrees of inclination (Figure 1).

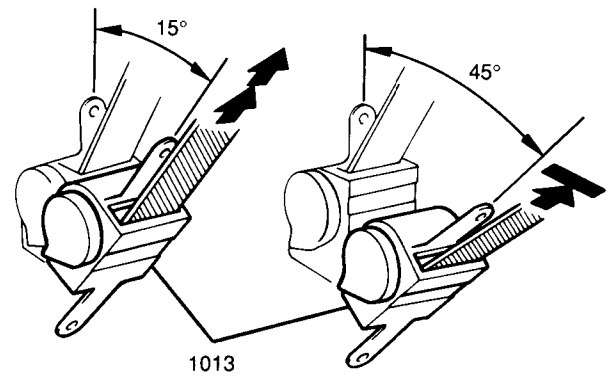

1013 SEAT BELT RETRACTOR – TYPICAL

NC1190-10-11-JT-RS

Figure 1 Static Test

4. If a problem is found, replace the retractor mechanism.

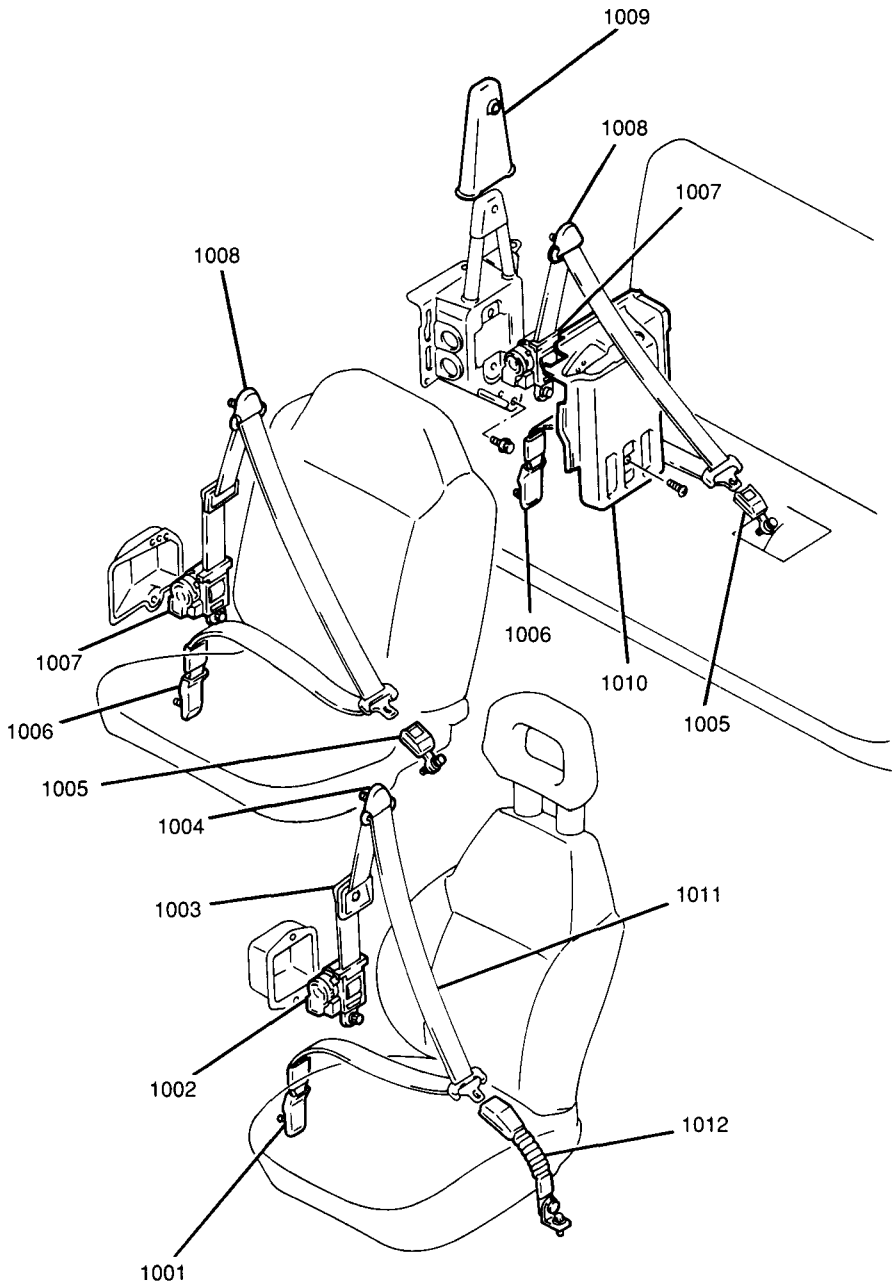

1001 FRONT SEAT BELT LOWER ANCHOR BOLT COVER
1002 FRONT SEAT BELT RETRACTOR MECHANISM
1003 FRONT SEAT BELT TRIM BEZEL
1004 FRONT SEAT BELT GUIDE LOOP COVER
1005 REAR SEAT BELT BUCKLE
1006 REAR SEAT BELT LOWER ANCHOR BOLT COVER
1007 REAR SEAT BELT RETRACTOR MECHANISM
1008 REAR SEAT BELT GUIDE LOOP COVER
1009 REAR SEAT BELT SHOULDER BRACKET COVER
1010 REAR SEAT BELT RETRACTOR TRIM COVER
1011 FRONT SEAT BELT
1012 FRONT SEAT BELT BUCKLE

NC1180-10-11-JT-RS

Figure 2 Front and Rear Seat Belt Systems

FRONT SEAT BELT RETRACTOR MECHANISM

Figures 2 through 5

Remove or Disconnect

- Lift front seat belt lower anchor bolt cover and remove anchor bolt (Figure 3).

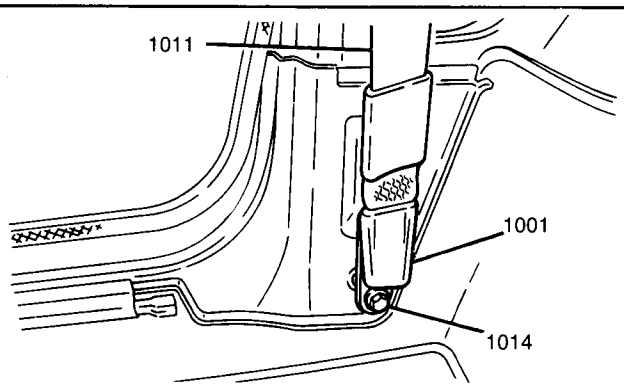

1001 FRONT SEAT BELT LOWER ANCHOR BOLT COVER
1011 FRONT SEAT BELT
1014 FRONT SEAT BELT LOWER ANCHOR BOLT
NC8828-10-11-JT-RS

Figure 3 Front Seat Belt Lower Anchor Bolt

1. Front seat belt guide loop cover and anchor bolt.
2. One screw from front seat belt trim bezel (Figure 4).

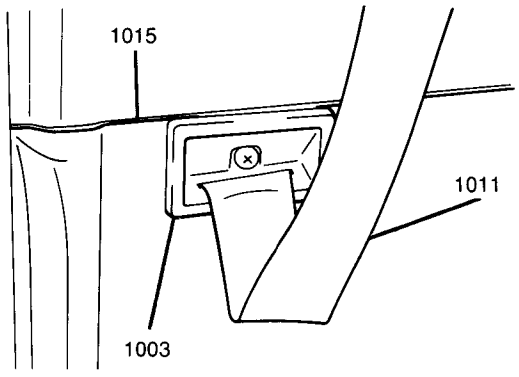

1003 FRONT SEAT BELT TRIM BEZEL
1011 FRONT SEAT BELT
1015 REAR QUARTER INTERIOR TRIM PANEL
NC8822-10-11-JT-RS

Figure 4 Front Seat Belt Trim Bezel

- Pull rear quarter interior trim panel from vehicle, disengaging plastic clips (Figure 5).

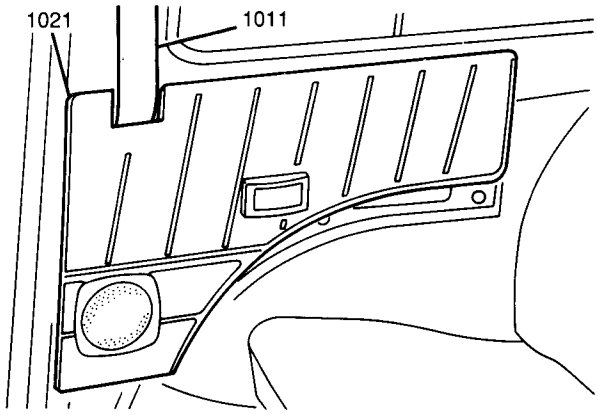

1011 FRONT SEAT BELT
1021 REAR QUARTER INTERIOR TRIM PANEL
NC8850-10-11-JT-RS

Figure 5 Rear Quarter Interior Trim Panel

3. One mounting bolt and front seat belt retractor mechanism from vehicle.

Install or Connect

1. Front seat belt retractor mechanism to vehicle; secure with one mounting bolt.

   Tighten

   - Front seat belt retractor mechanism mounting bolt 45 N·m (33 lb.ft.).
2. Rear quarter interior trim panel to vehicle; press into place,engaging plastic clips (Figure 5).
3. Front seat belt trim bezel to vehicle; secure with one screw (Figure 4).
4. Front seat belt guide loop anchor bolt.

   Tighten

   - Front seat belt guide loop anchor bolt to 45 N·m (33 lb.ft.).
5. Front seat belt guide loop cover.
6. Front seat belt lower anchor bolt (Figure 3).

   Tighten

   - Front seat belt lower anchor bolt to 45 N·m (33 lb.ft.).

- Position front seat belt lower anchor bolt cover into place.

Front Seat Belt Buckle

Figures 2 and 6

Remove or Disconnect

- Lift front seat belt buckle anchor bolt cover (Figure 6).

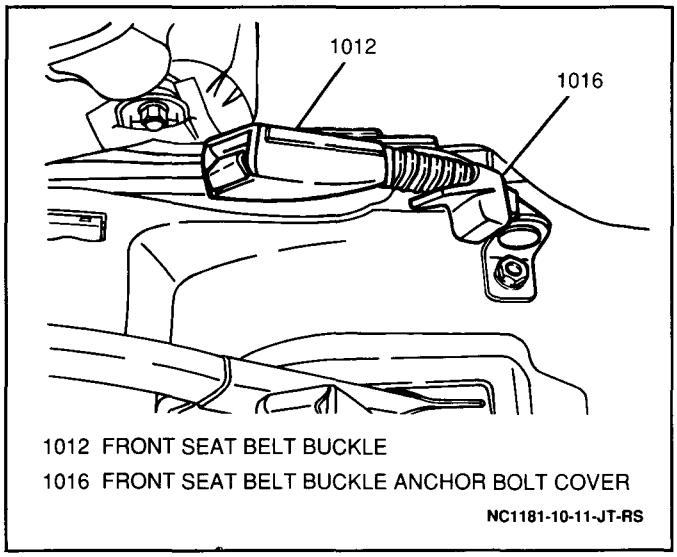

Figure 6 Front Seat Belt Buckle Anchor Bolt

1. Front seat belt buckle anchor bolt.
2. Front seat belt buckle electrical connector (left side).
3. Front seat belt buckle from vehicle.

Install or Connect

1. Front seat belt buckle electrical connector (left side).
2. Front seat belt buckle to vehicle; secure with one anchor bolt (Figure 6).

Tighten

- Front seat belt buckle anchor bolt to 45 N·m (33 lb.ft.).

- Lower front seat belt buckle anchor bolt cover into place.

REAR SEAT BELT RETRACTOR MECHANISM — HARDTOP MODELS

Figures 2, 7, 8 and 9

Remove or Disconnect

1. Rear seat belt guide loop cover and anchor bolt.
- Loosen rear door opening weatherstrip.
2. Two plastic retaining clips and rear seat belt retractor trim panel from vehicle (Figure 7).

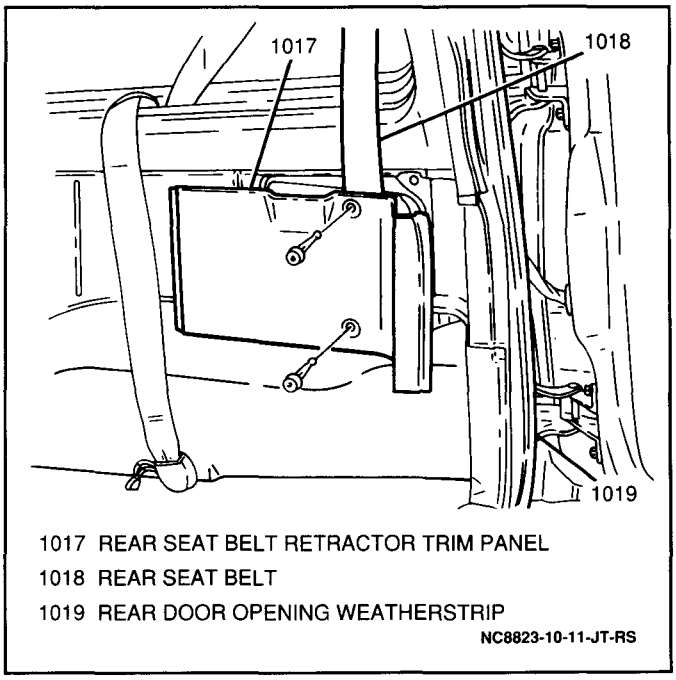

Figure 7 Rear Seat Belt Retractor Trim Panel — Hardtop Models

- Fold rear seatback, pull rear seat release handle and raise rear seat.
- Unclip support rod from bottom of rear seat and support seat.
- Lift rear seat belt lower anchor bolt cover and remove anchor bolt (Figure 8).

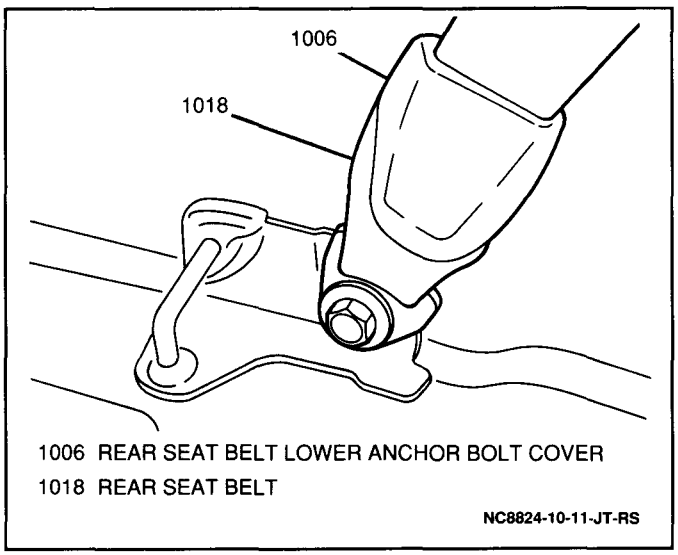

Figure 8 Rear Seat Belt Lower Anchor Bolt

3. One bolt, one screw and rear seat belt retractor mechanism from vehicle (Figure 9).

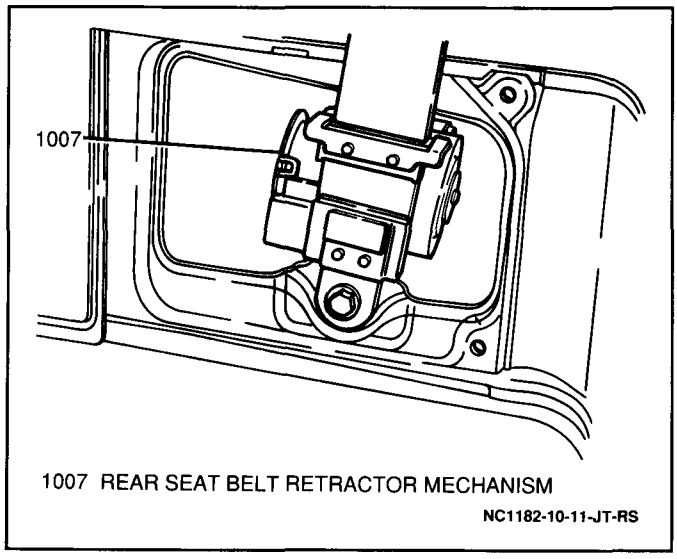

Figure 9 Rear Seat Belt Retractor Mechanism — Hardtop Models

Install or Connect

1. Rear seat belt retractor mechanism to vehicle; secure with one screw and one bolt (Figure 9).

   Tighten

   - Rear seat belt retractor mechanism bolt to 45 N·m (33 lb.ft.).

2. Rear seat belt lower anchor bolt (Figure 8).

   Tighten

   - Rear seat belt lower anchor bolt to 45 N·m (33 lb.ft.).

- Position rear seat belt lower anchor bolt cover into place.
- Clip support rod to bottom of rear seat and lower seat.
- Raise rear seatback into upright position.

3. Rear seat belt retractor trim panel to vehicle; secure with two plastic retaining clips (Figure 7).

- Press rear door opening weatherstrip into place.

4. Rear seat belt guide loop anchor bolt.

   Tighten

   - Rear seat belt guide loop anchor bolt to 45 N·m (33 lb.ft.).

5. Rear seat belt guide loop cover.

REAR SEAT BELT RETRACTOR MECHANISM — CONVERTIBLE MODELS

Figures 8, 10, 11, 12 and 13

Remove or Disconnect

- Fold rear seatback, pull rear seat release handle and raise rear seat.
- Unclip support rod from bottom of rear seat and support seat.
- Lift rear seat belt lower anchor bolt cover and remove anchor bolt (Figure 8).

1. Two screws and rubber stopper from rear seat belt retractor trim cover (Figure 10).

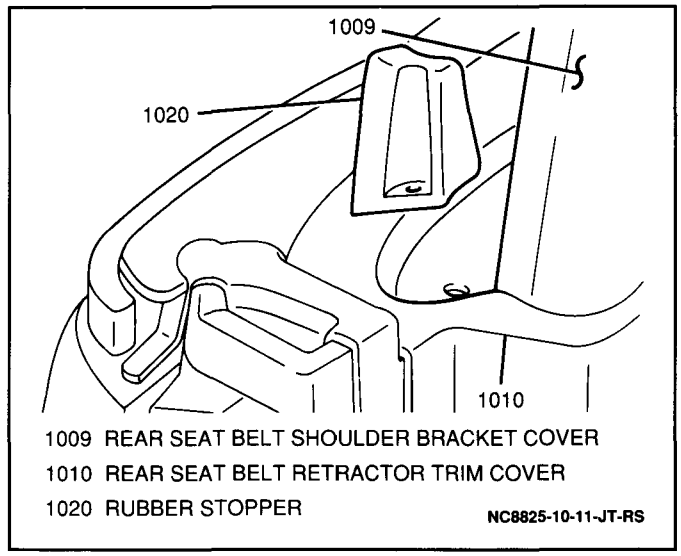

Figure 10 Rubber Stopper — Convertible Models

2. Rear seat belt guide loop cover and anchor bolt (Figure 11).

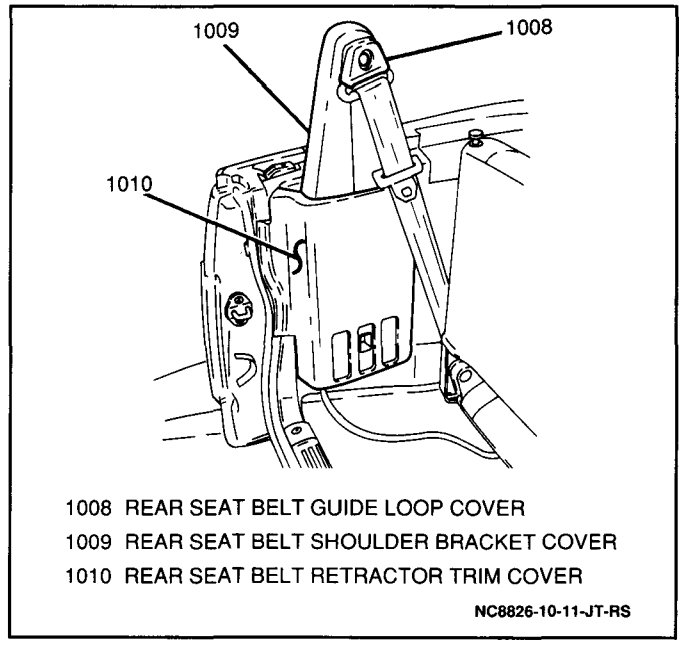

Figure 11 Rear Seat Belt Guide Loop Anchor Bolt Location — Convertible Models

- Loosen rear door opening weatherstrip.

3. One screw and rear seat belt retractor trim cover (Figure 12).

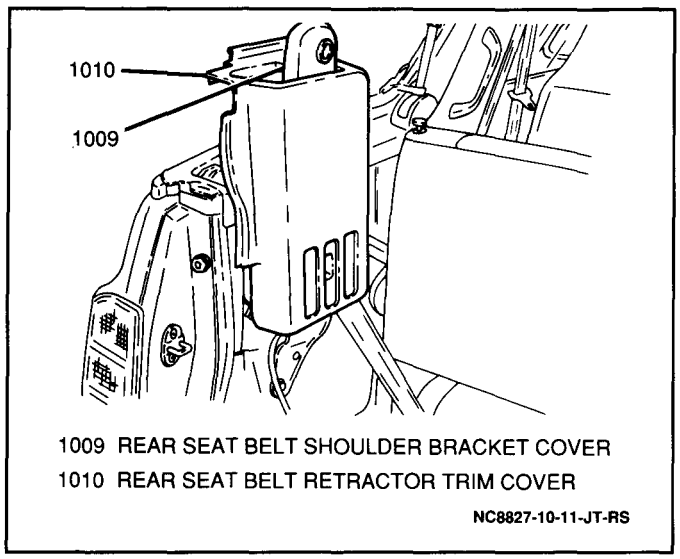

Figure 12 Rear Seat Belt Retractor Trim Cover — Convertible Models

4. One bolt, one screw and rear seat belt retractor mechanism from vehicle (Figure 13).

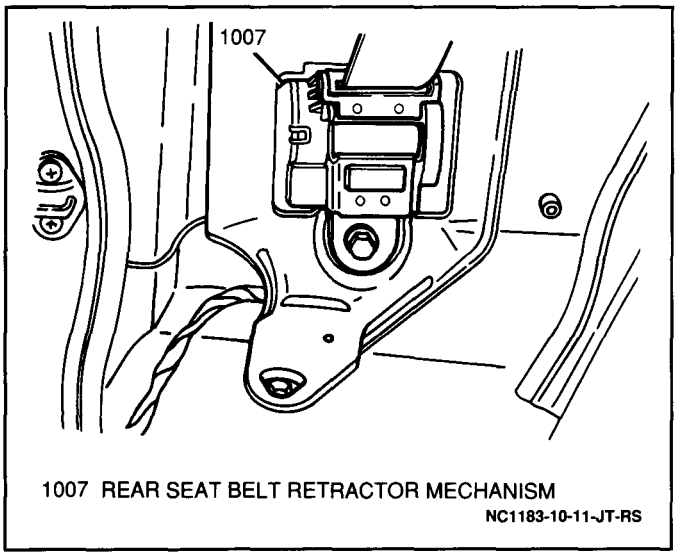

Figure 13 Rear Seat Belt Retractor — Convertible Models

Install or Connect

1. Rear seat belt retractor mechanism to vehicle; secure with one screw and one bolt (Figure 13).

Tighten

- Rear seat belt retractor mechanism bolt to 45 N·m (33 lb.ft.).

2. Rear seat belt retractor trim cover to vehicle; secure with one screw (Figure 12).

- Press rear door opening weatherstrip into place.

3. Rear seat belt guide loop anchor bolt (Figure 11).

Tighten

- Rear seat belt guide loop anchor bolt to 45 N·m (33 lb.ft.).

4. Rear seat belt guide loop cover.
5. Rubber stopper to rear seat belt retractor trim cover; secure with two screws (Figure 10).
6. Rear seat belt lower anchor bolt (Figure 8).

Tighten

- Rear seat belt lower anchor bolt to 45 N·m (33 lb.ft.).

- Position rear seat belt lower anchor bolt cover into place.
- Clip support rod to bottom of rear seat and lower seat.
- Raise rear seatback into upright position.

Rear Seat Belt Buckle — Base Models

Figures 2 and 14 through 19

Remove or Disconnect

- Fold rear seatback, pull rear seat release handle and raise rear seat.
- Unclip support rod from bottom of rear seat and support seat.

1. One rear anchor bolt from each rear seat hinge (Figure 14).

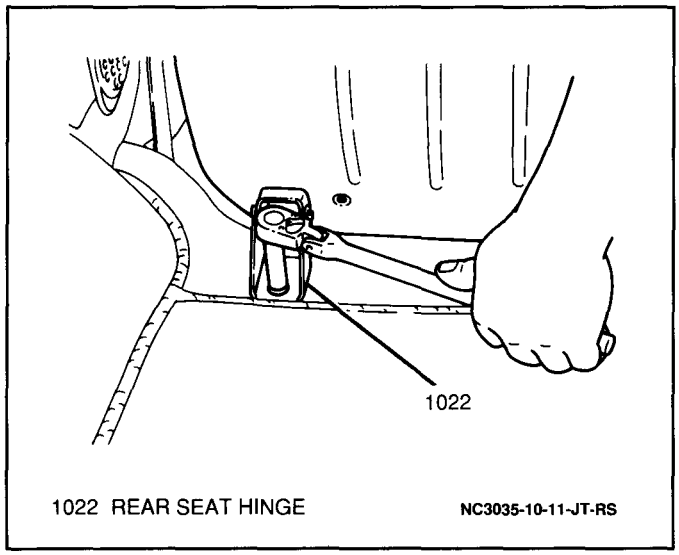

Figure 14 Rear Seat Rear Anchor Bolt Removal — Base Models

- Lower rear seat.
- Gently pry hinge cover from each rear seat hinge (Figure 15).

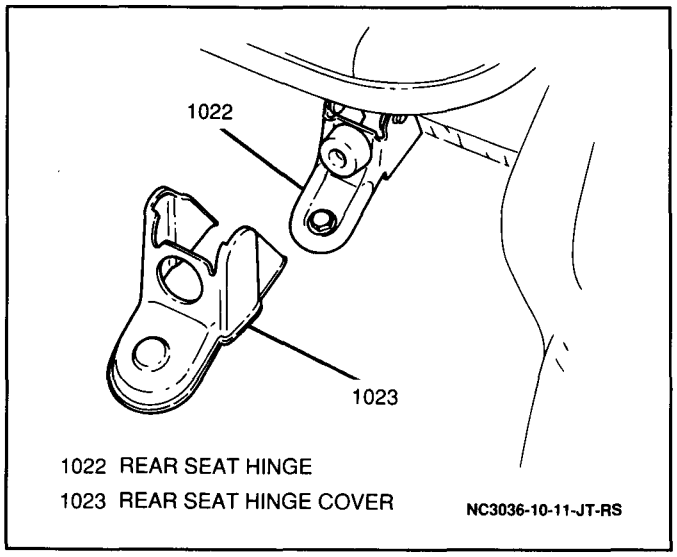

Figure 15 Rear Seat Hinge Cover — Base Models

2. One front anchor bolt from each rear seat hinge and seat from vehicle (Figure 16).

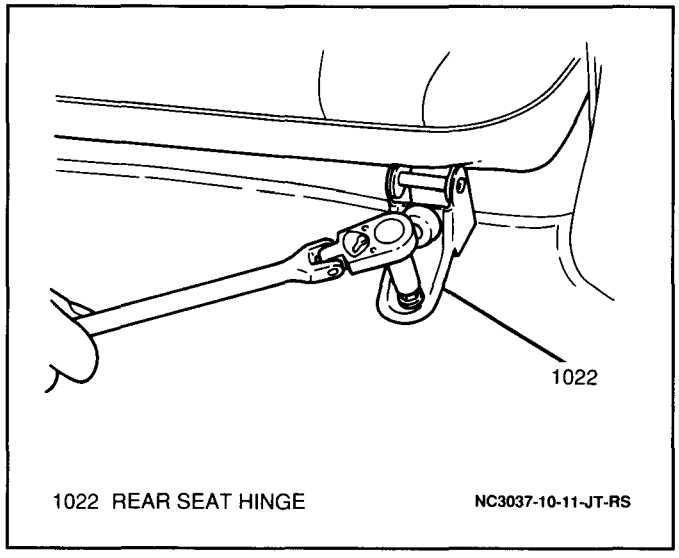

Figure 16 Removing Rear Seat Front Anchor Bolt — Base Models

3. One clip and pin from each rear seat hinge and hinges from seat (Figure 17).

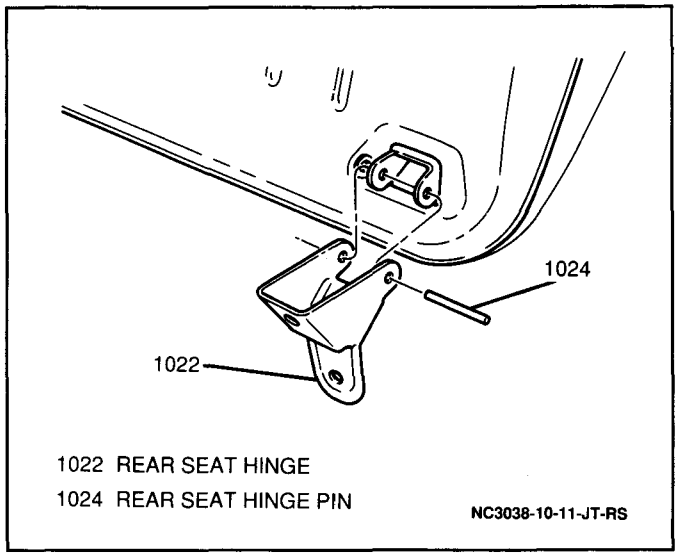

Figure 17 Rear Seat Hinge

4. One clip, pin and support rod from rear seat.
5. One clip, pin and rear seat release handle from seat.
6. One screw from each rubber bumper and bumpers from seat.
7. Six screws and rear seat cushion trim cover from rear seat.
8. One anchor bolt from bottom of rear seat cushion securing rear seat belt buckle to seat (Figure 18).

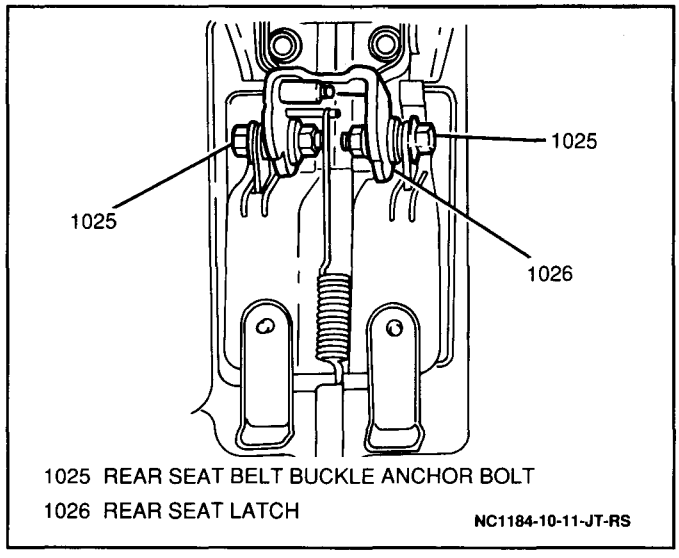

Figure 18 Rear Seat Belt Buckle Anchor Bolt Location — Base Models

9. Rear seat belt buckle from seat (Figure 19).

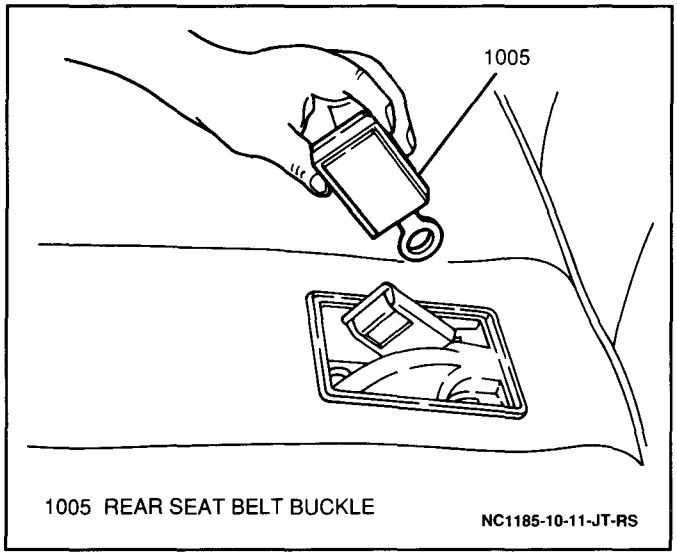

Figure 19 Removing Rear Seat Belt Buckle

Install or Connect

1. Rear seat belt buckle to rear seat; secure with one anchor bolt (Figure 18).

Tighten

- Rear seat belt buckle anchor bolt to 45 N·m (33 lb.ft.).

2. Rear seat cushion trim cover to rear seat; secure with six screws.
3. Rubber bumpers to seat; secure each with one screw.
4. Rear seat release handle; secure with one pin and clip.
5. Support rod to rear seat; secure with one pin and clip.
6. Rear seat hinges to seat; secure each with one pin and clip (Figure 17).
7. Rear seat to vehicle; secure with one front anchor bolt to each rear seat hinge.

Tighten

- Rear seat front anchor bolts to 25 N·m (19 lb.ft.).

8. Hinge cover to each rear seat hinge (Figure 15).

- Raise rear seat and support with rear seat support rod.

9. One rear anchor bolt to each rear seat hinge.

Tighten

- Rear seat rear anchor bolts to 25 N·m (19 lb.ft.).

- Clip support rod to bottom of rear seat and lower seat.
- Raise rear seatback into upright position.

Rear Seat Belt Buckle — LSi Models

Figures 2 and 20

Remove or Disconnect

1. Three snap clips at the front of the rear floor carpet.

- Move carpet back to reveal rear seat front anchor bolts.

2. Two front anchor bolts.

- Release rear seat latch from striker and remove rear seat from vehicle.
- Gently pry recliner mechanism lower trim cover loose and remove from seat.

3. One screw and rear seat outboard latch cover from seat.
4. Rear bolt from recliner mechanism (Figure 20).

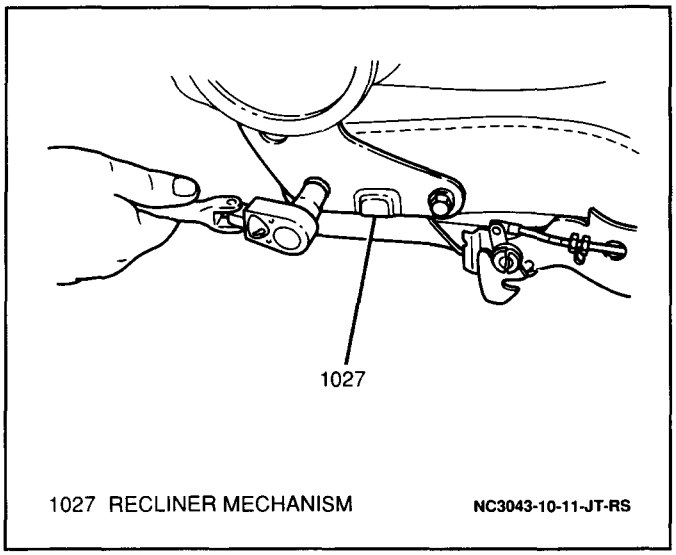

Figure 20 Removing Recliner Mechanism Rear Bolt — LSi Models

5. Latch cable from outboard rail (Figure 20).
6. One screw from each cushion bumper and two cushion bumpers from seat.
7. One clip, pin and support rod from rear seat.
8. Six screws from rear seat bottom trim cover.

- Feed latch cable through bottom trim cover and remove cover from seat.

9. Rear seat belt buckle anchor bolt and remove buckle from rear seat.

Install or Connect

1. Rear seat belt buckle to rear seat; secure with one bolt.

Tighten

- Rear seat belt buckle anchor bolt to 45 N·m (33 lb.ft.).

- Feed latch cable through rear seat bottom trim cover and secure cover to seat with six screws.

2. Rear seat support rod to seat; secure with one pin and clip.
3. Two cushion bumpers to seat; secure each with one screw.
4. Latch cable to outboard rail.
5. Rear bolt to recliner mechanism.

Tighten

- Rear seat recliner mechanism rear bolt to 20 N·m (15 lb.ft.).

6. Rear seat outboard latch cover to seat; secure with one screw.
   - Press recliner mechanism lower trim cover onto recliner mechanism.
7. Rear seat to vehicle; secure with two front anchor bolts.

Tighten

- Rear seat front anchor bolts to 25 N·m (19 lb.ft.).
- Rear seat latch to rear seat latch striker.
- Position carpet into place; secure with three snap clips.

SPECIFICATIONS

FASTENER TORQUES

Front Seat Belt Retractor Mechanism Mounting Bolt	45 N·m (33 lb.ft.)
Front Seat Belt Guide Loop Anchor Bolt	45 N·m (33 lb.ft.)
Front Seat Belt Lower Anchor Bolt	45 N·m (33 lb.ft.)
Front Seat Belt Buckle Anchor Bolt	45 N·m (33 lb.ft.)
Rear Seat Belt Guide Loop Anchor Bolt	45 N·m (33 lb.ft.)
Rear Seat Belt Retractor Mechanism Bolt	45 N·m (33 lb.ft.)
Rear Seat Belt Lower Anchor Bolt	45 N·m (33 lb.ft.)
Rear Seat Belt Buckle Anchor Bolt	45 N·m (33 lb.ft.)
Rear Seat Front Anchor Bolts	25 N·m (19 lb.ft.)
Rear Seat Rear Anchor Bolts	25 N·m (19 lb.ft.)
Rear Seat Recliner Mechanism Rear Bolt	20 N·m (15 lb.ft.)

SERVICE PARTS INFORMATION

Component Name Used in Section 10-11	Reference Name in Service Parts Catalog	Group Number
Front Seat Belt Retractor Mechanism	Belt Asm, Frt St	16.714
Rear Seat Belt Retractor Mechanism	Belt Asm, Rr St	16.714
Rear Seat Belt Retractor Trim Cover (Convertible Models)	Trim, Rr Shoulder Anchor Lwr	16.714
Rear Seat Shoulder Bracket Cover	Cover, Shoulder Anchor	16.714

A

A/C Amplifier 1B-7,1B-39
A/C Compressor Clutch 1B-4,1D-3
A/C Compressor Clutch Relay 1B-7,1B-31
A/C Condenser Fan Relay 1B-7,1B-31
A/C Diagnosis General Information 1B-10
A/C Electrical System Diagnosis 1B-18
A/C Engine Coolant Temperature (ECT) Switch 1B-7,1B-40,6B-3
A/C Switch 1B-8,1B-31
A/C Switches, Relays and Sensors 1B-7
A/C System Components 1B-4
Abbreviations Charts 0A-16
Accelerator Control Cable Adjustment 6C-13
Accelerator Control Cable Replacement .. 6C-12
Accelerator Controls 6C-5
Accelerator Pedal Replacement 6C-13
Active Three-Point Seat Belts 10-11-1
Adding Oil, Evacuating and Charging the Refrigeration System 1B-25
Adhesive Moldings 10-1-3
Adhesive Service Kit 10-2-1,10-7-8
Adjustable Belt Tension Specifications ... 0B-10
Air Cleaner (ACL) 6A1-8
Air Cleaner (ACL) Element 6A1-7
Air Cleaner (ACL) Filter Replacement 0B-8
Air Conditioner Controls 1B-8
Air Conditioning Refrigerant Recovery, Recycling and (ACR^3) Station Set-Up .. 1B-20
Air Distribution System 1A-2,1B-2
Air Ducts and Deflector Outlets 1B-40
Air Intake Case 6A1-7
Alcohol-in-Fuel 6C-5
Alignment Checking 10-3-1
Alignment Specifications 3A-5
All Season Tires 3E-2
AM Radio Reception 9A-1
Antenna 9A-8
Anti-Chip Coating Material 10-1-9
Anticorrosion Material 10-5-1
Anticorrosion Treatment 10-1-8
Ashtray 8C-2
Ashtray Illumination Lamp 8B-2
Assembling and Coding Lock Cylinders 0A-9
Audio Alarm Module 8C-1,8C-14

B

B-Pillar Lower Trim Panel 10-7-5
B-Pillar Upper Trim Panel 10-7-5
Backing Plate 5C1-6
Backup Lamp Switch 7B-21
Backup Lamps 8B-2,8B-5
Balancing Tire and Wheel 3E-7
Basecoat Application — Polyurethane Enamel 10-1-11
Basecoat/Clearcoat Preparation 10-1-11
Battery 6D1-1,6D1-10
Battery Cable Replacement and Routing 6D1-10
Battery Carrier 10-5-4
Battery Charging 6D1-6
Battery Electrical Drain 6D1-5
Battery Failure, Common Causes of 6D1-2
Battery Ratings 6D1-2
Battery Testing 6D1-4
Battery Usage Chart 6D1-13
Bleeding Power Steering System 3B1-4
Blower Motor 1A-14
Blower Motor Case 1A-7
Blower Motor Resistor 1A-15
Blower Noise 1A-7,1B-18
Blower Speed Control Lever 1B-8

Blower Speed Selector Lever 1A-2
Blower Speed Selector Switch 1A-15
Body Construction, General 10-3-1
Body Panel Adjustment
and Alignment 10-1-22
Brake Booster Adjustment 5D1-3
Brake Booster Assembly 5D1-1
Brake Booster Unit Repair 5D1-5
Brake Fluid 5-7
Brake Fluid, Substandard
or Contaminated 5-2,5A-2
Brake Fluid and Fluid Handling 5-2,5A-2
Brake Fluid Leaks 5-6
Brake Fluid Level Switch 5A-2,5A-3
Brake Fluid Pressure Differential
Switch 5-7,5A-2
Brake Hose and Pipe Inspection 5-7,5-9
Brake Hydraulic System, Flushing 5-16
Brake Hydraulic System,
Manual Bleeding 5-14
Brake Hydraulic System,
Pressure Bleeding 5-16
Brake Pad Inspection 5B1-1
Brake Pads 5B1-5
Brake Pedal 5-7
Brake Pedal Free Height Adjustment 5-6
Brake Pedal Travel 5-6
Brake Performance, External Conditions
That Affect 5-3
Brake Pipes, Hoses and Fittings 5-9
Brake Rotor 5B1-7
Brake Rotor, Refinishing 5B1-9
Brake Rotor Inspection 5B1-2
Brake Rotor Tolerance
and Surface Finish 5B1-2
Brake System Diagnosis 5-3
Brake System Testing 5-3
Brake Transmission Shift
Interlock (BTSI) 7A-12
Brake Warning System Operation 5E-2
"BRAKE" Indicator 5-2,5E-2,5F-2,5F-5
Braking, Normal and Antilock 5E-1
Built-In Hydrometer 6D1-3
Bulb Usage Charts 8B-17
Bumper Energy Absorber, Front 10-4-3
Bumper Fascia, Front 10-4-2
Bumper Fascia, Rear 10-4-4
Bumper Impact Bar, Front 10-4-3
Bumper Impact Bar, Rear 10-4-5
Bumpers 10-4-1
Burnishing Brake Pads and Rotors 5B1-6
Bus Bar Lead Terminal Repair 10-2-12

C

Caliper 5B1-1,5B1-4
Caliper Carrier 5B1-6
Caliper Unit Repair 5B1-9
Camber 3A-2,3A-4
Camshaft 6A1-23
Carrier and Hold Down 6D1-3,6D1-10
Case Porosity Repair,
Automatic Transmission 7A-10
Case Porosity Repair,
Manual Transmission 7B-16
Case Porosity Repair, Transfer 7D-9
Cassette Tape Player
and Cassette Diagnosis 9A-6
Caster 3A-1,3A-4
Chassis Lubrication 0B-5
Check Valve Hose 5D1-2
Cigar Lighter 8C-2
Cigar Lighter Illumination Lamp 8B-2
Clearcoat Application — Polyurethane
Enamel 10-1-12

Clearcoat Repair Without Repainting ... 10-1-10
Clutch Cable ... 7C-11
Clutch Checks, Preliminary ... 7C-3
Clutch Operating Members ... 7C-3
Clutch Pedal Assembly ... 7C-6
Clutch Pedal Free Travel Adjustment ... 7C-9
Clutch Pedal Free Travel
Inspection/Adjustment ... 0B-5
Clutch Pedal Height Adjustment ... 7C-9
Clutch Pedal Position (CPP)
Switch ... 7C-3,7C-10
Clutch Pilot Bearing ... 7C-15
Clutch Principal Components ... 7C-3
Clutch Release Bearing ... 7C-16
Clutch Release Shaft and Bushings ... 7C-16
Clutch Spin Down Time ... 7B-12,7C-4
Coast Test, Propeller Shaft Diagnosis ... 4A-3
Coil Spring, Front ... 3C-4
Coil Spring, Rear ... 3D-4
Cold Cranking Amperage ... 6D1-2
Combination Switch Diagnosis ... 3-4
Combination Switch, Standard Column ... 3F1-3
Combination Switch, Tilt Column ... 3F2-3
Compression Test ... 6-5
Compressor ... 1B-4,1B-33
Compressor Diagnosis ... 1D-1
Compressor Drive Belt Inspection
and Adjustment ... 1B-28
Compressor Leak Test ... 1D-14
Compressor Mounting Brackets ... 1B-34
Compressor Overhaul ... 1D-7
Condenser ... 1B-4,1B-31
Condenser Fan ... 1B-4
Connecting Rod Bearing Noise ... 6-4
Connecting Rods ... 6A1-3,6A1-40,6A1-47
Console Box ... 8C-3
Control, Temperature
and Fresh/Recirc Cables ... 1A-15
Control Arm and Ball Joint ... 3C-7
Control Arm Bushings ... 3C-8
Controls, Heater System ... 1A-1
Coolant Concentration, Testing ... 6B-4
Coolant Concentration Testers ... 6B-4
Coolant Hoses and Pipes ... 6B-16
Coolant Pump ... 6B-4,6B-13
Coolant Reservoir ... 6B-3,6B-14
Cooling Fan ... 6B-19
Cooling System Cleaning ... 6B-6
Cooling System Diagnostic Charts ... 6B-7
Cooling System Flushing ... 6B-11
Cooling System Service ... 0B-7
Corrosion Repair ... 10-1-9
Cowl Vent Grilles ... 10-5-9
Cracked, Scored or Grooved Drum ... 5C1-8
Cranking Circuit ... 6D2-1
Crankshaft ... 6A1-3,6A1-59
Cutting Keys ... 0A-9
Cylinder Block ... 6A1-3,6A1-56
Cylinder Block Plug ... 6B-4
Cylinder Head ... 6A1-2,6A1-23
Cylinder Head and Valve
Off-Vehicle Service ... 6A1-26
Cylinder Head Cover ... 6A1-12
Cylinders ... 6A1-46

D

Daytime Running Lights (DRL) ... 8B-2
Daytime Running Lights (DRL) Controller 8B-6
Daytime Running Lights (DRL) Resistor ... 8B-6
Description of Section 6 ... 6-1
Determining the Type of Rear Axle Noise .. 4B-3
Differential Assembly, Front ... 4C-4
Differential Assembly, Rear ... 4B-2
Differential Carrier, Front ... 4C-17
Differential Carrier, Rear ... 4B-12

Differential Carrier Assembly, Front 4C-27
Differential Carrier Assembly, Rear 4B-25
Differential Carrier Disassembly, Front ...4C-22
Differential Carrier Disassembly, Rear 4B-20
Dimmer Switch Operation 8B-3
Disabled Vehicle Towing 0A-7
Distributor Cap and Secondary
(Spark Plug) Wire Inspection 0B-8
Distributor Disassembly,
Test and Reassembly 6D4-11
Distributor Gear Case 6A1-6
Distributor Ignition System 6D4-1
Distributor Replacement 6D4-8
Dome Lamp 8B-3,8B-13
Door, Rear 10-8-1
Door Hardware and Window, Front 10-6-3
Door Hardware Lubrication, Front 10-6-1
Door Jamb Switch 10-5-9
Door Lock, Front 10-6-7
Door Lock, Rear 10-8-4
Door Lock Link, Rear 10-8-6
Door Lock Striker, Front 10-6-6
Door Lock Striker, Rear 10-8-6
Door Stop, Rear 10-8-8
Door Support, Rear 10-8-7
Door Trim, Front 10-6-3
Draining and Refilling the
Cooling System 6B-9
Draining Fuel Tank 6C-7
Drive Axle Shaft, Left 4C-3,4C-11
Drive Axle Shaft, Right 4C-3,4C-9
Drive Axle Shaft Unit Repair 4C-19
Driveability and Emissions
Fuel Injection (TBI) 6E2-1
Driveability and Emissions
General Information 6E-1
Driveline Angles 0C-6
Driven Member 7C-3
Driving Members 7C-3
Drum 5C1-4
Drum Balance 5C1-2
Drum Brake Adjustment 5C1-7
Drum Inside Diameter Check 5C1-2
Drum Inspection 5C1-2
Drum Refinishing 5C1-8
Drum Runout Check 5C1-2
Drum Surface Finish 5C1-2
Drum Taper Check 5C1-2
Dual Pressure Switch 1B-7,1B-40
Ducts and Outlets 1A-2

E

Electrical Diagnosis 8A-CONTENTS
Electrolyte Freezing 6D1-3
Electronic Brake Control
Module (EBCM) 5E-2,5E-9
Energy Absorbers 10-4-1
Engine Assembly 6A1-53
Engine Construction 6A1-1
Engine Coolant Level (ECL), Checking 6B-4
Engine Coolant Temperature
(ECT) Sensor 6B-3
Engine Identification 0A-4
Engine Idle Speed Adjustment 0B-8
Engine Knock Diagnosis 6-5
Engine Lubrication 6A1-3
Engine Mechanical Diagnosis 6-2
Engine Mount, Left-Side 6A1-5
Engine Mount, Right-Side 6A1-4
Engine Noise Diagnosis 6-4
Engine Performance Diagnosis 6-2
Engine Service, General Description 6-2
Engine Speed Sensitive Vibrations 0C-4
Engine Tests 6-5
Engine Timing Check 0B-8

Engine Wiring 6D5-1
Evaporative Emissions (EVAP)
Canister Inspection 0B-8
Evaporator 1B-5,1B-34
Evaporator Thermistor 1B-7,1B-38
Excessive Heat 1A-7
Excessive Oil Loss 6-2
Exhaust Gas Recirculation
(EGR) System Service 0B-8
Exhaust Manifold 6A1-11
Exhaust System Component
Replacement 6F-4
Exhaust System Diagnosis 6F-2
Exhaust System Hangers 6F-1
Exhaust System Noise Diagnosis 6F-2
Expansion Valve 1B-5,1B-37
Extension Case,
2WD Manual Transmission ... 7B-23,7B-10-24
Extension Case Oil Seal,
2WD Manual Transmission 7B-21
Extension Housing 7A-29
Extension Housing Seal, 2WD 7A-29
Exterior Lighting 8B-2,8B-5

F

Fan Clutch 6B-3,6B-19
Fastener Strength Identification 0A-10
Fasteners 10-1-1,10-5-1
Faulty Indicator Lamp Operation 6D3-1
Federal Vehicle Theft Prevention
Standard 0A-2
Fender Assembly, Front 10-5-4
Filter Screen, Cleaning
Automatic Transmission 7A-19
Floor Carpet, Front 10-3-4
Floor Carpet, Rear 10-3-4
Floor Pan Insulators 10-3-2
Fluid Capacities, Approximate 0B-10
Fluid Filler Tube,
Automatic Transmission 7A-37
Fluid Leak Diagnosis,
Automatic Transmission 7A-8
Fluid Leak Repair,
Automatic Transmission 7A-8
Fluid Pressure Switch 7A-41
Flywheel 6A1-52
Flywheel Balancing 6A1-53
Flywheel Noise 6-5
Flywheel/Torque Converter Vibration
Test Procedure 7A-7
FM Radio Reception 9A-1
Folding Top 10-9-5
Folding Top Latch 10-9-12
Folding Top Maintenance 10-9-7
Folding Top Material 10-9-8
Folding Top Operation 10-9-5
Four-Wheel Drive Switch 5E-10,7D-11
Fresh/Recirc Control Lever 1A-2,1B-8
Front Alignment Angles, Measuring 3A-4
Front and Rear Axle Housing 0B-8
Front Axle Assembly 4C-2
Front Axle Housing 4C-14
Front Axle Noise, Determining
the Type of 4C-4
Front Axle Oil Change Procedure 4C-9
Front Axle Oil Level, Checking 4C-9
Front Axle Operation 4C-4
Front Axle Preliminary Checks 4C-4
Front End Panels 10-5-2
Front End Sealing 10-5-9
Front Output Shaft Oil Seal 7D-14
Front Pipe/Three Way Catalytic Converter
(TWC) Assembly 6F-5
Front Upper Panel 10-5-2

Fuel Feed and Return Pipes and Hoses 6C-4,6C-11
Fuel Filler Cap 6C-3
Fuel Filler Door 10-7-8
Fuel Filter 0B-8,6C-4,6C-6
Fuel Gage Sending Unit 6C-3,6C-10
Fuel Gage Sending Unit Diagnosis 6C-5
Fuel Pump 6C-4,6C-10
Fuel Pump Electrical Diagnosis 6C-5
Fuel System Cleaning 6C-10
Fuel System Pressure Relief 6C-6
Fuel System Pressure Test 6C-5
Fuel Tank 6C-2,6C-7
Fuel Tank, Cap and Pipes/Hoses Inspection 0B-8
Fuel Tank Filler Neck 6C-3
Fuel Tank Leak Check 6C-5
Fuel Vapor Pipe and Hoses 6C-4,6C-11
Functional Test, Heater 1A-5

G

Gages 8C-1
Gearshift Control Lever, Manual Transmission 7B-19
Gearshift Control Lever, Transfer Case ... 7D-11
Gearshift Controls 7B-10
Gearshift Lever Case, 2WD Manual Transmission 7B-10-25
Gearshift Lever Case, 4WD Manual Transmission 7B-11-24
Gearshift Lever Case Installation, 2WD ... 7B-29
Gearshift Lever Case Installation, 4WD ... 7B-36
Gearshift Lever Case Removal, 2WD 7B-26
Gearshift Lever Case Removal, 4WD 7B-33
Generator 6D3-1,6D3-3
Generator/Coolant Pump Drive Belt 6B-12
Generator Disassembly, Test and Reassembly 6D3-6
Generator Usage 6D3-12
Glove Box 8C-3
Glove Box Lock Assembly 8C-3
Glove Box Lock Striker 8C-3
Governor Assembly 7A-36
Grid Line Repair 10-2-11
Grille 10-5-3
Grille Emblem 10-5-3
Grille Nets 10-5-4
Ground Straps 6D1-12

H

Handle, Rear Door 10-8-3
Handles, Front Door 10-6-6
Handling Electrostatic Discharge (ESD) Sensitive Parts 0A-1
Hazard Lamps 8B-3
Hazard Warning Switch, Standard Column 3F1-4
Hazard Warning Switch, Tilt Column 3F2-4
Head Restraint 10-10-6
Headlamp Aiming 8B-10
Headlamp Assembly 8B-9
Headlamp Bulb Replacement 8B-10
Headlamps 8B-2
Headlining 10-9-1
Heater Case 1A-17
Heater Control Garnish 8C-3
Heater Core 1A-19
Heater Hoses 1B-41
Heater System 1A-1
Heavy Knock With Torque Applied 6-5
High or Low Heater Control Effort 1A-7
Hinges, Front Door 10-6-8

Hinges, Rear Door 10-8-7
Hood Assembly 10-5-6
Hood Bumpers 10-5-9
Hood Hinge 10-5-7
Hood Latch 10-5-7
Hood Latch Release Cable 10-5-7
Hood Prop Rod 10-5-8
Hood Rear Weatherstrip 10-5-8
Horn 8B-4,8B-15
Horn Current Adjustment 8B-16
Horn Diagnosis 8B-4
Hoses and Clamps Inspection,
Cooling System 6B-6

I

Idler Arm, Manual Steering 3B2-6
Igniter 6D4-10
Ignition Coil Replacement 6D4-9
Ignition Lock System, Standard Column . 3F1-1
Ignition Lock System, Tilt Column 3F2-1
Ignition Switch, Standard Column 3F1-4
Ignition Switch, Tilt Column 3F2-4
Ignition Switch Diagnosis 3-4
Ignition System Service Precautions 6D4-6
Ignition Timing 6D4-10
Illumination Controller 8B-3,8C-12
Included Angle 3A-2
Indicators 8C-1
Input Shaft,
2WD Manual Transmission 7B-10-8
Input Shaft,
4WD Manual Transmission 7B-11-8
Instrument Panel 8C-1,8C-4
Instrument Panel Center Trim Bezel 8C-6
Instrument Panel Cluster Assembly 8C-6
Instrument Panel Cluster
Assembly Lens 8C-6
Instrument Panel Cluster Bezel 8C-12
Instrument Panel Cluster Gages 8C-9,8C-10
Instrument Panel Cluster
(Indicator and Illumination) Lamps 8B-13
Instrument Panel Cluster Printed Circuit ... 8C-7
Instrument Panel Component Illumination
and Indicator Lamps 8B-15
Instrument Panel Handle 8C-12
Instrument Panel Outlets 1A-19
Instrument Panel Switches 8C-13
Insufficient Cooling Check 1B-11
Insufficient Heating or Defrosting 1A-7
Intake Manifold and Throttle Body
Fuel Injection (TBI) Unit 6A1-9
Interior Lighting 8B-2,8B-13
Interior Trim Panel, Rear Door 10-8-3
Interlock Cable 7A-15
Intermittent Wiper Operation 8E-1
Irregular and Premature Tire Wear 3-5
ISO Flares 5-11
Isolating Noise, Manual Transmission 7B-12

J

Jounce or Load Sensitive Vibrations 0C-4
Jump Starting in Case of Emergency
With Auxiliary (Booster) Battery 6D1-8

K

Key Identification and Usage 0A-9
Knocks at Idle Hot 6-5
Knocks Cold and Continues for Two to Three
Minutes and Increases With Torque 6-5
Knocks on Initial Start-Up but Only Lasts
a Few Seconds 6-5

L

Latch, Rear Full-Width Folding Seat ... 10-10-13
Latch Striker, Rear 50-50 Split Folding Seat ... 10-10-19
Latch Striker, Rear Full-Width Folding Seat ... 10-10-13
Lateral Runout Check ... 5B1-2
Leak Testing the Refrigeration System ... 1B-16
Left Inner Drive Axle Shaft, Bearing and Oil Seal ... 4C-11
License Plate Lamp Cover, Rear Door ... 10-8-7
License Plate Lamps ... 8B-2,8B-11
Light Knock Hot ... 6-5
Lighting Controls ... 8B-3
Lining Inspection ... 5C1-2
Linings ... 5C1-5
Lock Cylinder, Front Door ... 10-6-8
Lock Cylinder, Rear Door ... 10-8-6
Lock Cylinder Coding ... 0A-9
Lock System Diagnosis ... 3-3
Locking Hub, Automatic ... 3C-12
Locking Hub, Manual ... 3C-11
Loose Wheel Bearings ... 3-12
Low or No Oil Pressure ... 6-3
Lower Case, Countershaft and Reverse Idler Gear, 2WD Manual Transmission ... 7B-10-2
Lower Case, Countershaft and Reverse Idler Gear, 4WD Manual Transmission ... 7B-11-2
Lower Steering Column Cover Panel ... 8C-13
Lower Steering Shaft, Standard Column ... 3F1-7
Lower Steering Shaft, Tilt Column ... 3F2-7
Lubrication ... 10-1-1,10-5-1
Lubrication, Standard Column ... 3F1-1
Lubrication, Tilt Column ... 3F2-1

M

Main Bearing Clearance ... 6A1-49
Main Bearing Noise ... 6-4
Main Bearings ... 6A1-3,6A1-48
Main Bearings, Selection of ... 6A1-50
Main Shaft, 2WD Manual Transmission ... 7B-10-10
Main Shaft, 4WD Manual Transmission ... 7B-11-9
Maintenance Items ... 0B-10
Maintenance Schedule I ... 0B-1
Maintenance Schedule II ... 0B-4
Manual Selector ... 7A-12
Master Cylinder ... 5A-1,5A-4
Master Cylinder, Filling ... 5-7
Master Cylinder Bench Bleeding ... 5A-6
Master Cylinder Diagnosis ... 5A-2
Master Cylinder Fluid Reservoir ... 5A-3
Master Cylinder Fluid Reservoir, Filling ... 5A-2
Master Cylinder Unit Repair ... 5A-7
Metal Part Refinishing — Basecoat/Clearcoat ... 10-1-10
Metal Part Refinishing — Lacquer ... 10-1-9
Metric/English Conversion Table ... 0A-14
Metric Fasteners ... 0A-9
Metric Wheel Nuts and Studs ... 3E-3
Mirror, Inside Rearview ... 10-9-3
Mirrors, Front Door ... 10-6-4
Mode Control Lever ... 1A-2,1B-8
Model Identification ... 0A-4
Muffler/Tail Pipe Assembly ... 6F-5

N

Negative (-) Battery Cable ... 6D1-10
No-Load Test ... 6D2-7

Noise and Vibration Analysis, Automatic Transmission 7A-4
Noise Suppressor Condenser 6D4-7
Noise Suppressor Filter 6D4-7
Noisy Generator 6D3-3
Non-Uniform Tires, Correcting 3E-8
Normal Vehicle Use 0B-1

O

O-Rings, Replacing 1B-18
Oil Leak Diagnosis, Engine 6-2
Oil Leak Diagnosis, Manual Transmission 7B-14
Oil Leak Diagnosis, Transfer Case 7D-7
Oil Leak Repair, Manual Transmission 7B-16
Oil Level Indicator and Guide Tube 6A1-5
Oil Pan and Oil Pump Strainer, Engine 6A1-35
Oil Pressure Switch 6A1-6
Oil Pressure Test 6-7
Oil Pump 6A1-37
Oil Pump Overhaul 6A1-39
Options and Process Codes 0A-23
Out-of-Round or Tapered Drum 5C1-8
Overcharged Battery 6D3-2

P

P-Metric Tires 3E-2
Parasitic Load Test 6D1-5
Park/Neutral Position (PNP) Switch 7A-14
Park/Turn Lamp 8B-2,8B-6
Parking Brake Adjustment 5F-5
Parking Brake Cable System 5F-2
Parking Brake Cables 5F-4
Parking Brake Lever 5F-2,5F-3
Parking Brake Lever Bezel 8C-13
Parking Brake Mechanical Apply Components 5F-2
Parking Brake Switch 5F-2
Parts Cleaning, Inspection and Replacement, Automatic Transmission 7A-6
Pinion Flange Yoke Joint 4A-9
Piston Noise 6-4
Piston Pins 6A1-3,6A1-46
Piston Rings 6A1-3,6A1-40
Pistons 6A1-3,6A1-40
Pitman Arm, Manual Steering 3B2-8
Plastic Parts Identification 10-1-12
Plastic Parts Repair 10-1-20
Positive (+) Battery Cable 6D1-11
Positive Crankcase Ventilation (PCV) System Inspection 0B-8
Power Steering Pump 3B1-3,3B1-7
Power Steering Pump Diagnosis 3-3
Power Steering Pump Drive Belt Tension Adjustment 3B1-4
Power Steering Pump Unit Repair 3B1-8
Preliminary Checking Procedures, Automatic Transmission 7A-4
Preliminary Checks, Rear Axle 4B-3
Pressure Limiting Valve ... 5-2,5-12,5E-2,5E-12
Pressure Plate, Clutch Disc and Flywheel 7C-13
Prevailing Torque Fasteners 0A-13
Propeller Shaft 4A-1,4A-8
Propeller Shaft Balance Check 4A-6
Propeller Shaft Runout Check 4A-5
Propeller Shaft Vibrations 0C-6
Propeller Shafts and U-Joints 0B-8
Proportioning/Differential Valve 5-2,5-12

Q

Quarter Window, Movable 10-7-8
Quarter Window Weatherstrip, Movable 10-7-10

R

Radial Tire Lead/Pull 3-6
Radial Tire Waddle 3-6
Radiator 6B-2,6B-14
Radiator Cap 6B-2
Radiator Cap Diagnosis 6B-7
Radio 9A-6
Radio Operating Instructions 9A-2
Radio Theft Deterrent Feature 9A-5
Rear Axle Assembly 4B-2
Rear Axle Housing 4B-14
Rear Axle Oil Change Procedure 4B-7
Rear Axle Oil Level, Checking 4B-6
Rear Axle Operation 4B-3
Rear Axle Shaft and Bearing 4B-7
Rear Axle Shaft Inner Oil Seal 4B-11
Rear Case, 4WD Manual Transmission 7B-11-22
Rear Case, Rear Case Oil Seal and Rear Case Countershaft Plug, 4WD Manual 7B-30
Rear Combination Lamps 8B-2,8B-12
Rear Defogger Switch 8C-13
Rear Door Window 10-2-10
Rear Door Window Reveal Molding 10-2-3
Rear Floor Heat Duct 1A-19
Rear Main Seal 6A1-53
Rear Output Shaft Oil Seal 7D-15
Rear Quarter Interior Trim Panel 10-7-3
Rear Quarter Moldings 10-7-6
Rear Quarter Wheelhousing Interior Trim Panel 10-7-6
Rear Quarter Window Interior Trim 10-7-2
Rear Seat Belt Retractor Trim Cover, Convertible 10-7-4
Rear Seat Belt Retractor Trim Panel, Hardtop 10-7-3
Rear Suspension Upper Control Arm 3D-8
Rear Suspension Upper Control Arm Bushings 3D-10
Rear Wheel Antilock (RWAL) Brake System Diagnosis 5E3-1
Rear Wheel Speed Control 5E-5
Rear Wheel Speed Sensor 5E-2,5E-9
Rear Window, Convertible 10-9-12
Rear Window Defogger 10-2-11
Rear Wiper/Washer Switch 8C-13
Receiver/Dryer 1B-6,1B-32
Recliner Mechanism 10-10-6
Recommended Fluids and Lubricants 0B-9
Reed Tachometer 0C-1
Refrigerant Chemical Stability, Maintaining 1B-19
Refrigerant Pipes and Hoses 1B-41
Refrigerant Pipes, Hoses and Fittings, Handling 1B-19
Refrigerant-12 ..... 1B-6
Refrigerant-12, Handling 1B-19
Refrigeration Cycle 1B-10
Refrigeration System 1B-10
Refrigeration System Checks 1B-16
Refrigeration System Services 1B-18
Regulators, Front Door 10-6-10
Replacement Labels 0A-22
Replacement Lock Cylinders 0A-9
Replacement Tires 3E-1
Reserve Capacity 6D1-2
Reveal Moldings 10-2-2
Reverse Gearshift Limit Yoke 7B-10

Right Drive Axle Shaft Oil Seal 4C-14
Road Test, Front Axle 4C-4
Road Test, Propeller Shaft Diagnosis 4A-3
Road Test, Rear Axle 4B-3
Road Test, Vibrations 0C-3
Rocker Arms and Rocker Arm Shafts ... 6A1-19
Rocker Arms and Rocker Arm Shafts
Off-Vehicle Service 6A1-21
Rocker Panel Trim Covers 10-7-7
Roof Bows 10-9-12
RWAL Brake System Diagnosis 5E3-1
RWAL General Service Precautions 5E-8
RWAL Relay 5E-11
RWAL System Components 5E-2

S

Scheduled Maintenance, Explanation of 0B-4
Scrub Radius 3A-2
Seal Replacement Recommendations 3-4
Sealing Strip, Front Door Inner 10-6-3
Sealing Strip, Front Door Outer 10-6-3
Seat, Rear 50-50 Split Folding 10-10-15
Seat, Rear Full-Width Folding 10-10-9
Seat Adjuster, Front 10-10-6
Seat Belt Buckle, Front 10-11-4
Seat Belt Buckle,
Rear 50-50 Split Folding 10-11-9
Seat Belt Buckle,
Rear Full-Width Folding 10-11-7
Seat Belt Operational
and Functional Checks 10-11-2
Seat Belt Retractor Mechanism,
Front 10-11-4
Seat Belt Retractor Mechanism,
Rear Convertible 10-11-6
Seat Belt Retractor Mechanism,
Rear Hardtop 10-11-5
Seat Cushion, Front 10-10-5
Seat Cushion,
Rear 50-50 Split Folding 10-10-18
Seat Cushion,
Rear Full-Width Folding 10-10-11
Seat Cushion Cover, Front 10-10-6
Seat Cushion Cover,
Rear 50-50 Split Folding 10-10-18
Seat Cushion Cover,
Rear Full-Width Folding 10-10-12
Seat Cushion Trim Cover,
Rear 50-50 Split Folding 10-10-19
Seat Cushion Trim Cover,
Rear Full-Width Folding 10-10-12
Seat Rails,
Rear 50-50 Split Folding 10-10-15
Seatback, Front 10-10-4
Seatback, Rear 50-50 Split Folding 10-10-16
Seatback, Rear Full-Width Folding 10-10-10
Seatback Cover, Front 10-10-5
Seatback Cover,
Rear 50-50 Split Folding 10-10-17
Seatback Cover,
Rear Full-Width Folding 10-10-11
Seats, Front 10-10-1
Seats, Rear 10-10-1
Secondary Wiring 6D4-2
Secondary Wiring Replacement 6D4-6
Service Parts Identification Label 0A-22
Services to Be Performed
at Least Once a Year 0B-5
Services to Be Performed
at Least Twice a Year 0B-5
Set Back 3A-2
Shift Lock Solenoid 7A-16
Shift Select Cable 7A-13
Shock Absorber 3D-3

Side Marker Lamps 8B-2,8B-12
Sill Plate, Rear 10-3-5
Sliding Yoke Joint 4A-13
Solenoid Replacement 6D2-6
Spare Tire 3E-6
Spare Tire Carrier 10-8-8
Spark Plug Diagnosis 6D4-4
Spark Plug Replacement 0B-8,6D4-6
Spark Plugs 6D4-2
Speakers, Front 9A-7
Speakers, Rear 9A-8
Special Tool Ordering Information 0A-2
Speedometer 8C-1
Speedometer Cable 8C-13
Speedometer Drive Gear,
2WD Automatic Transmission 7A-35
Speedometer Drive Gear,
2WD Manual Transmission 7B-26
Speedometer Driven Gear,
2WD Automatic Transmission 7A-28
Speedometer Driven Gear,
2WD Manual Transmission 7B-22
Speedometer Driven Gear, 4WD 7D-12
Squeak and Rattle Diagnosis
and Repair 10-1-8
Stabilizer Bar and Bushing 3C-3
Standard Nomenclature for Certain
Electronic Components and Systems .. 0A-16
Starter Assembly 6D2-14
Starter Assembly Performance
Testing 6D2-4
Starter Cleaning, Inspection
and Testing 6D2-10
Starter Disassembly 6D2-8
Starter Motor 6D2-2
Starter Motor Usage 6D2-15
Starter Replacement 6D2-5
Stationary Windows 10-2-1,10-2-4
Steering Angle 3A-2
Steering Angle, Adjusting 3B2-10
Steering Axis Inclination 3A-2
Steering Column, Standard 3F1-5
Steering Column, Tilt 3F2-1,3F2-5
Steering Column Diagnosis 3-3
Steering Column for Accident Damage,
Checking Standard 3F1-8
Steering Column for Accident Damage,
Checking Tilt 3F2-8
Steering Fluid, Checking
and Adding Power 3B1-4
Steering Gear, Manual 3B2-1,3B2-3
Steering Gear, Power 3B1-2,3B1-5
Steering Gear and Pump Leaks 3-4
Steering Gear Inspection, Manual 3B2-8
Steering Gear Oil Level, Manual 3B2-8
Steering Knuckle and Spindle 3C-6
Steering Linkage Skid Plate 10-5-4
Steering Wheel, Standard Column 3F1-1
Steering Wheel, Tilt Column 3F2-2
Steering Wheel Inspection 3B2-8
Stoplamp Switch 5-8
Stoplamp Switch,
Automatic Transmission 7A-17
Stoplamp Switch Adjustment 5-8
Stripes and Decals 10-1-2
Strut Dampener 3C-3
Strut Dampener
and Shock Absorber Diagnosis 3-5
Sunshades 10-9-3
Suspension Inspection, Front 3C-1
Suspension Inspection, Rear 3C-3
Synchronizers 7B-5

T

Tape Player and Cassette Care 9A-1
Temperature Control Lever 1A-1,1B-9
Testing Grid Lines 10-2-11
Theft Deterrent Labeling 10-1-2
Theft Deterrent Labels 10-4-1,10-6-1
Thermostat 6B-3,6B-11
Thermostat Test 6B-6
Thickness Variation Check 5B1-2
Thread Repair 6A1-63
Three Way Catalytic Converter (TWC) 6F-1
Three Way Catalytic Converter (TWC)
Support Bracket 6F-6
Throttle Body Fuel Injection (TBI)
Unit Mounting Torque 0B-6
Thrust Angle 3A-3
Tie Rod, Manual Steering 3B2-4
Tie Rod End, Manual Steering 3B2-5
Timing Belt and Sprocket Noise 6-4
Timing Belt and Tensioner 6A1-16
Timing Belt Replacement 0B-5
Tire and Wheel Inspection and Rotation ... 0B-6
Tire Diagnosis 3-5
Tire Inflation 3E-3
Tire Mounting and Dismounting 3E-6
Tire Placard 3E-3
Tire Pressure Specifications 0B-10
Tire Repair 3E-6
Tire Rotation 3E-5
Toe 3A-2,3A-4
Torque and Engine Speed Sensitive
Vibrations 0C-5
Torque and Vehicle Speed Sensitive
Vibrations 0C-5
Torque Converter Clutch (TCC)
Diagnosis 7A-10
Torque Converter Clutch (TCC)
Electrical Controls 7A-10
Torque Converter Clutch (TCC)
Solenoid 7A-41
Torque Sensitive Vibrations 0C-4
Torque Stopper Bushing 7D-16
Trailer Hitch Draw Bar 10-8-8
Trailing Rod 3D-5
Trailing Rod Bushings 3D-6
Transfer Adapter Case, 4WD 7A-33
Transfer Adapter Case Seal, 4WD 7A-32
Transfer Case 7D-19
Transfer Case Assembly 7D-32
Transfer Case Disassembly 7D-21
Transfer Case Oil, Changing 7D-10
Transfer Case Oil Leak Repair 7D-9
Transfer Case Oil Level, Checking 7D-9
Transfer Case Operation 7D-2
Transfer Case Rear Mount 7D-18
Transfer Case Skid Plate 7D-10
Transmission, Automatic 7A-43
Transmission, Manual 7B-37
Transmission Assembly,
2WD Manual 7B-10-27
Transmission Assembly,
4WD Manual 7B-11-27
Transmission Cooler Flushing 7A-21
Transmission Cooler Pipes and Hoses 7A-42
Transmission Definitions, Automatic 7A-2
Transmission Diagnosis,
Automatic 7A-11A-1
Transmission Disassembly,
2WD Manual 7B-10-1
Transmission Disassembly,
4WD Manual 7B-11-1
Transmission Fluid,
Changing Automatic 7A-19

Transmission Fluid Information, Automatic 7A-4
Transmission Fluid Level Checking Procedures, Automatic 7A-6
Transmission Identification Information, Automatic 7A-1
Transmission Identification Information, Manual 7B-1
Transmission Model Identification 0A-5
Transmission Mount, Rear 2WD Manual 7B-17
Transmission Oil Change Procedure, Manual 7B-17
Transmission Oil Level, Checking Manual 7B-16
Transmission/Transfer Case Service 0B-7
Transmission Unit Repair, Automatic 7A-11B-1
Transmission Usage 0A-5
Tread Wear Indicators 3-6
Trim Height 3-12
Turn/Hazard Relay 8C-14
Turn Signal Operation 8B-4
Turning Angle 3A-2
TV Cable 7A-17

U

Underbody Dimensions 10-3-5
Undercharged Battery 6D3-1
Universal Joint 4A-3,4A-9
Universal Joint Noises 4A-4
Universal Joints Vibrations 0C-6
Upper Case, Gearshift Shafts and Gearshift Forks, 2WD Manual Transmission 7B-10-19
Upper Case, Gearshift Shafts and Gearshift Forks, 4WD Manual Transmission 7B-11-18

V

Vacuum Modulator 7A-22
Vacuum Test 6-7
Valve Body Installation 7A-40
Valve Body Removal 7A-37
Valve Lash 6A1-13
Valve Mechanism or Valve Train Noise 6-4
Valve Train 6A1-2
Valves 6A1-23
Vehicle Identification Number (VIN) 0A-2
Vehicle Speed Sensitive Vibrations 0C-3,0C-4
Ventilation 1A-5
Vibration 0C-1
Vibration Complaint, Classifying a 0C-2
Vibrations, Suspension 3-9
Voltage Regulator Test 6D3-2

W

Washer Fluid Reservoir 8E-6
Washer Nozzle, Front 8E-6
Washer Nozzle, Rear 8E-10
Washer Pump, Front 8E-6
Washer Pump, Rear 8E-10
Washer System 8E-1
Water Deflector, Front Door 10-6-4
Water Deflector, Rear Door 10-8-3
Waterleak Diagnosis and Repair 10-1-4
Watertest and Waterleak Procedures, Folding Top 10-9-7

Weatherstrips, Front Door 10-6-3
Wheel Alignment Preliminary
Inspections 3A-3
Wheel Bearing Diagnosis 3-12
Wheel Bearing Noise 3-12
Wheel Bearings 0B-8
Wheel Cylinder 5C1-6
Wheel Cylinder Unit Repair 5C1-8
Wheel Hub and Bearing 3C-13
Wheel Installation 3E-4
Wheel Nut Torque 3E-8
Wheel Removal 3E-4
Wheel Repair 3E-3
Wheel Runout, Measuring 3E-6
Wheelhousing, Front 10-5-6
Wheels 3E-3
When to Disconnect the Negative (-)
Battery Cable 0A-1
Windnoise Diagnosis and Repair 10-1-7
Window, Rear Door 10-8-7
Windows, Front Door 10-6-9
Windshield 10-2-4
Windshield Reveal Molding 10-2-2
Wiper Arm, Front 8E-2
Wiper Arm, Rear 8E-6
Wiper Blade Assembly, Front 8E-2
Wiper Blade Assembly, Rear 8E-8
Wiper Blade Rubber, Front 8E-3
Wiper Blade Rubber, Rear 8E-8
Wiper Linkage, Front 8E-3
Wiper Linkage, Rear 8E-8
Wiper Motor, Front 8E-5
Wiper Motor, Rear 8E-9
Wiper/Washer System, Front 8E-1,8E-2
Wiper/Washer System, Rear 8E-1,8E-8
Wiring Harness and Connectors 0B-8
Worm Shaft Preload Torque,
Adjusting 3B2-9

1993 SERVICE MANUAL COMMENT FORM *

Use this form to advise us of any errors you might find in this manual. We also welcome suggestions for improving the Service Manuals.

Service Manual(s) that have the error _____

Page number(s) that have the error _____

Figure number(s) that have the error _____

VIN (if available) or model and applicable options _____

Describe in detail, the error found or the suggestion(s). Attach additional pages if necessary.

_____

_____

_____

_____

_____

_____

_____

_____

_____

_____

_____

_____

_____

_____

_____

_____

From: Dealer Firm Name _____ Dealer Code _____ – _____

City/Town _____ State _____ Zip Code _____

Name of Person Submitting This Comment Form _____

Signature _____ Date _____ Phone ( ) _____ – _____

Mail To: Service Technology Group
Service Information Production
(G30–5)
C.C.O. Building
30007 Van Dyke Ave.
Warren, Mi. 48090

STG

GM Service Technology Group

* Additional comment forms at back of manual.

1993 SERVICE MANUAL COMMENT FORM *

Use this form to advise us of any errors you might find in this manual. We also welcome suggestions for improving the Service Manuals.

Service Manual(s) that have the error _____

Page number(s) that have the error _____

Figure number(s) that have the error _____

VIN (if available) or model and applicable options _____

Describe in detail, the error found or the suggestion(s). Attach additional pages if necessary.

_____

_____

_____

_____

_____

_____

_____

_____

_____

_____

_____

_____

_____

_____

_____

_____

From: Dealer Firm Name _____ Dealer Code _____ – _____

City/Town _____ State _____ Zip Code _____

Name of Person Submitting This Comment Form _____

Signature _____ Date _____ Phone ( ) – _____

Mail To: Service Technology Group
Service Information Production
(G30 – 5)
C.C.O. Building
30007 Van Dyke Ave.
Warren, Mi. 48090

STG

GM Service Technology Group

* Additional comment forms at back of manual.

STG

GM Service Technology Group