WIPER/WASHER: PULSE

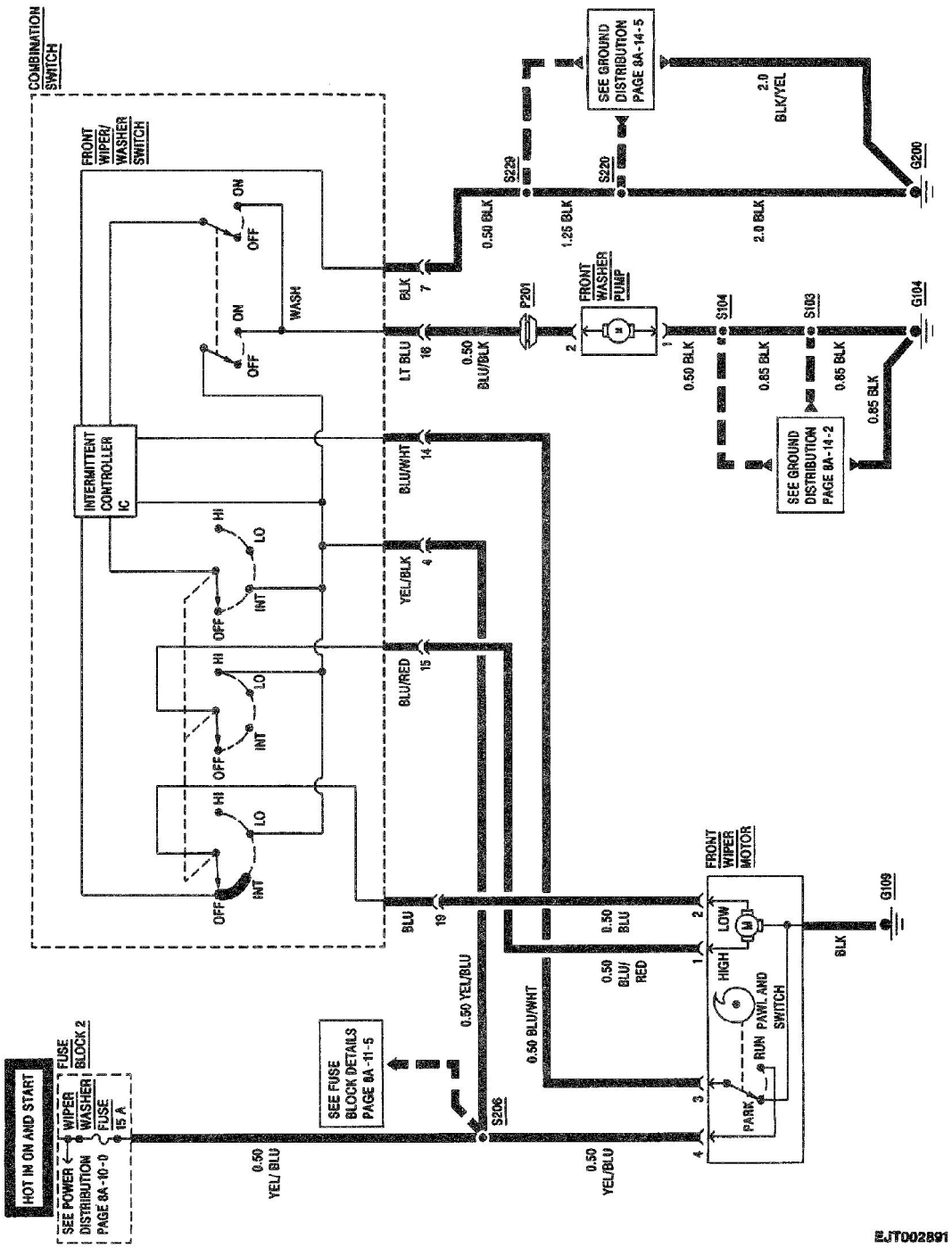

COMPONENT	LOCATION	201-PG	FIG.	CONN
Combination Switch	On Steering Column	06	A	202-00A1
Front Washer Pump	RH Front Engine Compartment, on Washer Fluid Reservoir	02	A	
Front Wiper Motor	LH Rear Engine Compartment, on Bulkhead	04	A	
Front Wiper/Washer Switch	RH Steering Column, in Combination Switch			
Fuse Block 2	Under LH I/P	06	A	
G104	RH Front Inner Fender near Washer Fluid Reservoir	02	A	
G109	LH Bulkhead near Front Wiper Motor			
G200	Behind LH I/P, above Fuse Block 2	06	A	
P201	RH Rear Engine Compartment on Bulkhead, near Battery	01	A	
S220	Main Harness, near I/P left of Steering Column			
S229	Main Harness, near I/P left of Steering Column			
S103	Main Harness, behind RH Headlamps			
S104	Main Harness, behind RH Headlamps			
S206	Main Harness, behind LH I/P near Fuse Block 2			

TROUBLESHOOTING HINTS

1. Check the WIPER WASHER Fuse with a fuse tester.
2. Check that G104, G109 and G200 are clean and tight.
3. If the WASHER does not operate, check that:
   - Washer reservoir is adequately filled.
   - Hoses are not pinched or kinked.
   - Hoses are properly routed.
   - Front washer nozzles are not clogged.

SYSTEM DIAGNOSIS

TEST	RESULT	ACTION
1. Turn Ignition Switch to "ON." Pull Front Wiper/Washer Switch toward driver's seat.	FRONT WASHER PUMP operates, and wipers complete at least one full sweep.	GO to step 2.
	FRONT WASHER PUMP does not operate.	GO to step 5.
	FRONT WASHER PUMP operates but wipers do not complete at least one sweep.	GO to step 16.
	FRONT WASHER PUMP continues to operate after Front Wiper/Washer Switch has been released.	GO to step 20.
	Wipers continue to operate after Front Wiper/Washer Switch has been released.	GO to step 21.
2. Turn Front Wiper/Washer Switch to "INT" position.	Wipers sweep once every 6 seconds.	GO to step 3.
	Wipers do no operate in intermittent mode.	Replace COMBINATION SWITCH.
3. Turn Front Wiper/Washer Switch to "LO" position.	Wipers operate at low speed.	GO to step 4.
	Wipers do not operate.	Replace COMBINATION SWITCH.
	Wipers operate at high speed.	GO to step 9.

WIPER/WASHER: PULSE

SYSTEM DIAGNOSIS

TEST	RESULT	ACTION
4. Turn Front Wiper/Washer Switch to "HI" position.	Wipers operate at high speed.	All systems diagnosed in this Section are functioning normally.
	Wipers do not operate.	GO to step 11.
	Wipers operate at low speed.	GO to step 13.
5. Backprobe COMBINATION SWITCH connector with a test lamp from cavity 4 to chassis ground.	Test lamp does not light.	Repair open in YEL/BLU wire between FUSE BLOCK and COMBINATION SWITCH.
	Test lamp lights.	GO to step 6.
6. Backprobe COMBINATION SWITCH connector with a test lamp from cavity 16 to chassis ground. Hold Washer Switch in the "ON" position.	Test lamp does not light.	Check for an open in BLK wire between COMBINATION SWITCH and G200. If OK, replace COMBINATION SWITCH.
	Test lamp lights.	GO to step 7.
7. Turn Ignition Switch to "LOCK." Disconnect FRONT WASHER PUMP and COMBINATION SWITCH connectors. Connect a digital multimeter from cavity 16 of the COMBINATION SWITCH to cavity 2 of the FRONT WASHER PUMP connector. Measure resistance.	More than 1.0 ohm.	Repair open in BLU/BLK wire between COMBINATION SWITCH and FRONT WASHER PUMP.
	Less than 1.0 ohm.	GO to step 8.
8. Connect a digital multimeter from FRONT WASHER PUMP connector cavity 1 to chassis ground. Measure resistance.	More than 1.0 ohm.	Repair open in BLK ground wire between FRONT WASHER PUMP and G104.
	Less than 1.0 ohm.	Replace FRONT WASHER PUMP.
9. Backprobe FRONT WIPER MOTOR connector with a test lamp from cavity 1 to chassis ground. Leave Front Wiper/Washer Switch in "LO."	Test lamp does not light.	Replace FRONT WIPER MOTOR.
	Test lamp lights.	GO to step 10.
10. Disconnect COMBINATION SWITCH connector. Connect a test lamp from connector cavity 16 to chassis ground.	Test lamp lights.	Repair short to voltage in BLU/RED wire between COMBINATION SWITCH and FRONT WIPER MOTOR.
	Test lamp does not light.	Replace COMBINATION SWITCH.
11. Backprobe FRONT WIPER MOTOR connector with a test lamp from cavity 1 to chassis ground. Leave Front Wiper/Washer Switch in "HI."	Test lamp lights.	Replace FRONT WIPER MOTOR.
	Test lamp does not light.	GO to step 12.
12. Backprobe COMBINATION SWITCH with a test lamp from cavity 16 to chassis ground.	Test lamp lights.	Repair open in BLU/RED wire between COMBINATION SWITCH and FRONT WIPER MOTOR.
	Test lamp does not light.	Replace COMBINATION SWITCH.
13. Backprobe FRONT WIPER MOTOR connector with a test lamp from cavity 2 to chassis ground. Leave Front Wiper/Washer Switch in "HI."	Test lamp lights.	Replace COMBINATION SWITCH.
	Test lamp does not light.	GO to step 14.

LOW OPERATION

With the Front Wiper/Washer Switch in the "LO" position, Battery voltage is applied through the WIPER WASHER Fuse, and the "LO" contacts of the Front Wiper/Washer Switch to the LOW side of the FRONT WIPER MOTOR. Since the FRONT WIPER MOTOR is permanently grounded at G109, the motor operates at low speed as long as the switch remains in this position. When the switch is placed in the "OFF" position, the Pawl and Switch assembly provides voltage to the motor until the wipers are in the PARK position.

HIGH OPERATION

With the Front Wiper/Washer Switch in the "HI" position, Battery voltage is applied through the WIPER WASHER Fuse, and the "HI" contacts of the Front Wiper Washer Switch to the HIGH side of the FRONT WIPER MOTOR. Since the FRONT WIPER MOTOR is permanently grounded at G109, the motor operates at high speed as long as the switch remains in this position. When the switch is moved to the "OFF" position, the Pawl and Switch assembly provides voltage to the motor until the wipers are in the PARK position.

WIPER/WASHER: PULSE

COMPONENT REPLACEMENT INFORMATION

For component replacement procedures, refer to the section listed below.

CIRCUIT OPERATION

Whenever the Ignition Switch is in the "ON" or "START" position, battery voltage is applied through the WIPER WASHER Fuse to the Front Wiper/Washer Switch (in the COMBINATION SWITCH) and the FRONT WIPER MOTOR Pawl and Switch contacts.

WASHER OPERATION

When the Front Wiper/Washer Switch is pulled toward the driver, battery voltage is applied through the Wash Switch contacts to the FRONT WASHER PUMP. The FRONT WASHER PUMP is permanently grounded at G104 and will operate as long as the Wash Switch is held. To initiate wiper operation, battery voltage is applied through the Wash Switch contacts and the Intermittent Controller to the OFF contacts of the Front Wiper/Washer Switch. This action applies battery voltage to the LOW side of the FRONT WIPER MOTOR. The FRONT WIPER MOTOR is permanently grounded at G109 and will continue to operate in LOW as long as the Wash Switch is held in the ON position.

The FRONT WIPER MOTOR Pawl and Switch will engage as the Motor turns, and its contacts will remain closed until the wipers are in the Park position. While the Pawl and Switch contacts are closed, voltage is applied through the WIPER WASHER Fuse, the FRONT WIPER MOTOR Pawl and Switch contacts and the OFF contacts of the Front Wiper/Washer Switch to the LOW side of the FRONT WIPER MOTOR. In this manner, the wipers will complete at least one sweep after the Wash Switch has been released.

INTERMITTENT OPERATION

With the Front Wiper/Washer Switch in the "INT" position, battery voltage is applied through the WIPER WASHER Fuse to the coil of an electronic relay in the Intermittent Controller and to a condenser also in the Intermittent Controller. The condenser charges to voltage and the relay is energized as soon as power is applied. When the switch in the energized relay closes, current flows through the YEL/BLU wire, YEL/BLK wire, Front Wiper/Washer Switch and Intermittent Controller, and the BLU wire to the FRONT WIPER MOTOR LOW side. The wipers begin to operate at low speed.

By the time the FRONT WIPER MOTOR makes one complete sweep and the FRONT WIPER MOTOR Pawl and Switch has engaged, the condenser in the Intermittent Controller has discharged. This discharge in the condenser causes the Intermittent Controller Relay coil to de-energize, and the switch in the relay to open. Current flow to the wipers is then cut off until the condenser is recharged. In this manner, intermittent wiper operation is achieved through the charging and discharging of the Intermittent Controller condenser.

LOW OPERATION

With the Front Wiper/Washer Switch in the "LO" position, battery voltage is applied through the WIPER WASHER Fuse, and the "LO" contacts of the Front Wiper/Washer Switch to the LOW side of the FRONT WIPER MOTOR. Since the FRONT WIPER MOTOR is permanently grounded at G109, the motor operates at low speed as long as the switch remains in this position. When the switch is placed in the "OFF" position, the Pawl and Switch assembly provides voltage to the motor until the wipers are in the Park position.

HIGH OPERATION

With the Front Wiper/Washer Switch in the "HI" position, battery voltage is applied through the WIPER WASHER Fuse, and the HIGH contacts of the Front Wiper/Washer Switch to the HIGH side of the FRONT WIPER MOTOR. Since the FRONT WIPER MOTOR is permanently grounded at G109, the motor operates at high speed as long as the switch remains in this position. When the switch is placed in the "OFF" position, the Pawl and Switch assembly provides voltage to the motor until the wipers are in the Park position.

BLANK