Section C3-A

Evaporative Emission (EVAP) Control System

Contents

General Description

Purpose

The basic Evaporative Emission (EVAP) control system used on all vehicles is the EVAP canister storage method. This method transfers fuel vapor from the fuel tank to an activated carbon (charcoal) storage device (EVAP canister) to hold the vapors when the vehicle is not operating. When the engine is running the fuel vapor is purged from the carbon element by intake air flow and consumed in the normal combustion process.

Evaporative Emission (EVAP) Control System

Figure C3-1

An Evaporative Emission (EVAP) control system is used to prevent emission of fuel vapor.

The vapor generated in the fuel tank while driving, or with the engine at a stop, passes through a Tank Pressure Control valve and enters the EVAP canister where charcoal absorbs and stores the fuel vapor.

Only when the following conditions are satisfied, the Engine Control Module (ECM) will energize the EVAP canister purge valve, allowing ported vacuum to be applied through the EVAP canister purge valve to the EVAP canister, thus purging the EVAP canister.

- Engine running.
- Engine Coolant Temperature (ECT) sensor is high (engine at operating temperature).
- Throttle valve opening not in the idle position.

As a result, fuel vapor in the EVAP canister is sucked into the intake manifold through the EVAP canister purge valve and purge hose. In this state, the EVAP canister is purged or cleaned by air drawn through the filter at the bottom of the EVAP canister.

Ported vacuum is applied to the EVAP canister through the EVAP canister purge valve when the ECM commands the EVAP canister purge valve "ON." When the ECT sensor is low, the ECM interrupts the ground path to the EVAP canister purge valve. Therefore, ported vacuum is not applied to the EVAP canister. In this state, the EVAP canister is not purged.

The Tank Pressure Control valve is provided to keep pressure in the fuel tank constant. When the pressure in the fuel tank becomes positive and reaches its specified value, it opens the valve to let the vapor flow into the EVAP canister. When the pressure in the fuel tank becomes negative and reaches its specified value, it opens the valve to let the air flow into the fuel tank.

The ECM can also check if the EVAP canister purge flow occurs when the EVAP purge duty (purge volume) is changed while the engine is running at idle speed by checking the amount of variation in the idle air control duty and the fuel injection time.

Results Of Incorrect Operation

Poor idle, stalling and poor driveability can be caused by:

- Damaged Evaporative Emission (EVAP) canister.
- Hoses split, cracked and/or not connected to the proper tubes.

Evidence of fuel loss or fuel vapor odor can be caused by:

- Liquid fuel leaking from fuel pipes.
- Cracked or damaged EVAP canister.
- Disconnected, misrouted, kinked, deteriorated or damaged vapor hoses.

If the EVAP canister purge valve is always energized (open), the EVAP canister can purge to the intake manifold at all times. This can allow extra fuel at idle or during warm-up, which can cause rough or unstable idle, or too rich operation.

If the EVAP canister purge valve is never energized (closed), the EVAP canister can become overloaded resulting in odor.

Figure C3-1 - Evaporative Emission (EVAP) Control System (Typical)

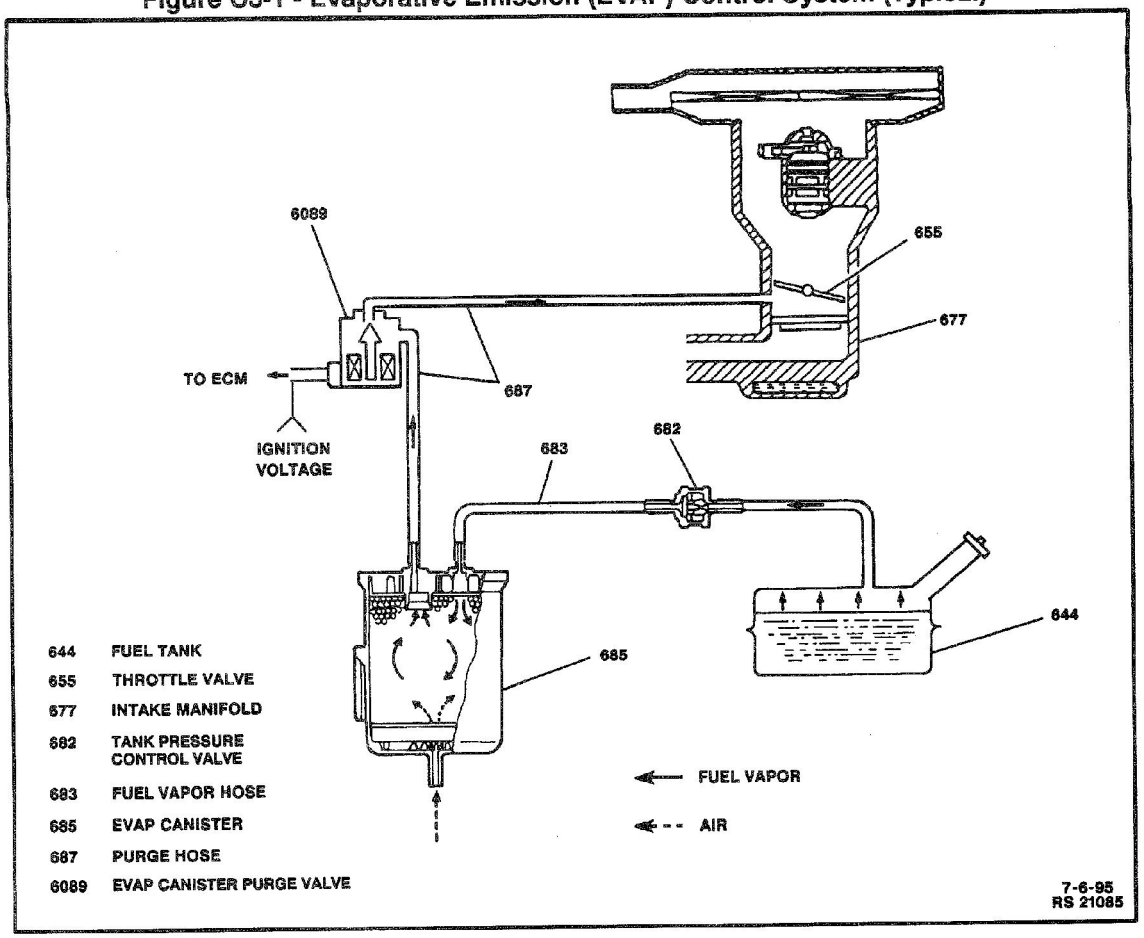

On-Vehicle Service

Important: A careful visual check of the Evaporative Emission (EVAP) canister, the connecting vacuum hose and the EVAP canister purge valve, should be made before diagnosis of the EVAP canister malfunction.

Evaporative Emission (EVAP) Canister Hoses

Refer to *"Vehicle Emissions Control Information Label"* for proper routing of Evaporative Emission (EVAP) hoses.

Evaporative Emission (EVAP) Canister Replacement

Figure C3-2

Remove or Disconnect

1. Negative (-) battery cable.
2. One clamp and two vacuum hoses from Evaporative Emission (EVAP) canister (*Figure C3-2*).
3. Two bolts, EVAP canister and mounting bracket from engine compartment (*Figure C3-2*).
4. One screw and EVAP canister from mounting bracket.

Install or Connect

1. EVAP canister to mounting bracket; secure with one screw.
2. EVAP canister to mounting bracket to engine compartment; secure with two bolts.

Tighten

- EVAP canister bolts to 15 N•m (11 lb. ft.).

3. Two vacuum hoses to EVAP canister, secure with one clamp.
4. Negative (-) battery cable.

Tighten

- Negative (-) battery cable-to-negative (-) battery terminal retainer to 15 N•m (11 lb. ft.).

Figure C3-2 Removing EVAP Canister

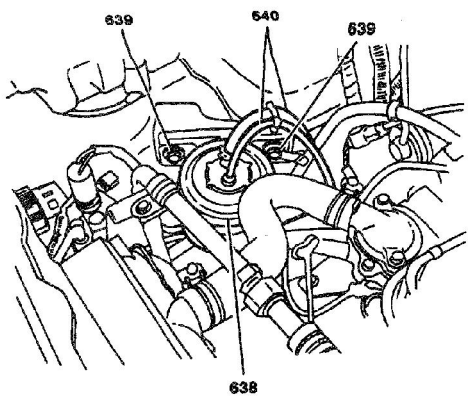

638 EVAP CANISTER
639 EVAP CANISTER MOUNTING BOLTS
640 EVAP CANISTER HOSES

3-16-94
RS 20916

Evaporative Emission (EVAP) Canister Inspection

Caution: Do not suck air through the Evaporative Emission (EVAP) canister purge valve tubes/hoses. Fuel vapor inside the EVAP canister purge valve is harmful.

1. Disconnect vacuum hoses from EVAP canister.
2. Blow air into the tank pipe of the EVAP canister, there should be no restriction of flow through the purge pipe and air pipe.
3. Blow air into purge pipe of the EVAP canister, air should NOT pass through either the tank pipe or the air pipe.
   - If the EVAP canister should fail either check, the EVAP canister must be replaced.
4. Connect hoses to EVAP canister.

Evaporative Emission (EVAP) Canister Purge Valve Replacement

Figure C3-3

Remove or Disconnect

1. Negative (-) battery cable.
2. Evaporative Emission (EVAP) canister purge valve electrical connector (*Figure C3-3*).
3. Two vacuum hoses from EVAP canister purge valve (*Figure C3-3*).
4. Two screws and EVAP canister purge valve from intake manifold (*Figure C3-3*).

Install or Connect

1. EVAP canister purge valve to intake manifold; secure with two screws.
2. Two vacuum hoses to EVAP canister purge valve.
3. EVAP canister purge valve electrical connector.
4. Negative (-) battery cable.

Tighten

- Negative (-) battery cable-to-negative (-) battery terminal retainer to 15 N•m (11 lb. ft.).

Figure C3-3 - Removing EVAP Canister Purge Valve

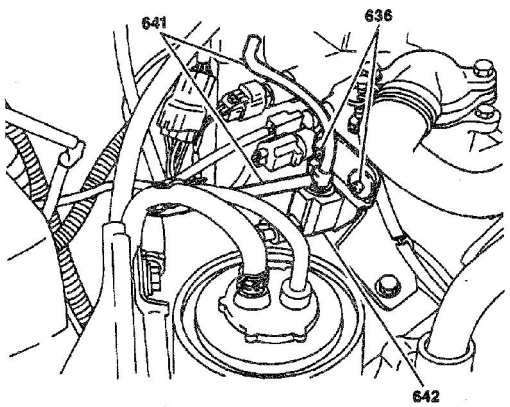

636 SCREWS
641 EVAP CANISTER PURGE VALVE HOSES
642 EVAP CANISTER PURGE VALVE

6-9-94
RS 20917

Evaporative Emission (EVAP) Canister Purge Valve Inspection

Figures C3-4 and C3-5

Caution: Do not suck air through the Evaporative Emission (EVAP) canister purge valve tubes/hoses. Fuel vapor inside the EVAP canister purge valve is harmful.

Tool Required

J 39200 Digital Multimeter

1. Disconnect the EVAP canister purge valve electrical connector.
2. Using J 39200, measure resistance of the EVAP canister purge valve between both terminals (*Figure C3-4*). If resistance is not 33 to 39 ohms at 20°C (68°F), replace the EVAP canister purge valve.

Refer to *"Evaporative Emission (EVAP) Canister Purge Valve Replacement"* earlier in this section. If the resistance is within specification, proceed with Step 3.

Figure C3-4 - Measuring Evaporative Emission (EVAP) Canister Purge Valve Resistance (Typical)

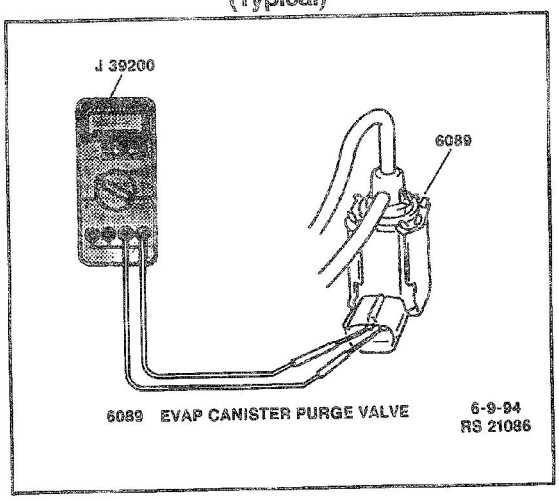

3. Disconnect the EVAP canister purge valve vacuum hoses from the intake manifold and from the EVAP canister.
4. Blow air into the EVAP canister purge valve vacuum hose that was disconnected from the EVAP canister. Air should not pass through the EVAP canister purge valve and exit from the intake manifold hose (*Figure C3-5*).
5. Connect 12 volts DC to the EVAP canister purge valve terminals.
6. Blow air into the EVAP canister purge valve vacuum hose that was disconnected from the EVAP canister. Air should pass through the EVAP canister purge valve and exit from the intake manifold hose (*Figure C3-5*).
7. If the EVAP canister purge valve failed this inspection, replace it. Refer *to "Evaporative Emission (EVAP) Canister Purge Valve Replacement"* earlier in this section. If the EVAP canister purge valve passed this inspection, reconnect the vacuum hoses and electrical connector.

Figure C3-5 - Inspecting Evaporative Emission (EVAP) Canister Purge Valve (Typical)

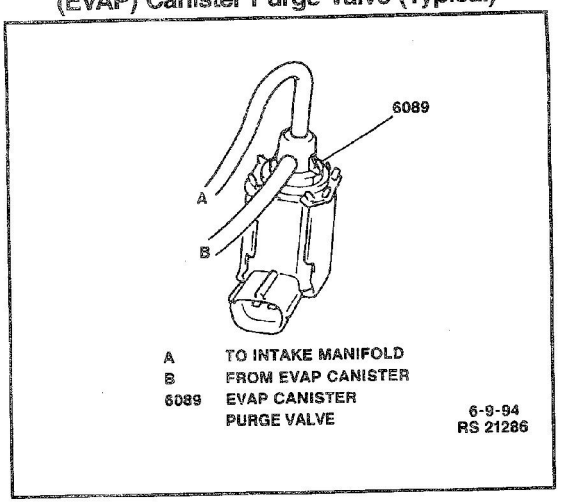

Tank Pressure Control Valve

Remove or Disconnect

1. Fuel tank from vehicle. Refer to *Section 6C.*
2. Two clamps and fuel vapor hoses from Tank Pressure Control valve.
3. Two screw and Tank Pressure Control valve from fuel tank.

Inspect

1. Connect a length of hose to black side of Tank Pressure Control valve.
2. Blow into hose; air should pass through the Tank Pressure Control valve.
3. Remove hose from black side and connect it to the orange side of the Tank Pressure Control valve.
4. Blow into hose; air should not pass through the Tank Pressure Control valve.

- If the Tank Pressure Control valve does not pass the above tests, replace the Tank Pressure Control valve.

Install or Connect

1. Tank Pressure Control valve to fuel tank; secure with two screws.
2. Fuel vapor hoses to Tank Pressure Control valve; secure with two clamps.
3. Fuel tank to vehicle. Refer to *Section 6C.*

Specifications

Engine Fastener Tightening Specifications

Application	N•m	Lb Ft	Lb In
EVAP Canister Bolts	15	11	—
Negative (-) Battery Cable-to-Negative (-) Battery Terminal Retainer	15	11	—

BLANK