Section C2

Fuel Metering System

Contents

General Description

The basic function of the fuel metering system is to control fuel delivery to the engine. Fuel is delivered to the engine by individual fuel injectors mounted in the intake manifold near each cylinder.

The main control sensor is the Heated Oxygen Sensor 1 (HO2S 1), which is located in the exhaust manifold. The HO2S 1 provides the Engine Control Module (ECM) with exhaust stream oxygen content information. The ECM modifies the air/fuel mixture by changing the injector pulse width signal sent to the injectors. By constantly measuring the exhaust oxygen content and adjusting the injector pulse width, the air fuel ratio is kept very close to the optimal 14.7:1. This is the range at which the three-way catalytic converter operates most effectively and at which the vehicle's emissions are kept to a minimum. The constant tailoring of the air/fuel ratio based upon the HO2S 1 feedback is referred to as "Closed Loop" operation.

Air Intake System

Figure C2-1

The main components of the air intake system are the Air Cleaner (ACL), Mass Air Flow (MAF) sensor, air intake pipe, throttle body, fast idle air valve, Idle Air Control (IAC) valve and intake manifold.

The air (by the amount corresponding to the throttle valve opening and engine speed) is filtered by the ACL, passes through the throttle body, is distributed by the intake manifold and finally drawn into each combustion chamber.

When the engine is idling or cold and the Idle Air Control (IAC) valve is opened according to the signal from the Engine Control Module (ECM), the air bypasses the throttle valve through the bypass passage and is finally drawn into the intake manifold.

Figure C2-1 - Air Intake System

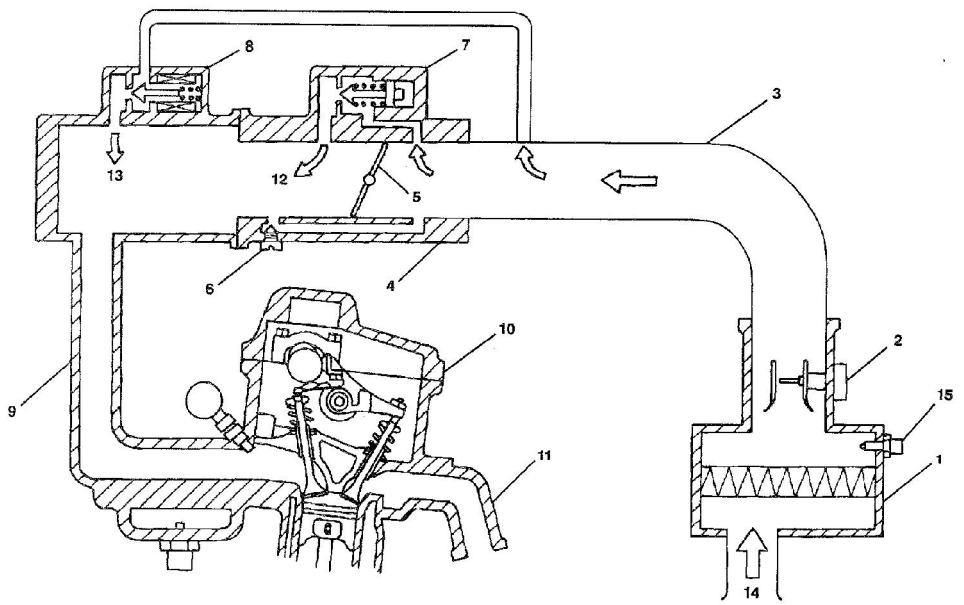

1 AIR CLEANER (ACL)
2 MASS AIR FLOW (MAF) SENSOR
3 AIR INTAKE PIPE
4 THROTTLE BODY
5 THROTTLE VALVE
6 IDLE SPEED ADJUSTING SCREW
7 FAST IDLE AIR VALVE
8 IDLE AIR CONTROL (IAC) VALVE
9 INTAKE MANIFOLD
10 CYLINDER HEAD
11 EXHAUST MANIFOLD
12 AIR FLOW WHEN ENGINE IS COLD
13 AIR FLOW WHEN IDLE AIR CONTROL (IAC) VALVE OPEN
14 FRESH AIR
15 INTAKE AIR TEMPERATURE (IAT) SENSOR

3-24-94
RS 21225

Fuel Delivery System

Figure C2-2

The fuel delivery system consists of the fuel tank, fuel pump, fuel filter, fuel pressure regulator, delivery pipe, fuel pulsation damper and the fuel injectors.

The fuel in the fuel tank is pumped by the fuel pump, filtered by the fuel filter and fed under pressure to each injector through the fuel rail. Fuel pressure applied to the fuel injector (the fuel pressure in the fuel feed pipe) is always kept higher than the pressure in the intake manifold by the fuel pressure regulator. The fuel is injected into the intake port of the cylinder head when the injector opens according to the injection signal from the Engine Control Module (ECM). The fuel relieved by the fuel pressure regulator returns through the fuel return pipe to the fuel tank.

For the structure and operation of the fuel tank and filter, refer to *Section 6C.*

Figure C2-2 - Fuel Delivery System

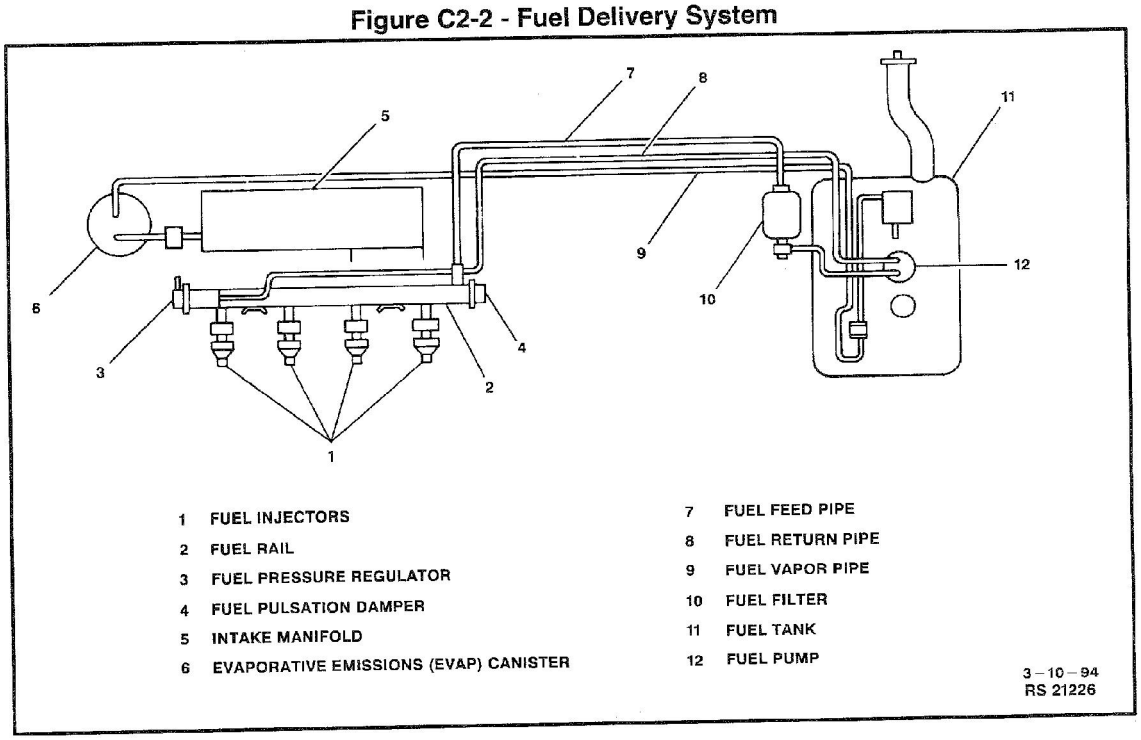

Fuel Injection Operation

Figure C2-3

In this system, the Engine Control Module (ECM) controls the "ON" time (length of pulse) and timing of the fuel injection from the fuel injector into the cylinder head intake port according to the signals from the various sensors so that a suitable air/fuel mixture is supplied to the engine in each driving condition.

There are two types of injection timing. One is "Synchronous Injection" in which injection is synchronous with the ignition signal (or signal from Camshaft Position [CMP] sensor) and the other is "Asynchronous Injection" in which injection takes place independently of the ignition signal (or signal from Camshaft Position [CMP] sensor).

The factors to determine the injection time are the basic injection time which is calculated on the basis of the engine speed and the amount of the intake air and various compensations which are determined according to the signals from various sensors that detect the state of the engine and driving conditions.

Figure C2-3 - Parameter Diagram for Fuel Injection Control System

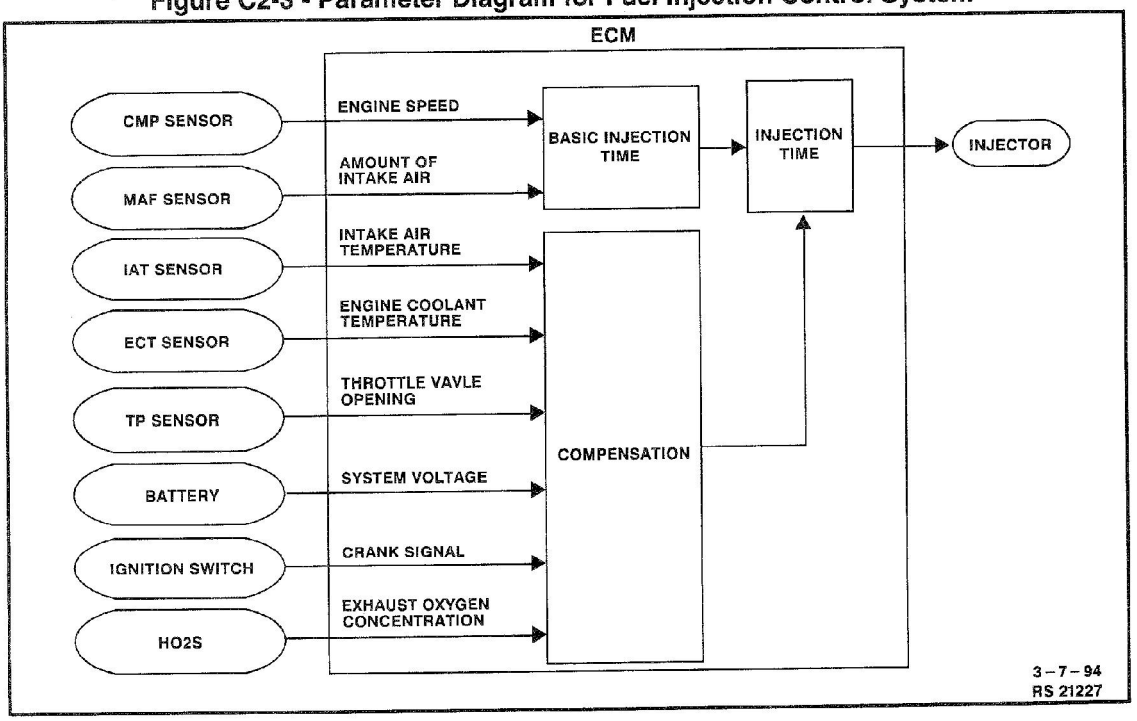

Synchronous Injection

Figures C2-4 and C2-5

When starting the engine all four fuel injectors inject fuel simultaneously and synchronously at every Camshaft Position (CMP) sensor signal. When the engine is starting at a cold state, the amount of fuel is determined by the Engine Coolant Temperature (ECT) sensor and is divided and injected (*Figure C2-4*).

Once the engine is running, fuel injection occurs in a cylinder only when it is in the exhaust stroke. The Engine Control Module (ECM) detects the compression stroke of the No. 1 cylinder through the CMP sensor signal. On the basis of this, it controls sequential fuel injection from each injector of cylinders No. 1, 3, 4 and 2 in that order (*Figure C2-5*).

Figure C2-4 - Synchronous Injection During Engine Starting

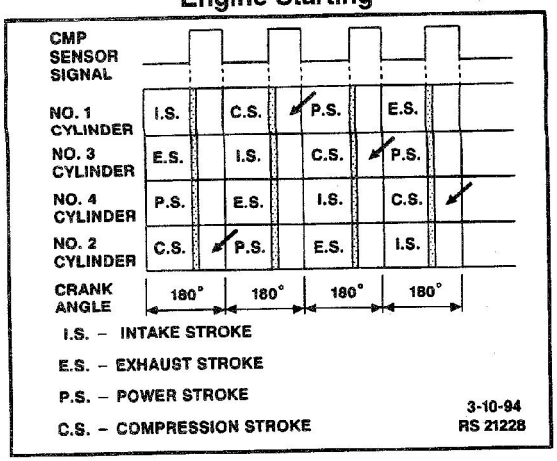

Figure C2-5 - Synchronous Injection During Engine Running

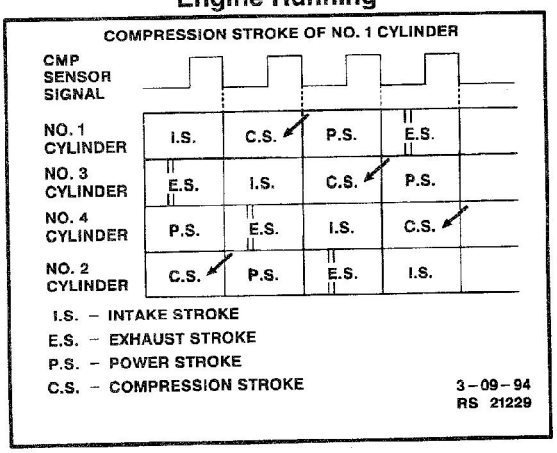

Asynchronous Injection

Figure C2-6

Whenever a change in throttle valve opening exceeds a specified value (determined by the ECM), fuel is injected into the cylinders which are in the intake and exhaust strokes simultaneously and in addition to the above synchronous injection.

Figure C2-6 - Asynchronous Injection

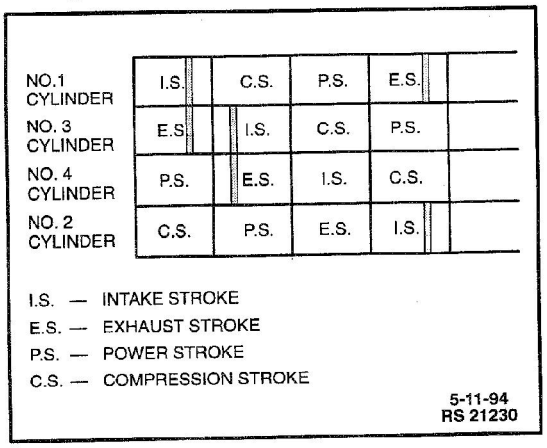

Engine Starting Enrichment

In order to improve starting performance, enriching compensation at start is carried out. For a certain time after the engine is started, air/fuel mixture is slightly enriched to stabilize the engine speed. The amount of compensation varies depending on the Engine Coolant Temperature (ECT) sensor.

Engine Warm-Up Enrichment

When the engine is cold, additional fuel is added to ensure good driveability until the Engine Coolant Temperature (ECT) sensor reaches the specified level. The amount of air/fuel mixture is decreased as the ECT sensor rises.

Acceleration Enrichment

During acceleration the fuel injector's pulse is lengthened to add more fuel. This ensures a smooth stable acceleration of the engine. The additional fuel is added based on engine coolant temperature.

Power Enrichment

To provide maximum power during high engine load driving conditions, the air/fuel mixture is made enriched when the throttle valve opening is larger than specified (ECM determined).

System Voltage Compensation

A power voltage drop delays the mechanical operation of the fuel injector. The actual injection time becomes shorter for the time that electricity is supplied to the fuel injector. To compensate for this, the fuel injector pulse is lengthened.

Base Air/Fuel Ratio Compensation

The air/fuel ratio may vary due to such factors as variation in each engine itself and aging.

To compensate such variation, feedback compensation is used and base air/fuel mixture ratio is adjusted to a proper level to maintain optimum air/fuel ratio.

Fuel Cutoff

Fuel injection stops (with operation of the fuel injector prevented) when decelerating (i.e., when the throttle valve is at idle position and the engine speed is high), so that unburned gas will not be exhausted and injection starts again when above conditions are not met.

The fuel injection also stops when the engine speed exceeds 6,800 RPM to prevent overrun which affects the engine adversely, and it starts again when the engine speed reduces to less than 6,500 RPM.

Air/Fuel Ratio Feedback Compensation ("Closed Loop" Operation)

Figure C2-7

It is necessary to keep the air/fuel mixture close to the theoretical air/fuel ratio (14.7:1) to obtain efficient performance of the three-way catalytic converter and high clarification rate of CO, HC and NOx in the exhaust gas. For that purpose, the Engine Control Module (ECM) operates as follows. First, it compares the input from the Heated Oxygen Sensor 1 (HO2S 1) with a specified reference voltage, and if the input is higher, it detects that the air/fuel ratio is richer than the theoretical air/fuel ratio and reduces fuel. If the input is lower, it detects that the air/fuel ratio is leaner and increases fuel. By repeating these operations, it adjusts the air/fuel ratio closer to the theoretical air/fuel ratio (*Figure C2-7).*

1. When oxygen concentration in the exhaust gas is low; that is, when the air/fuel ratio is smaller than the theoretical air/fuel ratio (fuel is richer), electromotive force of the HO2S 1 increases and a rich signal is sent to the ECM.
2. Upon receipt of the rich signal, the ECM decreases the amount of fuel injection, which causes oxygen concentration in the exhaust gas to increase and electromotive force of the HO2S to decrease. Then a lean signal is sent to the ECM.
3. As the ECM increases the amount of fuel injection according to the lean signal, oxygen concentration in the exhaust gas decreases and the condition is back to the situation described in Step 1.

- This control process, however, will not take place under any of the following conditions:
  - When Engine Coolant Temperature (ECT) sensor is low.
  - At fuel cutoff.
  - When HO2S 1 is cold ("Open Loop" operation).

Figure C2-7 - Fuel Feedback Compensation

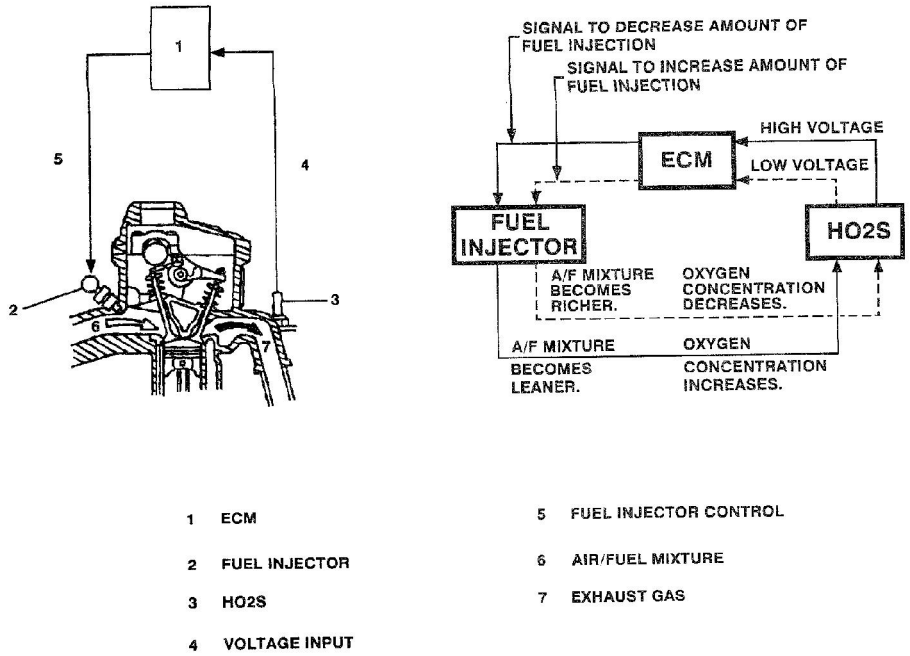

1 ECM
2 FUEL INJECTOR
3 HO2S
4 VOLTAGE INPUT
5 FUEL INJECTOR CONTROL
6 AIR/FUEL MIXTURE
7 EXHAUST GAS

3-10-94
RS 21231

Engine Idle Speed Control Operation

Engine idle speed is controlled by the Engine Control Module (ECM) through the Idle Air Control (IAC) valve which allows more/less air to bypass the throttle valve. The reasons for idle speed control

1. To keep the engine idle speed as specified at all times. The engine idle speed can vary due to the following reasons.
   - Load applied to engine (when electric load is applied, A/C is turned "ON," headlights "ON," stop lights, transmission is shifted to "R," "D," "2" or "L" range, etc.).
   - Variation in atmospheric pressure.
   - Change in engine itself with passing of time.
   - Other factors causing idle speed to change.
2. To improve starting performance of engine.
3. To compensate air/fuel mixture ratio when decelerating (dash-pot effect).
4. To improve driveability while engine is warming up.

The IAC valve opens the bypass air passage when it is energized by the ECM and closes it when de-energized.

The ECM detects the engine condition by using inputs and signals from various sensors and switches and while repeating "ON" and "OFF" cycle of the IAC valve at a certain rate (200 times a second), it controls bypass air flow (IAC valve opening) by increasing and decreasing its "ON" time within a cycle.

When the vehicle is at a stop and the throttle valve is at the idle position and the engine running, the engine speed is kept at a specified idle speed.

Throttle Body

Figure C2-8

The throttle body consists of the main bore, air bypass passage, vacuum passage (for Exhaust Gas Recirculation [EGR] system), and the following parts.

- Throttle valve which is interlocked with the accelerator pedal and controls the amount of intake air.
- Fast idle air valve which supplies the bypass air when the engine is cold.
- Idle speed adjusting screw which controls the amount of bypass air to adjust idle air control duty (engine idle speed).
- Throttle Position (TP) sensor which detects the throttle valve opening and sends a signal to the ECM.

Figure C2-8 - Throttle Body

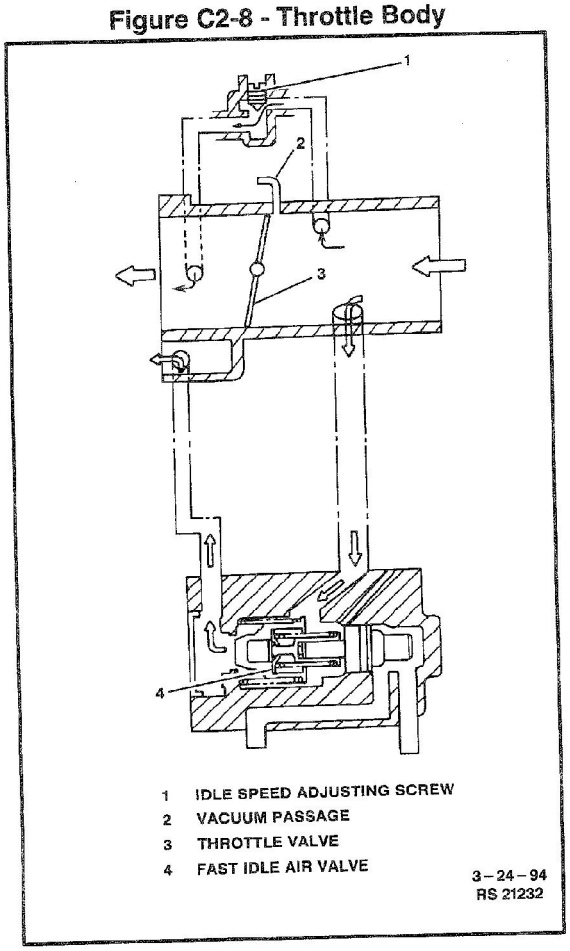

Fuel Injector

Figure C2-9

There are four injectors (one for each cylinder), each which is installed between the intake manifold and fuel rail. It is an electromagnetic type injection nozzle which injects fuel into the intake port of the cylinder head according to the signal from the Engine Control Module (ECM) (*Figure C2-9*).

When the solenoid coil of the fuel injector is energized by the ECM, it becomes an electromagnet and attracts the plunger. At the same time, the needle valve which is incorporated with the plunger opens and the fuel injector, which is under the fuel pressure, injects fuel. As the stroke of the needle valve of the fuel injector is set constant, the amount of fuel injected at one time is determined by the length of time during which the solenoid coil is energized (injection time).

Figure C2-9 - Fuel Injector Cross Section

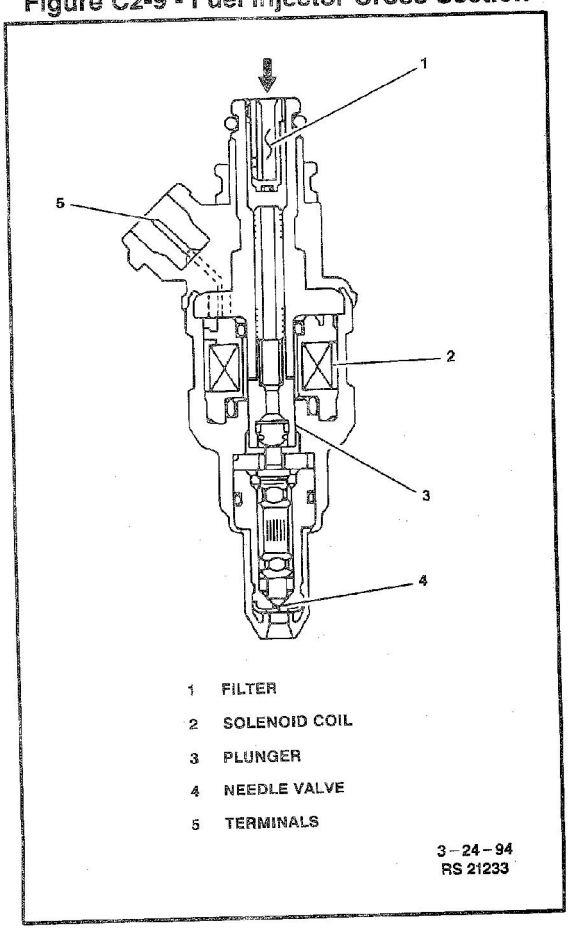

Fuel Pressure Regulator

Figure C2-10

The fuel pressure regulator is diaphragm-operated relief valve consisting of diaphragm, spring and valve. It keeps the fuel pressure applied to the fuel injector 290 kPa (41 psi) higher than that in the intake manifold at all times.

The pressure applied to chamber "A" of the fuel pressure regulator is intake manifold pressure and that to chamber "B" is fuel pressure (*Figure C2-10*). When the fuel pressure rises more than 290 kPa (41 psi) higher than the intake manifold pressure, the fuel pushes the valve in the regulator open and excess fuel returns to the fuel tank via the return pipe.

Figure C2-10 - Fuel Pressure Regulator

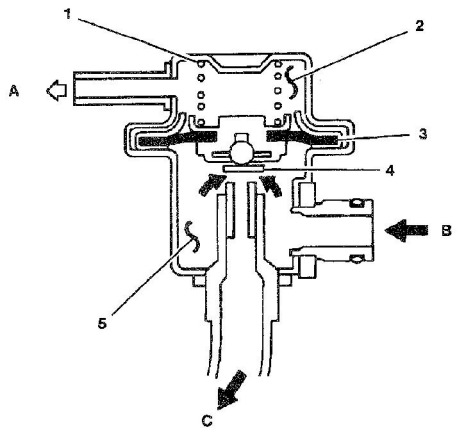

A TO INTAKE MANIFOLD
B FROM FUEL PUMP
C TO FUEL TANK
1 SPRING
2 CHAMBER "A"
3 DIAPHRAGM
4 VALVE
5 CHAMBER "B"

3-25-94
RS 21234

Fuel Pulsation Damper

Figure C2-11

The fuel pulsation damper is installed in the fuel rail. The fuel pressure applied to the fuel injectors is regulated by the fuel pressure regulator. As the fuel injectors inject fuel, a slight pulsation occurs in the fuel pressure. The fuel pulsation dampers purpose is to remove these pulsations (*Figure C2-11*).

Figure C2-11 - Fuel Pulsation Damper

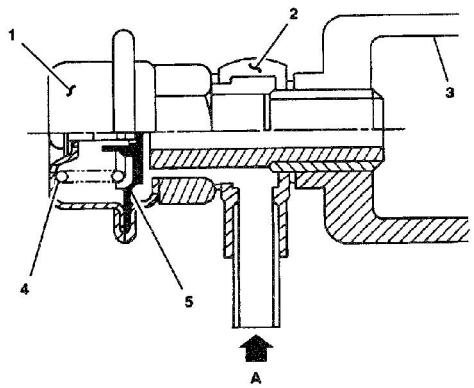

A FUEL FROM FUEL PUMP
1 FUEL PULSATION DAMPER
2 FUEL INLET UNION
3 FUEL RAIL
4 SPRING
5 DIAPHRAGM

4-21-94
RS 21235

Fast Idle Air Valve

Figure C2-12

The fast idle air valve consists of thermo-wax, springs and a valve. When the engine is cold (Engine Coolant Temperature [ECT] sensor is lower than 70°C [158°F]), the thermo-wax contracts. In this state, the valve opens by the spring force, allowing the air to be drawn into the intake manifold. Thus the amount of intake air increases even when the throttle valve is at the idle position and the engine speed rises to the fast idle state which is higher than the idle speed (*Figure C2-12*).

As the engine warms up, the thermo-wax expands gradually, the piston pushes down the valve gradually, and the amount of air passing through the fast idle air valve decreases and so does the engine speed. When the ECT reaches about 70°C (158°F), the valve is fully closed and the engine speed is back to the normal idle speed.

Figure C2-12 - Fast Idle Air Valve

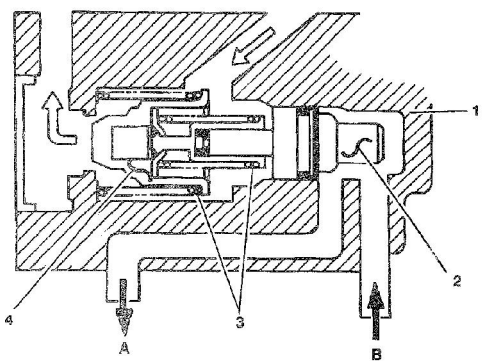

A TO INTAKE PIPE
B FROM INTAKE MANIFOLD
1 THROTTLE BODY
2 THERMO WAX
3 SPRING
4 VALVE

3-10-94
RS 21236

Idle Air Control (IAC) Valve

Figure C2-13

The Idle Air Control (IAC) valve opens and closes the air bypass passage according to the signal from the Engine Control Module (ECM). When it opens, the air is supplied to the intake manifold. This will increase engine RPM for various engine loads (*Figure C2-13*).

Figure C2-13 - Idle Air Control (IAC) Valve

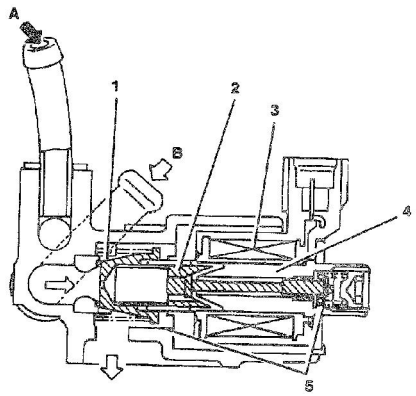

1 VALVE
2 PLUNGER
3 COIL
4 CORE
5 RETURN SPRING
A COOLANT FROM INTAKE PIPE
B AIR FROM AIR CLEANER (ACL)

3-25-94
RS 21237

On-Vehicle Service

Important: When vacuum hoses have been disconnected and system components removed for service, be sure to reinstall components properly, and route and connect hoses correctly after service. Refer to *"Vehicle Emission Control Information Label"* for proper routing of vacuum hoses.

Idle Speed/Idle Air Control (IAC) Duty Adjustment

Figures C2-14 through C2-16

Important: Before starting engine place manual selector in "P" (automatic transaxle) or place gearshift control lever in neutral (manual transaxle) and set parking brake and block drive wheels.

1. Check accelerator cable for free movement and excessive play; cable play should be within specification. Refer to *Section 6C*.
2. Inspect lead wires and hoses of the Sequential Multiport Fuel Injection (SFI) and Evaporative Emission (EVAP) control systems for being connected securely.
3. Check ignition timing, and adjust if necessary. Refer to *Section 6E3-C4*.
4. Turn "OFF" all accessories (A/C, wipers, heater, lights, etc.).
5. Make sure Air Cleaner (ACL) is installed correctly.
6. Remove cover on idle speed adjusting screw (*Figure C2-14*).

Figure C2-14 - Idle Speed Adjusting Screw

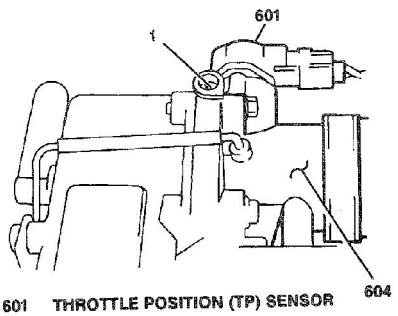

601 THROTTLE POSITION (TP) SENSOR
604 THROTTLE BODY
1 IDLE SPEED/IDLE AIR CONTROL (IAC) DUTY ADJUSTING SCREW

7-5-94
RS 21238

Adjust

- Start engine and allow it to reach normal operating temperature (accessories "OFF").

1. Connect a scan tool, monitor engine speed.
2. Connect a jumper from diagnostic request terminal "2" in the Duty Check Data Link Connector to ground terminal "4" (*Figure C2-15*).
3. Connect a DVM from the duty check terminal "6" in the Duty Check Data Link Connector to ground Terminal "4."

Notice: IAC duty can be check by using a DVM in the D/C position. To convert the voltage read obtain by using a DVM to a percentage reading us the following formula: 0.5 × voltage (indicated on DVM) = duty percentage.

4. Check idle speed and IAC duty. IAC duty should read 50% (7V) with correct engine idle speed. Refer to *Figure C2-16*.
5. Adjust idle speed as necessary. Correct idle speed by turning idle speed/Idle Air Control (IAC) duty adjusting screw.

Figure C2-15 - Duty Check Data Link Connector

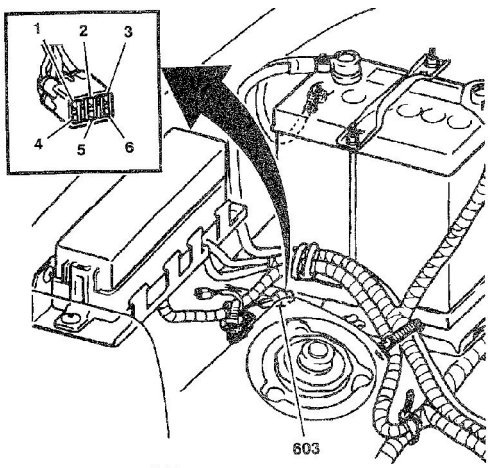

1 NOT USED
2 DIAGNOSTIC REQUEST TERMINAL
3 DIAGNOSTIC OUTPUT TERMINAL
4 GROUND TERMINAL
5 TEST SWITCH TERMINAL
6 DUTY CHECK TERMINAL
603 DUTY CHECK DATA LINK CONNECTOR (DLC)

3-25-94
RS 21209

6. Remove jumper from duty check data link connector and DVM.
7. Disconnect scan tool.
8. Install idle speed/Idle Air Control (IAC) duty adjusting screw cover.
9. Check that specified idle speed is obtained with A/C "ON," if vehicle is equipped with A/C (*Figure C2-16*). If idle speed is not as specified, check A/C idle-up circuit and Idle Air Control (IAC) valve circuit.

Figure C2-16 - Idle Speed Settings

TRANSMISSION	A/C OFF	A/C ON
MANUAL	800 ± 50 rpm	1000 ± 50 rpm
AUTOMATIC "P" OR "N"	800 ± 50 rpm	1000 ± 50 rpm
AUTOMATIC "R," "D," "2," OR "L"	800 ± 50 rpm	800 ± 50 rpm

6-16-94
RS 20854

Fuel Pressure Relief Procedure

Caution: To reduce the risk of fire and personal injury, it is necessary to relieve the fuel system pressure before servicing the fuel system.

After relieving fuel system pressure, a small amount of fuel may be released when servicing fuel pipes or connections. In order to reduce the chance of personal injury, cover fuel pipe fittings with a shop towel before disconnecting, to catch any fuel that may leak out. Place the towel in an approved container when disconnect is completed.

1. Loosen fuel filler cap to relieve fuel tank pressure.
2. Disconnect fuel pump relay electrical connector.
3. Crank engine and allow to stall. Crank engine for an additional three seconds to assure relief of any remaining fuel pressure.
4. Remove negative (-) battery cable to avoid possible fuel discharge if an attempt is made to start the engine.
5. Reconnect fuel pump relay electrical connector.
6. Tighten fuel filler cap.

Fuel Pressure Gage Installation/Removal

Figures C2-17 and C2-18

Install or Connect

Tools Required

J 34730-1 Fuel Pressure Gage

J 41011 Fuel Pressure Gage Adapter

A fuel system pressure test is a part of several diagnostic tables and symptoms checks. To perform this test, follow this procedure.

1. Relieve fuel pressure. Refer to *"Fuel Pressure Relief Procedure"* earlier in this section.
2. Remove fuel plug bolt from fuel rail (*Figure C2-17*).

Figure C2-17 - Fuel Rail Plug Bolt Removal

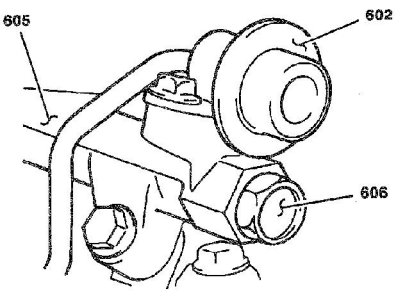

602 FUEL PRESSURE REGULATOR
605 FUEL RAIL
606 FUEL RAIL PLUG BOLT

4-27-94
RS 21239

3. Install a J 41041 Fuel Pressure Gage Adapter to fuel rail (*Figure C2-18*).
4. Install a J 34730-1 Fuel Pressure Gage to J 41041 Fuel Pressure Gage Adapter (*Figure C2-18*).
5. Reconnect negative (-) battery cable.

Tighten

- Negative (-) battery cable-to-negative (-) battery terminal retainer to 15 N•m (11 lb. ft.).

6. Start engine and idle at normal operating temperature.
7. Check fuel pressure as follows

- Idling - 210-260 kPa (30-37 psi).
- Engine not running, ignition switch in the "ON" position - 250-300 kPa (36-43 psi).
- Within one minute with engine not running, ignition switch in the "ON" position pressure should hold at about 180 kPa (26 psi).
- If pressure is not within specification, refer to *"On-Board Diagnostic (OBD) System Check"* in *Section 6E3-A.*

Figure C2-18 - Fuel Pressure Gage Installation

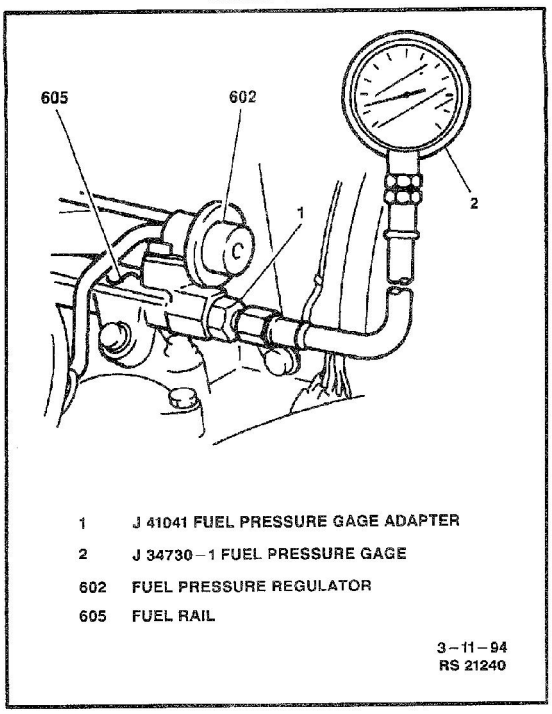

Remove or Disconnect

1. Relieve fuel system pressure. Refer to *"Fuel Pressure Relief Procedure"* earlier in this section.
2. Disconnect J 34730-1 and J 41041 from fuel rail. Use shop towel to catch any remaining fuel that may leak.
3. Install fuel rail plug bolt.

Tighten

- Fuel rail plug bolt to 45-55 N•m (33-39.5 lb. ft.).

5. Connect negative (-) battery cable.

Tighten

- Negative (-) battery cable-to-negative (-) battery terminal retainer to 15 N•m (11 lb. ft.).

6. Turn ignition switch to "ON" and then back to "OFF" to pressurize the fuel system. Check for any fuel leaks.

Fuel Pump Relay

Remove or Disconnect

1. Negative (-) battery cable.
2. Fuel pump relay electrical connector.
3. Fuel pump relay from bracket.

Install or Connect

1. Fuel pump relay to bracket.
2. Fuel pump relay electrical connector.
3. Negative (-) battery cable.

Tighten

- Negative (-) battery cable-to-negative (-) battery terminal retainer to 15 N•m (11 lb. ft.).

Throttle Body Service

Inspect

- All throttle body component parts, with the exception of those noted below, should be cleaned in a cold immersion cleaner such as Carbon X (X-55) or equivalent.

Notice: The Throttle Position (TP) sensor, fast idle air valve or other components containing rubber should not be placed in a solvent or cleaner bath. A chemical reaction will cause these parts to swell, harden or distort. Do not soak the throttle body with the above parts attached. If the throttle body requires cleaning, soaking time in the cleaner should be kept to a minimum. Some models have hidden throttle shaft dust seals that could lose their effectiveness by extended soaking.

Clean

- All metal parts thoroughly and blow dry with shop air. Be sure that all fuel and air passages are free of dirt or burns.

1. Mating casting surfaces for damage that could affect gasket sealing.
2. That the throttle valve lever moves freely and smoothly.
3. Vacuum passage: with finger placed against vacuum nozzle, increase engine speed and check for vacuum.

Throttle Body Replacement

Figures C2-19 through C2-21

Remove or Disconnect

- Relieve fuel system pressure. Refer to *"Fuel Pressure Relief Procedure"* earlier in this section.
- Drain cooling system. Refer to *Section 6B.*

1. Three bolts and throttle cover to gain access to accelerator and throttle cables.
2. Accelerator cable and throttle cable (automatic transmission) from throttle lever.
3. One clamp and air intake hose from air intake pipe.
4. Two coolant hoses, Positive Crankcase Ventilation (PCV) hose and Idle Air Control (IAC) valve air intake/hose from air intake pipe.
5. Three bolts, one clamp and air intake pipe from throttle body.
6. Throttle Position (TP) sensor electrical connector.

7. One nut, one bolt, one screw and accelerator cable bracket from throttle body.
8. Exhaust Gas Recirculation Solenoid Vacuum valve vacuum hose from throttle body.
9. Two coolant hoses from throttle body.
10. One nut, one bolt and throttle body and gasket from intake manifold.

Disassemble

Important: Be sure not to remove the fast idle air valve from the throttle body. It is not serviceable. It is calibrated at the factory and is not adjustable.

1. Two screws and Throttle Position (TP) sensor from throttle body.

Clean

- Clean passages by blowing compressed air.

Notice: The TP sensor, fast idle air valve or other components containing rubber must not be cleaned in a solvent or parts bath. A chemical reaction will cause the parts to swell, harden or distort.
Do not clean passages with drills or wires, these may damage the passages.

Figure C2-19 - Accelerator and Throttle Cable Removal

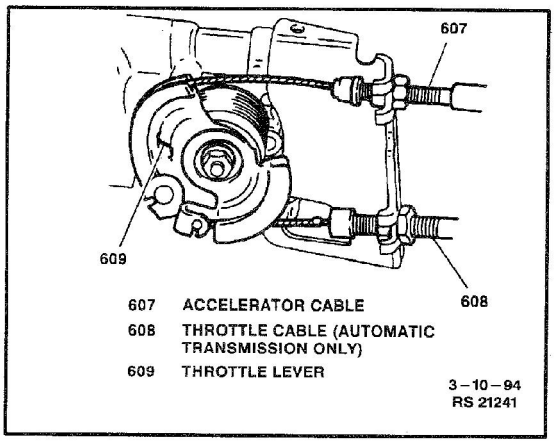

Figure C2-20 - Air Intake Pipe Removal

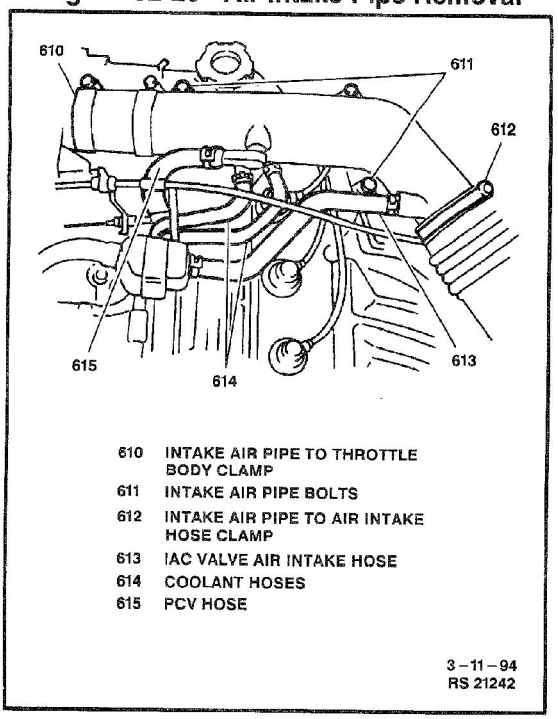

Figure C2-21 - Throttle Body Removal

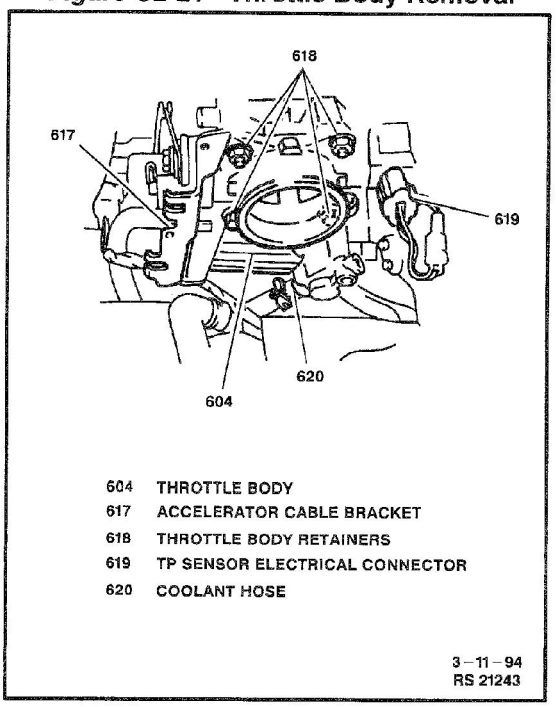

Assemble

1. TP sensor to throttle body, secure with two screws. Do not tighten fully.

Install or Connect

1. New gasket and throttle body to intake manifold; secure with one nut and one bolt.

Tighten

- Throttle body bolt and nut to 18-28 N•m (13.5-20 lb. ft.).

2. Two coolant hoses to throttle body.
3. EGR solenoid vacuum valve vacuum hose to throttle body.
4. Accelerator cable bracket to throttle body; secure with one nut, one bolt and one screw.

Tighten

- Throttle body nut and bolt to 18-28 N•m (13.5-20 lb. ft).

5. TP sensor electrical connector.
6. Air intake pipe to throttle body; secure with one clamp and three bolts.

Tighten

- Three air intake pipe bolts to 15 N•m (11 lb. ft.).

7. Two coolant hoses, PCV valve hose and IAC valve air intake hose to air intake pipe.
8. Air intake hose to air intake pipe; secure with one clamp.
9. Accelerator cable and throttle cable (automatic transmission) to throttle lever.
10. Throttle cover; secure with three bolts.

Tighten

- Throttle cover bolts to 15 N•m (11 lb. ft.).

11. Negative (-) battery cable.

Tighten

- Negative (-) battery cable-to-negative (-) battery terminal retainer to 15 N•m (11 lb. ft.).

Adjust

1. Accelerator cable. Refer to *Section 6C.*
2. Throttle valve cable. Refer to *Section 7A.*
3. TP sensor. Refer to *Section 6E3-C1.*

- Refill engine coolant to proper level. Refer to *Section 6B.*
- Turn ignition switch to "ON" and then back to "OFF" to pressurize the fuel system. Check for any fuel leaks.

Fuel Injectors And Fuel Rail

Figures C2-19 through C2-28

Remove or Disconnect

1. Throttle body. Refer to "*Throttle Body Replacement*" earlier in this section.
2. Exhaust Gas Recirculation (EGR) pressure transducer from EGR pressure transducer bracket.
3. Two bolts and EGR pressure transducer bracket from intake manifold.
4. Four fuel injector connectors.
5. Two bolts and fuel pressure regulator from fuel rail.
6. Fuel pulsation damper and fuel feed pipe from fuel rail.
7. Three bolts and fuel rail from intake manifold.
8. Four fuel injectors from intake manifold.

Figure C2-22 - EGR Pressure Transducer Bracket Removal

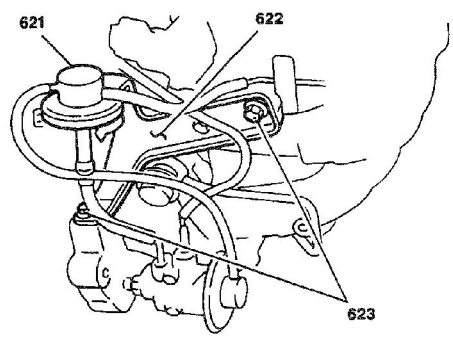

621 EGR PRESSURE TRANSDUCER

622 EGR PRESSURE TRANSDUCER BRACKET

623 EGR PRESSURE TRANSDUCER BRACKET BOLTS

6-9-94
RS 21244

Figure C2-23 - Fuel Pressure Regulator Removal

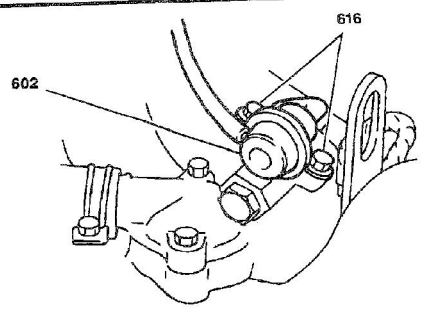

602 FUEL PRESSURE REGULATOR
616 FUEL PRESSURE REGULATOR BOLTS

3-10-94
RS 21245

Figure C2-24 - Fuel Pulsation Damper Removal

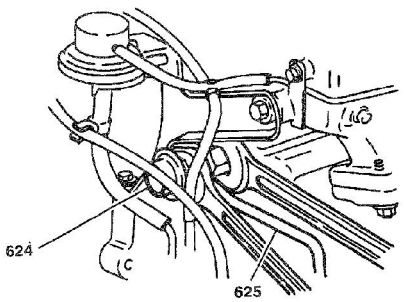

624 FUEL PULSATION DAMPER
625 FUEL FEED PIPE

3-10-94
RS 21246

Install or Connect

1. Replace fuel injector O-ring with new ones taking care not to damage them.
2. Grommets to fuel injectors.

Inspect

- Insulators for breakage or scoring. If damaged, replace insulator(s).

3. Insulators and cushions to intake manifold.
4. Apply thin coat of fuel to O-rings. Install injectors to fuel rail and then the whole assembly to the intake manifold.

Figure C2-25 - Fuel Injector Removal

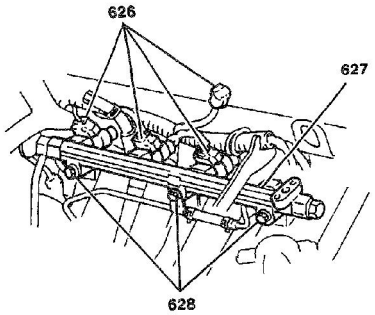

626 FUEL INJECTOR ELECTRICAL CONNECTORS
627 FUEL RAIL
628 FUEL RAIL BOLTS

4-27-94
RS 21247

Figure C2-26 - Fuel Injection Installation

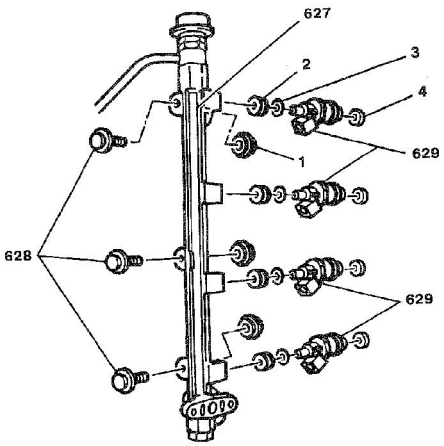

1 INSULATOR
2 GROMMET
3 O-RING
4 CUSHION
627 FUEL RAIL
628 FUEL RAIL BOLTS
629 FUEL INJECTORS

3-10-94
RS 21248

Figure C2-27 - Insulators and Cushions Installation

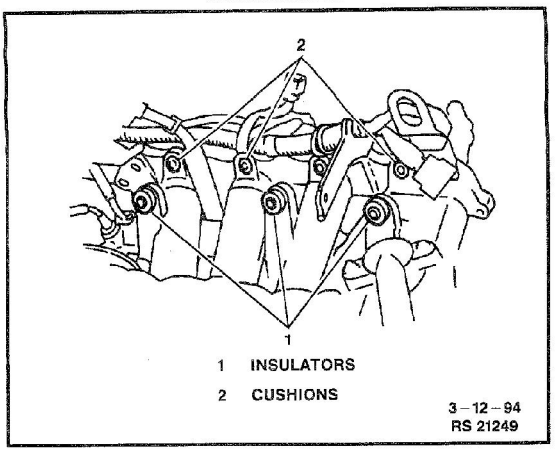

Notice: Make sure that the fuel injectors rotate smoothly. If not, probable cause is an incorrectly installed O-ring, replace with a new one.

5. Three bolts to fuel rail.

Tighten

- Three fuel rail bolts to 18-28 N•m (13-20 lb. ft.).

Notice: Make sure that the fuel injectors rotate smoothly.

Figure C2-28 - Checking Fuel Injectors for Proper Installation

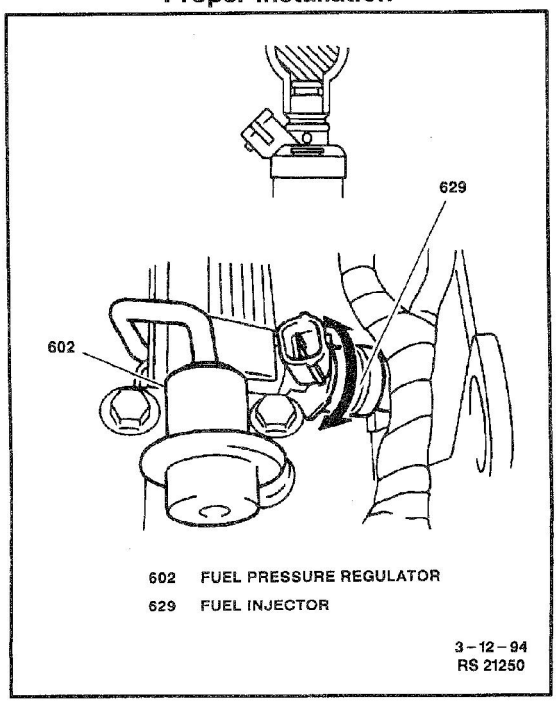

6. Fuel feed pipe, fuel pulsation damper and new gasket to fuel rail.

Notice: Apply thin coat of engine oil to new gaskets.

Tighten

- Fuel pulsation damper to 25-35 N•m (18.5-25 lb. ft.).

7. Fuel pressure regulator; secure with two bolts.

Tighten

- Fuel pressure regulator bolts to 8-12 N•m (6-8.5 lb. ft.).

8. Four fuel injector connectors.
9. EGR pressure transducer bracket to intake manifold; secure with two bolts.

Tighten

- EGR pressure transducer bracket bolts to 23 N•m (17 lb. ft.).

10. EGR pressure transducer to EGR pressure transducer bracket.
11. Throttle body. Refer to *"Throttle Body Replacement"* earlier in this section.

Fuel Pressure Regulator

Figures C2-23 and C2-29

Remove or Disconnect

1. Relieve fuel system pressure. Refer to *"Fuel Pressure Relief Procedure"* earlier in this section.
2. Negative (-) battery cable.
3. Vacuum hose from fuel pressure regulator.
4. Fuel return hose from fuel pressure regulator.
5. Two bolts and fuel pressure regulator from fuel rail. Use a shop towel to catch any remaining fuel.

Figure C2-29 - Installing Fuel Pressure Regulator

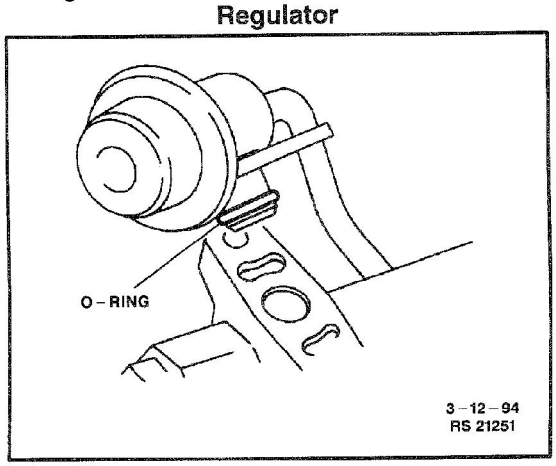

Install or Connect

- Apply a thin coat of oil to new O-ring.

1. Fuel pressure regulator to fuel rail; secure with two bolts.

Tighten

- Two fuel pressure regulator bolts to 8-12 N•m (6-8.5 lb. ft.).

2. Fuel return hose and vacuum hose to fuel pressure regulator.
3. Negative (-) battery cable.

Tighten

- Negative (-) battery cable-to-negative (-) battery terminal retainer to 15 N•m (11 lb. ft.).
- Turn ignition switch to "ON" and then back to "OFF" to pressurize the fuel system. Check for any fuel leaks.

Fuel Pulsation Damper

Figures C2-24

Remove or Disconnect

1. Relieve fuel system pressure. Refer to *"Fuel Pressure Relief Procedure"* earlier in this section.
2. Negative (-) battery cable.
3. Damper from fuel rail. Use a shop towel to catch any remaining fuel.

Install or Connect

- Apply a thin coat of oil to the new gasket.

1. Fuel pulsation damper and new gasket to fuel rail.

Tighten

- Fuel pulsation damper to 25-35 N•m (18.5-25 lb. ft.) using a backup wrench.

2. Negative battery cable.

Tighten

- Negative (-) battery cable-to-negative (-) battery terminal retainer to 15 N•m (11 lb. ft.).
- Turn ignition switch to "ON" and then back to "OFF" to pressurize the fuel system. Check for any fuel leaks.

Idle Air Control (IAC) Valve

Figure C2-30

Remove or Disconnect

1. Negative (-) battery cable.
2. Three bolts and throttle cover.
3. IAC valve air intake hose.
4. IAC valve electrical connector.
5. Coolant hoses from IAC valve.
6. Two bolts and IAC valve from intake manifold.

Figure C2-30 - IAC Valve Removal

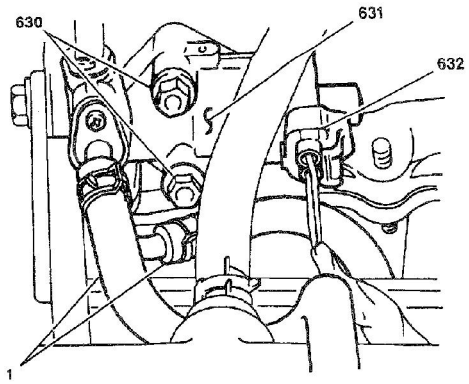

1	COOLANT HOSES
630	IAC VALVE BOLTS
631	IAC VALVE
632	IAC VALVE ELECTRICAL CONNECTOR

3-12-94
RS 21252

Install or Connect

1. IAC valve and new gasket to intake manifold; secure with two bolts.

Tighten

- IAC valve bolts to 18-28 N•m (13.5-20 lb. ft.).

2. Coolant hoses to IAC valve; secure with two clamps.
3. IAC valve electrical connector.
4. IAC valve air intake hose to IAC valve; secure with one clamp.
5. Throttle cover; secure with three bolts.

Tighten

- Throttle cover bolts to 15 N•m (11 lb. ft.).

6. Negative (-) battery cable.

Tighten

- Negative (-) battery cable-to-negative (-) battery terminal retainer to 15 N•m (11 lb. ft.).

Specifications

Engine Fastener Tightening Specifications

Application	N•m	Lb Ft	Lb In
Negative (-) Battery Cable-to- Negative (-) Battery Terminal Retainer	15	11	—
Fuel Rail Plug Bolt	45-55	33-39.5	—
Throttle Cover Bolts	15	11	—
Throttle Body Bolts and Nuts	18-28	13.5-20	—
Air Intake Pipe Bolts	15	11	—
Fuel Rail Bolts	18-28	13.5-20	—
Fuel Pulsation Damper	25-35	18.5-25	—
Fuel Pressure Regulator Bolts	8-12	6-8.5	—
EGR Pressure Transducer Bracket Bolts	23	17	—
IAC Valve Bolts	18-28	13.5-20	—

Fuel Injector Coil Test Procedure - Engine Coolant Temperature 10°C-35°C (50°F-95°F)

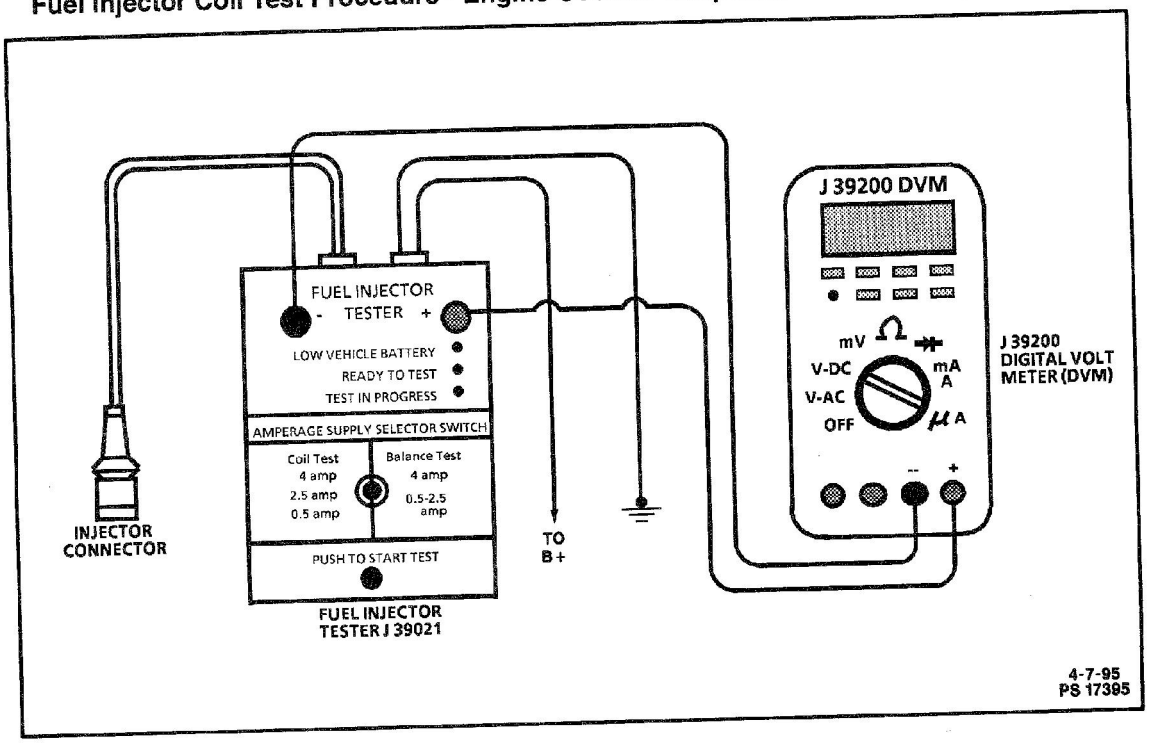

Test Description

Caution: In order to reduce the risk of fire and personal injury, wrap a shop towel around the fuel pressure connection. The towel will absorb any fuel leakage that occurs during the connection of the fuel pressure gage. Place the towel in an approved container when the connection of the fuel pressure gage is complete.

2. The engine coolant temperature affects the ability of the fuel injector tester to detect a faulty fuel injector. If the engine coolant temperature is NOT between 10°C and 35°C (50°F and 95°F), go to *Fuel Injector Coil Test Procedure - Engine Coolant Temperature Less Than 10°C* (50°F) or Greater Than 35°C (95°F).
3. The first second of the voltage displayed by the DVM may be inaccurate due to the initial current surge, therefore, record the lowest voltage displayed by the DVM after the first second of the test. The voltage displayed by the DVM should be within the specified range (refer to the *Example*). The voltage displayed by the DVM may increase throughout the test as the fuel injector windings warm and the resistance of the fuel injector windings changes. An erratic voltage reading (large fluctuations in voltage that do not stabilize) indicates an intermittent connection within the fuel injector.

Example

Resistance Ohms	Voltage Specification at 10°C - 35°C (50°F - 95°F)	
11.8-12.6	5.6-6.5	
Fuel Injector Number	**Voltage Reading**	**Pass/Fail**
1	6.3	P
2	5.9	P
3	6.2	P
4	6.1	P
5	***4.8***	***F***
6	6.0	P

Fuel Injector Coil Test Procedure - Engine Coolant Temperature 10°C-35°C (50°F-95°F)

Step	Action	Value(s)	Yes	No
1	Was the On-Board Diagnostic (OBD) System Check performed?	—	Go to Step 2	Go to *Powertrain OBD System Check*
2	1. Connect the scan tool. 2. Check the engine coolant temperature. Is the engine coolant temperature within the specified limits?	10°C-35°C (50°F-95°F)	Go to Step 3	Go to *Fuel Injector Coil Test Procedure - Engine Coolant Temperature Less Than 10°C (50°F) or Greater Than 35°C (95°F)*
3	1. Turn the ignition "OFF." ***Notice:*** In order to prevent flooding of a single cylinder and possible engine damage, relieve the fuel pressure before performing the fuel injector coil test procedure. 2. Relieve the fuel pressure. Refer to the *Fuel Pressure Relief Procedure* in *Section 6E3-C2.* 3. Access the fuel injector electrical connectors as required and connect J 34730-3A fuel injector test adapter to fuel injector. 4. Connect the J 39021 fuel injector tester to B+ and ground. 5. Set the amperage supply selector switch on the fuel injector tester to the "Coil Test" 0.5 amp position. 6. Connect the leads from the J 39200 Digital Volt Meter (DVM) to the fuel injector tester. Refer to the *illustration* associated with the test description. 7. Set the DVM to the tenths scale (0.0). 8. Connect the fuel injector tester to a fuel injector. **Important:** Check the engine coolant temperature again to ensure that the correct Table is being used. 9. Press the "Push to Start Test" button on the fuel injector tester. 10. Observe the voltage reading on the DVM. **Important:** The voltage reading may rise during the test. 11. Record the lowest voltage observed after the first second of the test. 12. Repeat Steps 8 through 11 for each fuel injector. Did any fuel injector have an erratic voltage reading (large fluctuations in voltage that do not stabilize) or a voltage reading outside of the specified limits?	5.6-7.0 volts	Go to Step 4	Go to *Injector Balance Test*
4	Replace the faulty fuel injector(s). Refer to the *Fuel Injector* procedure in *On-Vehicle Service* in *Section 6E3-C2.* Is the replacement complete?	—	Go to *Injector Balance Test*	—

Fuel Injector Coil Test Procedure - Engine Coolant Temperature Less Than 10°C (50°F) or Greater Than 35°C (95°F)

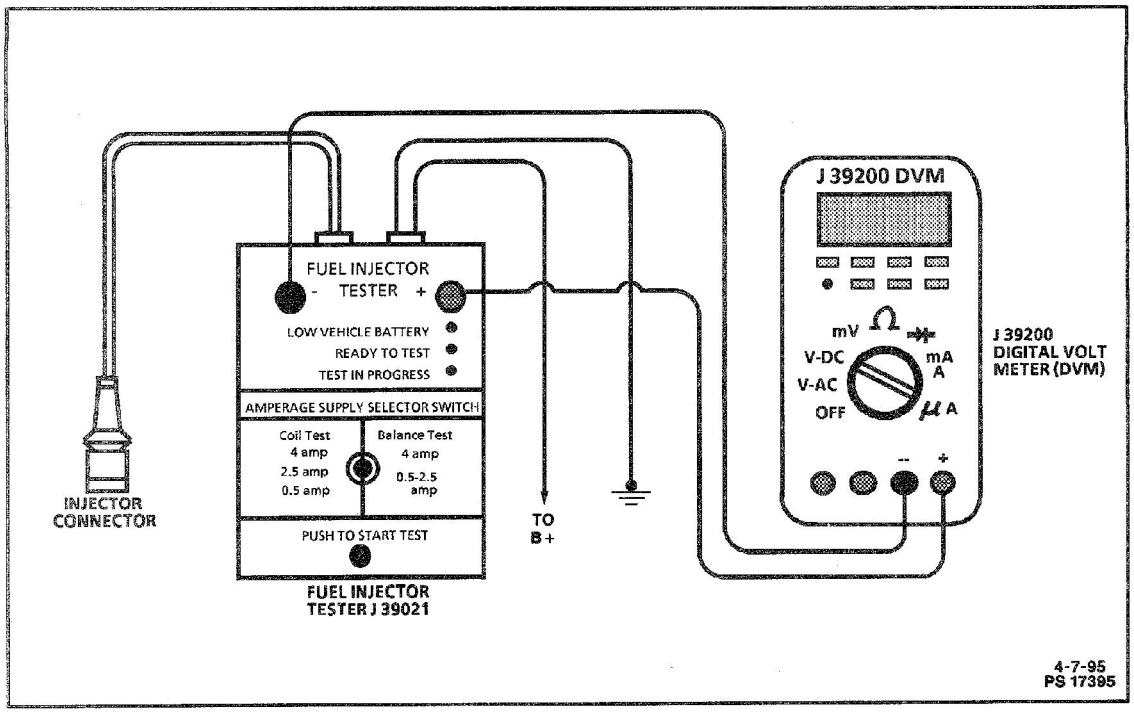

Test Description

Caution: In order to reduce the risk of fire and personal injury, wrap a shop towel around the fuel pressure connection. The towel will absorb any fuel leakage that occurs when installing the fuel pressure gage. Place the towel in an approved container when the installation of the fuel pressure gage is complete.

2. The engine coolant temperature affects the ability of the fuel injector tester to detect a faulty fuel injector. If the engine coolant temperature is between 10°C-35°C (50°F-95°F), go to *Fuel Injector Coil Test Procedure - Engine Coolant Temperature 10°C-35°C (50°F-95°F).*
3. The first second of the voltage displayed by the DVM may be inaccurate due to the initial current surge, therefore, record the lowest voltage displayed by the DVM after the first second of the test. The voltage displayed by the DVM may increase throughout the test as the fuel injector windings warm and the resistance of the fuel injector windings changes. An erratic voltage reading (large fluctuations in voltage that do not stabilize) indicates an intermittent connection within the fuel injector.

   From the voltages recorded, identify the highest voltage, excluding any voltages above 9.5 volts. Subtract each voltage that is not above 9.5 volts from the highest voltage. Record each subtracted value (refer to the *Example*). The subtracted value for any fuel injector must not exceed 0.6 volt. A fuel injector with a subtracted value that is greater than 0.6 volt is considered faulty and must be replaced. A fuel injector with a recorded voltage above 9.5 volts is also considered faulty and must be replaced.

Example

Highest Voltage Reading		Acceptable Subtracted Value Above/Below 10°C - 35°C (50°F - 95°F)	
7.1 Volts		0.6 Volt	
Injector Number	**Voltage**	**Subtracted Value**	**Pass/Fail**
1	9.8	—	F
2	6.6	0.5	P
3	6.9	0.2	P
4	***5.8***	***1.3***	***F***
5	7.0	0.1	P
6	7.1	0.0	P

Fuel Injector Coil Test Procedure - Engine Coolant Temperature Less Than 10°C (50°F) or Greater Than 35°C (95°F)

Step	Action	Value(s)	Yes	No
1	Was the On-Board Diagnostic (OBD) System Check performed?	—	Go to Step 2	Go to *OBD System Check*
2	1. Connect the scan tool. 2. Check the engine coolant temperature. Is the engine coolant temperature within the specified limits?	Less Than 10°C (50°F) or Greater Than 35°C (95°F)	Go to Step 3	Go to *Fuel Injector Coil Test Procedure - Engine Coolant Temperature 10°C-35°C (50°F-95°F)*
3	1. Turn the ignition "OFF." ***Notice:*** In order to prevent flooding of a single cylinder and possible engine damage, relieve the fuel pressure before performing the fuel injector coil test procedure. 2. Relieve the fuel pressure. Refer to the *Fuel Pressure Relief Procedure* in *Section 6E3-C2.* 3. Access the fuel injector electrical connectors as required and connect J 34730-3A fuel injector test adapter to fuel injector. 4. Connect the J 39021 fuel injector tester to B+ and ground. 5. Set the amperage supply selector switch on the fuel injector tester to the "Coil Test" 0.5 amp position. 6. Connect the leads from the J 39200 Digital Volt Meter (DVM) to the fuel injector tester. Refer to the *illustration* associated with the test description. 7. Set the DVM to the tenths scale (0.0). 8. Connect the fuel injector tester to a fuel injector. **Important:** Check the engine coolant temperature again to ensure that the correct Table is being used. 9. Press the "Push to Start Test" button on the fuel injector tester. 10. Observe the voltage reading on the DVM. **Important:** The voltage reading may rise during the test. 11. Record the lowest voltage observed after the first second of the test. 12. Repeat Steps 8 through 11 for each fuel injector. 13. Identify the highest voltage reading recorded other than those above 9.5 volts. 14. Subtract any other voltage reading recorded from the highest voltage reading recorded. 15. Repeat Step 14 for all of the remaining fuel injectors. Is any value that resulted from subtraction greater than the specified value?	0.8 volts	Go to Step 4	Go to *Injector Balance Test*
4	Replace any fuel injector that had any of the following: • A subtracted value exceeding 0.6 volts. • An initial reading above 9.5 volts. • An erratic reading. Refer to the *Fuel Injector* procedure in *On-Vehicle Service* in *Section 6E3-C2.* Is the replacement complete?	—	Go to *Injector Balance Test*	—

Fuel Injector Balance Test Procedure

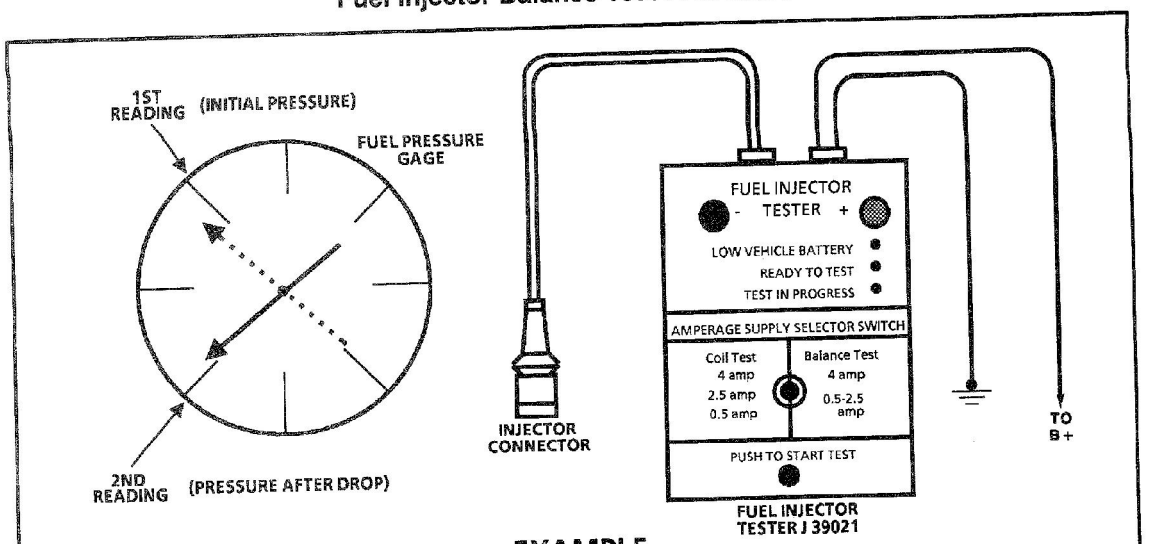

EXAMPLE

CYLINDER	1	2	3	4	5	6
1ST Reading	296 kPa (43 psi)	296 kPa (43 psi)	296 kPa (43 psi)	296 kPa (43 psi)	296 kPa (43 psi)	296 kPa (43 psi)
2ND Reading	131 kPa (19 psi)	117 kPa (17 psi)	124 kPa (18 psi)	145 kPa (21 psi)	131 kPa (19 psi)	130 kPa (19 psi)
Amount of Drop (1st Reading - 2nd Reading)	165 kPa (24 psi)	179 kPa (26 psi)	172 kPa (25 psi)	151 kPa (22 psi)	165 kPa (24 psi)	166 kPa (24 psi)
166 kPa/24 psi ave. ± 10 kPa/1.5 psi 156 kPa to 176 kPa 22.5 psi to 25.5 psi	OK	FAULTY, RICH (TOO MUCH FUEL DROP)	OK	FAULTY, LEAN (TOO LITTLE FUEL DROP)	OK	OK

4-7-95
PS 17399

Test Description

Caution: In order to reduce the risk of fire and personal injury, wrap a shop towel around the fuel pressure connection. The towel will absorb any fuel leakage that occurs when installing the fuel pressure gage. Place the towel in an approved container when the installation of the fuel pressure gage is complete.

4. The engine coolant temperature must be below the operating temperature in order to avoid irregular fuel pressure readings due to "Hot Soak" fuel boiling.
5. The fuel pressure should be within the specified range. If the fuel pressure is not within the specified range, go to *Fuel System Diagnosis.*
6. The fuel pressure should reach a steady value. If the fuel pressure does not reach a steady value, go to *Fuel System Diagnosis.*
7. If the pressure drop value for each fuel injector is within 10 kPa (1.5 psi) of the average pressure drop value, the fuel injectors are flowing properly. Calculate the pressure drop value for each fuel injector by subtracting the second pressure reading from the first pressure reading. Refer to the *illustration* above.

Fuel Injector Balance Test Procedure

Step	Action	Value(s)	Yes	No
1	Was the On-Board Diagnostic (OBD) System Check performed?	—	Go to Step 2	Go to *OBD System Check*
2	Was the Fuel Injector Coil Test Procedure performed?	—	Go to Step 3	Go to *Fuel Injector Coil Test Procedure*
3	Is the engine coolant temperature above the specified value?	94°C (201°F)	Go to Step 4	Go to Step 5
4	Allow the engine to cool below the specified value. Is the engine coolant temperature below the specified value?	94°C (201°F)	Go to Step 5	—
5	***Caution: In order to reduce the risk of fire and personal injury, wrap a shop towel around the fuel connection. The towel will absorb any fuel leakage that occurs when installing the fuel pressure gage. Place the towel in an approved container when the installation of the fuel pressure gage is complete.*** 1. Install the fuel pressure gage. 2. Energize the fuel pump by turning the ignition switch "ON," and "OFF." ***Notice:*** Ignition switch may need to be cycled more than once to attain maximum pressure. 3. Place the bleed hose of the fuel pressure gage into an approved gasoline container. 4. Bleed the air out of the fuel pressure gage. 5. Observe the reading on the fuel pressure gage. Is the fuel pressure within the specified limits?	250-300 kPa (36-43 psi)	Go to Step 6	Go to *Fuel System Diagnosis*
6	Turn the fuel pump "OFF." Does the fuel pressure remain constant?	—	Go to Step 7	Go to *Fuel System Diagnosis*

Fuel Injector Balance Test Procedure (continued)

Step	Action	Value(s)	Yes	No
7	1. Connect J 34730-3A fuel injector adapter and J 39021 fuel injector tester to a fuel injector. 2. Set the amperage supply selector switch on the fuel injector tester to the "Balance Test" 0.5-2.5 amp position. 3. Energize the fuel pump by turning the ignition switch "ON," and "OFF." ***Notice:*** *Ignition switch may need to be cycled more than once to attain maximum pressure.* 4. Record the fuel pressure indicated by the fuel pressure gage after the fuel pressure stabilizes. This is the 1st pressure reading. 5. Energize the fuel injector by depressing the "Push to Start Test" button on the fuel injector tester. 6. Record the fuel pressure indicated by the fuel pressure gage after the fuel pressure gage needle has stopped moving. This is the 2nd pressure reading. 7. Repeat Steps 1 through 6 for each fuel injector. 8. Subtract the 2nd pressure reading from the 1st pressure reading for one fuel injector. The result is the pressure drop value. 9. Obtain a pressure drop value for each fuel injector. 10. Add all of the individual pressure drop values. This is the total pressure drop. 11. Divide the total pressure drop by the number of fuel injectors. This is the average pressure drop. Does any fuel injector have a pressure drop value that is either higher than the average pressure drop or lower than the average pressure drop by the specified value?	10 kPa (1.5 psi)	Go to Step 8	Go to *Symptoms, Section B*
8	***Notice:*** Do Not repeat any portion of this test before running the engine in order to prevent the engine from flooding. Re-test any fuel injector that does not meet the specification. Refer to the procedure in Step 7. Does any fuel injector still have a pressure drop value that is either higher than the average pressure drop or lower than the average pressure drop by the specified value?	10 kPa (1.5 psi)	Go to Step 9	Go to *Symptoms, Section B*
9	Replace the faulty fuel injector(s). Refer to the *Fuel Injector* procedure in *On-Vehicle Service* in *Section 6E3-C2.* Is the replacement complete?	—	Go to *OBD System Check*	—