SECTION 9B

CRUISE CONTROL

NOTICE: Always use the correct fastener in the proper location. When you replace a fastener, use ONLY the exact part number for that application. General Motors will call out those fasteners that require a replacement after removal. General Motors will also call out the fasteners that require thread lockers or thread sealant. UNLESS OTHERWISE SPECIFIED, do not use supplemental coatings (paints, greases, or other corrosion inhibitors) on threaded fasteners or fastener joint interfaces. Generally, such coatings adversely affect the fastener torque and joint clamping force, and may damage the fastener. When you install fasteners, use the correct sequence and tightening specifications. Following these instructions can help you avoid damage to parts and systems.

CONTENTS

GENERAL DESCRIPTION

Cruise control is a speed control system that maintains a desired vehicle speed under normal driving conditions. However, steep grades up or down may cause variations in the selected speeds. This cruise control system has the capability to cruise, coast, resume speed and accelerate.

The main components of the cruise control system are:

- Actuator
- Clutch Pedal Position (CPP) interrupt switch (manual transmission only)
- Cruise control mode switch ("RESUME/ACCEL, COAST/SET & CANCEL")
- Cruise control module
- Cruise control on/off switch ("CRUISE CTRL")
- Engine Control Module (ECM)
- Transmission range switch (automatic transmission only)
- Stoplamp switch
- Vehicle Speed Sensor (VSS) (at speedometer)

The cruise control module and the actuator are the two main components that allow the system to control and maintain the desired vehicle speed. The cruise control module monitors vehicle speed and provides the cruise control actuator with the necessary commands to maintain or change vehicle speed in response to inputs from the cruise control switch.

Upon receiving a command, a DC servo motor inside the actuator turns a worm gear which, in turn, moves an accelerator cable to adjust throttle angle. The DC servo motor and the worm gear are mechanically connected only when a magnetic clutch, situated between them, is energized by the cruise control module.

Cruise control operation is disengaged when the cruise control module receives a cancel signal from the stoplamp switch, the cruise control on/off switch ("CRUISE CTRL"), the cruise control mode switch ("RESUME/ACCEL, COAST/SET & CANCEL"), the transmission range switch (automatic transmission), or the clutch pedal position (CPP) interrupt switch (manual transmission). Upon receiving a cancel signal, the cruise control module de-energizes the magnetic clutch inside the cruise control actuator. With the

magnetic clutch de-energized, the DC servo motor and worm gear are no longer mechanically connected and the throttle returns to the idle position.

CRUISE CONTROL MODULE

The cruise control module is located on the left side of instrument panel. The main function of the cruise control module is to monitor and act upon input signals from the cruise control on/off switch ("CRUISE CTRL"), the cruise control mode switch ("RESUME/ACCEL, COAST/SET & CANCEL") and the vehicle speed sensor (VSS) (speedometer).

There are four different categories of input signals received by the cruise control module. These four categories are on/off, speed control, throttle position and cancel.

The on/off input signal to the cruise control module is provided by the cruise control on/off switch ("CRUISE CTRL") and simply activates and deactivates the cruise control system.

The speed control input signals to the cruise control module are provided by the cruise control mode switch ("RESUME/ACCEL, COAST/SET & CANCEL") and the vehicle speed sensor (VSS).

Speed control input signals provided by the cruise control mode switch are the "RESUME/ACCEL" (resume/accelerate) signal and the "COAST/SET" signal. The cruise control module uses these signals, in addition to the vehicle speed signal from the VSS, to determine and maintain or alter vehicle speed in accordance with the driver's commands. The throttle position signals to the cruise control module are provided by the engine control module (ECM) by means of a throttle position (TP) sensor. These signals, as their names suggest, allow the cruise control module to constantly monitor throttle position during cruise control system operation.

The cancel input signals to the cruise control module are provided by the cruise control switch "CANCEL" button, the stoplamp switch, the transmission range switch (automatic transmission), or the clutch pedal position (CPP) interrupt switch (manual transmission). These input signals inform the cruise control module that cruise control operation should be immediately suspended.

Output signals from the cruise control module are all sent to the cruise control actuator and will vary depending upon the type of input signals received.

If, for example, the cruise control module senses that vehicle speed has dropped below the desired cruise speed, an output signal will be sent to the "OPEN" side of the DC servo motor within the cruise control actuator. This action will cause the motor to turn the worm gear, open the throttle, and increase vehicle speed until the desired cruise speed is achieved.

If the cruise control module should sense that vehicle speed is above the desired cruise speed, an output signal is sent to the "CLOSE" side of the DC servo motor within the cruise control actuator. This action will cause the motor to turn in the opposite direction, close the throttle, and decrease vehicle speed until the desired cruise speed is achieved.

Finally, should a cancel input signal be received, the cruise control module de-energizes the magnetic clutch within the actuator. This action disengages the DC servo motor from the worm gear, causing the throttle to go to the idle position and effectively canceling cruise control operation.

CRUISE CONTROL ACTUATOR

The actuator is mounted to the right inner fender and consists of a DC servo motor, a worm gear and a magnetic clutch. Acting in response to signals from the cruise control module, the actuator's DC servo motor actuates an accelerator cable to increase and decrease throttle angle.

VEHICLE SPEED SENSOR (VSS)

The VSS is mounted on the speedometer. As the speedometer turns the VSS, the VSS provides a vehicle speed output. The cruise control module converts this input into vehicle speed.

CLUTCH PEDAL POSITION (CPP) INTERRUPT SWITCH

Manual Transmission Equipped Vehicles

The clutch pedal position (CPP) interrupt switch is mounted under the instrument panel directly above the clutch pedal. Whenever the clutch pedal is depressed, the CPP interrupt switch closes and provides a ground to the cruise control module. The cruise control module disengages cruise control system operation as soon as this ground signal is sensed.

TRANSMISSION RANGE SWITCH

Automatic Transmission Equipped Vehicles

The transmission range switch is mounted to the transmission. Whenever the manual selector lever is placed in either the "P" (Park) or "N" (Neutral) position, the transmission range switch closes and provides a ground to the cruise control module. The cruise control module disengages cruise control system operation as soon as this ground signal is sensed.

STOPLAMP SWITCH

The stoplamp switch is located under the instrument panel directly above the brake pedal. Whenever the brake pedal is depressed, one set of stoplamp switch contacts close and a voltage signal is provided to the cruise control module. The cruise control module disengages cruise control system operation as soon as this voltage signal is sensed.

When the brake pedal is depressed, another set of stoplamp switch contacts open, and the voltage circuit from the cruise control module to the magnetic clutch inside the actuator is interrupted. With voltage removed from the magnetic clutch, the actuators DC servo motor is disengaged from the worm gear and the throttle is permitted to return to the idle position. This feature is provided to ensure the cancellation of cruise control system operation during vehicle braking.

THROTTLE POSITION (TP) SENSOR

The TP sensor supplies a throttle position voltage signal input to the Engine Control Module (ECM). The ECM converts TP sensor signal into a throttle duty signal. This duty signal is relative to the rate at which the throttle plate is opening. The cruise control module uses this information to determine throttle opening angle.

"CRUISE" INDICATOR

The "CRUISE" indicator, located in the instrument cluster, lights to inform the driver that the cruise control system is operational.

CRUISE CONTROL SWITCHES

Cruise Control On/Off Switch ("CRUISE CTRL")

Figure 1

The cruise control on/off switch ("CRUISE CTRL") has two momentary contact type buttons. This switch is located on the instrument panel, to the right of the steering wheel (Figure 1). The purpose of the "CRUISE CTRL" switch is to turn the cruise control system ON and OFF.

"RESUME/ACCEL" Switch

Figure 2

The "RESUME/ACCEL" (resume/accelerate) switch, part of the cruise control mode switch, returns cruise control system operation to the last speed setting after a cancel input signal is received by the cruise control module (such as vehicle braking).

This switch is activated when the cruise control switch is momentarily rotated clockwise (Figure 2). Do not hold the cruise control switch in this position. Release it immediately. If the cruise control switch is held in the "RESUME/ACCEL" position for more than one second, the system goes into the accelerate mode.

If acceleration during cruise control system operation is desired, rotate the cruise control switch to the "RESUME/ACCEL" position and hold it there until the vehicle reaches the desired speed. When the cruise control switch is released, the cruise control system will maintain the new cruise speed.

In order to use the accelerate mode, the "CRUISE CTRL" switch button must have been pressed, the "CRUISE" indicator must be lit, and the vehicle speed must be over 40 km/h (25 mph).

The "RESUME/ACCEL" switch can also be used to increase vehicle speed in 1.6 km/h (1 mph) increments. In order to do this, the cruise control system must be engaged and operating. This is performed by quickly rotating the cruise control mode switch to the "RESUME/ACCEL" position and releasing it. One twist equals 1.6 km/h [1 mph] increase. Do not hold the cruise control switch in the "RESUME/ACCEL" position, or the cruise control system will enter the accelerate mode.

"COAST/SET" Switch

Figure 2

The "COAST/SET" switch, part of the cruise control mode switch, is activated when the cruise control switch is rotated counterclockwise into the "COAST/SET" position (Figure 2).

When the cruise control switch is rotated to the COAST/SET position and released, the cruise speed will be set at the speed at which the vehicle was traveling when the switch was activated. In order for this switch to operate, however, the "CRUISE CRTL" switch button must have been pressed, the "CRUISE" indicator must be lit, and the vehicle speed must be over 40 km/h (25 mph).

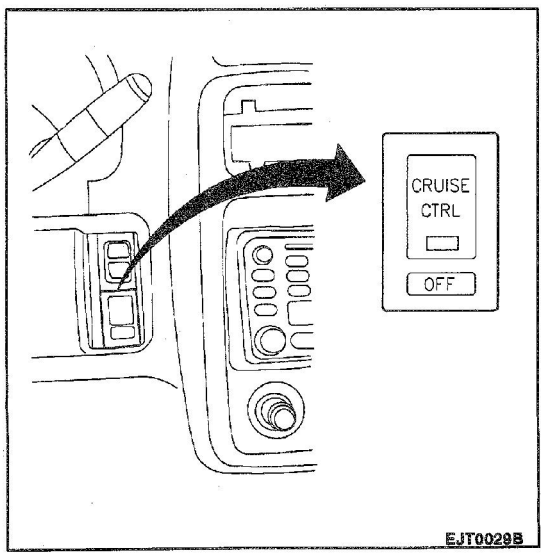

Figure 1—Cruise Control On/Off Switch ("CRUISE CTRL") Location

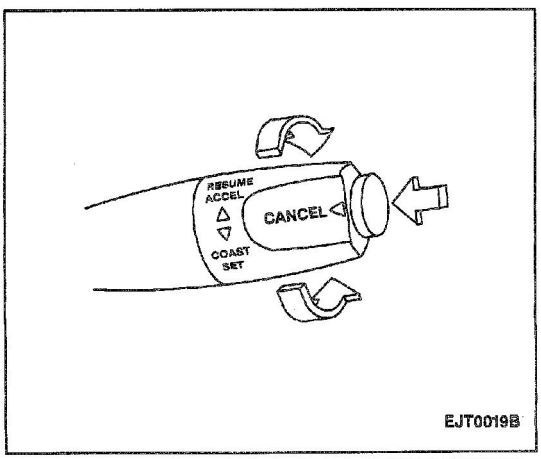

Figure 2—Cruise Control Mode Switch ("RESUME/ACCEL, COAST/SET & CANCEL")

The "COAST/SET" switch can also be used to decrease the cruise speed. By rotating the cruise control switch counterclockwise to the "COAST/SET" position and holding it there, the cruise control system will disengage and allow the throttle to return to the idle position. When the new, lower cruise speed has been reached, the cruise control switch is released from the "COAST/SET" position. Once released, the cruise control system will re-engage and maintain the new desired cruise speed.

The "COAST/SET" switch can also be used to decrease vehicle speed in 1.6 km/h (1 mph) increments. In order to do this, the cruise control system must be engaged and operating. This is performed by quickly rotating the cruise control mode switch to the "COAST/SET" position and releasing it. One twist equals 1.6 km/h [1 mph] decrease. Do not hold the cruise control switch in the "COAST/SET" position, or the cruise control system will enter the coast mode.

The accelerator may be depressed at any time to override cruise control system operation. Release of the accelerator will return the vehicle to the previously set cruise speed.

"CANCEL" Button

Figure 2

The "CANCEL" button is part of the cruise control mode switch. When depressed, it signals the cruise control module to immediately suspended cruise control operation.

CAUTION: To keep the vehicle under control, and to prevent possible personal injury and vehicle damage, the cruise control system should not be used on slippery or winding roads or in traffic of heavy or varying volume. When traveling down a steeply graded hill, the cruise control system should be disengaged by depressing the brake pedal lightly. The transmission can then be shifted into a lower gear range to help control vehicle speed.

DIAGNOSIS INFORMATION

Problems occurring with the cruise control system can be caused by either the electrical or the mechanical components. These two areas should be completely isolated before proceeding with diagnosis. Diagnosis should begin with the simplest operation first, working up in order of difficulty.

Mechanical Inspection

- Check that the cruise control cable is connected to both the actuator and to the accelerator lever assembly.
- Check that the cruise control cable and accelerator lever are able to move freely.
- Check the cruise control module and the actuator for bare, broken or disconnected wires.

If the mechanical inspection reveals no abnormalities and the cruise control electrical system is inoperative, refer to ELECTRICAL DIAGNOSIS (SECTION 8A-34-0).

ON-VEHICLE SERVICE

CRUISE CONTROL MODULE

Figure 3

Remove or Disconnect

1. Negative (-) battery cable from negative (-) battery terminal.
2. Electronic Brake Control Module (EBCM) harness guide clip from bracket near cruise control module (if equipped with ABS).
3. Cruise control module electrical connector (Figure 3).
4. Two bolts and cruise control module from vehicle (Figure 3).

Install or Connect

1. Cruise control module into vehicle; secure with two bolts.
2. EBCM harness guide clip to bracket (if equipped with ABS).
3. Cruise control module electrical connector.

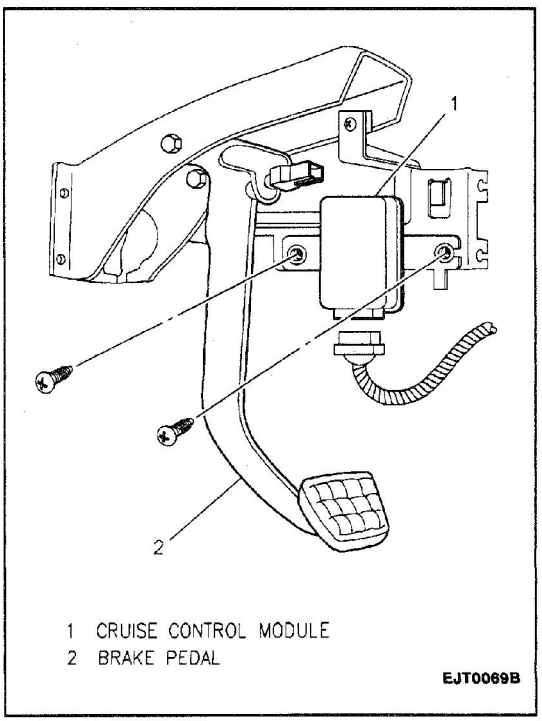

Figure 3—Cruise Control Module

4. Negative (-) battery cable to negative (-) battery terminal.

Tighten

- Negative (-) battery cable-to-negative (-) battery terminal retainer to 15 N.m (11 lbs. ft.).

CRUISE CONTROL MODE SWITCH ("RESUME/ACCEL, COAST/SET & CANCEL")

For the cruise control mode switch ("RESUME/ACCEL, COAST/SET & CANCEL") replacement procedures, refer to SECTION 3F4.

CRUISE CONTROL ON/OFF SWITCH ("CRUISE CTRL")

Figure 4

Remove or Disconnect

1. Negative (-) battery cable.
2. Four screws and knee bolster trim panel (Figure 4).
3. Pull gently top portion of knee bolster trim panel to release two clips and knee bolster trim cover from instrument panel.
4. Two bolts and knee bolster from instrument panel.
5. Clip on the bottom of "CRUISE CTRL/OFF" switch by pushing up with a pick from behind (inside the instrument panel).
6. Slide out "CRUISE CTRL/OFF" switch from instrument panel.
7. Electrical connector from "CRUISE CTRL/OFF" switch.

Install or Connect

1. Electrical connector to "CRUISE CTRL/OFF" switch.

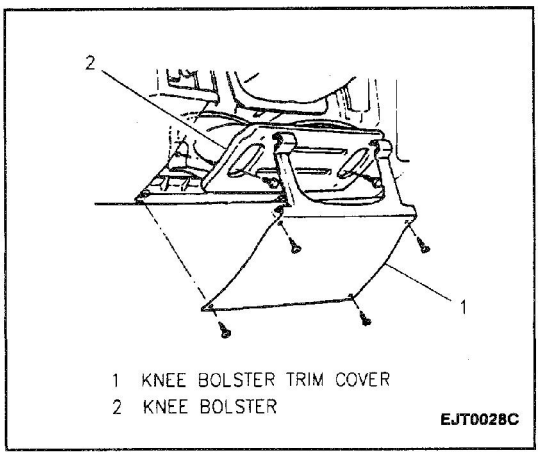

Figure 4—Knee Bolster Trim Cover

2. Slide "CRUISE CTRL/OFF" switch into place.

Install or Connect

3. Knee bolster; secure with four bolts.

Tighten

- Knee bolster bolts to 10 N.m (89 lbs. in.).

4. Knee bolster trim panel; secure with four screws and two clips.
5. Negative (-) battery cable.

Tighten

- Negative (-) battery cable-to-negative battery terminal retainer to 15 N.m (11 lbs. ft.).

STOPLAMP SWITCH

For stoplamp switch replacement and adjustment procedures, refer to SECTION 5.

TRANSMISSION RANGE SWITCH

Automatic Transmission Only

For transmission range switch replacement and adjustment procedures, refer to SECTION 7A.

CLUTCH PEDAL POSITION (CPP) INTERRUPT SWITCH

Manual Transmission Only

Figures 5, 6 and 7

Remove or Disconnect

1. Negative (-) battery cable from negative (-) battery terminal.
2. Clutch Pedal Position (CPP) interrupt switch electrical connector from CPP interrupt switch.
3. Loosen the CPP interrupt switch locknut (Figure 5).
4. CPP interrupt switch with CPP interrupt switch lockout from brake pedal bracket by turning counterclockwise.

Install or Connect

1. CPP interrupt switch with CPP interrupt switch locknut into brake pedal bracket by turning clockwise.

Adjust

Tool Required
J 39200 Digital Multimeter (DVM)

- CPP switch by following these steps:

A. Insert the probes of the DVM into either side of the CPP switch electrical connector.

B. Depress the clutch pedal to within 20 to 30 mm (0.8 to 1.2 in.) from the floor (Figure 6).
C. Screw the CPP switch clockwise into the brake pedal bracket until continuity is obtained (Figure 7).

Tighten

- CPP switch locknut to 13 N.m (115 lbs. in.)

2. CPP switch electrical connector to CPP switch.

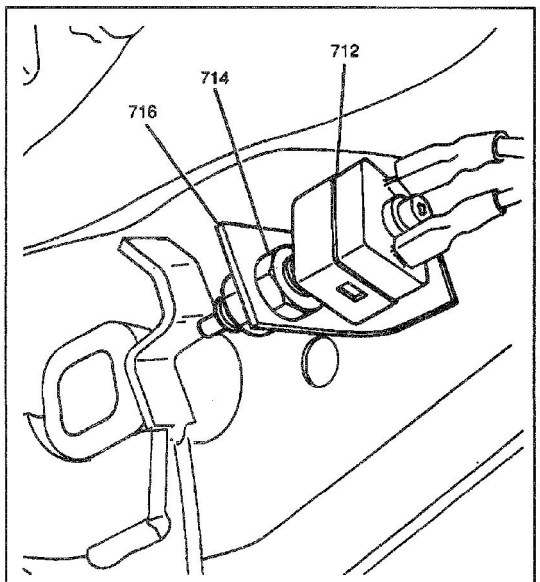

712 CLUTCH PEDAL POSITION (CPP) SWITCH
714 CPP SWITCH LOCKNUT
716 BRAKE PEDAL BRACKET
EJS0087C

Figure 5—Clutch Pedal Position (CPP) Interrupt Switch at Brake Pedal Bracket

3. Negative (-) battery cable to negative (-) battery terminal.

Tighten

- Negative (-) battery cable-to-negative battery terminal retainer to 15 N.m (11 lbs. ft.).

CRUISE CONTROL ACTUATOR

Figures 8, 9 and 10

Remove or Disconnect

1. Negative (-) battery cable from negative (-) battery terminal.
2. Three screws and cruise control actuator cover from cruise control actuator (Figure 8).

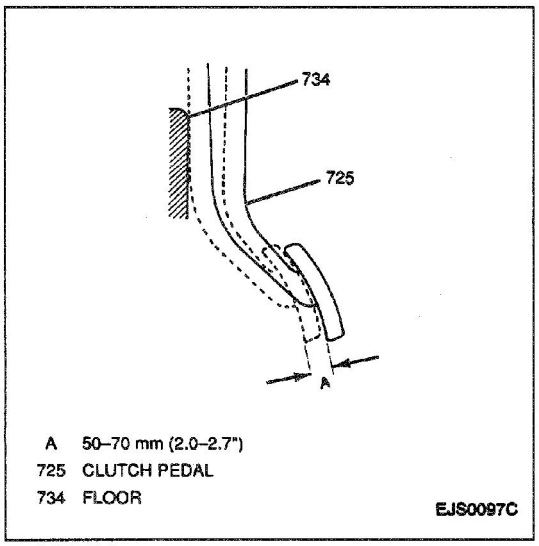

A 50–70 mm (2.0–2.7")
725 CLUTCH PEDAL
734 FLOOR
EJS0097C

Figure 6—Clutch Pedal Distance from Floor for Clutch Pedal Position (CPP) Interrupt Switch Adjustment

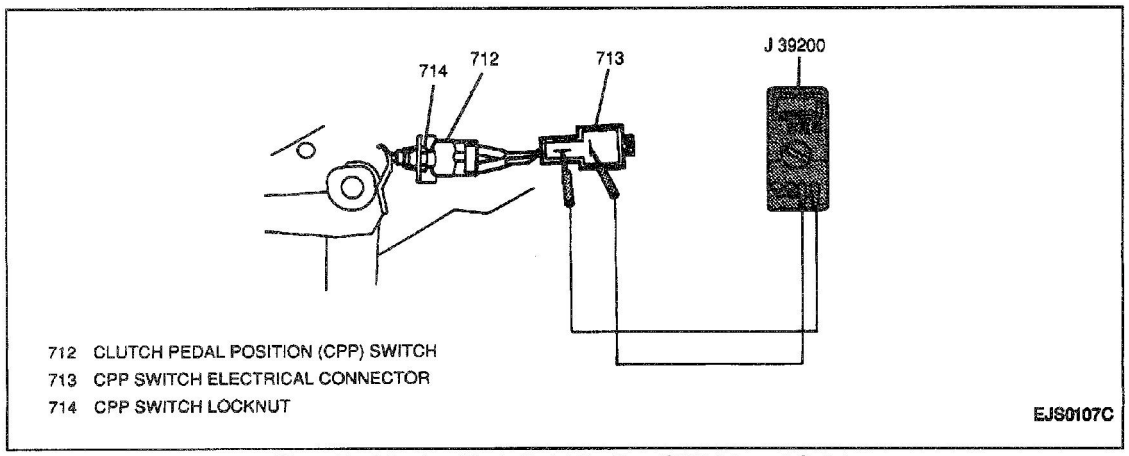

712 CLUTCH PEDAL POSITION (CPP) SWITCH
713 CPP SWITCH ELECTRICAL CONNECTOR
714 CPP SWITCH LOCKNUT
EJS0107C

Figure 7—Adjusting Clutch Pedal Position (CPP) Interrupt Switch

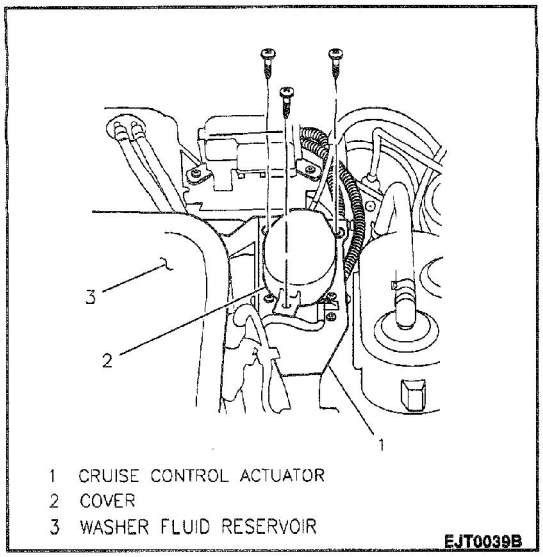

Figure 8—Cruise Control Actuator (Servo)

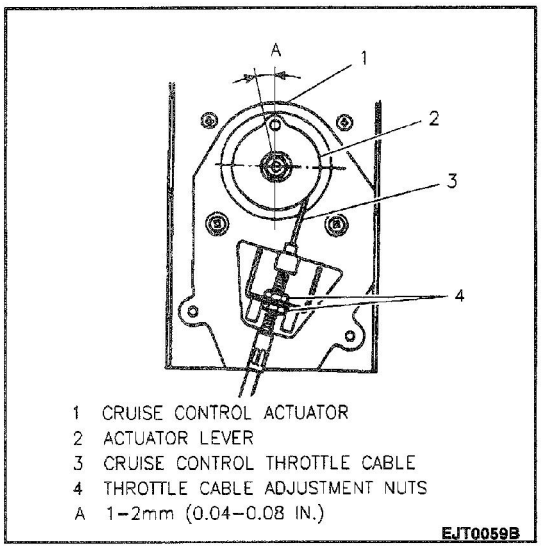

Figure 9—Cruise Control Actuator Internal View

3. Loosen the cruise control cable locknut (Figure 9).
4. Cruise control cable from cruise control actuator lever (Figure 9).
5. Harness loop securing washer pump and cruise control electrical harness.
6. Cruise control actuator electrical connector.
7. Three bolts and cruise control actuator from vehicle (Figure 8).

Install or Connect

1. Cruise control actuator to vehicle; secure with three bolts.

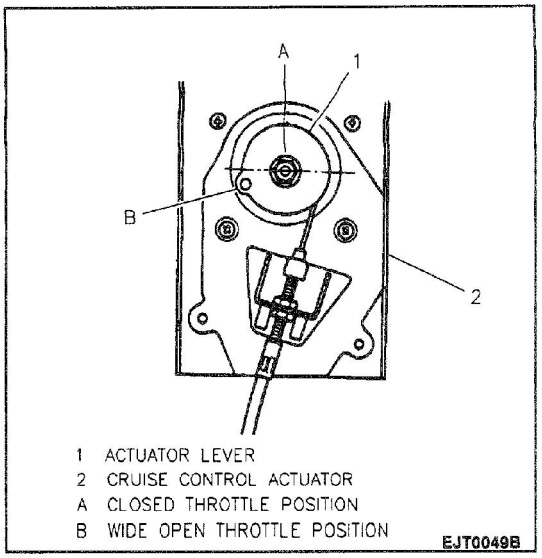

Figure 10—Cruise Control Actuator Positions

Tighten

- Cruise control actuator bolts to 10 N·m (89 lbs. ft.).

2. Cruise control actuator electrical connector.
3. Harness loop securing washer pump and cruise control electrical harness.
4. Cruise control cable to cruise control actuator lever.

Adjust

- Cruise control cable play by adjusting the cruise control cable locknuts. Cruise control cable play: 1 to 2 mm (0.04 to 0.08 in.) at actuator closed throttle position. (Figures 9 and 10).

Tighten

- Cruise control cable locknuts to 5 N·m (44 lbs. in.).

5. Cruise control actuator cover onto cruise control actuator; secure with three screws.
6. Negative (-) battery cable-to-negative (-) battery terminal

Tighten

- Negative (-) battery cable-to-negative (-) battery terminal retainer to 15 N·m (11 lbs. ft.).

CRUISE CONTROL CABLE

Figures 8, 9 and 10

Remove or Disconnect

1. Three screws and cruise control actuator cover from cruise control actuator (Figure 8).

2. Loosen the cruise control cable locknut (Figure 9).
3. Cruise control cable from cruise control actuator lever.
4. Cruise control cable from underhood guide clips.
5. Cruise control cable from cruise control bellcrank above accelerator pedal.
6. Unclip cruise control cable from underneath instrument panel.

Inspect

- Cruise control cable for fraying or excessive wear. Replace as necessary.

Install or Connect

1. Cruise control cable into vehicle; secure with guide clips.
2. Cruise control cable to cruise control bellcrank above accelerator pedal.
3. Cruise control cable into underhood guide clips.
4. Cruise control cable into cruise control actuator lever and bracket.

Adjust

- Cruise control cable play by adjusting the cruise control cable locknuts. Cruise control cable play: 1 to 2 mm (0.04 to 0.08 in.) at actuator closed throttle position. (Figures 9 and 10).

Tighten

- Cruise control cable locknuts to 5 N.m (44 lbs. in.).

5. Cruise control actuator cover onto cruise control actuator; secure with three screws.

SPECIFICATIONS

GENERAL SPECIFICATIONS

Cruise Control Cable Play at Closed Throttle Position	1 to 2 mm (0.04 to 0.08 in.)

FASTENER TIGHTENING SPECIFICATIONS

Clutch Pedal Position (CPP) Interrupt Switch Locknut	13 N.m (115 lbs. in.)
Cruise Control Actuator Bolts	10 N.m (89 lbs. in.)
Cruise Control Cable Locknuts	5 N.m (44 lbs. in.)
Knee Bolster Bolts	10 N.m (89 lbs. in.)
Negative (-) Battery Cable-to-Negative (-) Battery Terminal Retainer	15 N.m (11 lbs. ft.)

SPECIAL TOOLS

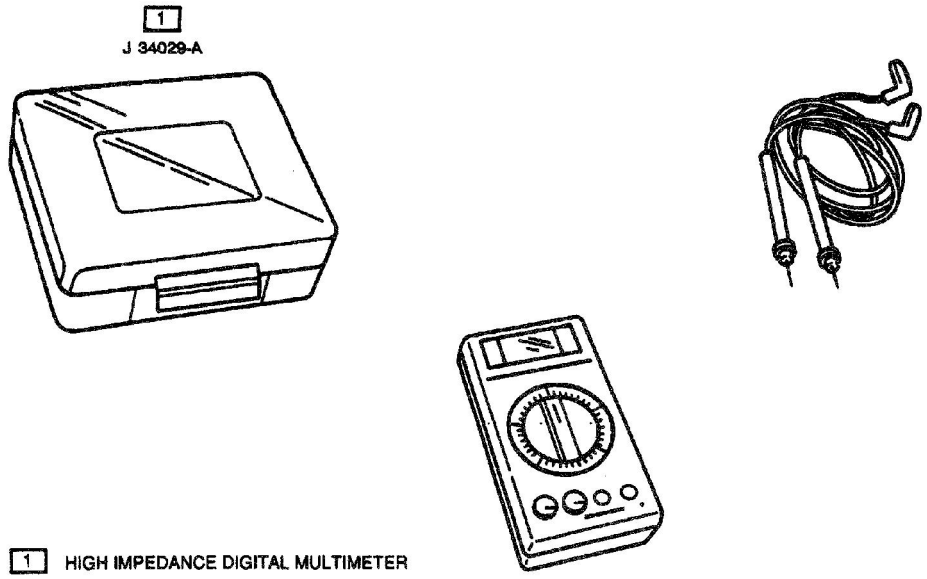

1 HIGH IMPEDANCE DIGITAL MULTIMETER

EJS0215E

BLANK