SECTION 3A

WHEEL ALIGNMENT

CAUTION: This vehicle is equipped with a Supplemental Inflatable Restraint (SIR). Refer to CAUTIONS in Section 9J under "ON-VEHICLE SERVICE" and the SIR component and wiring Locations View in Section 9J before performing service on or around SIR components or wiring. Failure to follow CAUTIONS could result in possible air bag deployment, personal injury or otherwise unneeded SIR repairs.

NOTICE: Always use the correct fastener in the proper location. When you replace a fastener, use ONLY the exact part number for that application. General Motors will call out those fasteners that require a replacement after removal. General Motors will also call out the fasteners that require thread lockers or thread sealant. UNLESS OTHERWISE SPECIFIED, do not use supplemental coatings (paints, greases, or other corrosion inhibitors) on threaded fasteners or fastener joint interfaces. Generally, such coatings adversely affect the fastener torque and joint clamping force, and may damage the fastener. When you install fasteners, use the correct sequence and tightening specifications. Following these instructions can help you avoid damage to parts and systems.

CONTENTS

GENERAL DESCRIPTION

Wheel alignment refers to the angular relationship between the front wheels, the front suspension attaching parts, and the ground. Generally, the only adjustment required for front alignment is toe setting. Camber and caster cannot be adjusted for this vehicle. Therefore, should camber or caster be out of specification due to the damage caused by hazardous road conditions or collision, the damaged components must be identified and replaced.

The angle of the knuckle away from vertical (when viewed from the front of the vehicle) and the tilt of the suspension members from vertical (when viewed from the side of the vehicle) are involved in alignment.

A complete wheel alignment check should be performed when a service check is deemed necessary. Complete wheel alignment includes the measurement of all four wheels. Such alignment assures that the four wheels will be running in precisely the same direction.

When the vehicle is geometrically in alignment, fuel economy and tire life are increased and steering and performance are maximized.

CASTER

Caster is the tilting of the upper most point of the steering axis either forward or backward from the vertical (when viewed from the side of the vehicle). A backward tilt is positive (+) and a forward tilt is negative (-). Caster influences directional control of the steering, but does not affect tire wear.

Caster is affected by vehicle height; therefore, it is important to keep the body at its designed height. Overloading the vehicle or a weak or sagging rear spring will affect the caster. When the rear of the vehicle is lower than its designated trim height, the front suspension moves to a more positive caster. If the rear of the vehicle is higher than its designated trim height, the front suspension moves to a less positive caster. Refer to "Alignment Specifications" at the end of this section for caster specifications.

CAMBER

Figure 1

Camber is the tilting of the wheels from the vertical when viewed from the front of the vehicle. When the wheels tilt outward at the top, the camber is positive (+). When the wheels tilt inward, the camber is negative (-). The amount of tilt measured in degrees from the vertical is the camber angle. Camber influences both directional control and tire wear. Refer to "Alignment Specifications" at the end of this section for camber specifications.

TOE

Figures 1 and 2

Toe is a measurement of how much the front of the wheels are turned in or out from the geometric centerline. When the wheels are turned in (toe-in), toe is "positive" (+). When the wheels are turned out (toe-out), toe is "negative" (-). The actual amount of toe is normally only a fraction of a degree. The purpose of toe is to ensure that the wheels roll parallel.

Toe also serves to offset the small deflections of the wheel support system which occurs when the vehicle is rolling forward. In other words, even when the wheels are set to toe in or out slightly when the vehicle is standing still, they tend to roll parallel on the road when the vehicle is moving. Toe also affects tire wear. Refer to "Alignment Specifications" at the end of this section for toe specifications.

STEERING ANGLE

Steering Axis Inclination

Steering axis inclination is the tilt (at the top) of the steering knuckle from vertical. It is the angle between true vertical and a line through the center of the strut and lower ball joint as viewed from the front of the vehicle.

Included Angle

The included angle is the angle measured from the camber angle to the line through the center of the strut and lower ball joint as viewed from the front of the vehicle.

Scrub Radius

The scrub radius is the distance between the line through the center of the strut and the lower ball joint to the road surface, and the actual 0 degree or true vertical.

Set Back

The set back is the distance in which one front wheel may be rearward of the other front wheel.

Turning Angle

Figure 3

The angle of each front wheel, when a vehicle makes a turn, is different. Each wheel is following an independent path, and requires its own angle. Check the turning angle with a commercially available turning radius gage. If the vehicle's turning angle is not correct, adjust the angle by changing the length of the pitman arm stopper bolts located on the vehicle frame (Figure 3).

Following turning angle adjustment, check front toe adjustment. Refer to "Front Toe Adjustment" later in this section.

Adjust

1. Inside steering angle to 32.5 degrees.
2. Outside steering angle to 30.5 degrees.

Thrust Angle

Figure 4

The front wheels aim or steer the vehicle, but the rear wheels control tracking. This tracking action is relative to thrust angle and rear wheel toe. Thrust

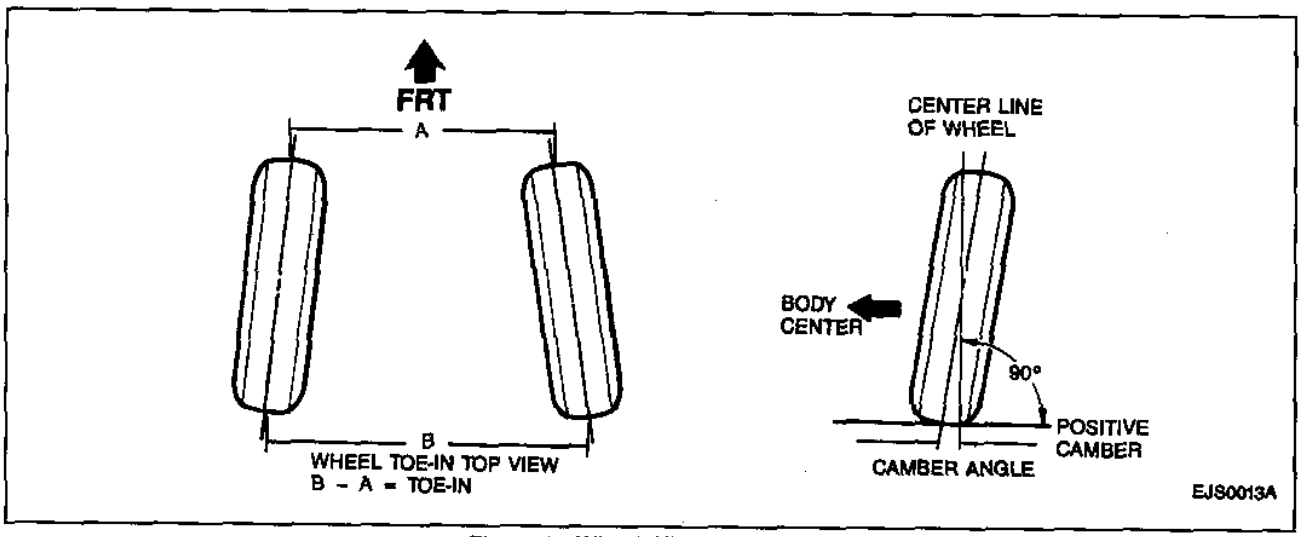

Figure 1—Wheel Alignment Angles

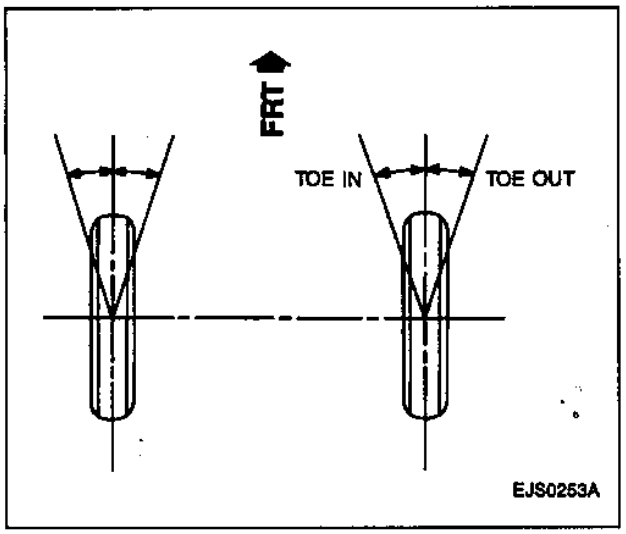

Figure 2—Toe

angle is defined as the path that the rear wheels take. Ideally, the thrust angle is geometrically aligned with the body centerline.

DIAGNOSIS

For steering and wheel alignment diagnosis procedures, refer to SECTION 3.

PRELIMINARY INSPECTIONS

Figure 5

Steering and vibration complaints are not always the result of improper alignment. They may also be caused by wheel and tire imbalance. An additional item to be checked, is the tire lead due to worn or defective tires. "Lead" is the deviation of the vehicle from a straight path on a level road without hand pressure on the steering wheel. For diagnostic information, refer to SECTION 3.

To ensure correct alignment readings and adjustments, the following inspections should be made before checking caster, camber or toe:

Inspect

Tools Required:
J 8001 Dial Indicator Set
J 26900-13 Magnetic Base

1. All tires for proper inflation pressures and approximately the same tread wear. Refer to SECTION 3E.
2. Wheel bearings for looseness. Refer to SECTION 3.
3. Ball joints and tie rod ends. If excessive looseness is noted, correct before adjusting. Refer to SECTION 3C and to SECTION 3.
4. Tie rods. If excessive looseness is noted, correct before adjusting.
5. Lateral runout of wheels and tires using a J 8001 and a J 26900-13.

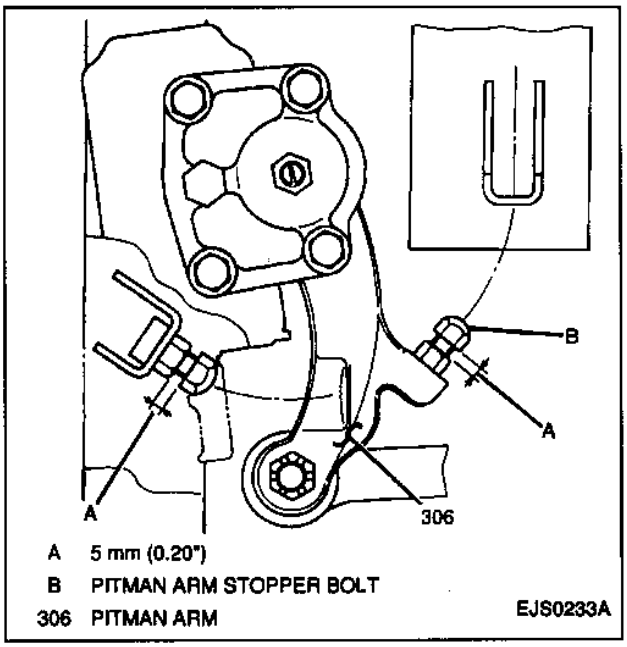

Figure 3—Steering Gear Pitman Arm

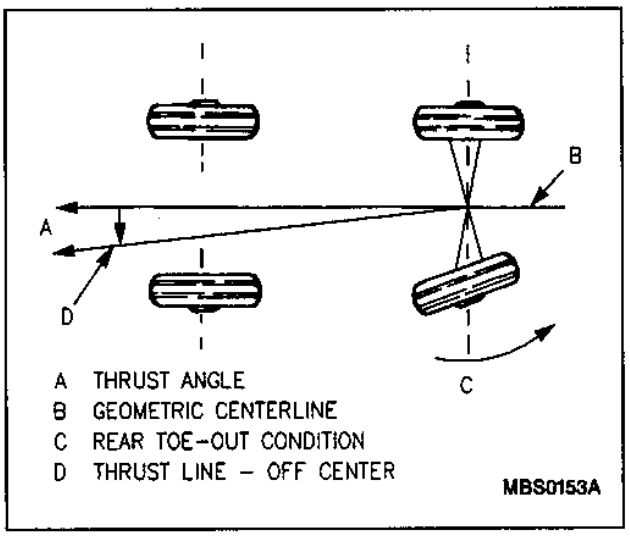

Figure 4—Thrust Angle

A. Raise front end of vehicle slightly off the ground. Refer to SECTION 0A.
B. Position the J 8001 and the J 26900-13 on the wheel (Figure 5).
C. Rotate wheel and measure lateral runout.
   - Allowable lateral wheel runout: 1.20 mm (0.047-inch) or less.

6. Vehicle trim heights. Refer to SECTION 3. If heights are beyond the limits and a correction is to be made, the correction must be made before adjusting toe.
7. Steering gear mountings. Refer to SECTION 3B2.
8. Operation of struts. Refer to SECTION 3C.
9. Control arms for looseness. Refer to SECTION 3C.
10. Hub and bearing assemblies for excessive wear; correct if necessary. Refer to SECTION 3.

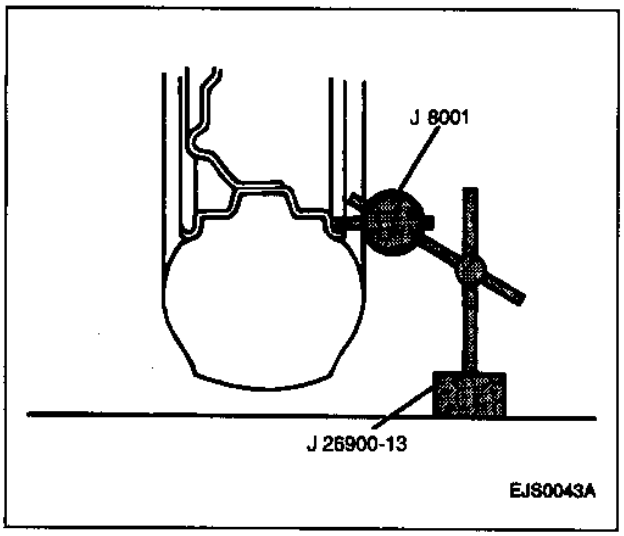

Figure 5—Checking Wheel Runout

Important

- Consideration must be given to excessive loads. If an excessive load is normally carried in the vehicle, it should remain in the vehicle during alignment checks.
- Consider the condition of the equipment being used to check alignment, and follow the manufacturer's instructions.
- Regardless of equipment used to check alignment, the vehicle must be on a level surface.

ON-VEHICLE SERVICE

MEASURING FRONT ALIGNMENT ANGLES

Important

- Install alignment equipment following equipment manufacturer's instructions. Measure alignment angles and record the readings.
- Jounce front and rear bumpers three times to normalize suspension prior to measuring angles.
- If caster angles are not within the specified range, inspect for damaged suspension and steering components and replace parts as necessary. Refer to SECTION 3C.

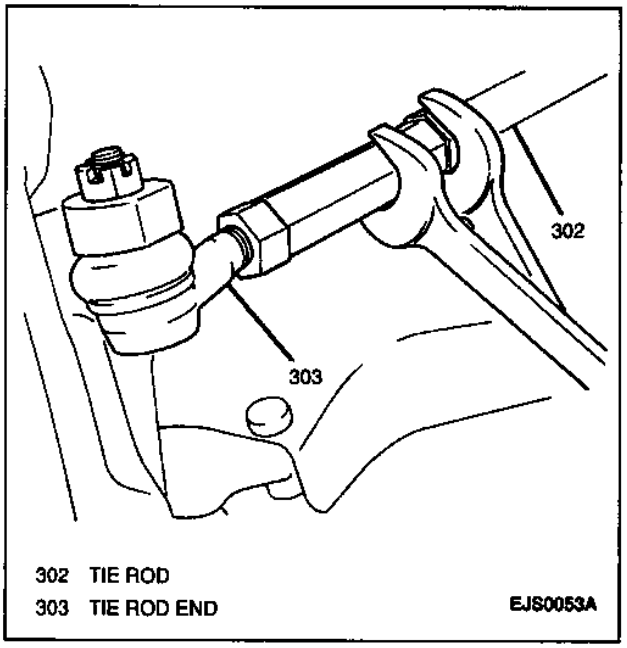

Figure 6—Adjusting Front Toe

Front Camber and Caster

Should camber or caster be found out of specifications upon inspection (camber - 0.5 to 1.5 degrees and caster 0.5 to 2.5 degrees) locate its cause first. If this cause lies in damaged, loose, bent, dented or worn suspension parts, those parts should be replaced, refer to SECTION 3C. If the problem lies in the body, repair it to attain specifications; refer to SECTION 10-3. To prevent possible incorrect reading of camber or caster, vehicle front end must be moved up and down a few times (jounced) before inspection. Camber and caster cannot be adjusted on this vehicle.

Front Toe

Figure 6

Toe is adjusted by loosening locknuts and then rotating right and left tie rods by the same amount to bring toe-in to 0.16 to 0.48 degrees (Figure 6). In this adjustment, right and left tie rods should become equal in length.

Tighten

- Tie rod locknuts to 65 N·m (48 lb. ft.).

SPECIFICATIONS

ALIGNMENT SPECIFICATIONS

Total Toe	0.16 to 0.48 Degrees
Camber	-0.5 to 1.5 Degrees
Caster	0.5 to 2.5 Degrees
Steering Angle:	
Inside	32.5 Degrees
Outside	30.5 Degrees
Allowable Lateral Wheel Runout	1.20 mm (0.047 in.)

FASTENER TORQUES

Tie Rod Locknuts	65 N.m (48 lb. ft.)

SPECIAL TOOLS

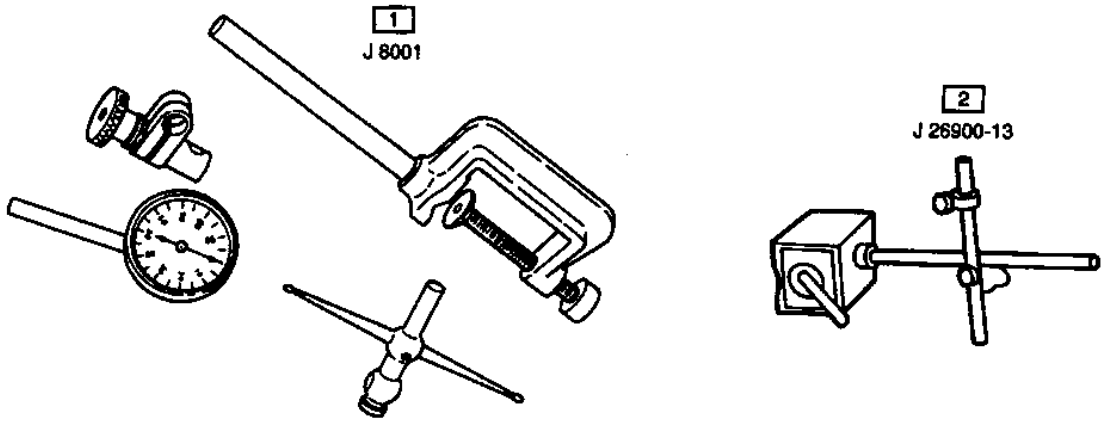

1 DIAL INDICATOR SET
2 MAGNETIC BASE

EJS0243A